V4 83170 Dual-current 831708 Part number 83170805

- Nominal ratings 0.1 A to 10 A / 250 VAC
- Minimum rating 1 mA / 4 VDC
- Operating temperature up to +125 °C
- Conforming to standards EN 61058 and UL 1054
- Choice of actuators with 2 possible fixing positions

Part numbers

	Type	Function	Connections
83170805	Dual-current 831708	I (changeover)	W7A5

Specifications

Electrical characteristics

Rating nominal / 250 VAC (A)	0,1
Rating thermal / 250 VAC (A)	6

Mechanical characteristics

Maximum operating force (N)	1,5
Min. Release force (N)	0,3
Maximum total travel force (N)	1,8
Max. permitted overtravel force (N)	10
Maximum rest position (mm)	9,2
Operating position (mm)	$8{,}4^{\pm 0{,}3}$
Max. differential travel mm	0,15
Min. overtravel (mm)	0,5
Ambient operating temperature (°C)	-20 →+125
Mechanical life (operations)	10^6
Contact gap (mm)	0,4
Weight (g)	1,7

Additional specifications

Components
Material
- Case : polyester UL 94 VO
- Button : Glass-filled polyamide
- Contacts : AgNi, gold-plated AgNi (dual-current)
- Terminals : cupro-nickel (except W7A5 in brass)

Levers
- Flat : stainless steel
- Roller : stainless steel, polyamide roller

Approvals
NF - UL - cUL

Principles

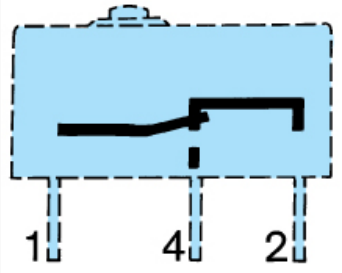

Dimensions (mm)

Product

83170
Asymmetrical version

Unless otherwise specified, the characteristics given are applicable to all or part of the product range selected

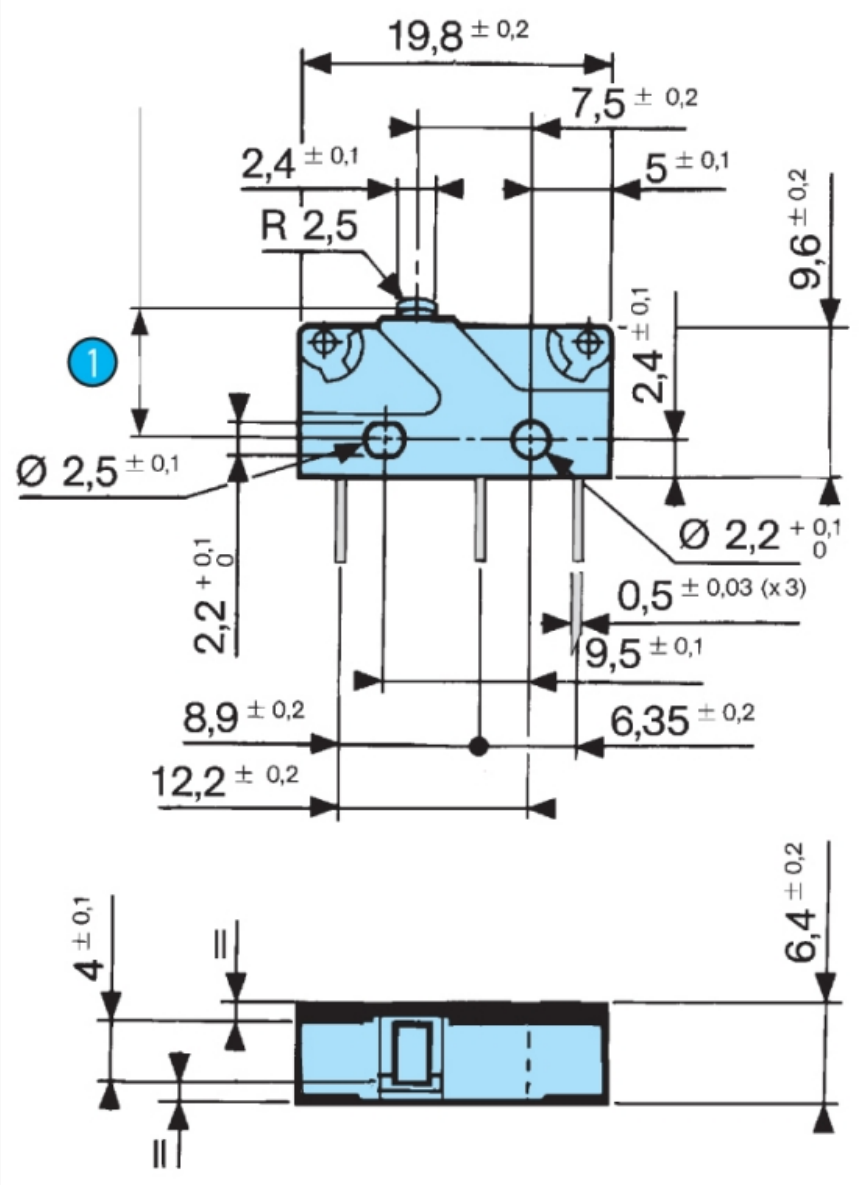

Nº	Legend
1	OL = 7.6

Dimensions (mm)

Product

83170 Symmetrical version

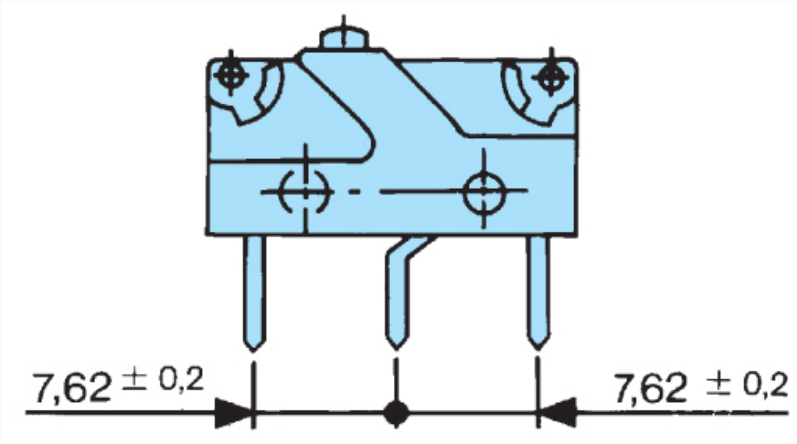

Dimensions (mm)

Connections

W2

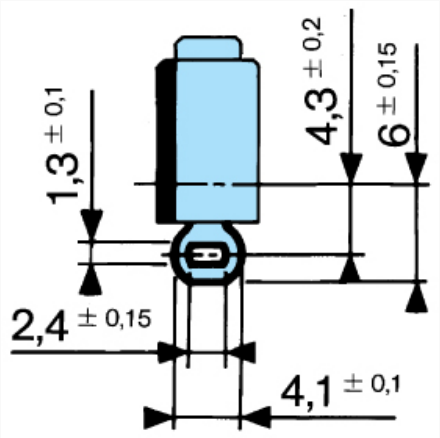

Dimensions (mm)

Connections

W7A5

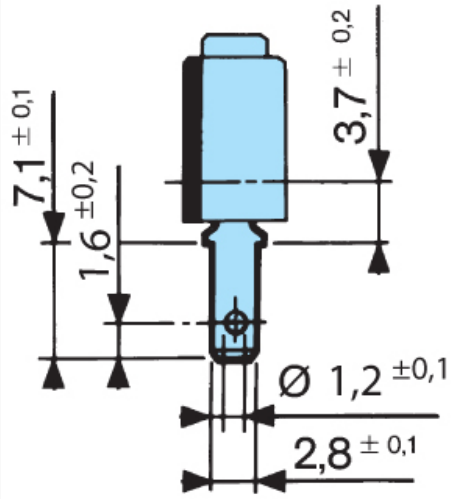

Dimensions (mm)

Connections

X1 - X1S

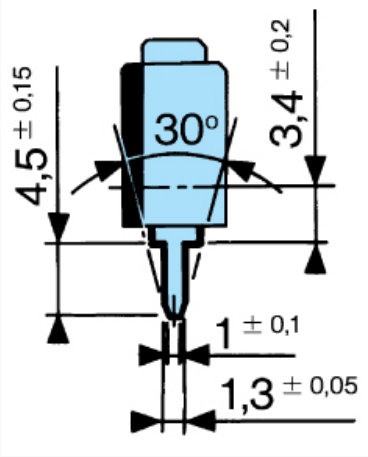

Dimensions (mm)

Connections

X2 - X2S

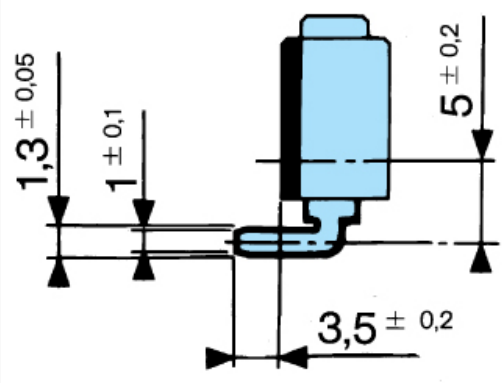

Dimensions (mm)

Connections

X3 - X3S

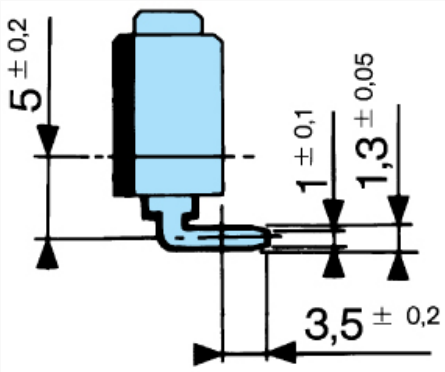

Dimensions (mm)

Drilling

Printed circuit board mounting
Asymmetrical X1 - X2 - X3

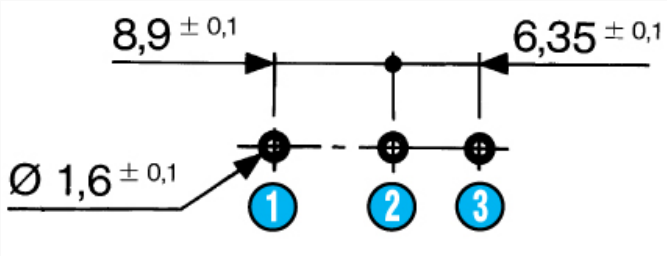

Nº	Legend
1	1.C
2	4.NO
3	2.NC

Dimensions (mm)

Drilling

Printed circuit board mounting
Symmetrical X1S - X2S - X3S

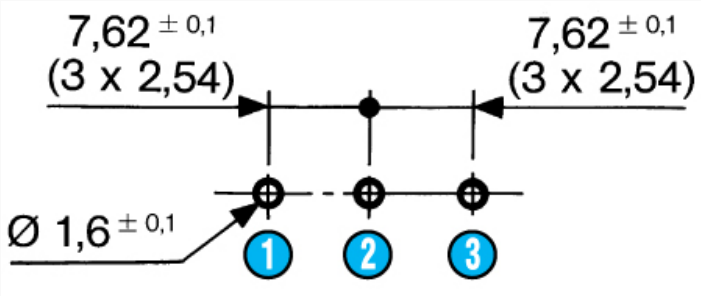

Nº	Legend
1	1.C
2	4.NO
3	2.NC

Dimensions (mm)

Drilling

Mounting on a printed circuit board with fixing pins
Asymmetrical

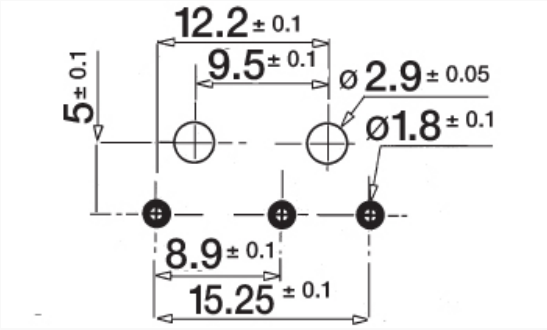

Dimensions (mm)

Drilling

Mounting on a printed circuit board with fixing pins
Symmetrical

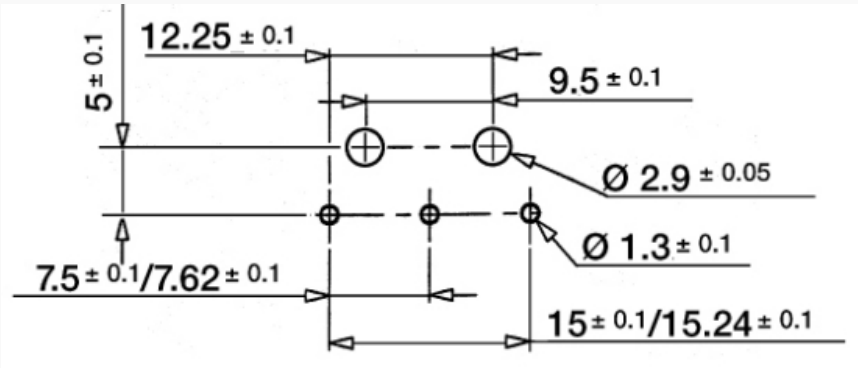

Dimensions (mm)

Actuator mounting positions

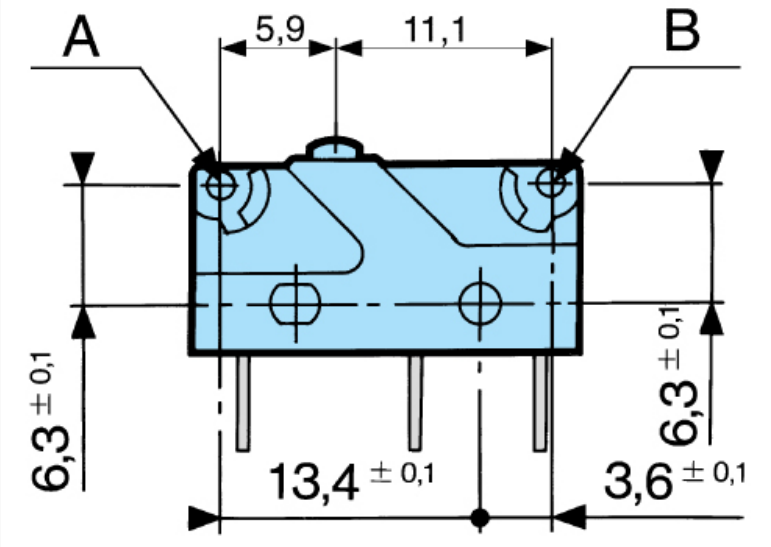

Fixing position Except where otherwise indicated, levers are supplied unmounted. For factory mounting, specify fixing position A or B. To calculate force : divide the switch force by the coefficient in the table. To calculate travel : multiply the switch travel by the same coefficient.

Dimensions (mm)

Actuators

170A

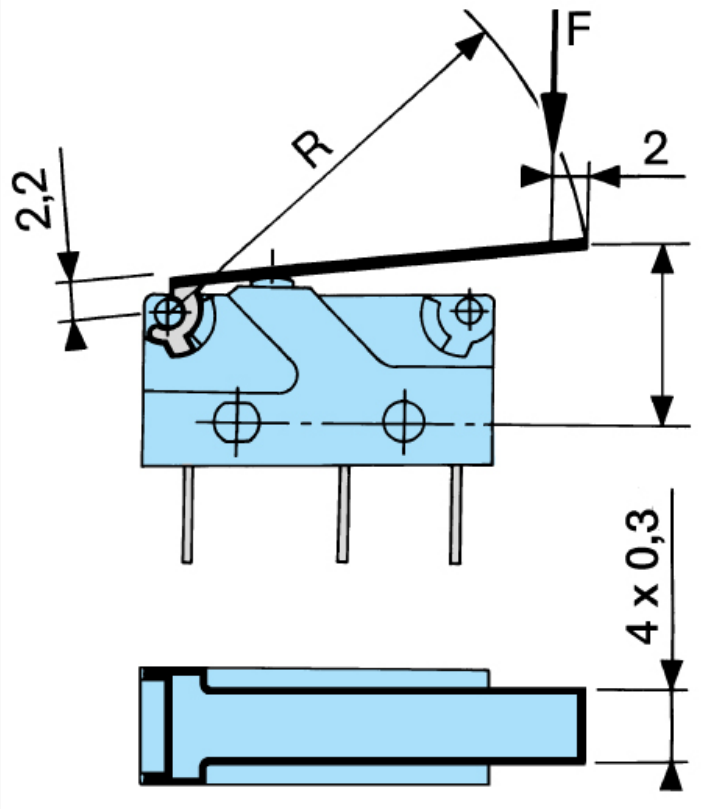

Fixing position Except where otherwise indicated, levers are supplied unmounted. For factory mounting, specify fixing position A or B. To calculate force : divide the switch force by the coefficient in the table. To calculate travel : multiply the switch travel by the same coefficient.

Dimensions (mm)

Actuators

170E

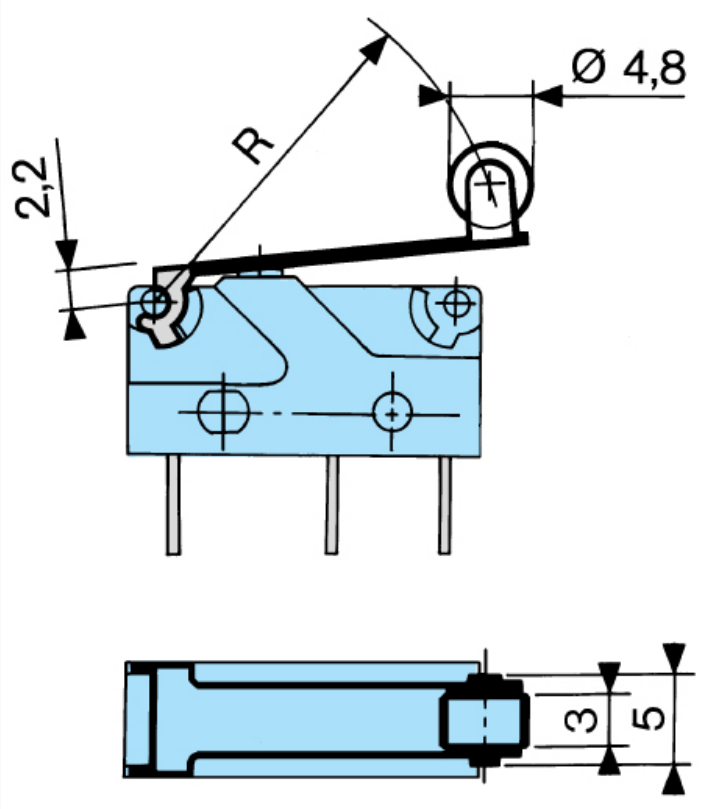

Fixing position Except where otherwise indicated, levers are supplied unmounted. For factory mounting, specify fixing position A or B. To calculate force : divide the switch force by the coefficient in the table. To calculate travel : multiply the switch travel by the same coefficient.

Dimensions (mm)

Actuators

170F

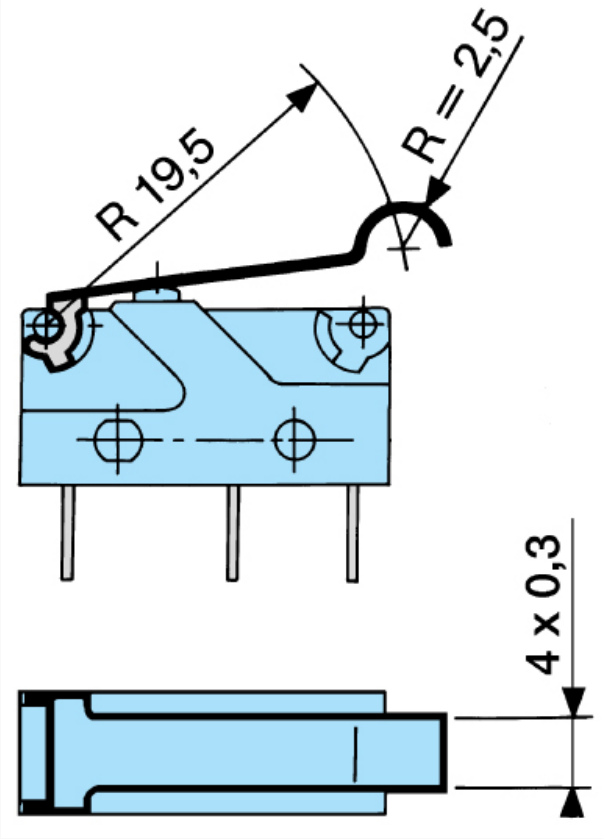

Fixing position Except where otherwise indicated, levers are supplied unmounted. For factory mounting, specify fixing position A or B. To calculate force : divide the switch force by the coefficient in the table. To calculate travel : multiply the switch travel by the same coefficient.

Dimensions (mm)

Actuators

Fixing pins

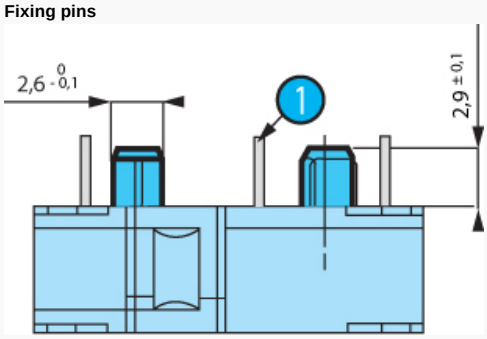

Fixing position Except where otherwise indicated, levers are supplied unmounted. For factory mounting, specify fixing position A or B. To calculate force : divide the switch force by the coefficient in the table. To calculate travel : multiply the switch travel by the same coefficient.

Nº	Legend
1	Output on unit side : X2

Dimensions (mm)

Actuators

Fixing pins

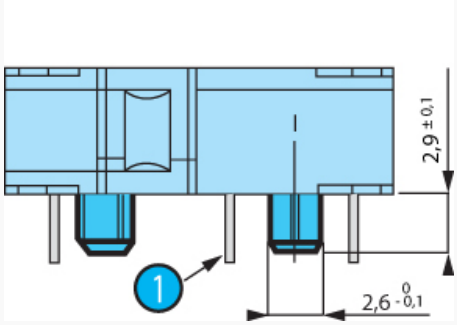

Fixing position Except where otherwise indicated, levers are supplied unmounted. For factory mounting, specify fixing position A or B. To calculate force : divide the switch force by the coefficient in the table. To calculate travel : multiply the switch travel by the same coefficient.

Nº	Legend
1	Output on cover side : X3

Curves

Operating curve for types 831708 / 831709

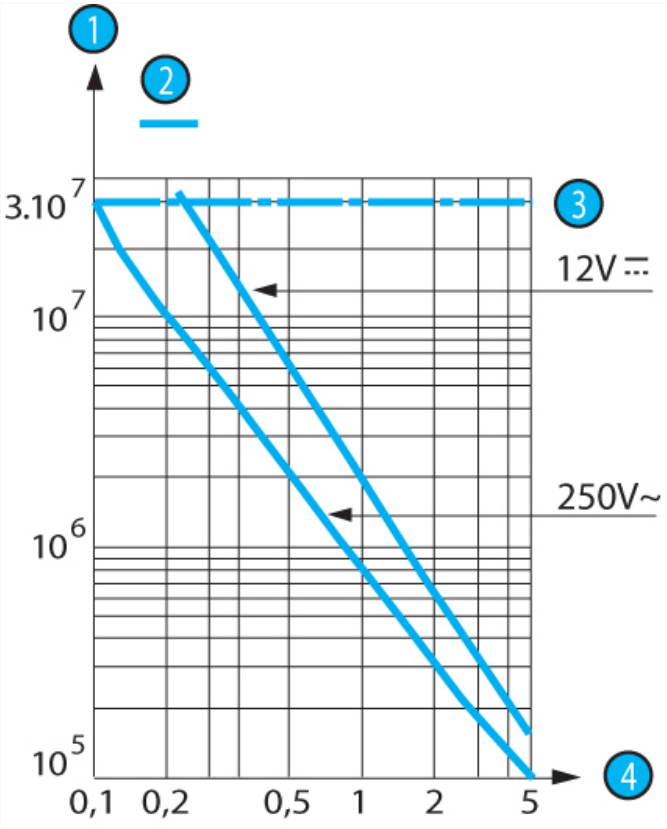

Models 831708 and 831709 are designed to operate equally well on dual-current (1 mA 4 V minimum) or medium-current (5 A maximum) circuits. However, a given product should only be used to switch one type of circuit during its working life.

Nº	Legend
1	Number of cycles
2	Resistive circuit
3	Mechanical life limit
4	Current in Amps

Connections

Actuators and fixing positions

Part numbers for standard actuators	79253327		79253326		79253328		79218454		79253329	
Actuators	Flat 170A R18.3		Flat 170A R24		Flat 170A R41		Roller 170E R20		Dummy roller 170F	
Fixing positions										
Coefficient	A	B	A	B	A	B	A	B	A	B
Tripping point	3	1.5	4	2	7	3.5	3	1.5	3	1.5
	10 ±1.4	9.2 ±0.9	10.7 ±1.2	9.6 ±1	12.7 ±1	10.6 ±1.8	15.5 ±1.4	14.5 ±0.9	12.9 ±1.3	11.9 ±1.1
Levers	Screw 170D		Transverse roller 170EL							

Characteristics available on request

Other information

Mounting - Operation
See basic technical concepts

Product adaptations

- Special levers
- Special connections

Unless otherwise specified, the characteristics given are applicable to all or part of the product range selected

ООО «ЛайфЭлектроникс» “LifeElectronics” LLC

ИНН 7805602321 КПП 780501001 Р/С 40702810122510004610 ФАКБ "АБСОЛЮТ БАНК" (ЗАО) в г.Санкт-Петербурге К/С 30101810900000000703 БИК 044030703

Компания «Life Electronics» занимается поставками электронных компонентов импортного и отечественного производства от производителей и со складов крупных дистрибьюторов Европы, Америки и Азии.

С конца 2013 года компания активно расширяет линейку поставок компонентов по направлению коаксиальный кабель, кварцевые генераторы и конденсаторы (керамические, пленочные, электролитические), за счёт заключения дистрибьюторских договоров

Мы предлагаем:

- *Конкурентоспособные цены и скидки постоянным клиентам.*
- *Специальные условия для постоянных клиентов.*
- *Подбор аналогов.*
- *Поставку компонентов в любых объемах, удовлетворяющих вашим потребностям.*

- *Приемлемые сроки поставки, возможна ускоренная поставка.*
- *Доставку товара в любую точку России и стран СНГ.*
- *Комплексную поставку.*
- *Работу по проектам и поставку образцов.*
- *Формирование склада под заказчика.*

- *Сертификаты соответствия на поставляемую продукцию (по желанию клиента).*
- *Тестирование поставляемой продукции.*
- *Поставку компонентов, требующих военную и космическую приемку.*
- *Входной контроль качества.*
- *Наличие сертификата ISO.*

В составе нашей компании организован Конструкторский отдел, призванный помогать разработчикам, и инженерам.

Конструкторский отдел помогает осуществить:

- *Регистрацию проекта у производителя компонентов.*
- *Техническую поддержку проекта.*
- *Защиту от снятия компонента с производства.*
- *Оценку стоимости проекта по компонентам.*
- *Изготовление тестовой платы монтаж и пусконаладочные работы.*

Тел: +7 (812) 336 43 04 (многоканальный)
Email: org@lifeelectronics.ru

www.lifeelectronics.ru