HARTING Industrial Connectors Han®

Industrial Connectors – Overview of the series

Contents | Chapter

Industrial Connectors | Technical characteristics	**00**
Han A® | Slim Construction Size (up to 16 amperes)	**01**
Han D® / DD® | up to 216 contacts	**02**
Han E® / Han® ES/ESS/EE/EEE | for 16 amperes	**03**
Han Hv E® / Han® Hv ES | for higher voltages	**04**
Han-Com® | Combination Connectors	**05**
Han-Modular® | modular connectors	**06**
Han® HsB | for higher currents	**07**
Han® AV | Terminal Block Connectors	**08**
Staf® | for low voltages	**09**
Han-Snap® | for the use in switch cabinets	**11**
Han-Port® | Interface for power and signals	**12**
Han® Q | compact connectors	**13**
Han® HC-Modular/Individual | High Current Connectors	**14**
Han-Power® | Energy Bus Components	**15**
Han® HMC | for High Mating Cycles	**16**
Han® High Temp | for high temperatures	**17**
Han-Brid® | Industrial Bus Interface	**19**
Han® PCB termination	**20**
Han-*Yellock*®	**25**
Han-Eco®	**29**
Han® Hoods and Housings | with metric thread	**31**
Han® Thermocouple	**41**
Han® GND	**42**
Accessories	**80**
Tools	**90**

Economic and Reliable
Connections

Specifications

DIN EN 60 664-1 (VDE 0110-1)
Principles,
requirements and tests

DIN EN 61 984 (VDE 0627)
Connectors,
Safety requirements and tests

Note:

The connectors included in this catalogue should not be coupled or decoupled under electrical load unless otherwise stated.

The connector must not be powered-up in the un-mated condition. This is also true if the connector is closed with a protection cover, unless otherwise stated.

The provision of protection against electric shock is the responsibility of the user. Protection can be achieved by the use of HARTING hoods and housings coupled with/or alternatively appropriate installation methods provided by the user.

The female connector in a HARTING hood or housing offers finger safe protection according to relevant standards for the mating face, even in the unmated condition, unless otherwise stated.

Connectors of the same or different series being mounted side by side may be protected against incorrect mating by the use of coding options.

Standard

DIN EN 175 301-801

Approvals

UL File No. E 23 50 76 (www.ul.com)

CSA File No. LR 18 753, SEV
for inserts

GL certificate No. 13 674 - 99 HH

Certified according to EN ISO 9001
in design/development, production,
installation and servicing

Terminations

- Screw terminal
- Crimp terminal
- Cage-clamp terminal
- Wrap terminal
- Solder terminal
- Axial-screw terminal
- Rapid terminal
- IDC termination

Inserts

- Leading protective ground
- Polarised for correct mating
- Interchangeability of male and female inserts in hoods and housings
- Captive fixing screws
- Can be used with hoods and housings, or for rack and panel applications

Hoods/Housings

- Standard Hoods/Housings
- Hoods/Housings for harsh environmental requirements
- Hoods/Housings for intrinsically safe plant
- Degree of protection IP 65
- Electrical connection with protective ground
- High mechanical strength and vibration-resistance ensured by locking levers
- Spring-loaded covers in shockproof thermoplastic or metal covers, both lockable

Accessories

- Extensive range of cable protection and sealing accessories
- Protective covers available
- Coding options for incorrect mating protection

For "non standard applications" we can manufacture designs to match your
requirements.
Please discuss requirements with us.

HARTING components help you to construct top quality products – economically and in line with market requirements.

General information

It is the customer's responsibility to check whether the components illustrated in this catalogue also comply with different regulations from those stated in special fields of applications.

We reserve the right to modify designs or substance of content in order to improve quality, keep pace with technological advancement or meet particular requirements in production.

No part of this catalogue may be reproduced in any form (print, photocopy, microfilm or any other process) or processed, duplicated or distributed by means of electronic systems without the prior written consent of HARTING Electric GmbH & Co. KG, Espelkamp. We are bound by the German version only.

© HARTING Electric GmbH & Co. KG, Espelkamp – All rights reserved, including those of the translation.

Transforming customer wishes into concrete solutions

The HARTING Technology Group is skilled in the fields of electrical, electronic and optical connection, transmission and networking, as well as in manufacturing, mechatronics and software creation. The Group uses these skills to develop customized solutions and products such as connectors for energy and data transmission applications including, for example, mechanical engineering, rail technology, wind energy plants, factory automation and the telecommunications sector. In addition, HARTING also produces electro-magnetic components for the automobile industry and offers solutions in the field of Enclosures and Shop Systems.
The HARTING Group currently comprises 51 sales companies and production plants worldwide employing a total of about 4,200 staff.

HARTING Subsidiary company HARTING Representatives

We aspire to top performance.

Connectors ensure functionality. As core elements of electrical and optical wiring, connection and infrastructure technologies, they are essential in enabling the modular construction of devices, machines and systems across a very wide range of industrial applications. Their reliability is a crucial factor guaranteeing smooth functioning in the manufacturing area, in telecommunications, applications in medical technology – in fact, connectors are at work in virtually every conceivable application area. Thanks to the consistent further development of our technologies, customers enjoy investment security and benefit from durable, long term functionality.

Always at hand, wherever our customers may be.

Increasing industrialization is creating growing markets characterized by widely diverging demands and requirements. The search for perfection, increasingly efficient processes and reliable technologies is a common factor in all sectors across the globe.

HARTING is providing these technologies – in Europe, America and Asia. The HARTING professionals at our international subsidiaries engage in close, partnership based interaction with our customers, right from the very early product development phases, in order to realize customer demands and requirements in the best possible manner.

Our people on location form the interface to the centrally coordinated development and production departments. In this way, our customers can rely on consistently high, superior product quality – worldwide.

Our claim: pushing performance.

HARTING provides more than optimally attuned components. In order to serve our customers with the best possible solutions, HARTING is able to contribute a great deal more and play a closely integrative role in the value creation process.

From ready assembled cables through to control racks or ready-to-go control desks: Our aim is to generate the maximum benefits for our customers – without compromise!

Quality creates reliability – and warrants trust.

The HARTING brand stands for superior quality and reliability – worldwide. The standards we set are the result of consistent, stringent quality management that is subject to regular certifications and audits.

EN ISO 9001, the EU Eco-Audit and ISO 14001 are key elements here. We take a proactive stance towards new requirements, which is why HARTING is the first company worldwide to have obtained the IRIS quality certificate for rail vehicles.

HARTING technology creates added value for customers.
Technologies by HARTING are at work worldwide. HARTING's presence stands for smoothly functioning systems, powered by intelligent connectors, smart infrastructure solutions and mature network systems. In the course of many years of close, trust-based cooperation with its customers, the HARTING Technology Group has advanced to one of the worldwide leading specialists for connector technology. Extending beyond the basic functionalities demanded, we offer individual customers specific and innovative solutions. These tailored solutions deliver sustained effects, provide investment security and enable customers to achieve strong added value.

Opting for HARTING opens up an innovative, complex world of concepts and ideas.
In order to develop connectivity and network solutions serving an exceptionally wide range of connector applications and task scopes in a professional and cost optimized manner, HARTING not only commands the full array of conventional tools and basic technologies. Over and beyond these capabilities, HARTING is constantly harnessing and refining its broad base of knowledge and experience to create new solutions that ensure continuity at the same time. In securing this know-how lead, HARTING draws on a wealth of sources from both in-house research and the world of applications alike.
Salient examples of these sources of innovative knowledge include microstructure technologies, 3D design and construction technology, as well as high temperature or ultrahigh frequency applications that are finding use in telecommunications or automation networks, in the automotive industry, or in industrial sensor and actuator applications, RFID and wireless technologies, in addition to packaging and housing made of plastics, aluminum or stainless steel.

HARTING solutions extend across technology boundaries.
Drawing on the comprehensive resources of the group's technology pool, HARTING devises practical solutions for its customers. Whether this involves industrial networks for manufacturing automation, or hybrid interface solutions for wireless telecommunication infrastructures, 3D circuit carriers with microstructures, or cable assemblies for high-temperature applications in the automotive industry – HARTING technologies offer far more than components, and represent mature, comprehensive solutions attuned to individual customer requirements and wishes. The range covers ready-to-use cable configurations, completely assembled backplanes and board system carriers, as well as fully wired and tested control panels.
In order to ensure the future proof design of RF- and EMC-compatible interface solutions, the central HARTING laboratory (certified to EN 45001) provides simulation tools, as well as experimental, testing and diagnostics facilities all the way through to scanning electron microscopes. In the selection of materials and processes, lifecycle and environmental aspects play a key role, in addition to product and process capability considerations.

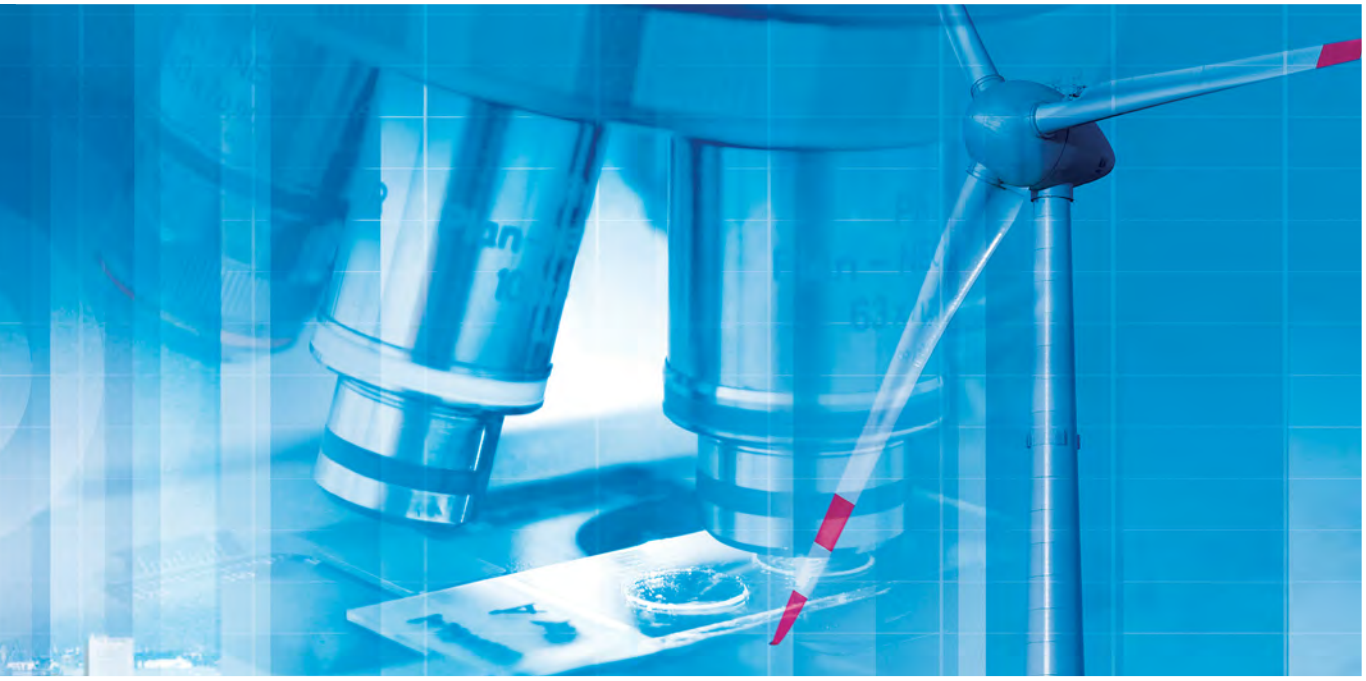

HARTING knowledge is practical know-how generating synergy effects.

HARTING commands decades of experience with regard to the applications conditions of connectors in telecommunications, computer and network technologies and medical technologies, as well as industrial automation technologies, such as the mechanical engineering and plant engineering areas, in addition to the power generation industry or the transportation sector. HARTING is highly conversant with the specific application areas in all of these technology fields.

The key focus is on applications in every solution approach. In this context, uncompromising, superior quality is our hallmark. Every new solution found will invariably flow back into the HARTING technology pool, thereby enriching our resources. And every new solution we go on to create will draw on this wealth of resources in order to optimize each and every individual solution. In this way, HARTING is synergy in action.

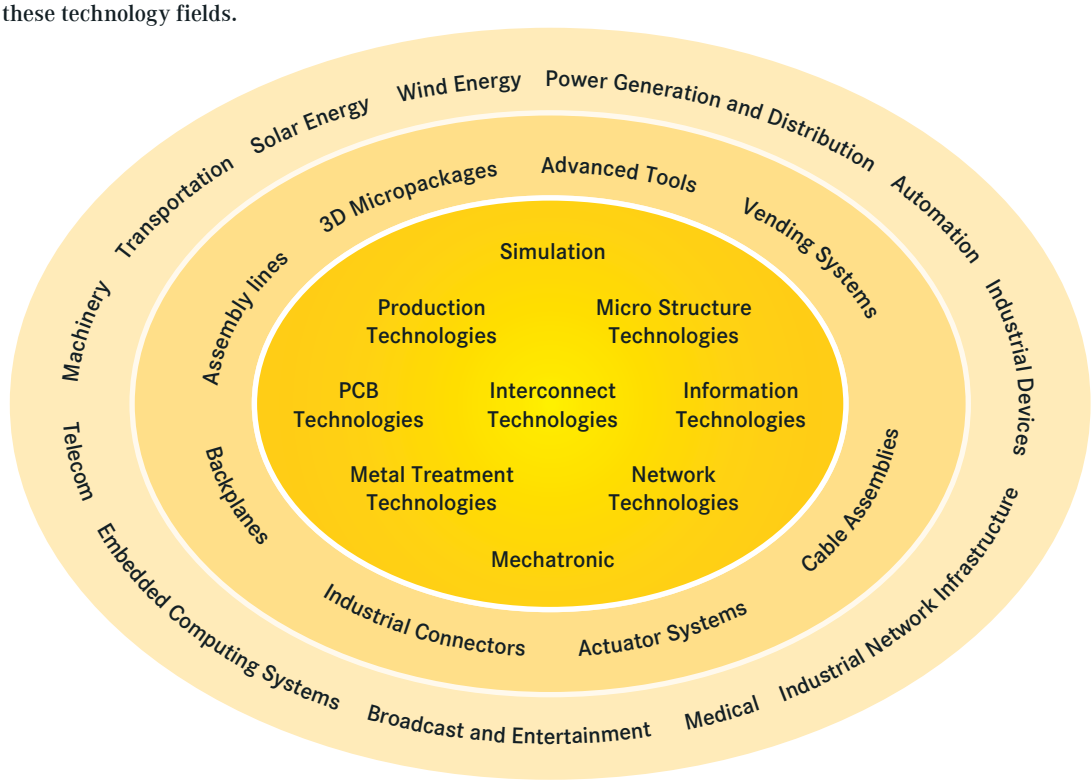

HARTING eCatalogue

The **HARTING eCatalogue / eShop** can be found on our homepage at **www.HARTING.com** or at the direct link **www.eCatalogue.HARTING.com**.

The HARTING e-Catalogue is your platform for conveniently selecting individual products as well as configuring complete solutions. Our comprehensive product pages provide you with all necessary technical information and CAD files in various formats for downloading. You may also contact our technical sales department directly.

Find out about **product innovations and news** on the start page of the HARTING e-Catalogue or go directly to **www.product-news.HARTING.com**.

Registered users can take advantage of MyHARTING to check on availability or prices, and to place or track their orders. Here, your customized „HARTING history“ provides you with a list of your inquiries, quotations and more.

Sign up now for your free e-Catalogue account at HARTING!

www.eShop.HARTING.com

Contents | Page

Summary Han®-sizes	**00.2**
How to order connectors	**00.4**
Hoods/housings connector insert protection	**00.5**
Type of hoods/housings	**00.6**
Locking systems	**00.8**
Connection technology	**00.9**
Electrical engineering data	**00.18**
Current carrying capacity	**00.21**
Cross Reference from Pg thread to metric cable thread	**00.23**
Declaration of Conformity	**00.24**

Summary Han®-sizes

Size	Description
A	Hood side-entry; Hood top-entry
3	230/400 V, 10 A, Han® 3 A / 4 A, chapter 01 — 3 / 4 + ⏚ 50 V, 10 A, Staf 6, chapter 09 — 6 250 V, 10 A, Han® 7 D, chapter 02 — 7 + ⏚ 50 V, 10 A, Han® 8 D, chapter 02 — 8 230/400 V, 16 A, Han® Q 5/0, chapter 13 — 5 + ⏚ 400 V, 10 A, Han® Q 7/0, chapter 13 — 7 + ⏚ 50 V, 10 A, Han-Brid®, chapter 19 — 4 + 2 Housing screw mounting; Housing bulkhead mounting; Housing surface mounting; Housing bulkhead mounting; Hood cable to cable coupling
10	Hood top-entry; Hood side-entry 250 V, 16 A, Han A®, chapter 01 — 10 + ⏚ 250 V, 10 A, Han D®, chapter 02 — 15 + ⏚ 50 V, 10 A, Staf®, chapter 09 — 14 50 V – 1000 V, 5 A – 70 A, Han-Modular®, chapter 06
16	16 + ⏚ 25 + ⏚ 20 1 module
	Housing bulkhead mounting; Housing surface mounting; Hood cable to cable coupling
32	suitable for 2 inserts of size 16 A

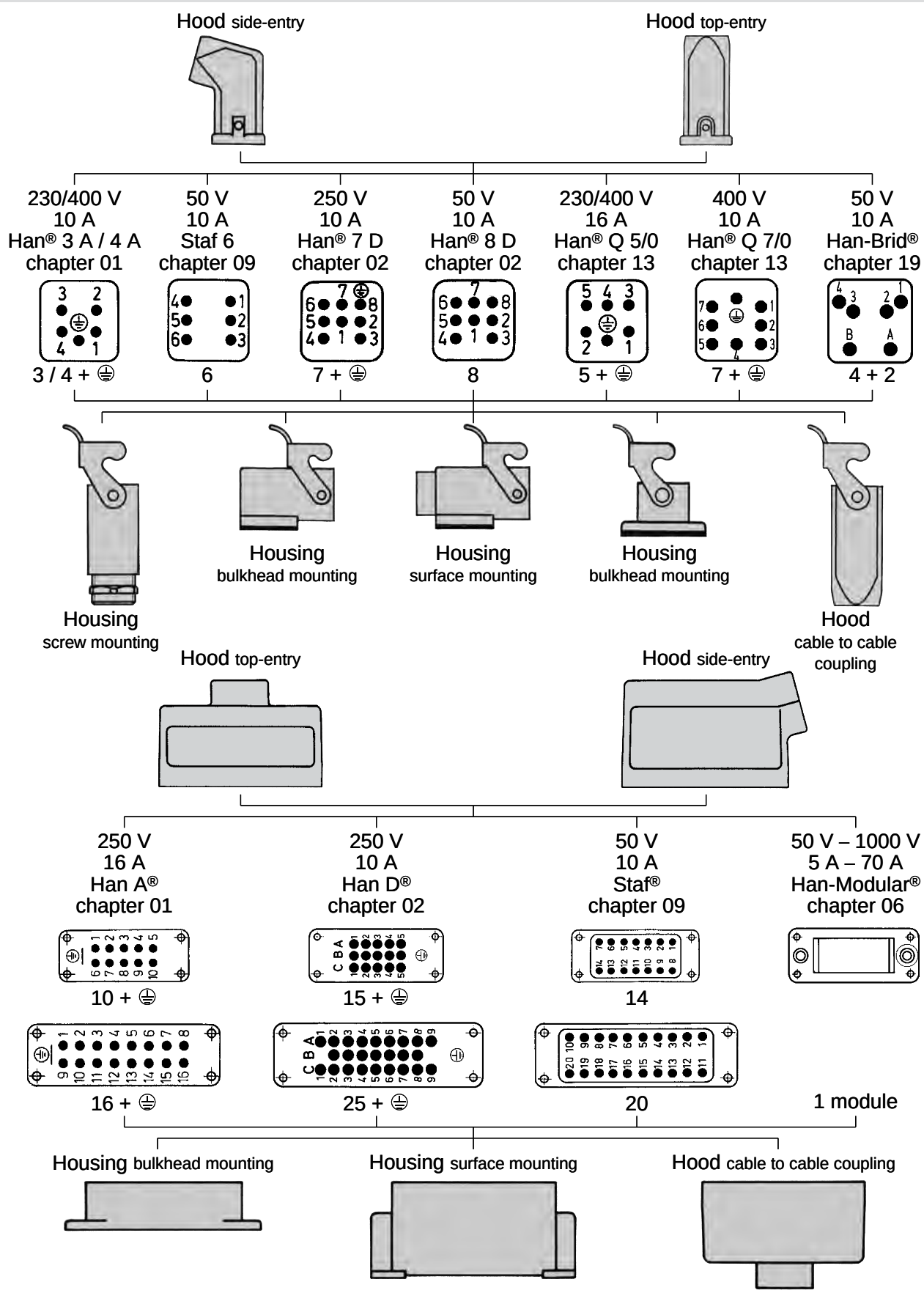

Summary Han®-sizes

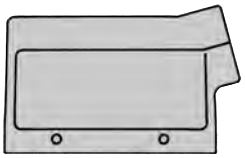

Hood side-entry

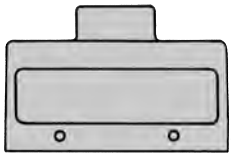

Hood top-entry

Size	250 V 10 A Han D® chapter 02	250 V 10 A Han DD® chapter 02	500 V 16 A Han E® Han® ES chapter 03	500 V 16 A Han® EE Han® EEE chapter 03	400/690 V 35 A Han® HsB chapter 07	830 V 16 A Han Hv E® Han® Hv ES chapter 04	160 V – 690 V 10 A – 100 A Han-Com® chapter 05	50 V – 5000 V 5 A – 200 A Han-Modular® chapter 06
B								
6		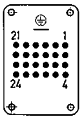 24 + ⏚	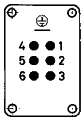 6 + ⏚	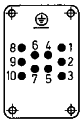 10 + ⏚				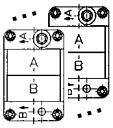 2 modules
10		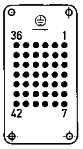 42 + ⏚	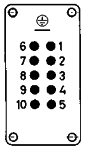 10 + ⏚	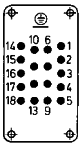 18 + ⏚		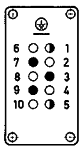 3 + ⏚	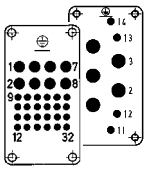 4/4 + ⏚ 8/24 + ⏚	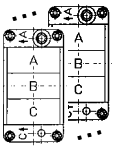 3 modules
16	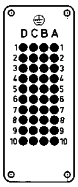 40 + ⏚	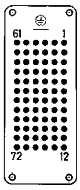 72 + ⏚	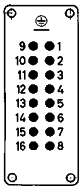 16 + ⏚	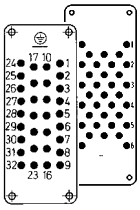 40 + ⏚ 32 + ⏚	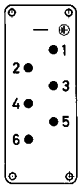 6 + ⏚	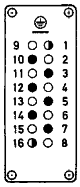 6 + ⏚	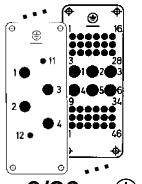 6/36 + ⏚ 4/2 + ⏚	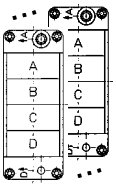 4 modules
24	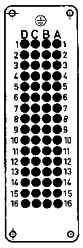 64 + ⏚	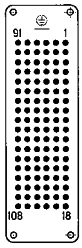 108 + ⏚	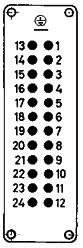 24 + ⏚	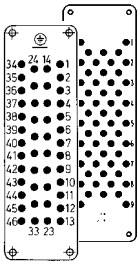 64 + ⏚ 46 + ⏚		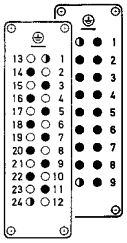 16 + ⏚ 10 + ⏚	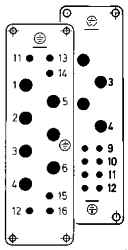 4/8 + ⏚ 6/6 + ⏚	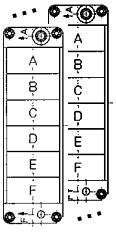 6 modules

Housing surface mounting

Housing bulkhead mounting

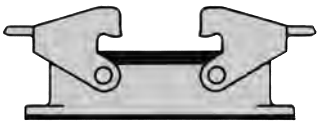

Hood cable to cable coupling

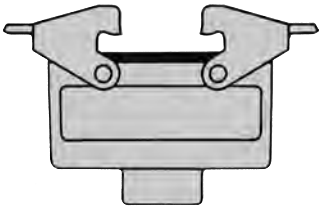

32 suitable for 2 inserts of size 16 B

48 suitable for 2 inserts of size 24 B

How to order connectors

For a complete connector components may be ordered from the following sub headings

Cable entry protection

Universal cable glands

Special cable clamp with strain relief, bell mouthed cable fitting and anti-twist devices

Cable gland with normal or multiple seal

Extensive range of accessories

Hoods

low or high construction
top or side cable entry
1 or 2 locking levers

Male insert with

screw terminal or
crimp terminal (order contacts separately)
or cage-clamp terminal

Female insert with

screw terminal or
crimp terminal (order contacts separately)
or cage-clamp terminal

Housings

Housing (bulkhead mounting)
with or without thermoplastic
or metal covers
1 or 2 locking levers

Housing (surface mounting)
low or high construction
with or without thermoplastic
or metal covers
1 or 2 locking levers
1 or 2 cable entries

Hood (cable to cable)
low or high construction
for cable to cable connections

Accessories

Protective covers available

Code and guide pins for coding

Special insert fixing screws for use without hoods and housings

Label according to CSA-approval

Suitable hoods and housings will be found on the same page.

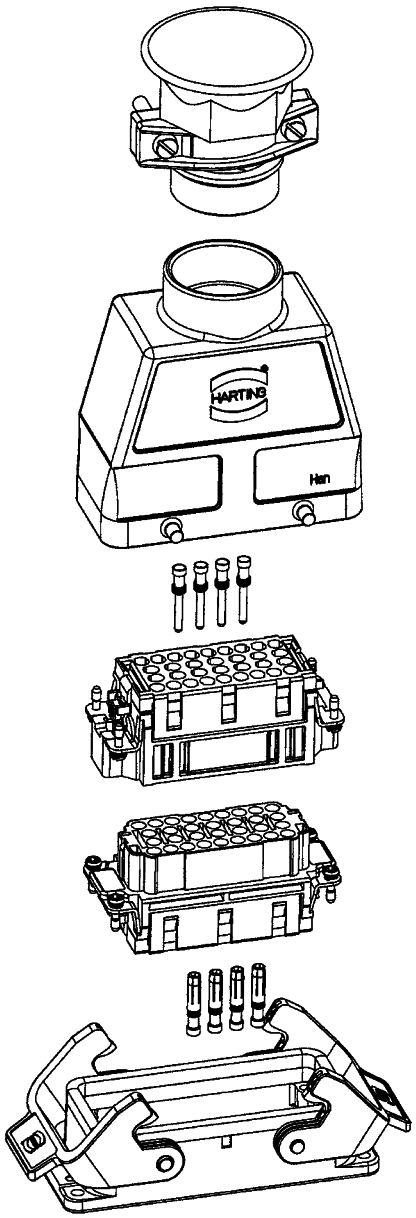

Part number explanation

Our computerized ordering system uses the following code:

09	33	024	2601
Product-group (connectors)	Series (i. e. Han E®)	Number of contacts (i. e. 6, 10, 16, 24)	Part of connector assembly (hoods/housings, inserts)

Hoods/housings connector insert protection

The connector's housing, sealing and locking mechanism protect the connection from external influences such as mechanical shocks, foreign bodies, humidity, dust, water or other fluids such as cleansing and cooling agents, oils, etc. The degree of protection the housing offers is explained in the IEC 60529, DIN EN 60 529, standards that categorize enclosures according to foreign body and water protection.

The following table shows the different degrees of protection.

Code letters (International Protection)	First Index Figure (Foreign bodies protection)	Second Index Figure (Water protection)
IP	6	5

Index figure	Degree of protection			Index figure	Degree of protection		
0	No protection		No protection against accidental contact, no protection against solid foreign bodies	0	No protection against water		No protection against water
1	Protection against large foreign bodies		Protection against contact with any large area by hand and against large solid foreign bodies with Ø > 50 mm	1	Drip-proof		Protection against vertical water drips
2	Protection against medium sized foreign bodies	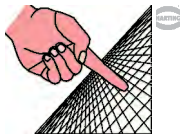	Protection against contact with the fingers, protection against solid foreign bodies with Ø > 12 mm	2	Drip-proof		Protection against water drips (up to a 15° angle)
3	Protection against small solid foreign bodies	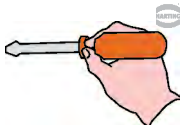	Protection against tools, wires or similar objects with Ø > 2.5 mm, protection against small foreign solid bodies with Ø > 2.5 mm	3	Spray-proof		Protection against diagonal water drips (up to a 60° angle)
4	Protection against grain-shaped foreign bodies		As 3 however Ø > 1 mm	4	Splash-proof		Protection against splashed water from all directions
5	Protection against injurious deposits of dust		Full protection against contact. Protection against interior injurious dust deposits	5	Hose-proof		Protection against water (out of a nozzle) from all directions
6	Protection against ingress of dust		Total protection against contact. Protection against penetration of dust	6	Strong hose-proof		Protection against strong water (out of a nozzle) from all directions
				7	Protected against immersion		Protected against temporary immersion
				8	Water-tight	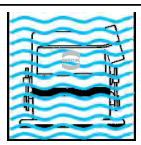	Protected against water pressure
				9k *	Protected against high-pressure		Protected against water from high-pressure / steam jet cleaners

Description according to IEC 60529
* ... IP 9k is not part of IEC 60529

Type of hoods/housings

Standard Hoods/Housings

Field of application	for excellent mechanical and electrical protection in demanding environments, for example, in the automobile and mechanical engineering industries also for process and regulation control applications
Distinguishing feature	hoods/housings colour-coded grey (RAL 7037)
Material of hoods/housings	Die cast light alloy
Locking levers	Han-Easy Lock®
Cable entry protection	Optional special cable clamp for hoods with strain relief, bell mouthed cable fitting and anti-twist devices

Han® M Hoods/Housings for harsh environmental requirements

Field of application	for all applications where aggressive environmental conditions and extreme climatic atmospheres are encountered
Distinguishing feature	hoods/housings colour-coded black (RAL 9005)
Material of hoods/housings	Die cast light alloy, corrosion resistant
Locking levers	Corrosion resistant stainless steel
Cable entry protection	Special cable clamp for hoods with strain relief, bell mouthed cable fitting and anti-twist devices

Han® EMC Hoods/Housings with high shielding efficiency

Field of application	For sensitive interconnections that have to be shielded against electrical, magnetic or electro-magnetic interferences
Distinguishing feature	Electrically conductive surface, internal seal
Material of hoods/housings	Die cast light alloy
Locking levers	Han-Easy Lock®
Cable entry protection	EMC cable clamp in order to connect the cable shielding to the hood without interruption of the shielding

Han® HPR Hoods/Housings, pressure tight

Field of application	For external electrical interconnections in vehicles, in highly demanding environments and wet areas, as well as for sensitive interconnections that have to be shielded
Distinguishing feature	hoods/housings colour-coded black, internal seal (RAL 9005)
Locking parts	Stainless steel
Material of hoods/housings	Die cast light alloy, corrosion resistant
Cable entry protection	Optional universal cable clamp for hoods with strain relief, or special cable clamp with bell mouthed cable fitting and anti-twist devices (use of adapter is necessary)

Type of hoods/housings

Han-INOX® Hoods/Housings

Field of application	for excellent mechanical and electrical protection in demanding environments, for example, in the food, automobile and mechanical engineering industries also for process and regulation control applications
Distinguishing feature	matt-finished metal surface
Material of hoods/housings	Stainless steel
Locking levers	Stainless steel

Recommended tightening torque for housings, bulkhead mounting

Series	Number of screws	Size of screws	Recommended Tightening torque (Nm)	Remarks
Han® 3 A	2	M 3	0.8 ... 1.0	Gasket
Han® 10 A / 16 A	4	M 3	0.8 ... 1.0	Gasket
Han® 15 EMV / 25 EMV	4	M 3	min. 1.0	O-ring
Han® 32 A	4	M 4	0.8 ... 1.0	Gasket
Han® 6 B / 10 B / 16 B / 24 B	4	M 4	0.8 ... 1.0	Gasket
Han® 32 B	4	M 5	min. 2.5	O-ring
Han® 48 B	4	M 6	min. 3.0	O-ring
Han® 3 HPR	2	M 4	min. 1.0	O-ring
Han® 6 / 10 / 16 / 24 HPR	4	M 6	min. 3.0	O-ring
Han® 48 HPR	4	M 8	min. 5.0	O-ring

To offer safe protection the surface condition for mounting panel should be according to DIN 4766:

- Waviness ≤ 0.2 mm on 200 mm distance
- Roughness R_a ≤ 16 µm

General remark for assembling

During assembly and handling of the connector, any kind of damage to the surface of the housing must be avoided to guarantee the correct surface protection.

Housing with 2 levers Han-Easy Lock®

- ❑ easy operation
- ❑ high degree of pressure tightness
- ❑ reliable locking guaranteed by 4 locking points
- ❑ space saving mounting
- ❑ ideal for mounting side by side
- ❑ cable to cable connection is possible
- ❑ high seal force

Details of Han-Easy Lock® see chapter 31

Housing with 1 lever Han-Easy Lock®

- ❑ easily accessible, even with side entry
- ❑ possibility to lock protective covers on the housing
- ❑ cable to cable connection is possible
- ❑ 2 locking points on the longitudinal axis

1 lever in central position

- ❑ easily accessible, even with side entry
- ❑ 2 locking points on the lateral axis
- ❑ space saving mounting
- ❑ ideal for mounting side by side
- ❑ single hand operation

Screw locking / toggle locking

- ❑ hexagon nuts tightened with spanner
- ❑ highest degree of pressure tightness
- ❑ easily accessible, also with side entry
- ❑ use of tools avoids access by unauthorized persons

Hood with 2 levers Han-Easy Lock®

- ❑ easy operation
- ❑ high degree of pressure tightness
- ❑ ideal for mating to housings with protection cover
- ❑ high seal force

Details of Han-Easy Lock® see chapter 31

Crimp connection

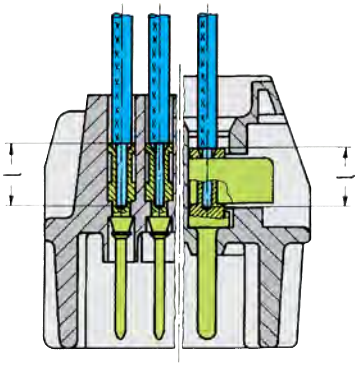

Han DD®
Han D®
R 15
Han-Modular® (10 A)
Han E®
Han A®
Han Hv E®

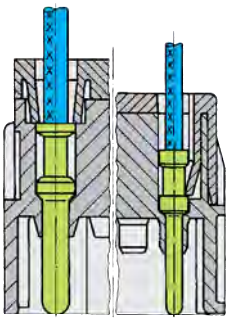

Han-Com® (40 A)
Han-Modular® (40 A)
Han E®
Han A®
Han Hv E®
Han® EE
Han® EEE
Han-Modular® (16 A)
Han® Q

A perfect crimp connection is gastight, therefore corrosion free and amounts to a cold weld of the parts being connected. For this reason, major features in achieving high quality crimp connections are the design of the contact crimping parts and of course the crimping tool itself. Wires to be connected must be carefully matched with the correct size of crimp contacts. If these basic requirements are met, users will be assured of highly reliable connections with low contact resistance and high resistance to corrosive attack.

The economic and technical advantages are:

- Constant contact resistance as a result of precisely repeated crimp connection quality
- Corrosion free connections as a result of cold weld action
- Pre-preparation of cable forms with crimp contacts fitted
- Optimum cost cable connection

Requirements for crimp connectors are laid down in DIN EN 60 352-2 as illustrated in the table.

Pull out force of stranded wire

The main criterion by which to judge the quality of a crimp connection is the retention force achieved by the wire conductor in the terminal section of the contact. DIN EN 60 352-2 defines the extraction force in relation to the cross-section of the conductor. When fitted using HARTING crimping tools and subject to their utilization in an approved manner, our crimp connectors comply with the required extraction forces.

Crimping tools

Crimping tools (hand operated or automatic) are carefully designed to produce with high pressure forming parts a symmetrical connection of the crimping part of the contact and the wire being connected with the minimum increase in size at the connection point. The positioner automatically locates the crimp and wire at the correct point in the tool.

A ratchet in the tool performs 2 functions:

- It prevents insertion of the crimp into the tool for crimping before the jaws are fully open
- It prevents the tool being opened before the crimping action is completed

Identical, perfectly formed, connections can be produced using this crimping system.

Crimp-cross section

HARTING-crimp profile

BUCHANAN crimp profile

Tensile strength of crimped connections
(Table 1 of the DIN EN 60 352-2)

Conductor cross-section		Tensile strength
mm²	AWG	N
0.05	30	6
0.08	28	11
0.12	26	15
0.14		18
0.22	24	28
0.25		32
0.32	22	40
0.5	20	60
0.75		85
0.82	18	90
1.0		108
1.3	16	135
1.5		150
2.1	14	200
2.5		230
3.3	12	275
4.0		310
5.3	10	355
6.0		360
8.4	8	370
10.0		380

Wire gauge		Internal diameter	Stripping length l (mm)		
(mm²)	AWG	Ø (mm)	Han® DD Han® D R15 Han-Modular® (10 A)	Han E® Han A® Han Hv E®	Han® C
0.14 ... 0.37	26 ... 22	0.9	8	-	-
0.5	20	1.15	8	7.5	-
0.75	18	1.3	8	7.5	-
1	18	1.45	8	7.5	-
1.5	16	1.75	8	7.5	9.5
2.5	14	2.25	6	7.5	9.5
4	12	2.85	-	7.5	9.5
6	10	3.5	-	-	9.5
10	8	4.3	-	-	12-18

	Conductor cross-section	ø	Stripping length
Han® 100 A Modul	10 mm²	4.3 mm	19.0 mm
	16 mm²	5.5 mm	19.0 mm
	25 mm²	7.0 mm	19.0 mm
	35 mm²	8.2 mm	16.0 mm
Han® HC Modular 350	35 mm²	8.2 mm	26.0 mm
	50 mm²	10.0 mm	28.0 mm
	70 mm²	11.5 mm	28.0 mm
	95 mm²	13.5 mm	30.0 mm
	120 mm²	15.5 mm	24.0 mm
Han® HC Modular 650	240 mm²	22.5 mm	50.0 mm
for fine stranded wires according to IEC 60 228 class 5			

Screw terminal

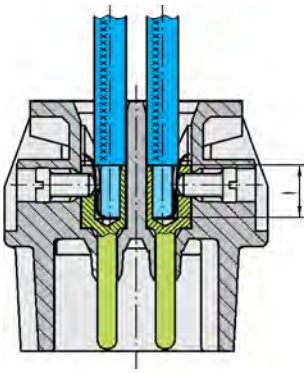

Screw terminals meet VDE 0609 /EN 60 999. Dimensions and tightening torques for testing are shown in following table.
Screw dimensions and tightening torque for screw terminals

Wire gauge (mm²)	1.5	2.5	4	6	10	16
Screw thread	M3	M3	M3.5	M4	M4	M6
Test moment of torque (Nm)	0.5	0.5	0.8	1.2	1.2	1.2*
min. pull-out for stranded wire (N)	40	50	60	80	90	100

* for screws without heads

The relevant regulations state that in the case of

- Terminals with wire protection

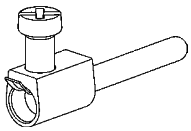

the use of ferrules is not necessary. Series Han E®, Han® HsB, Han Hv E®, Han® K 6/12, Han® K 6/6

- Terminals without wire protection

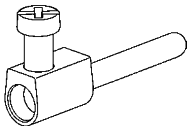

The insulation is first stripped and then a wire ferrule must be used.
Series Han® K 4/x, Han A®, Staf®

Screw terminal

Inserts	Wire protection		min. wire gauge		max. wire gauge*		Stripping length
	Yes	No	mm²	AWG	mm²	AWG	mm
Han® 3 A, Han® 4 A		X	0.75	18	1.5	16	4.5
Han® 10 A, 16 A, 32 A		X	0.75	18	2.5	14	7.5
Han E®, Hv E®	X		0.75	18	2.5	14	7.5
Han® HsB	X		1.5	16	6	10	11.5
Han® K 6/6, K 6/12 (signal contacts)	X		0.2	24	2.5	14	7.5
Han® K 4/2, K 4/8 (signal contacts)		X	0.5	20	2.5	14	7.5
Han® K 4/0, K 4/2, K 4/8 (power contacts)		X	1.5	16	16	6	14
Han E® AV, Han D® AV	X		0.2	24	2.5	14	8 ... 11
Staf®		X	0.5	18	1.5	16	4.5

* Rated wire gauge according to DIN EN 60 999-1

Recommended screw drivers and tightening torques

Screw size	Connector type	Tightening torque (Nm)	Tightening torque (lbft)	Recommended screw driver
M3	Screw terminals: Han® 3A /4A /Q5/0 (PE) / Staf®	0.25	0.20	slotted 0.4 x 2.5
M3	Screw terminals: Han D® AV, Han E® AV, Han® K6/6, K6/12 (signal)	0.5	0.4	slotted 0.5 x 3.0
M3	Screw terminals: Han® 10A - 32A, Han® E, Hv E®, Han® HsB	0.5	0.4	slotted 0.6 x 3.5 or PH 1
M3	Han® fixing screws	0.5	0.4	slotted 0.6 x 3.5 or PH 1 or PH 2
M3	Han® guiding pins and bushes	0.5	0.4	slotted 1 x 6.0
M3.5	Ground terminals: Han® 10A, Han® 16A, Han 15 D®, Han 25 D®	0.8	0.6	slotted 0.6 x 3.5 or PH 1
M4	Screw terminals: Han® HsB	1.20	0.90	slotted 0.6 x 3.5 or PH 1
M4	Ground terminals: Han E®, Han 40 D®, Han 64 D®, Han DD®, Han® K 8/24, K6/6, K8/0	1.20	0.90	slotted 0.8 x 4.5 or PH 2
M5	Ground terminals: Han® HsB, Han® K12/2, K4/X, K6/12, K6/36	2	1.40	slotted 0.8 x 4.5 or PH 2
M6	Screw terminals: Han® K power contacts, Han-Eco® PE module	for Han® K see chapter 05, Han-Eco® PE module (1,2-3 Nm)		slotted 0,8 x 4,5

Preferred size

Increasing the tightening torque does not improve considerably the contact resistances.The torque moments were determined when optimum mechanical, thermal and electrical circumstances were given. If the recommended figures are considerably exceeded the wire or the termination can be damaged.

Han-Quick Lock® termination technique

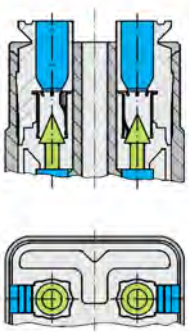

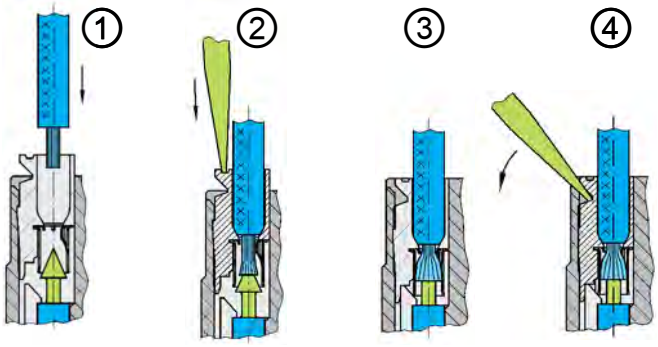

This new termination technique from HARTING combines the reliability and the simple operation of the cage clamp termination with the low space requirements of crimp technology.

Han-Quick Lock® is ideally suited to high contact densities and is considerably superior over other termination techniques. No other technology is so simple, space saving and fast. For this vibration safe termination, no special tools are necessary.

- Fast, simple and robust termination technique
- Field assembly without a special tool
- Compatible also to inserts with other termination technologies
- Combines high contact density similar to crimp termination with the simple connection like a cage clamp terminal

Insert connectors:	Han® 3 A Han® 4 A Han® 7 D Han® 8 D Han® Q 4/2 Han® Q 5/0 Han® Q 8/0 Han® Q 12/0 Han® EE modules Han® DD modules Han® PushPull Power 4/0

Technical characteristics:

Material	
Isolation body	Polycarbonate
Active termination element	Polycarbonate
Quick-Lock spring	Stainless steel
Contact	Copper alloy
Blue slide	Terminal cross-section 0.5 ... 2.5 mm² / AWG 20 ... 14
Black slide	Terminal cross-section 0.25 ... 1.5 mm² / AWG 23 ... 16
Stripping length	10 mm
Insulating resistance	> 10^{10} Ohm
Flammability	according to UL 94 V 0
Termination tool	Screwdriver 0.4 x 2.5 mm bzw. 0.5 x 3.0 mm

Axial screw terminal

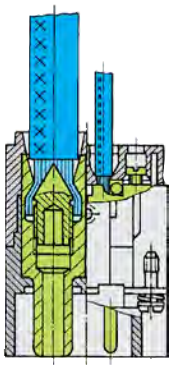

This termination combines the benefits of screw and crimp terminations:

- Less space required
- Easy handling
- No special tools

Remarks on the axial screw technique

The wire gauges mentioned in the catalogue refer to geometric wire gauges of cables.

Background:

According to DIN VDE 0295 for cables and insulated wires the wire gauge will be determined by conductance (Ω/km) and maximum wire diameter. A minimum cable diameter is not specified! (Example:nominal wire gauge 95 mm² → real, geometric wire gauge 89 mm²)

Recommendation:

The use of cables with an extreme geometric wire gauge deviation should be checked separately with the use of the axial screw termination.

Strain relief:

For safe operation the cable must be fixed at an adequate distance from the terminal to ensure that the contact is protected against radial stress.

Details for professional strain relief design can be found in the standard DIN VDE 0100-520: 2003-06 (see enclosed table).

Outer cable diameter (mm)	Maximum fixing distance (mm)	
	horizontal	vertical
D ≤ 9	250	400
9 < D < 15	300	400
15 < D < 20	350	450
20 < D < 40	400	550

Cables:

The axial screw technology is developed for wires according to DIN EN 60 228 class 5 (see table: Wire assembly according to DIN EN 60 228). Deviating cable assemblies have to be tested separately.

Assembly remarks:

Before starting the assembly the user must ensure that the axial cone is screwed fully downward to completely open the contact chamber.

After stripping the cable insulation the strands must not be twisted and the maximum cable insulation must not exceed the recommended dimension.

Insert the wire completely into the contact chamber until the copper strands reach the bottom. Keep the cable in position while applying the recommended tightening torque.

Maintenance of the axial screw termination:

After initial assembly it is only allowed to reapply the recommended tightening torque once in order to avoid damage to individual cable strands.

Wire gauge (mm²)	Stranded wires DIN EN 60228 class 2	Fine stranded wires DIN EN 60228 class 5	Super fine stranded wires DIN EN 60228 class 6			
0.5	7 x 0.30	16 x 0.20	28 x 0.15	64 x 0.10	131 x 0.07	256 x 0.05
0.75	7 x 0.37	24 x 0.20	42 x 0.15	96 x 0.10	195 x 0.07	384 x 0.05
1	7 x 0.43	32 x 0.20	56 x 0.15	128 x 0.10	260 x 0.07	512 x 0.05
1.5	7 x 0.52	30 x 0.25	84 x 0.15	192 x 0.10	392 x 0.07	768 x 0.05
2.5	7 x 0.67	50 x 0.25	140 x 0.15	320 x 0.10	651 x 0.07	1280 x 0.05
4	7 x 0.85	56 x 0.30	224 x 0.15	512 x 0.10	1040 x 0.07	
6	7 x 1.05	84 x 0.30	192 x 0.20	768 x 0.10	1560 x 0.07	
10	7 x 1.35	80 x 0.40	320 x 0.20	1280 x 0.10	2600 x 0.07	
16	7 x 1.70	128 x 0.40	512 x 0.20	2048 x 0.10		
25	7 x 2.13	200 x 0.40	800 x 0.20	3200 x 0.10		
35	7 x 2.52	280 x 0.40	1120 x 0.20			
50	19 x 1.83	400 x 0.40	705 x 0.30			
70	19 x 2.17	356 x 0.50	990 x 0.30			
95	19 x 2.52	485 x 0.50	1340 x 0.30			
120	37 x 2.03	614 x 0.50	1690 x 0.30			
150	37 x 2.27	765 x 0.50	2123 x 0.30			
185	37 x 2.52	944 x 0.50	1470 x 0.40			
240	61 x 2.24	1225 x 0.50	1905 x 0.40			

Wire assembly according to DIN EN 60 228

Insert	Wire gauge	Stripping length	Tightening torque	Max. cable insulation diameter	Size hexagon recess	Insert dimension for cable indication (ISK)
	(mm²)	(mm)	(Nm)	(mm)	(SW)	(mm)
Han® K 4/4 finger proofed	6 ... 16	6 mm²: 11+1 10 mm²: 11+1 16 mm²: 11+1	6 mm²: 2 10 mm²: 3 16 mm²: 4	8.9	2.5	7.4 PE: 8.9
	10 ... 22	10 mm²: 11+1 16 mm²: 11+1 22 mm²: 11+1	10 mm²: 3 16 mm²: 4 22 mm²: 4	8.9 8.9 11	2.5	7.4 7.4 5.4 PE: 8.9
Han® K 4/4	6 ... 16	6 mm²: 11+1 10 mm²: 11+1 16 mm²: 11+1	6 mm²: 2 10 mm²: 3 16 mm²: 4	8.9	2.5	7.4 PE: 8.9
	10 ... 22	10 mm²: 11+1 16 mm²: 11+1 22 mm²: 13+1	10 mm²: 3 16 mm²: 4 22 mm²: 4	8.9 8.9 11	2.5	7.4 7.4 5.4 PE: 8.9
Han® K 6/12	2.5 ... 8	2.5 mm²: 5+1 4 mm²: 5+1 6 mm²: 8+1 8 mm²: 8+1	2.5 mm²: 1.5 4 mm²: 1.5 6 mm²: 2 8 mm²: 2	6.2	2	7.4
	6 ... 10	6 mm²: 8+1 8 mm²: 8+1 10 mm²: 8+1	6 mm²: 2 8 mm²: 2 10 mm²: 2	6.2	2	4.7
Han® K 6/6	10 ... 25	10 mm²: 13+/-1 16 mm²: 13+/-1 25 mm²: 13+/-1	10 mm²: 6 16 mm²: 6 25 mm²: 7	11.4	4	4.9
	16 ... 35	16 mm²: 13+/-1 25 mm²: 13+/-1 35 mm²: 13+/-1	16 mm²: 6 25 mm²: 7 35 mm²: 8	11.4	4	4.9
Han® K 8/0	10 ... 25	10 mm²: 13+/-1 16 mm²: 13+/-1 25 mm²: 13+/-1	10 mm²: 6 16 mm²: 6 25 mm²: 7	11.4	4	4.75
Han® Q 2/0 Han® Q 2/0 High Voltage	2.5 ... 10	2.5 mm²: 8+1 4 mm²: 8+1 6 mm²: 8+1 10 mm²: 8+1	2.5 mm²: 1.8 4 mm²: 1.8 6 mm²: 1.8 10 mm²: 1.8	7.3	2	5.6
Han® Q 4/2 Han® Q 4/2 with Han-Quick Lock®	4 ... 10	4 mm²: 8+1 6 mm²: 8+1 10 mm²: 8+1	4 mm²: 1.8 6 mm²: 1.8 10 mm²: 1.8	7.3	2	5.6
Han® 200 A module without PE Han® 200 A module with PE	25 ... 40	25 mm²: 16 40 mm²: 16	25 mm²: 8 40 mm²: 8	12 16	5	0
	40 ...70	40 mm²: 16 70 mm²: 16	40 mm²: 9 70 mm²: 10	12 16	5	0
Han® 100 A module	6 ... 10	6 mm²: 13+/-1 8 mm²: 13+/-1 10 mm²: 13+/-1	6 mm²: 4 8 mm²: 4 10 mm²: 4	11.4	2.5	4.9
	10 ... 25	10 mm²: 13+/-1 16 mm²: 13+/-1 25 mm²: 13+/-1	10 mm²: 6 16 mm²: 6 25 mm²: 7	11.4	4	4.9
	16 ... 35	16 mm²: 13+/-1 25 mm²: 13+/-1 35 mm²: 13+/-1	16 mm²: 6 25 mm²: 7 35 mm²: 8	11.4	4	4.9
	38	38 mm²: 13+/-1	38 mm²: 8	11.4	4	4.9
Han® 70 A module	6 ... 16	6 mm²: 11+1 10 mm²: 11+1 16 mm²: 11+1	6 mm²: 2 10 mm²: 3 16 mm²: 4	8.9	2.5	7.4
	14 ... 22	14 mm²: 12.5+1 16 mm²: 12.5+1 22 mm²: 12.5+1	14 mm²: 4 16 mm²: 4 22 mm²: 4	10	2.5	5.9
Han® 40 A module	2.5 ... 8	2.5 mm²: 5+1 4 mm²: 5+1 6 mm²: 8+1 8 mm²: 11+1	2.5 mm²: 1.5 4 mm²: 1.5 6 mm²: 2 10 mm²: 2	4 4 6 10.5	2	4.7
	6 ... 10	6 mm²: 8+1 10 mm²: 11+1	6 mm²: 2 10 mm²: 2	6 10.5	2	4.7

Insert	Wire gauge	Stripping length	Tightening torque	Max. cable insulation diameter	Size hexagon recess	Insert dimension for cable indication (ISK)
	(mm²)	(mm)	(Nm)	(mm)	(SW)	(mm)
Han® C module with axial screw terminal	2.5 ... 8	2.5 mm²: 5+1 4 mm²: 5+1 6 mm²: 8+1 8 mm²: 8+1	2.5 mm²: 1.5 4 mm²: 1.5 6 mm²: 2 8 mm²: 2	4 4 6 8.2	2	5.2
	6 ... 10	6 mm²: 8+1 10 mm²: 11+1	6 mm²: 2 10 mm²: 2	6 8.2	2	5.2
Han® K3/0 straight	25 ... 40	25 mm²: 22 40 mm²: 22	25 mm²: 8 40 mm²: 8	15	5	8.2
	35 ... 70	35 mm²: 22 50 mm²: 22 70 mm²: 22	35 mm²: 8 50 mm²: 9 70 mm²: 10	15	5	8.2
Han® K3/0 angled	25 ... 40	25 mm²: 22 40 mm²: 22	25 mm²: 8 40 mm²: 8	15	5	9
	35 ... 70	35 mm²: 22 50 mm²: 22 70 mm²: 22	35 mm²: 8 50 mm²: 9 70 mm²: 10	15	5	9
Han® K3/2 straight	35 ... 70 PE: 25 ... 40	35 mm²: 22 50 mm²: 22 70 mm²: 22 PE: 14	35 mm²: 8 50 mm²: 9 70 mm²: 10	power: 15 PE: 10	5	power: 8.2 PE: 7.2
Han® K3/2 angled	25 ... 40	25 mm²: 22 40 mm²: 22 PE: 14	25 mm²: 8 40 mm²: 8	power: 15 PE: 10	5	power: 9.0 PE: 7.2
	35 ... 70 PE: 25 ... 40	35 mm²: 22 50 mm²: 22 70 mm²: 22	35 mm²: 8 50 mm²: 9 70 mm²: 10	power: 15 PE: 10	5	power: 9.0 PE: 7.2
Han® HC Modular 350	20 ... 35	20 mm²: 19+1 35 mm²: 19+1	20 mm²: 8 35 mm²: 8	19.5	5	13
	35 ... 70	35 mm²: 19+1 50 mm²: 19+1 70 mm²: 19+1	35 mm²: 8 50 mm²: 10 70 mm²: 12	19.5	5	13
	95 ... 120	95 mm²: 19+1 120 mm²: 19+1	95 mm²: 14 120 mm²: 16	19.5	5	13
Ground contact for Han® HC Modular	35 ... 70	35 mm²: 19+1 50 mm²: 19+1 70 mm²: 19+1	35 mm²: 8 50 mm²: 10 70 mm²: 12	-	5	-
Han® HC Modular 650	60 ... 70	60 mm²: 23+2 70 mm²: 23+2	60 mm²: 12 70 mm²: 12	27	8	28
	70 ... 120	70 mm²: 23+2 95 mm²: 23+2 120 mm²: 23+2	70 mm²: 12 95 mm²: 14 120 mm²: 16	26.5	8	28
	150 ... 185	150 mm²: 23+2 185 mm²: 23+2	150 mm²: 17 185 mm²: 18	26.5	8	28

Overview inserts with axial screw terminal

Insulating base dimension for the cable marking (ISK)

Marking the proper cable position for the axial screw connection contact point:

The user can attach a marker to the cable sheathing in order to specify the proper point for tightening the axial screw on the connecting cable. If the cable in pushed into the insulating base up to the marker (where the marker is flush with the upper edge of the insulating base), then the cable is in the proper position and may be connected. The following figure (on the next page) illustrates this process when using the Han® HC Modular 350 contact. The marker and the upper edge of the insulating base are at the same level (as indicated by the dashed line).

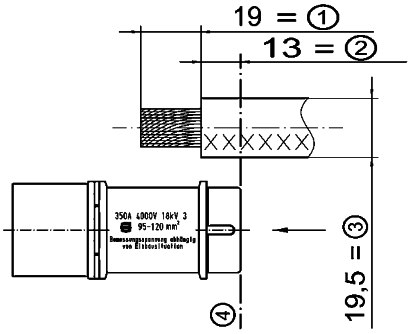

① stripping length
② insulator dimension (ISK dimension)
③ max. cable insulation diameter
④ sink line

Cage-clamp terminal

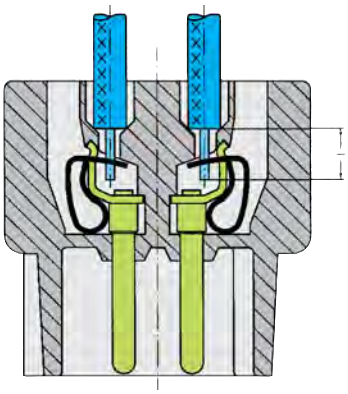

This termination method requires very little preparation of the wire and no special tools, leading to a low installed cost and a high degree of mechanical security.

- For all stranded and solid wires with a cross section 0.14 to 2.5 mm².
- Ease of termination. Conductor and screwdriver are in same plane.
- No special preparation of stripped conductor.
- The larger the conductor the higher the clamping force.
- The termination is vibration-proof.
- Guaranteed constant low resistance connection of the cage-clamp terminal.
- The cage-clamp system is internationally approved.
  VDE, CSA, UL, ÖVE, SEMKO, LCIE (France), Germanischer Lloyd, DET Norske Veritas

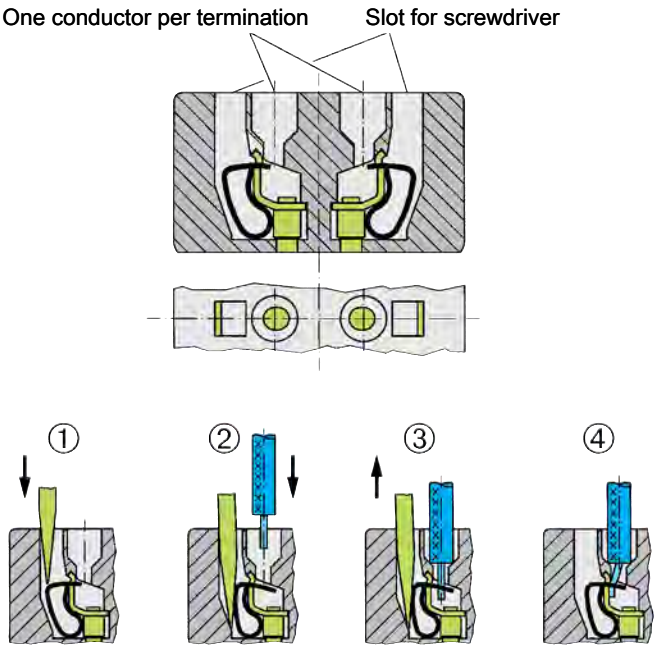

Screwdriver width:3.0 x 0.5 mm

Inserts	max. wire gauge		Stripping length
	(mm²)	AWG	l (mm)
Han® ES, Han® Hv ES	0.14 ... 2.5	26 ... 14	7 ... 9
Han® ESS	0.14 ... 2.5	26 ... 14	9 ... 11
Han® K 4/4	0.14 ... 2.5	26 ... 14	7 ... 9
Han® ES Modul	0.14 ... 2.5	26 ... 14	7 ... 9

IDC (Insulation displacement terminal)

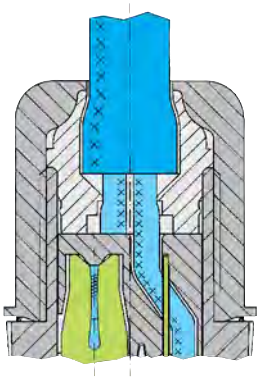

Inserts	max. wire gauge	
	(mm²)	AWG
M8-S/M12-S	0.14 ... 0.34	26 ... 22
Circular connectors M12 angled	0.25 ... 0.50	24 (7/32) ... 22
Circular connectors M12-L	0.34 ... 0.75	22 ... 18
M12-L PROFIBUS	0.25 ... 0.34	24 ... 22
M12-L Ethernet	0.25 ... 0.34	24 ... 22
	0.34 ... 0.5	22 ... 18
Panel feed through Pg 13.5 /M20	0.75 ... 1.50	18 ... 16
Panel feed through Pg 9	0.25 ... 0.50	24 (7/32) ... 22
HARAX® 3 A	0.75 ... 1.5	18 ... 16

General

The choice of connectors entails more than just considering factors such as functionality, the number of contacts, current and voltage ratings. It is equally important to take account of where the connectors are to be used and the prevailing ambient conditions. This in turn means that, dependent on the conditions under which they are to be installed and pursuant to the relevant standards, different voltage and current ratings may apply for the same connectors.

The most important influencing factors and the corresponding electrical characteristics of the associated connectors are illustrated here in greater detail.

Overvoltage category

The overvoltage category is dependent on the mains voltage and the location at which the equipment is installed. It describes the maximum overvoltage resistance of a device in the event of a power supply system fault, e. g. in the event of a lightening strike.

The overvoltage category affects the dimensioning of components in that it determines the clearance air gap. Pursuant to the relevant standards, there are 4 overvoltage categories.

Equipment for industrial use, such as fall HARTING heavy duty Han connector, fall into Overvoltage Category III.

Extract from DIN VDE 0110-1 and IEC 60 664-1, Para. 2.2.2.1.1

Equipment of overvoltage category IV is for use at the origin of the installation.

Note 1: Examples of such equipment are electricity meters and primary overcurrent protection equipment.

Equipment of overvoltage category III is equipment in fixed installations and for cases where the reliability and the availability of the equipment is subject to special requirements.

Note 2: Examples of such equipment are switches in the fixed installation and equipment for industrial use with permanent connection to the fixed installation.

Equipment of overvoltage category II is energy-consuming equipment to be supplied from the fixed installation.

Note 3: Examples of such equipment are appliances, portable tools and other household equipment with similar loads.

If such equipment is subjected to special requirements with regard to reliability and availability, overvoltage category III applies.

Equipment of overvoltage category I is equipment for connection to circuits in which measures are taken to limit transient overvoltages to an appropriately low level.

Note: Examples are protected electronic circuits.

Rated impulse voltages (Table B2 of DIN EN 60 664-1)

Voltage line-to-neutral derived from nominal voltages A.C. or D.C. up to and including	Nominal voltages presently used in the world (= Rated insulation voltage of equipment)				Rated impulse voltage for equipment			
	Three-phase 4-wire systems with earthed neutral	Three-phase 3-wire systems earthed or unearthed	Single-phase 2-wire systems A.C. or D.C.	Single-phase 3-wire systems A.C. or D.C.	Overvoltage category			
	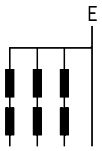	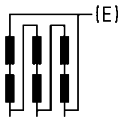			I	II	III	IV
					Special protected levels	Level for electrical equipment (household and others)	Level for distribution supply systems	Input level
V	V	V	V	V	V	V	V	V
50			12.5 24 25 30 42 48	30 ... 60	330	500	800	1500
100	66/115	66	60		500	800	1500	2500
150	120/208* 127/220	115, 120 127	100** 110, 220	100 ... 200** 110 ... 220 120 .. 240	800	1500	2500	4000
300	220/380, 230/400 240/415, 260/440 277/480	200**, 220 230, 240 260, 277	220	220 ... 440	1500	2500	4000	6000
600	347/600, 380/660 400/690, 417/720 480/830	347, 380, 400 415, 440, 480 500, 577, 600	480	480 ... 960	2500	4000	6000	8000
1000		660 690, 720 830, 1000	1000		4000	6000	8000	12 000

* ... Practice in the U.S.A and in Canada
** ... Practice in Japan

Pollution degree

The dimensioning of operating equipment is dependent on environmental conditions. Any pollution or contamination may give rise to conductivity that, in combination with moisture, may affect the insulating properties of the surface on which it is deposited. The pollution degree influences the design of components in terms of the creepage distance.

The pollution degree is defined for exposed, unprotected insulation on the basis of environmental conditions.

HARTING heavy duty Han connectors are designed as standard for Pollution Degree 3.

Pollution degree 1
in air-conditioned or clean, dry rooms, such as computer and measuring instrument rooms, for example.

Pollution degree 2
in residential, sales and other business premises, precision engineering workshops, laboratories, testing bays, rooms used for medical purposes. As a result of occasional moisture condensation, it is to be anticipated that pollution/contamination may be temporarily conductive.

Pollution degree 3
in industrial, commercial and agricultural premises, unheated storage premises, workshops or boiler rooms, also for the electrical components of assembly or mounting equipment and machine tools.

Pollution degree 4
in outdoor or exterior areas such as equipment mounted on the roofs of locomotives or tramcars.

Extract from DIN EN 60 664-1 (VDE 0110-1), Para. 4.6.2

Pollution degree 1: No pollution or only dry, non-conductive pollution occurs. The pollution has no influence.

Pollution degree 2: Only non-conductive pollution occurs except that occasionally a temporary conductivity caused by condensation is to be excepted.

Pollution degree 3: Conductive pollution occurs or dry non-conductive pollution occurs which becomes conductive due to condensation which is to be expected.

Pollution degree 4: Continuous conductivity occurs due to conductive dust, rain or other wet conditions.

Special ruling for connectors

Subject to compliance with certain preconditions, the standard for connectors permits a lower pollution degree than that which applies to the installation as a whole. This means that in a pollution degree 3 environment, connectors may be used which are electrically rated for pollution degree 2.
The basis for this is contained in DIN EN 61 984, Para. 6.19.2.3.

Extract form DIN EN 61 984, Para. 6.19.2.3

For a connector with a degree of protection IP 54 or higher according to IEC 60 529 the insulating parts inside the enclosure may be dimensioned for a lower pollution degree.

This also applies to mated connectors where enclosure is ensured by the connector housing and which may only be disengaged for test and maintenance purposes.

The conditions fulfills,

- a connector which is protected to at least IP 54 as per IEC 60 529,
- a connector which is installed in a housing and which as described in the standard is disconnected for testing and maintenance purposes only,
- a connector which is installed in a housing and which when disconnected is protected by a cap or cover to at least IP 54,
- a connector located inside a switching cabinet to at least IP 54.

These conditions do not extend to connectors which when disconnected remain exposed to the industrial atmosphere for an indefinite period.

It should be noted that pollution can affect a connector from the inside of an installation outwards.

Typical applications in which to choose pollution degree 2 connectors:

- A connector serving a drive motor which is disconnected only for the purpose of replacing a defective motor, even when the plant or system otherwise calls for pollution degree 3.
- Connectors serving a machine of modular design which are disconnected for transport purposes only and enable rapid erection and reliable commissioning. In transit, protective covers or adequate packing must be provided to ensure that the connectors are not affected by pollution/contamination.
- Connectors located inside a switching cabinet to IP 54. In such cases, it is even possible to dispense with the IP 54 housings of the connectors themselves.

Specifying electrical data

Electrical data for connectors are specified as per DIN EN 61 984.

This example identifies a connector suitable for use in an unearthed power system or earthed delta circuit (see page 00.22, Table B2 of DIN EN 60 664-1):

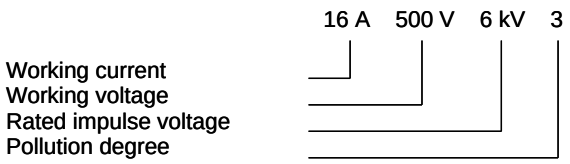

This example identifies a connector suitable exclusively for use in earthed power systems (see page 00.22, Table B2 of DIN EN 60 664-1):

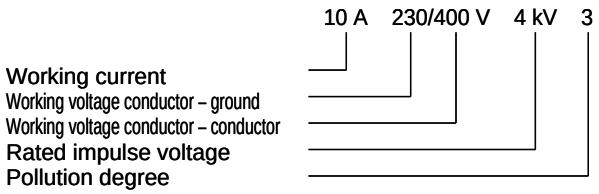

Other terms explained

Clearance air gap
The shortest distance through the air between two conductive elements (see DIN EN 60 664-1 (VDE 0110-1), Para. 3.2). The air gaps are determined by the surge voltage withstand level.

Creepage distance
Shortest distance on the surface of an solid insulating material between two conductive elements (see DIN EN 60 664-1 (VDE 0110-1), Para. 3.3). The creepage distances are dependent on the rated voltage, the pollution degree and the characteristics of the insulating material.

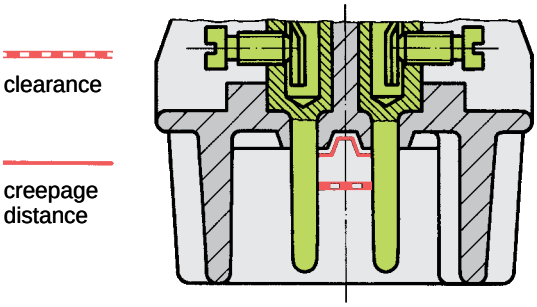

Working voltage
Fixed voltage value on which operating and performance data are based. More than one value for rated voltage or rated voltage range may be specified for the same connector.

Rated impulse voltage
The rated impulse voltage is determined on the basis of the overvoltage category and the nominal power supply voltage. This level in turn directly determines the test voltage for testing the overvoltage resistance of the connector (Waveform voltage in 1.2/50 µs as per IEC 60 060-1).

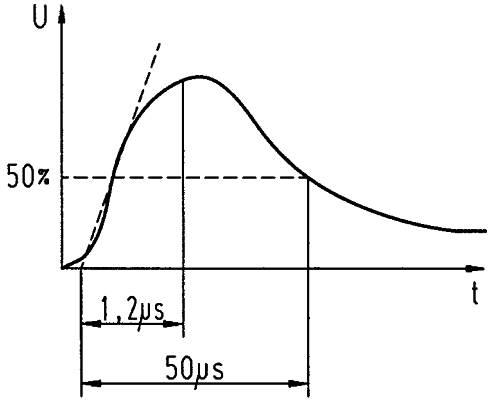

Working current
Fixed current, preferably at an ambient temperature of 40 °C, which the connector can carry on a permanent basis (without interruption), passing simultaneously through all contacts which are in turn connected to the largest possible conductors, without exceeding the upper temperature limit.
The dependence of the rated current on ambient temperature is illustrated in the respective derating diagrams.

Transient overvoltages
Short-term overvoltage lasting a few milliseconds or less, oscillatory or non-oscillatory, generally heavily damped (see DIN EN 60 664-1 (VDE 0110-1, Para. 3.7.2). An overvoltage may occur as a result of switching activities, a defect or lightening surge, or may be intentionally created as a necessary function of the equipment or component.

Power-frequency withstand voltage
A power-frequency overvoltage (50/60 Hz).
Applied for a duration of one minute when testing dielectric strength. For test voltages in association with surge voltage withstand levels, see extract from Table 8, DIN EN 61 984.

Test voltages (Extract from Table 8, DIN EN 61 984)

Impulse withstand voltage kV (1.2/50 µs) at an altitude of 2 000 m	RMS withstand voltage kV (50/60 Hz)
0.5	0.37
0.8	0.50
1.5	0.84
2.5	1.39
4.0	2.21
6.0	3.31
8.0	4.26
12.0	6.6.0

CTI (Comparative Tracking Index)
This figure gives an indication of the conductivity of insulating materials and affects the specified creepage distances. The influence of the CTI value on the creepage distance is as follows: the higher the index value, the shorter the creepage distance. The CTI is used to divide plastics into insulation groups.
Breakdown of insulation groups:

I	600 ≤ CTI
II	400 ≤ CTI < 600
IIIa	175 ≤ CTI < 400
IIIb	100 ≤ CTI < 175

Protection levels as per IEC 60 529
The protection level describes the leak-proof character of housing, e. g. for electrical equipment. It ranges from IP 00 to IP 68. HARTING heavy duty Han connectors feature a standard protection level of IP 65 (see page 00.09, Table based on DIN EN 60 529, IEC 60 529).

Derating diagram as per DIN EN 60 512-5-2
These diagrams are used to illustrate the maximum current carrying capacity of components. The illustration follows a curve which shows the current in relation to ambient temperature. Current carrying capacity is limited by the thermal characteristics of contacts and insulating elements which have an upper temperature limit which should not be exceeded.

Current carrying capacity

The current carrying capacity is determined in tests which are conducted on the basis of the DIN EN 60 512-5-2. The current carrying capacity is limited by the thermal properties of materials which are used for inserts as well as by the insulating materials. These components have a limiting temperature which should not be exceeded.

The relationship between the current, the temperature rise (loss at the contact resistance) and the ambient temperature of the connector is represented by a curve. On a linear coordinate system the current lies on the vertical line (ordinate) and the ambient temperature on the horizontal line (abscissa) which ends at the upper limiting temperature.

In another measurement the self-heating (Δt) at different currents is determined.

At least 3 points are determined which are connected to a parabolic curve, the basic curve.

The corrected current carrying capacity curve is derived from this basic curve. The reasons for the correction are external factors that bring an additional limitation to the current carrying capacity, i.e. connectable wire gauge or an unequal dispersion of current.

The derating diagrams pictured as curve have been primarily determined with tin-plated cables as well as with physical cross sections close to the respective ISO-cable cross section.

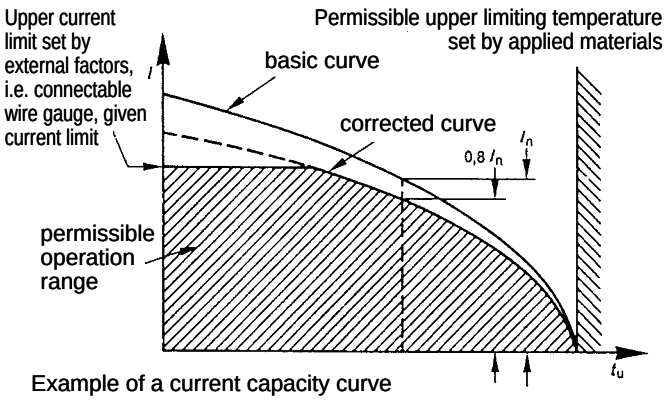

Example of a current capacity curve

Definition: The rated current is the continuous, not interrupted current a connector can take when simultaneous power on all contacts is given, without exceeding the maximum temperature.

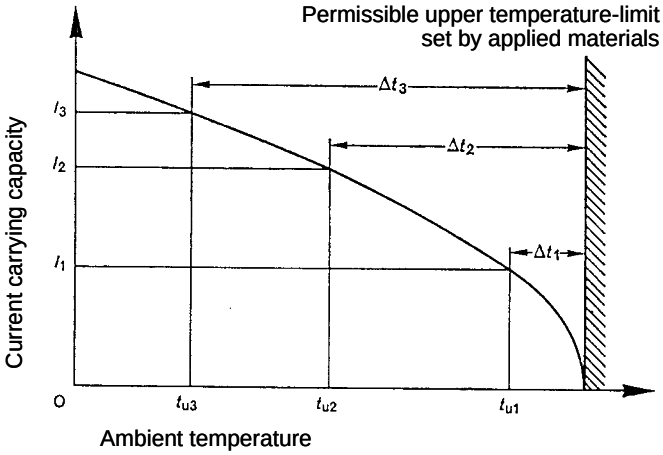

Example of a current carrying curve

Acc. to DIN EN 61 984 the sum of ambient temperature and the temperature rise of a connector shall not exceed the upper limiting temperature. The limiting temperature is valid for a complete connector, that means insert plus housing.

As a result the insert gives the limit for the temperature of a complete connector and thus housings as well.

In practice it is not usual to load all terminals simultaneously with the maximum current. In such a case one contact can be loaded with a higher current as permitted by the current capacity curve, if less than 20 % of the whole is loaded.

However, for these cases there are no universal rules. The limits have to be determined individually from case to case. It is recommended to proceed in accordance with the relevant rules of the DIN EN 60 512-5-2.

Current carrying capacity of copper wires

	Diameter [mm²] of single wires in a three-phase system	0.75	1	1.5	2.5	4	6	10	16	25	35
	Type of installation										
B1	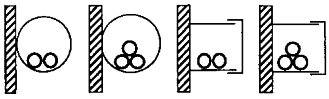 Conductors/single core cables in conduit and cable trunking systems	8.6	10.3	13.5	18.3	24	31	44	59	77	96
B2	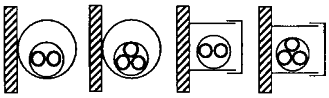 Cables in conduit and cable trunking systems	8.5	10.1	13.1	17.4	23	30	40	54	70	86
C	Cables on walls	9.8	11.7	15.2	21	28	36	50	66	84	104
E	Cables on open cable trays	10.4	12.4	16.1	22	30	37	52	70	88	110

Depiction in accordance with DIN EN 60 204-1 for PVC-insulated copper wires in an ambient temperature of + 40 °C under permanent operating conditions.

For different conditions and temperatures, installations, insulation materials or conductors the relevant corrections have to be carried out.

Transient current carrying capacity

A transient current in circuits can be generated by switching operations such as the starting of a motor or a short circuit in a faulty installation. This can cause thermal stress at the contact. These short and very high increases cannot be dissipated quickly and therefore a local heating effect at the contact is the result. Contact design is an important feature when transient currents are encountered. HARTING contacts are machined from solid material and are therefore relatively unaffected by short overloads when compared to stamped and formed designs. For guidance please see the table below.

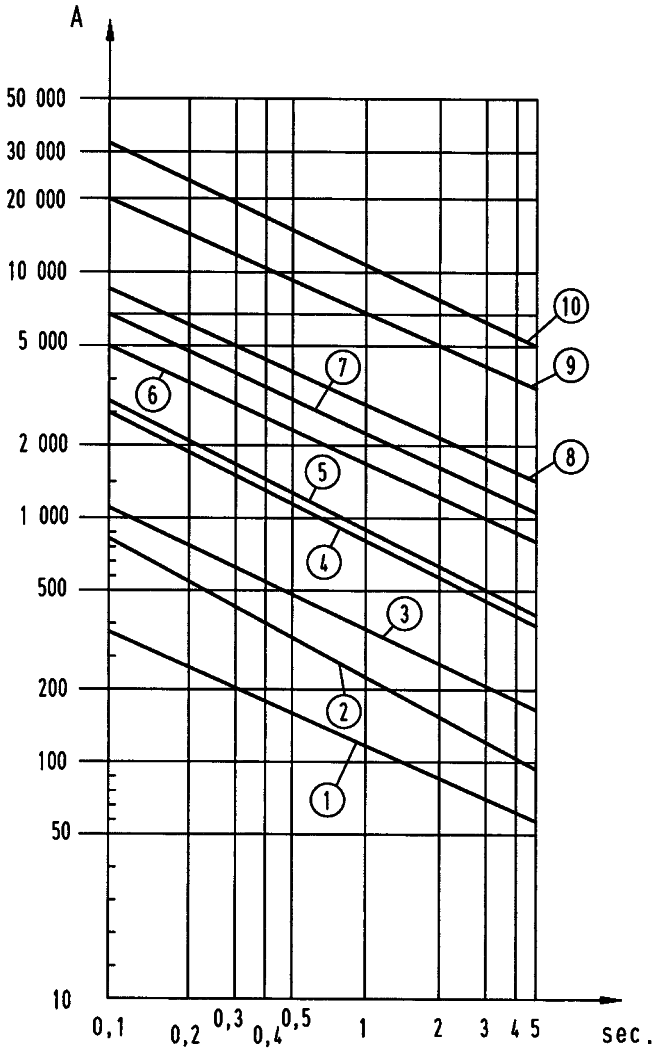

①	Han D®	I_N = 10 A
②	Han® 3 A / 4 A	I_N = 10 A
③	Han A® / Han E®, Han® ES, EE, Q 5/0	I_N = 16 A
④	Han® 6 HsB	I_N = 35 A
⑤	Han® C/K axial	I_N = 40 A
⑥	Han® K 4/8, Han® 70 A Modul	I_N = 80 A
⑦	Han® K 6/6	I_N = 100 A
⑧	Han® K 3/0	I_N = 200 A
⑨	Han® HC-Modular 350	I_N = 350 A
⑩	Han® HC-Modular 650	I_N = 650 A

Short circuit carrying capacity

Low currents and voltages

HARTING's standard contacts have a silver plated surface. This precious metal has excellent conductive properties. In the course of a contact's lifetime, the silver surface generates a black oxide layer due to its affinity to sulphur. This layer is smooth and very thin and is partly interrupted when the contacts are mated and unmated, thus guaranteeing very low contact resistances. In the case of very low currents or voltages small changes to the transmitted signal may be encountered. This is illustrated below where an artifically aged contact representing a twenty year life is compared with a new contact.

In systems where such a change to the transmitted signal could lead to faulty functions and also in extremely aggressive environments, HARTING recommend the use of gold plated contacts.

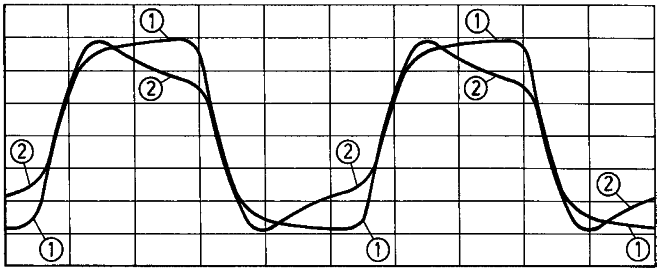

Changes to the transmitted signal after artifical ageing

① new contact

② after ageing

Below is a table derived from actual experiences.

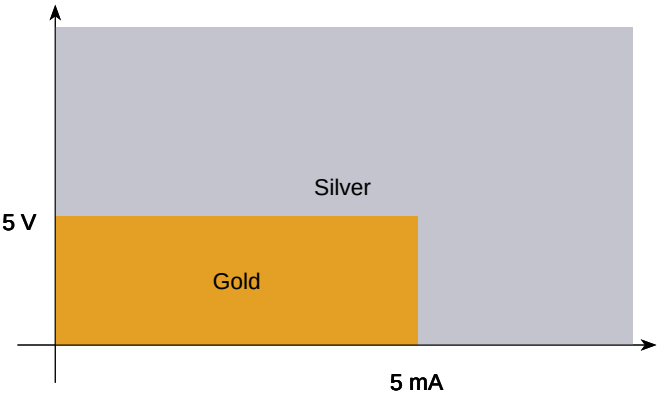

Recommendation

Cross Reference from Pg thread to metric cable thread

The reason for the new product offerings is the publication of the international DIN EN 50262 metric thread specification. The existing Pg series, Pg 7 to Pg 48 will be, in time, replaced by the metric series M 12 to M 63.

The adoption of metric threads considerably simplifies the understanding and specification of glands as the product type description contains the thread dimension. E.g. M 20 refers to 20 mm thread diameter.

To differentiate the metric threaded hoods and housings from the previous Pg versions metric types will be marked with (M).

The Cross Reference table shows the correlation between the Pg versions and the new metric types.

Please notice that the maximum cable diameter will be reduced by the new metric cable glands.

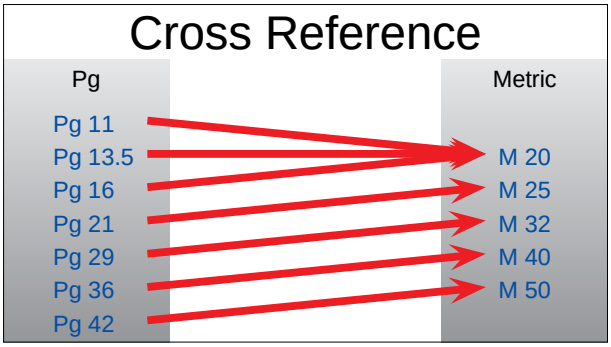

Below is shown the cable range of metric glands:

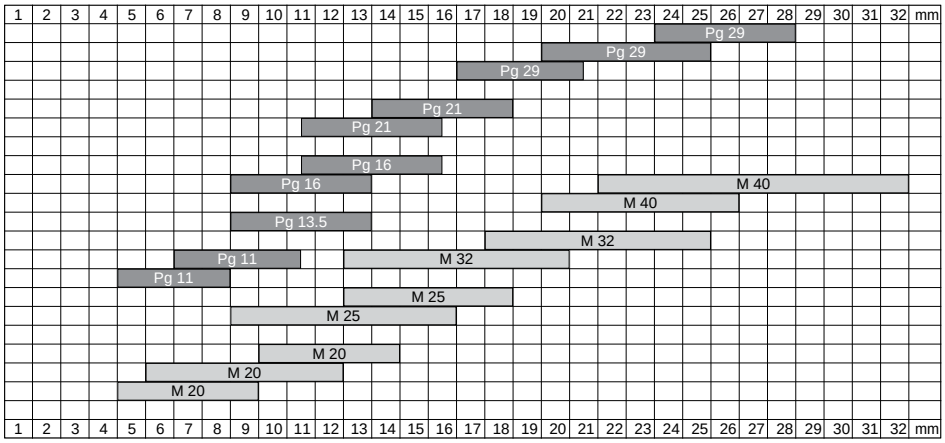

Cable

The diagram shows different cable-diameters, being dependent on wire gauges and number of conductors.
All data are averages for commercial cables.

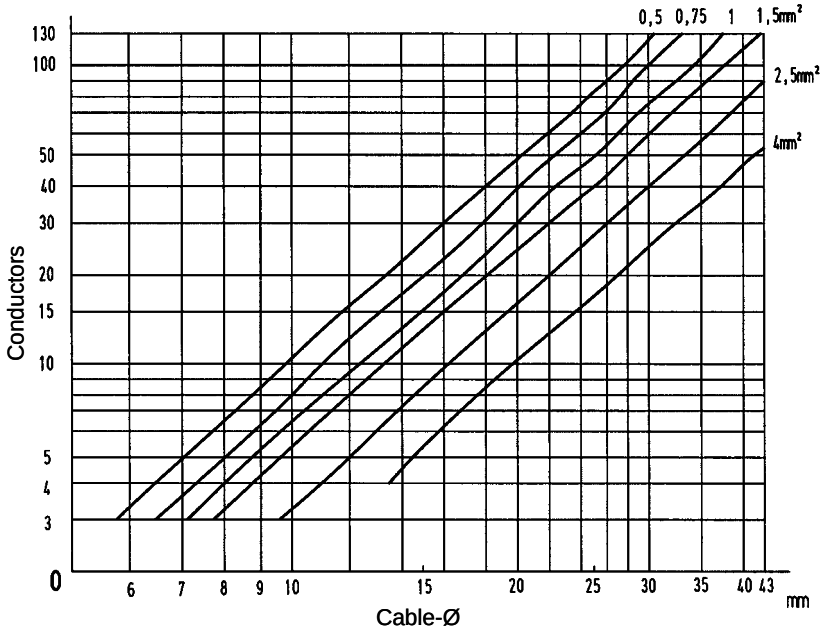

Declaration of Conformity

Han

This Declaration of Conformity is suitable to the European Standard EN ISO/IEC 17050-1:2010 "Conformity assessment – supplier´s declaration of conformity – Part 1: General requirements (ISO/IEC 17050-1:2004; corrected version 2007-06-15); German and English version EN ISO/IEC 17050-1:2010."

We

HARTING Electric GmbH & Co. KG
Wilhelm-Harting-Str. 1
32339 Espelkamp

declare under our own responsibility that the product series of

Heavy Duty Han® Connectors

is in conformity with the following standard(s) or other normative documents:

Connectors -
safety requirements and tests
IEC 61 984

This declaration of conformity refers to the Han®-series

Han A®	Han E®	Han® HsB
Han® B	Han E® AV	Han® K 3/0
Han-Brid®	Han® EE	Han® K 3/2
Han-Com®	Han® EEE	Han® M
Han D®	Han® ES	Han-Modular®
Han D® AV	Han® ESS	Han-Power®
Han DD®	Han® HC Modular 350	Han® Q
Han-Eco®	Han® HPR	Han-*Yellock*®

This declaration does not contain a warranty of characteristics. Safety references are to be considered.

DAkkS Deutsche Akkreditierungsstelle D-PL-12148-01-01

Our testing laboratory is accreditated and monitored by the German Accreditation Body Technology/ (DAkkS).
Reg.-Nr. D-PL-12148-01-01

QUALITY SYSTEM
certified by DQS acc. to ISO 9001 · Reg.-Nr. 2204

Our quality system is certified and monitored by DQS in conformity with the standard DIN EN ISO 9001:2008.
Cert.-Nr. 2204-QM08

Espelkamp, 23.11.2012
Place and Date of publication

Edgar Peter Düning
Managing Director

Espelkamp, 23.11.2012
Place and Date of publication

Andre Beneke
Director Product & Industry Segment Management

Contents | Page

Han® 3 A / Han® 4 A **01.2**

Han® 10 A / Han® 16 A / Han® 32 A **01.5**

Contacts **01.11**

Features

- Innovative Han-Quick Lock® termination technology with reduced wiring times
- No special tools required
- Insert suitable for all metal and plastic hoods and housings of the sizes Han® 3 A
- For currents up to 10 A

Derating

Current carrying capacity

The current carrying capacity of the connectors is limited by the thermal load capability of the contact element material including the connections and the insulating parts. The derating curve is therefore valid for currents which flow constantly (non-intermittent) through each contact element of the connector evenly, without exceeding the allowed maximum temperature.

Measuring and testing techniques acc. to IEC 60512-5-2

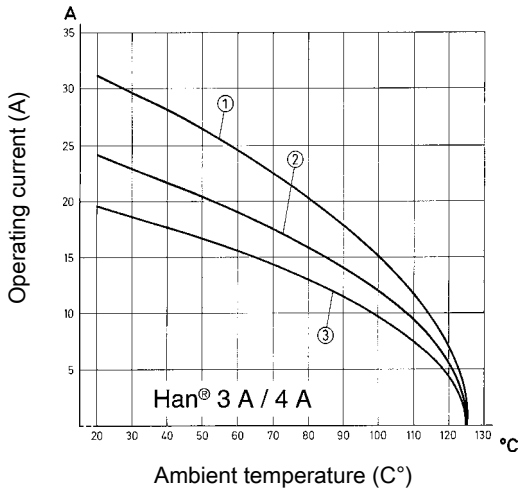

① Wire cross section 2.5 mm²
② Wire cross section 1.5 mm²
③ Wire cross section 1 mm²

Technical characteristics

Contacts	3, 4
Electrical data acc. to IEC 61984	**10 A 230/400 V 4 kV 3**
Rated current	10 A
Rated voltage conductor - ground	230 V
Rated voltage conductor - conductor	400 V
Rated impulse voltage	4 kV
Pollution degree	3
alternative electrical data	**10 A 250 V 4 kV 3**
Rated voltage acc. to UL	600 V
Insulation resistance	≥10^{10} Ohm
Limiting temperatures	-40 °C ... 125 °C
Flammability (insert) acc. to UL 94	V 0
Mating cycles	≥500
Tightening torque	0.25 Nm
Flammability (seal) acc. to UL 94	V 0
Degree of protection acc. to IEC 60529	IP65 / IP67
Material (insert)	polycarbonate
Colour (insert)	RAL 7032 (light grey)

Specifications and approvals

IEC 60664-1
IEC 61984

Number of contacts

3+ ⏚

230/400 V
10 A

Identification	Wire cross section (mm²)	Part number male	Part number female	Drawing Dimensions in mm
Han-Quick Lock® Han A® , Han-Quick Lock® termination Blue slide	0.5 – 2.5	09 20 003 2633	09 20 003 2733	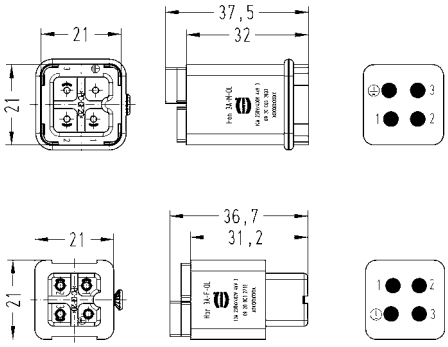
Han-Quick Lock® Han A® , Han-Quick Lock® termination Black slide	0.25 – 1.5	09 20 003 2634	09 20 003 2734	
Han A® , Screw terminal 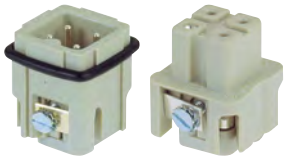	0.75 – 1.5	09 20 003 2611	09 20 003 2711	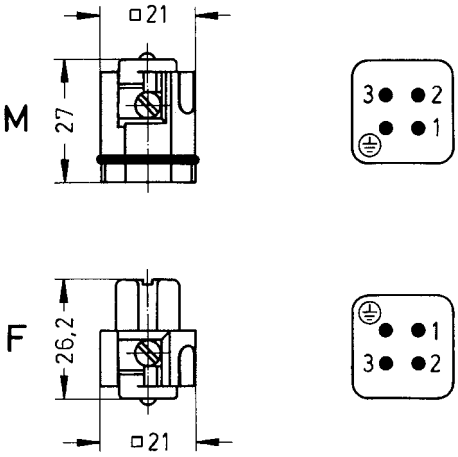 Contact arrangement (view from termination side)

Han A

Number of contacts

4+ ⏚

230/400 V
10 A

Identification	Wire cross section (mm²)	Part number male	Part number female	Drawing Dimensions in mm
Han-Quick Lock® Han A® , Han-Quick Lock® termination Blue slide	0.5 – 2.5	09 20 004 2633	09 20 004 2733	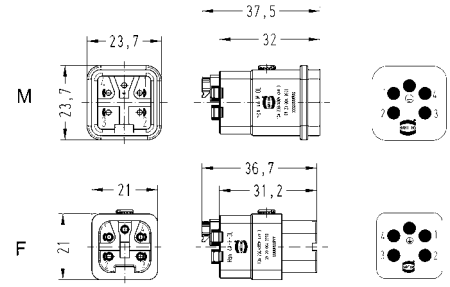 Contact arrangement (view from termination side)
Han-Quick Lock® Han A® , Han-Quick Lock® termination Black slide	0.25 – 1.5	09 20 004 2634	09 20 004 2734	
Han A® , Screw terminal 	0.75 – 1.5	09 20 004 2611	09 20 004 2711	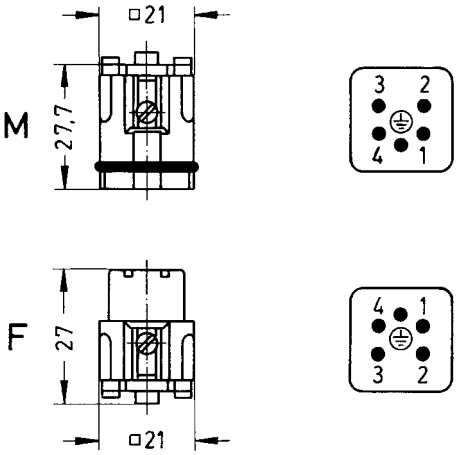 Contact arrangement (view from termination side)

Features

- Small size
- Available in crimp and screw termination
- Screw termination also available with wire protection

Derating

Current carrying capacity

The current carrying capacity of the connectors is limited by the thermal load capability of the contact element material including the connections and the insulating parts. The derating curve is therefore valid for currents which flow constantly (non-intermittent) through each contact element of the connector evenly, without exceeding the allowed maximum temperature.

Measuring and testing techniques acc. to IEC 60512-5-2

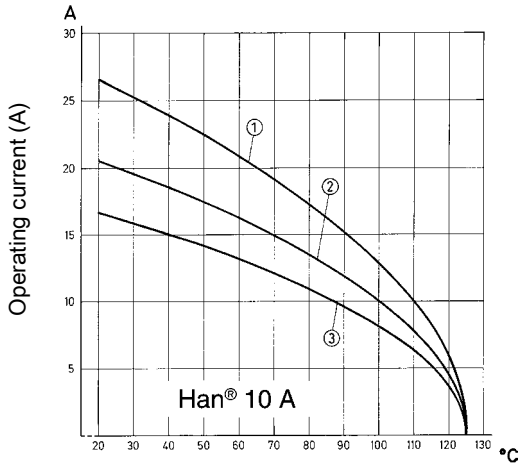

Ambient temperature (C°)

① Wire cross section 2.5 mm²
② Wire cross section 1.5 mm²
③ Wire cross section 1 mm²

Derating

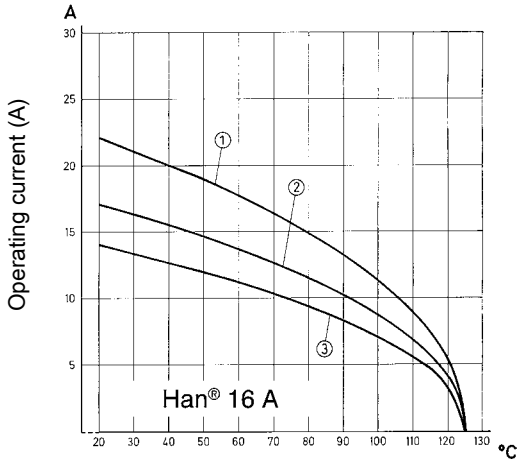

Ambient temperature (C°)

① Wire cross section 2.5 mm²
② Wire cross section 1.5 mm²
③ Wire cross section 1 mm²

Technical characteristics

Contacts	10, 16, 32
Electrical data acc. to IEC 61984	**16 A 250 V 4 kV 3**
Rated current	16 A
Rated voltage	250 V
Rated impulse voltage	4 kV
Pollution degree	3
Rated voltage acc. to UL	600 V
Insulation resistance	≥10^{10} Ohm
Limiting temperatures	-40 °C ... 125 °C
Flammability (insert) acc. to UL 94	V 0
Mating cycles	≥500
Tightening torque	0.5 Nm
Material (insert)	polycarbonate
Colour (insert)	RAL 7032 (light grey)
Material (contact)	copper alloy

Specifications and approvals

IEC 60664-1
IEC 61984

Han A

Number of contacts

10+ ⏚

250 V
16 A

Identification	Wire cross section (mm²)	Part number male	Part number female	Drawing Dimensions in mm
Han A®, Crimp terminal 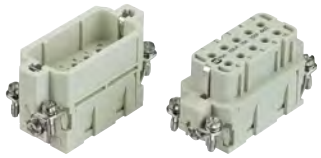 Please order crimp contacts separately.		09 20 010 3001	09 20 010 3101	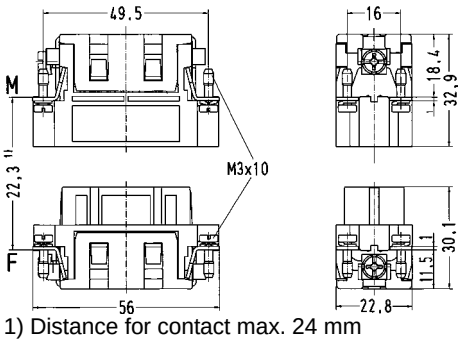 1) Distance for contact max. 24 mm
Han A®, Screw terminal	0.75 – 2.5	09 20 010 2612	09 20 010 2812	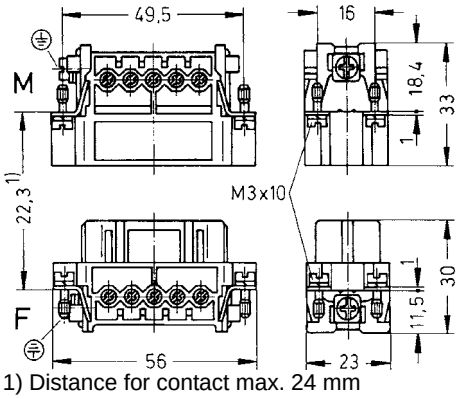 1) Distance for contact max. 24 mm
Han A®, Screw terminal, with wire protection	0.75 – 2.5	09 20 010 2614	09 20 010 2814	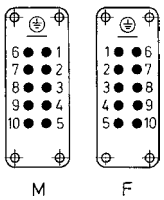 Contact arrangement (view from termination side) 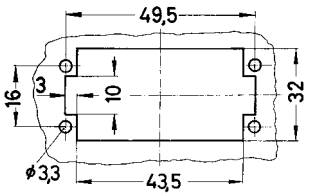 Panel cut out for inserts for use without hoods/housings

Number of contacts

16+ ⏚

250 V
16 A

Identification	Wire cross section (mm²)	Part number male	Part number female	Drawing Dimensions in mm
Han A®, Crimp terminal Please order crimp contacts separately.		09 20 016 3001	09 20 016 3101	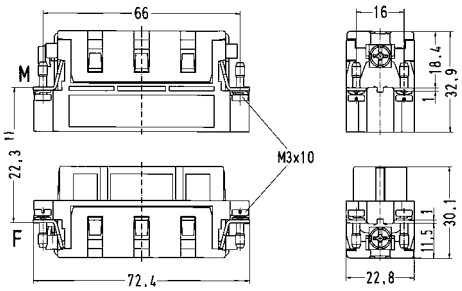 1) Distance for contact max. 24 mm
Han A®, Screw terminal 	0.75 – 2.5	09 20 016 2612	09 20 016 2812	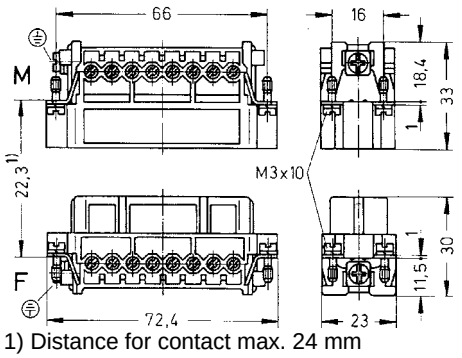 1) Distance for contact max. 24 mm
Han A®, Screw terminal, with wire protection 	0.75 – 2.5	09 20 016 2614	09 20 016 2814	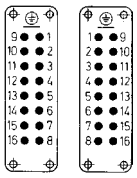 Contact arrangement (view from termination side) 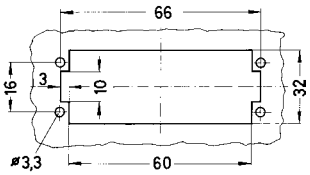 Panel cut out for inserts for use without hoods/housings

Han A

Number of contacts

32+ ⏚

250 V
16 A

Identification	Part number male	Part number female	Drawing Dimensions in mm
Han A® , Crimp terminal, 1 - 16 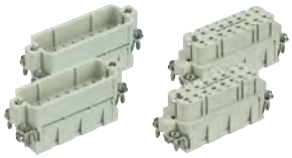 Please order crimp contacts separately. Please order two inserts for a complete assembly!	09 20 016 3001	09 20 016 3101	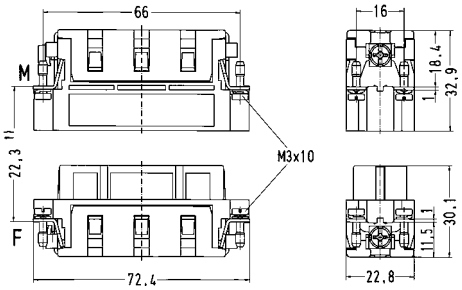 1) Distance for contact max. 24 mm
Han A® , Crimp terminal, 17 - 32 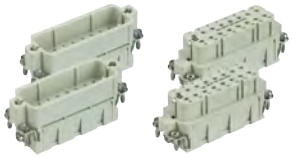 Please order crimp contacts separately. Please order two inserts for a complete assembly!	09 20 016 3011	09 20 016 3111	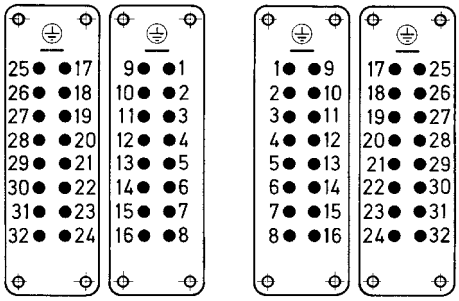 Contact arrangement (view from termination side) 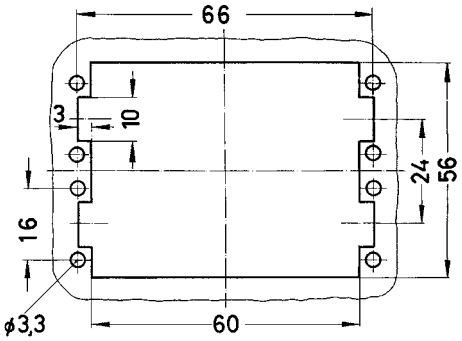 Panel cut out for inserts for use without hoods/housings

Number of contacts

32+ ⏚

250 V
16 A

Identification	Wire cross section (mm²)	Part number male	Part number female	Drawing Dimensions in mm
Han A®, Screw terminal, 1 - 16, contact resistance ≤1 mOhm Please order two inserts for a complete assembly!	0.75 – 2.5	09 20 016 2612	09 20 016 2812	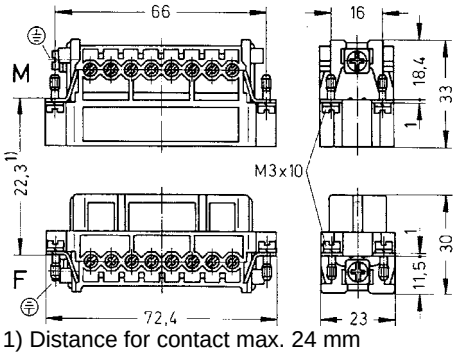 1) Distance for contact max. 24 mm
Han A®, Screw terminal, 17 - 32, contact resistance ≤1 mOhm Please order two inserts for a complete assembly!	0.75 – 2.5	09 20 016 2613	09 20 016 2813	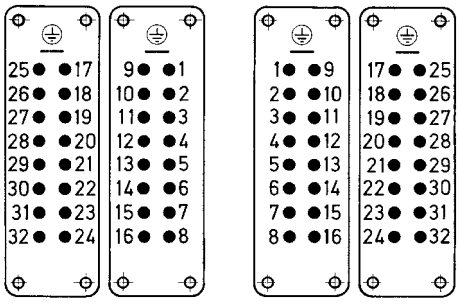 Contact arrangement (view from termination side) 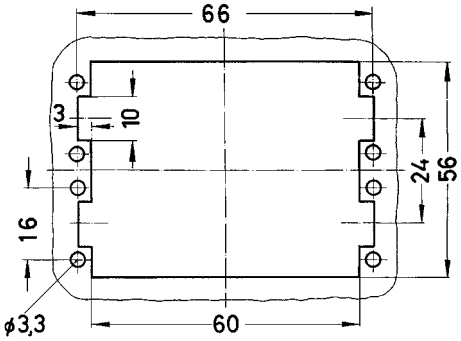 Panel cut out for inserts for use without hoods/housings

Identification	Wire cross section (mm²)	Part number male	Part number female	Drawing Dimensions in mm
Han A®, Screw terminal, 1 - 16, with wire protection, contact resistance ≤1 mOhm Please order two inserts for a complete assembly!	0.75 – 2.5	09 20 016 2614	09 20 016 2814	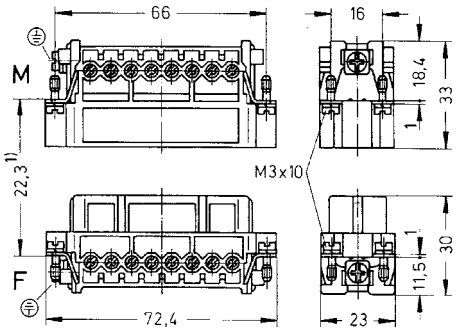 1) Distance for contact max. 24 mm
Han A®, Screw terminal, 17 - 32, with wire protection, contact resistance ≤1 mOhm Please order two inserts for a complete assembly!	0.75 – 2.5	09 20 016 2615	09 20 016 2815	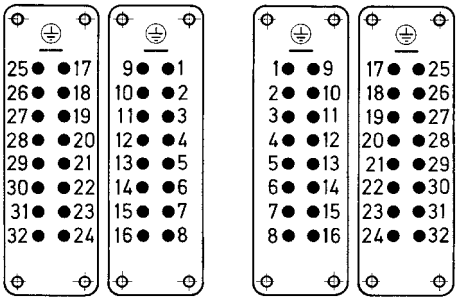 Contact arrangement (view from termination side) 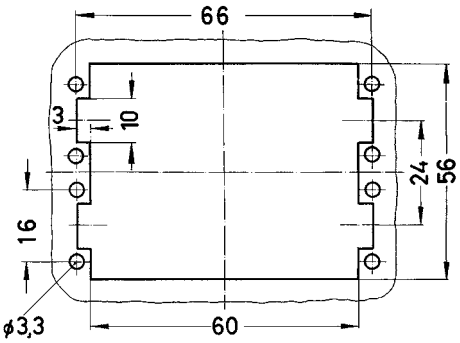 Panel cut out for inserts for use without hoods/housings

Technical characteristics

Material (contact) copper alloy

Details

Crimping tools see chapter 90

Remarks on the crimp technique

The wire gauges mentioned in the catalogue refer to geometric wire gauges of cables.

Identification	Wire cross section (mm²)	Part number male	Part number female	Drawing Dimensions in mm
Han E®, Crimp contact, gold plated contacts, contact resistance ≤1 mOhm	0.14 – 0.37 0.5 0.75 1 1.5 2.5 4	09 33 000 6117 09 33 000 6122 09 33 000 6115 09 33 000 6118 09 33 000 6116 09 33 000 6123 09 33 000 6119	09 33 000 6217 09 33 000 6222 09 33 000 6215 09 33 000 6218 09 33 000 6216 09 33 000 6223 09 33 000 6221	
Han E®, Crimp contact, silver plated contacts, contact resistance ≤1 mOhm	0.14 – 0.37 0.5 0.75 1 1.5 2.5 3 4	09 33 000 6127 09 33 000 6121 09 33 000 6114 09 33 000 6105 09 33 000 6104 09 33 000 6102 09 33 000 6106 09 33 000 6107	09 33 000 6227 09 33 000 6220 09 33 000 6214 09 33 000 6205 09 33 000 6204 09 33 000 6202 09 33 000 6206 09 33 000 6207	

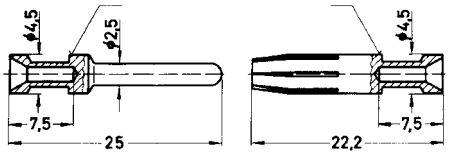

Identification	Wire gauge		Stripping length
no groove	0.14-0.37 mm²	AWG 26-22	7.5 mm
no groove	0.5 mm²	AWG 20	7.5 mm
1 groove*	0.75 mm²	AWG 18	7.5 mm
1 groove	1 mm²	AWG 18	7.5 mm
2 grooves	1.5 mm²	AWG 16	7.5 mm
3 grooves	2.5 mm²	AWG 14	7.5 mm
wide groove	3 mm²	AWG 12	7.5 mm
no groove	4 mm²	AWG 12	7.5 mm

* on the back crimp collar

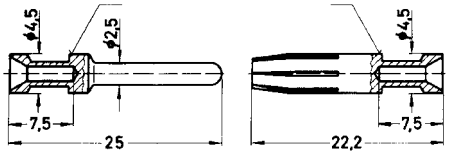

Identification	Wire gauge		Stripping length
no groove	0.14-0.37 mm²	AWG 26-22	7.5 mm
no groove	0.5 mm²	AWG 20	7.5 mm
1 groove*	0.75 mm²	AWG 18	7.5 mm
1 groove	1 mm²	AWG 18	7.5 mm
2 grooves	1.5 mm²	AWG 16	7.5 mm
3 grooves	2.5 mm²	AWG 14	7.5 mm
wide groove	3 mm²	AWG 12	7.5 mm
no groove	4 mm²	AWG 12	7.5 mm

* on the back crimp collar

Wind turbine by ENERCON with Han® 3 A – for a fast and reliable installation.

Contents | Page

Han® 7 D	**02.2**
Han® 8 D	**02.4**
Han® 15-128 D	**02.6**
Contacts Han D®	**02.14**
Han DD®	**02.16**
Contacts Han DD®	**02.23**

Features

- Innovative Han-Quick Lock® termination technology with reduced wiring times
- Time saving rapid termination by use of crimping contacts
- For requirements up to 250 V / 10 A
- Gold and silver contacts available
- Suitable for thermo- and 1 mm F.O. contacts

Derating

Current carrying capacity

The current carrying capacity of the connectors is limited by the thermal load capability of the contact element material including the connections and the insulating parts. The derating curve is therefore valid for currents which flow constantly (non-intermittent) through each contact element of the connector evenly, without exceeding the allowed maximum temperature.

Measuring and testing techniques acc. to IEC 60512-5-2

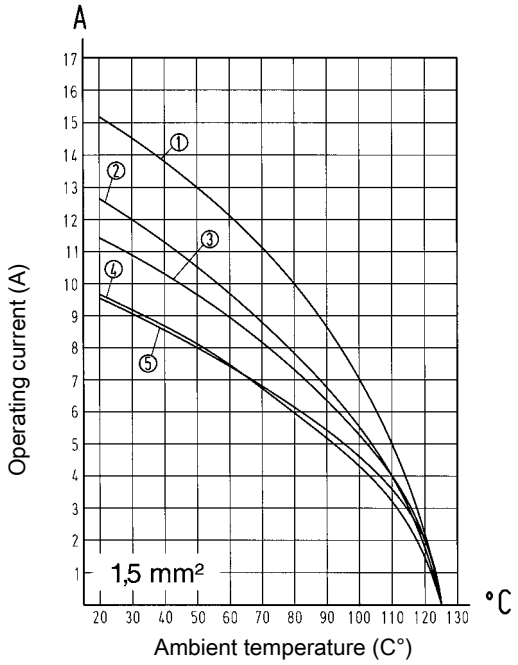

① Han® 7 D
② Han® 15 D
③ Han® 25 D
④ Han® 40 D
⑤ Han® 64 D

Derating

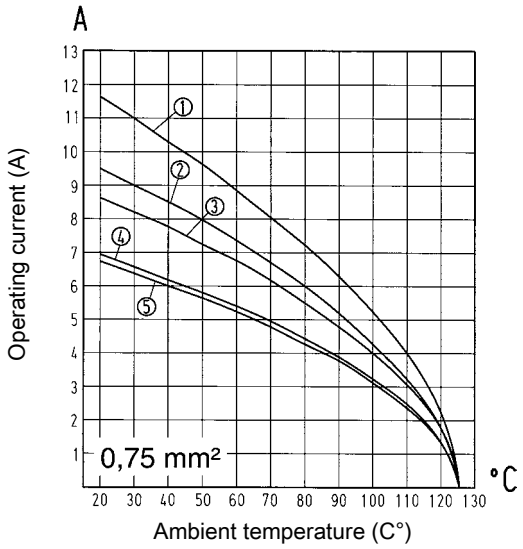

① Han® 7 D
② Han® 15 D
③ Han® 25 D
④ Han® 40 D
⑤ Han® 64 D

Technical characteristics

Contacts	7
Electrical data acc. to IEC 61984	**10 A 250 V 4 kV 3**
Rated current	10 A
Rated voltage	250 V
Rated impulse voltage	4 kV
Pollution degree	3
Rated voltage acc. to UL	600 V
Insulation resistance	≥10^{10} Ohm
Limiting temperatures	-40 °C ... 125 °C
Flammability (insert) acc. to UL 94	HB
Mating cycles	≥500
Material (insert)	polyamide
Colour (insert)	RAL 7032 (light grey)
Material (seal)	NBR
Material (contact)	copper alloy

Specifications and approvals

IEC 60664-1
IEC 61984
EN 175301-801

Number of contacts

7+ ⏚

250 V
10 A

Identification	Wire cross section (mm²)	Part number male	Part number female	Drawing Dimensions in mm
Han-Quick Lock® Han D®, Han-Quick Lock® termination, silver plated contacts, contact resistance ≤3 mOhm only for thermoplastic hoods/ housings	0.25 – 1.5	09 21 007 2632	09 21 007 2732	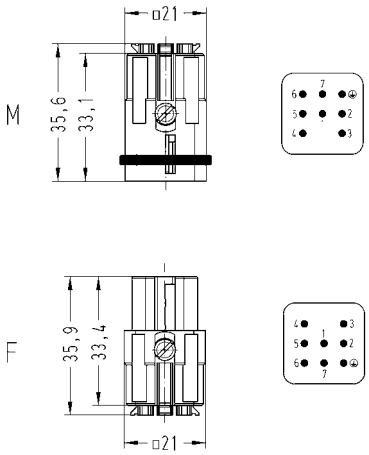 Contact arrangement (view from termination side)
Han D®, Crimp terminal Please order crimp contacts separately. only for thermoplastic hoods/ housings		09 21 007 3031	09 21 007 3131	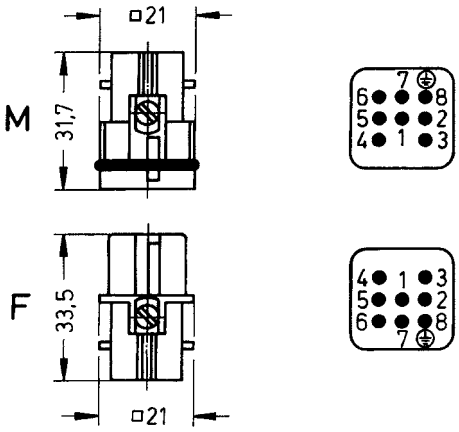 Contact arrangement (view from termination side)

Features

- Innovative Han-Quick Lock® termination technology with reduced wiring times
- Time saving rapid termination by use of crimping contacts
- Gold and silver contacts available
- Insert suitable for metal hoods and housings size Han® 3 A
- High density of contacts

Technical characteristics

Contacts	8
Electrical data acc. to IEC 61984	**10 A 50 V 0.8 kV 3**
Rated current	10 A
Rated voltage	50 V
Rated impulse voltage	0.8 kV
Pollution degree	3
Rated voltage AC	50 V
Rated voltage DC	120 V
Rated voltage acc. to UL	50 V
Rated voltage acc. to CSA	50 V
Insulation resistance	≥10^{10} Ohm
Limiting temperatures	-40 °C ... 125 °C
Flammability (insert) acc. to UL 94	HB
Mating cycles	≥500
Material (insert)	polyamide
Colour (insert)	RAL 7032 (light grey)
Material (seal)	NBR
Material (contact)	copper alloy

Specifications and approvals

IEC 60664-1
IEC 61984
EN 175301-801

Number of contacts

8

~ 50 V
- 120 V
50 V
10 A

Identification	Wire cross section (mm²)	Part number male	Part number female	Drawing Dimensions in mm
Han-Quick Lock® Han D®, Han-Quick Lock® termination, silver plated contacts, contact resistance ≤3 mOhm for thermoplastics and metal hoods/housings	0.25 – 1.5	09 36 008 2632	09 36 008 2732	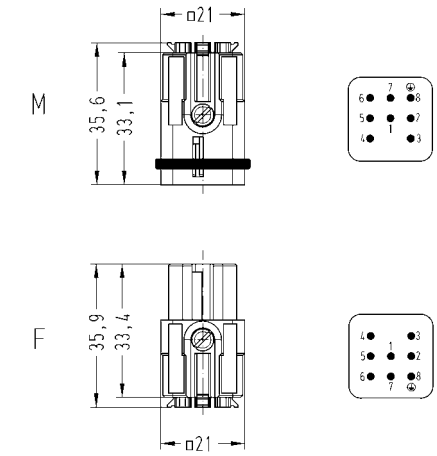 Contact arrangement (view from termination side)
Han D®, Crimp terminal Please order crimp contacts separately. for thermoplastics and metal hoods/housings		09 36 008 3001	09 36 008 3101	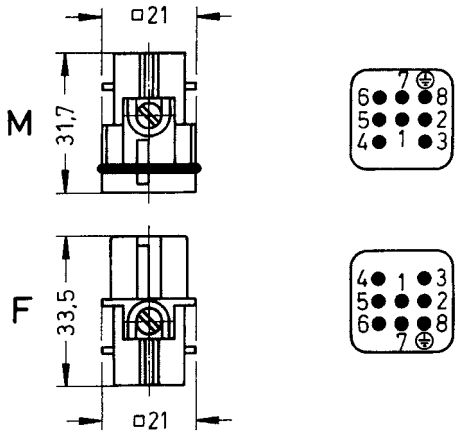 Contact arrangement (view from termination side)

Features

- High density of contacts
- For requirements up to 250 V / 10 A
- Time saving rapid termination by use of crimping contacts
- Gold and silver contacts available
- Suitable for thermo- and 1 mm F.O. contacts

Derating

Current carrying capacity

The current carrying capacity of the connectors is limited by the thermal load capability of the contact element material including the connections and the insulating parts. The derating curve is therefore valid for currents which flow constantly (non-intermittent) through each contact element of the connector evenly, without exceeding the allowed maximum temperature.

Measuring and testing techniques acc. to IEC 60512-5-2

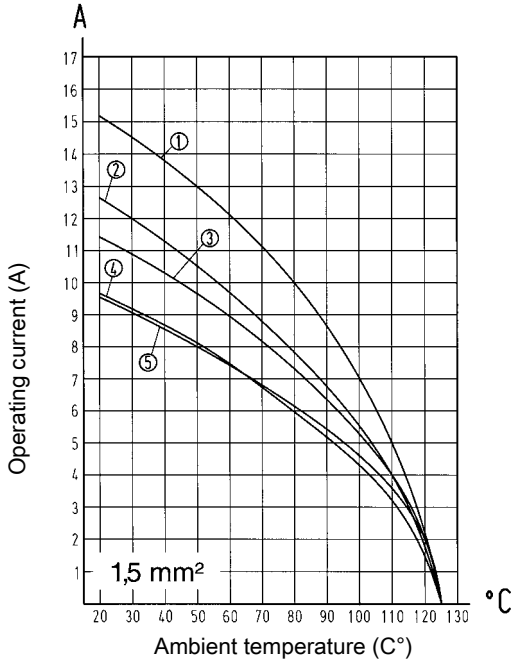

① Han® 7 D
② Han® 15 D
③ Han® 25 D
④ Han® 40 D
⑤ Han® 64 D

Derating

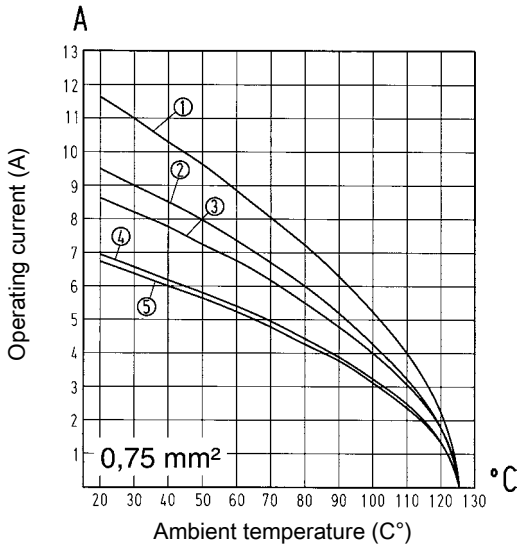

① Han® 7 D
② Han® 15 D
③ Han® 25 D
④ Han® 40 D
⑤ Han® 64 D

Technical characteristics

Contacts	15, 25, 40, 50, 64, 80, 128
Electrical data acc. to IEC 61984	**10 A 250 V 4 kV 3**
Rated current	10 A
Rated voltage	250 V
Rated impulse voltage	4 kV
Pollution degree	3
Rated voltage acc. to UL	600 V
Rated voltage acc. to CSA	600 V
Insulation resistance	≥10^{10} Ohm
Limiting temperatures	-40 °C ... 125 °C
Flammability (insert) acc. to UL 94	HB, V 0
Mating cycles	≥500
Material (insert)	polyamide, polycarbonate
Colour (insert)	RAL 7032 (light grey)
Dimensions wire wrap post	1 x 1 mm, length 22 mm
Material (contact)	copper alloy

Specifications and approvals

IEC 60664-1
IEC 61984
EN 175301-801

Details

Han® 40 and 64 D made of polycarbonate (flammability acc. to UL 94: V 0)

ATTENTION! Guide pins and bushes are prescribed (see chapter 80).

Number of contacts

15+ ⏚

250 V
10 A

Identification	Part number male	Part number female	Drawing Dimensions in mm
Han D®, Crimp terminal Please order crimp contacts separately.	09 21 015 3001	09 21 015 3101	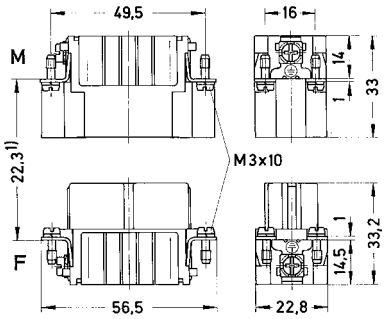 1) Distance for contact max. 24 mm
Han D®, Wrap terminal, contact resistance ≤3 mOhm 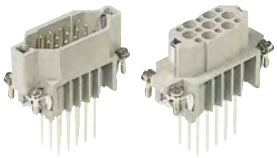	09 21 015 2601	09 21 015 2701	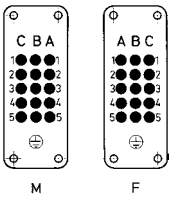 Contact arrangement (view from termination side) 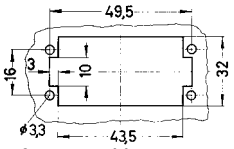 Panel cut out for inserts for use without hoods/housings

Number of contacts

25+ ⏚

250 V
10 A

Identification	Part number male	Part number female	Drawing Dimensions in mm
Han D®, Crimp terminal Please order crimp contacts separately.	09 21 025 3001	09 21 025 3101	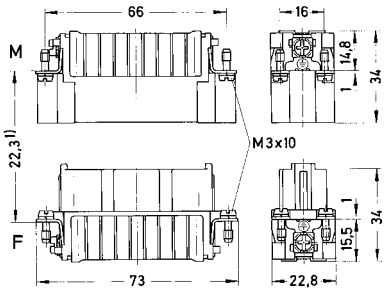 1) Distance for contact max. 24 mm
Han D®, Wrap terminal, contact resistance ≤3 mOhm 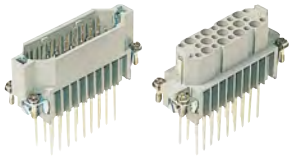	09 21 025 2601	09 21 025 2701	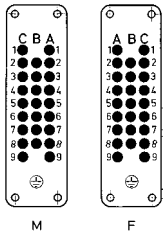 Contact arrangement (view from termination side) 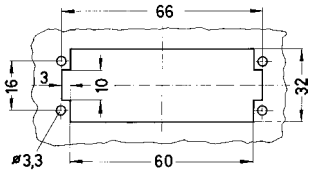 Panel cut out for inserts for use without hoods/housings

Number of contacts

40+ ⏚

250 V
10 A

Identification	Part number male	Part number female	Drawing Dimensions in mm
Han D®, Crimp terminal Please order crimp contacts separately.	09 21 040 3001	09 21 040 3101	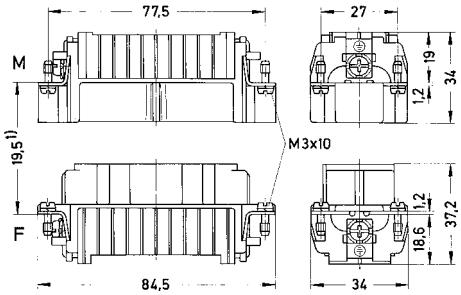 1) Distance for contact max. 21 mm
Han D®, Wrap terminal, contact resistance ≤3 mOhm 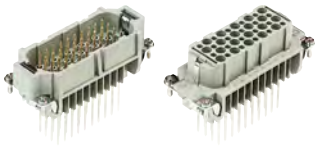	09 21 040 2601	09 21 040 2701	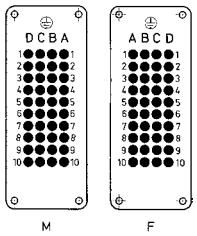 Contact arrangement (view from termination side) 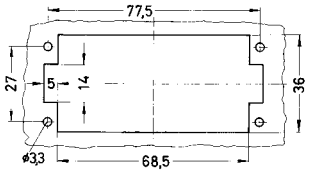 Panel cut out for inserts for use without hoods/housings

Number of contacts

50+ ⏚

250 V
10 A

Identification	Part number male	Part number female	Drawing Dimensions in mm
Han D®, Crimp terminal Please order crimp contacts separately. Please order two inserts for a complete assembly!	09 21 025 3001	09 21 025 3101	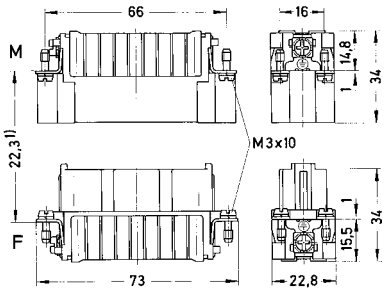 1) Distance for contact max. 24 mm
Han D®, Wrap terminal, contact resistance ≤3 mOhm 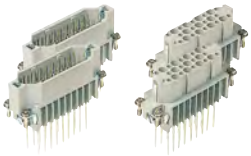 Please order two inserts for a complete assembly!	09 21 025 2601	09 21 025 2701	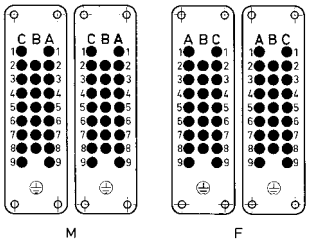 Contact arrangement (view from termination side) 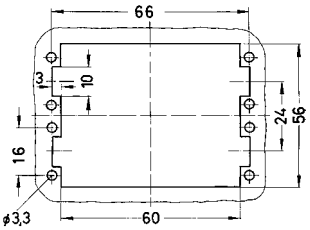 Panel cut out for inserts for use without hoods/housings

Number of contacts

64+ ⏚

250 V
10 A

Identification	Part number male	Part number female	Drawing Dimensions in mm
Han D®, Crimp terminal Please order crimp contacts separately.	09 21 064 3001	09 21 064 3101	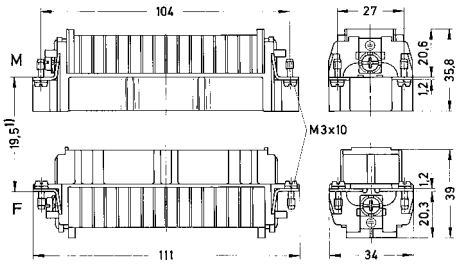 1) Distance for contact max. 21 mm
Han D®, Wrap terminal, contact resistance ≤3 mOhm 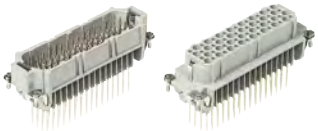	09 21 064 2601	09 21 064 2701	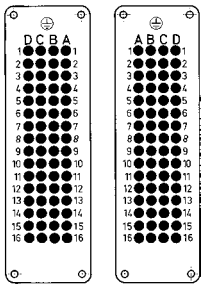 Contact arrangement (view from termination side) 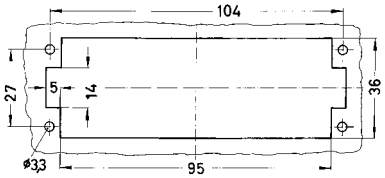 Panel cut out for inserts for use without hoods/housings

Number of contacts

80+ ⏚

250 V
10 A

Identification	Part number male	Part number female	Drawing Dimensions in mm
Han D®, Crimp terminal Please order crimp contacts separately. Please order two inserts for a complete assembly!	09 21 040 3001	09 21 040 3101	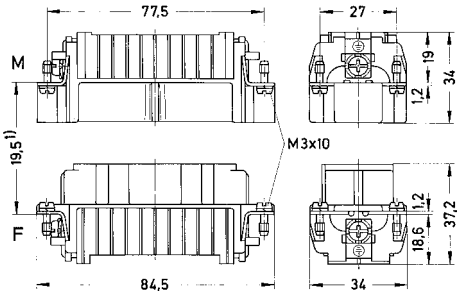 1) Distance for contact max. 21 mm
Han D®, Wrap terminal, contact resistance ≤3 mOhm Please order two inserts for a complete assembly!	09 21 040 2601	09 21 040 2701	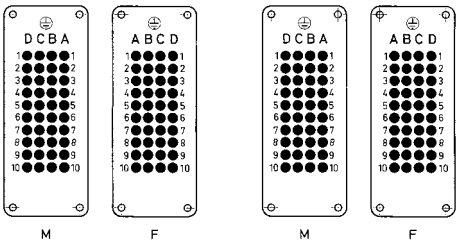 Contact arrangement (view from termination side) 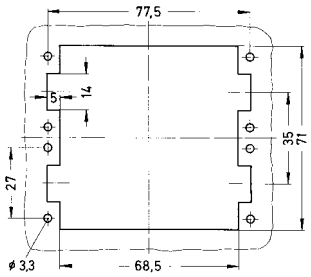 Panel cut out for inserts for use without hoods/housings

Number of contacts

128+ ⏚

250 V
10 A

Identification	Part number male	Part number female	Drawing Dimensions in mm
Han D®, Crimp terminal 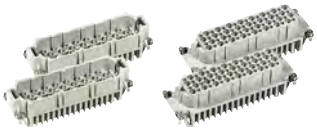 Please order crimp contacts separately. Please order two inserts for a complete assembly!	09 21 064 3001	09 21 064 3101	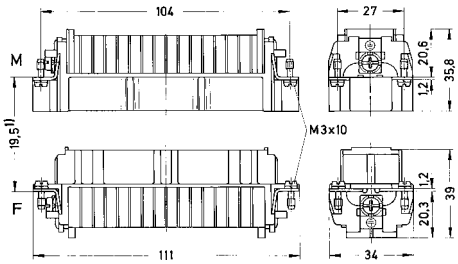 1) Distance for contact max. 21 mm
Han D®, Wrap terminal, contact resistance ≤3 mOhm Please order two inserts for a complete assembly!	09 21 064 2601	09 21 064 2701	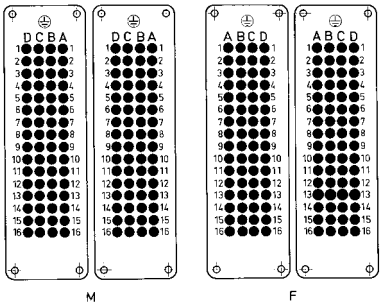 Contact arrangement (view from termination side) 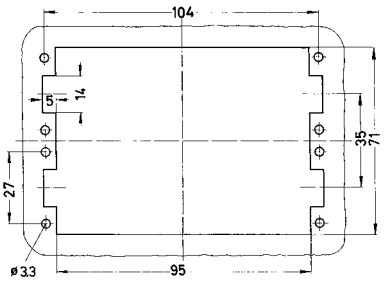 Panel cut out for inserts for use without hoods/housings

Technical characteristics

Material (contact)	copper alloy

Specifications and approvals

IEC 60664-1
IEC 61984

Details

Crimping tools see chapter 90

Remarks on the crimp technique

The wire gauges mentioned in the catalogue refer to geometric wire gauges of cables.

Coding pin

Use of the coding pin prevents incorrect mating to other connectors of the same type. The male pin should be omitted from the opposing cavity in the male insert.

Identification	Wire cross section (mm²)	Part number male	Part number female	Drawing Dimensions in mm
Han D®, Crimp contact, gold plated contacts, contact resistance ≤3 mOhm	0.14 – 0.37 0.5 0.75 1 1.5 2.5	09 15 000 6124 09 15 000 6123 09 15 000 6125 09 15 000 6122 09 15 000 6121 09 15 000 6126	09 15 000 6224 09 15 000 6223 09 15 000 6225 09 15 000 6222 09 15 000 6221 09 15 000 6226	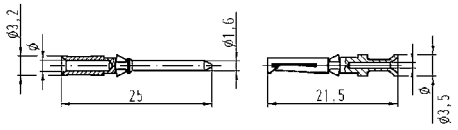
Han D®, Crimp contact, silver plated contacts, contact resistance ≤3 mOhm	0.14 – 0.37 0.5 0.75 1 1.5 2.5	09 15 000 6104 09 15 000 6103 09 15 000 6105 09 15 000 6102 09 15 000 6101 09 15 000 6106	09 15 000 6204 09 15 000 6203 09 15 000 6205 09 15 000 6202 09 15 000 6201 09 15 000 6206	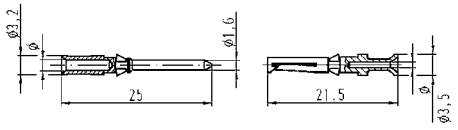
F.O. contact for 1 mm plastic fibre		20 10 001 3212 20 10 001 3213	20 10 001 3222	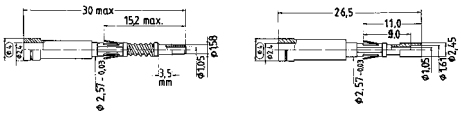 20 10 001 3212 + 20 10 001 3222 for Han® 7 D, Han® 8 D, Han® 40 D, Han® 64 D, Han® 80 D, Han® 128 D 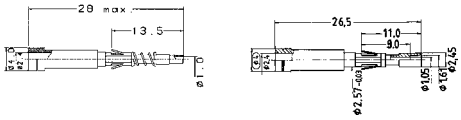 20 10 001 3213 + 20 10 001 3222 for Han® 15 D, Han® 25 D, Han® 50 D

Wire gauge		⌀	Stripping length
0.14-0.37 mm²	AWG 26-22	0.9 mm	8 mm
0.5 mm²	AWG 20	1.1 mm	8 mm
0.75 mm²	AWG 18	1.3 mm	8 mm
1 mm²	AWG 18	1.45 mm	8 mm
1.5 mm²	AWG 16	1.75 mm	8 mm
2.5 mm²	AWG 14	2.25 mm	6 mm

Wire gauge		⌀	Stripping length
0.14-0.37 mm²	AWG 26-22	0.9 mm	8 mm
0.5 mm²	AWG 20	1.1 mm	8 mm
0.75 mm²	AWG 18	1.3 mm	8 mm
1 mm²	AWG 18	1.45 mm	8 mm
1.5 mm²	AWG 16	1.75 mm	8 mm
2.5 mm²	AWG 14	2.25 mm	6 mm

Identification	Wire cross section (mm²)	Part number male	Part number female	Drawing Dimensions in mm
Han D®, Han DD®, Coding pin, plastic only for crimp termination with loss of one contact			09 33 000 9915	

Features

- High density of contacts
- For requirements up to 250 V / 10 A
- Time saving rapid termination by use of crimping contacts
- Gold and silver contacts available
- Suitable for thermo- and 1 mm F.O. contacts

Derating

Current carrying capacity

The current carrying capacity of the connectors is limited by the thermal load capability of the contact element material including the connections and the insulating parts. The derating curve is therefore valid for currents which flow constantly (non-intermittent) through each contact element of the connector evenly, without exceeding the allowed maximum temperature.

Measuring and testing techniques acc. to IEC 60512-5-2

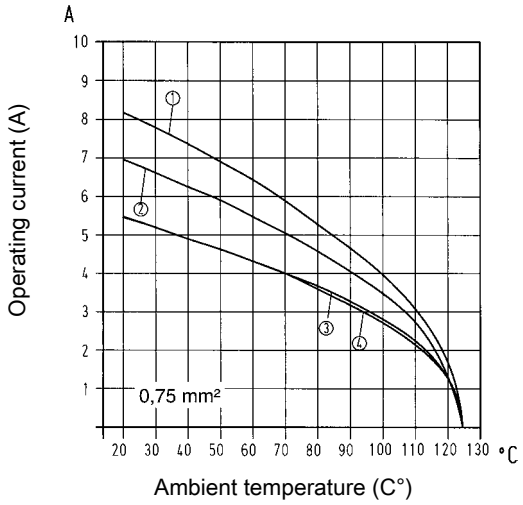

① Han® 24 DD
② Han® 42 DD
③ Han® 72 DD
④ Han® 108 DD

Derating

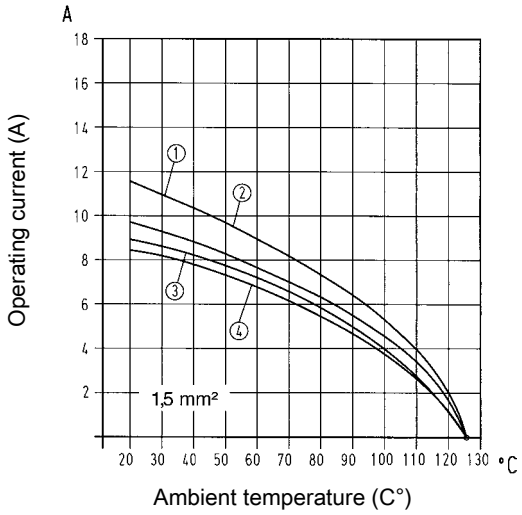

① Han® 24 DD
② Han® 42 DD
③ Han® 72 DD
④ Han® 108 DD

Technical characteristics

Contacts	24, 42, 72, 108, 144, 216
Electrical data acc. to IEC 61984	**10 A 250 V 4 kV 3**
Rated current	10 A
Rated voltage	250 V
Rated impulse voltage	4 kV
Pollution degree	3
Rated voltage acc. to UL	600 V
Rated voltage acc. to CSA	600 V
Insulation resistance	≥10^{10} Ohm
Limiting temperatures	-40 °C ... 125 °C
Flammability (insert) acc. to UL 94	V 0
Mating cycles	≥500
Material (insert)	polycarbonate
Colour (insert)	RAL 7032 (light grey)

Specifications and approvals

IEC 60664-1
IEC 61984

Details

Guide pins and bushes are recommended (see chapter 80).

Number of contacts

24+ ⏚

250 V
10 A

Identification	Part number male	Part number female	Drawing Dimensions in mm
Han DD®, Crimp terminal Please order crimp contacts separately.	09 16 024 3001	09 16 024 3101	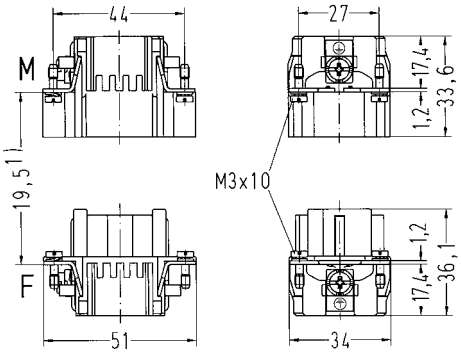 1) Distance for contact max. 21 mm 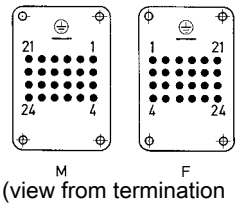 Contact arrangement (view from termination side) 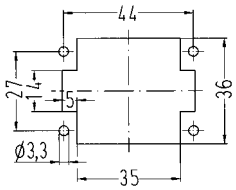 Panel cut out for inserts for use without hoods/housings

Number of contacts

42+ ⏚

250 V
10 A

Identification	Part number male	Part number female	Drawing Dimensions in mm
Han DD®, Crimp terminal Please order crimp contacts separately.	09 16 042 3001	09 16 042 3101	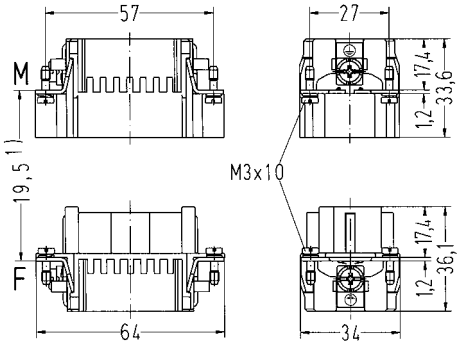 1) Distance for contact max. 21 mm 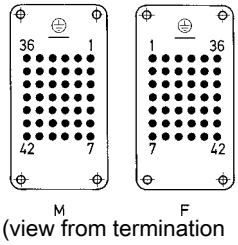 Contact arrangement (view from termination side) 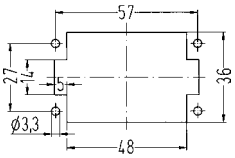 Panel cut out for inserts for use without hoods/housings

Number of contacts

72+ ⏚

250 V
10 A

Identification	Part number male	Part number female	Drawing Dimensions in mm
Han DD®, Crimp terminal Please order crimp contacts separately.	09 16 072 3001	09 16 072 3101	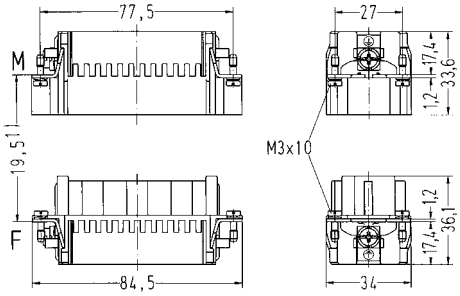 1) Distance for contact max. 21 mm 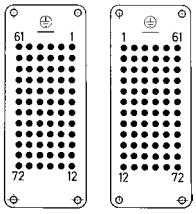 Contact arrangement (view from termination side) 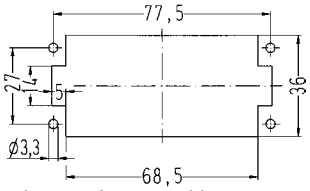 Panel cut out for inserts for use without hoods/housings		

Number of contacts

108+ ⏚

250 V
10 A

Identification	Part number male	Part number female	Drawing Dimensions in mm
Han DD®, Crimp terminal Please order crimp contacts separately.	09 16 108 3001	09 16 108 3101	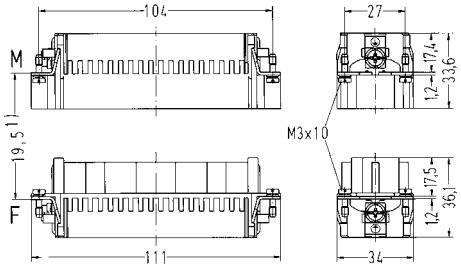 1) Distance for contact max. 21 mm 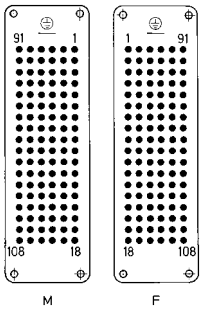 Contact arrangement (view from termination side) 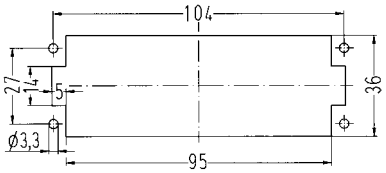 Panel cut out for inserts for use without hoods/housings

Number of contacts

144+ ⏚

250 V
10 A

Identification	Part number male	Part number female	Drawing Dimensions in mm
Han DD®, Crimp terminal, 1 - 72 Please order crimp contacts separately. Please order two inserts for a complete assembly!	09 16 072 3001	09 16 072 3101	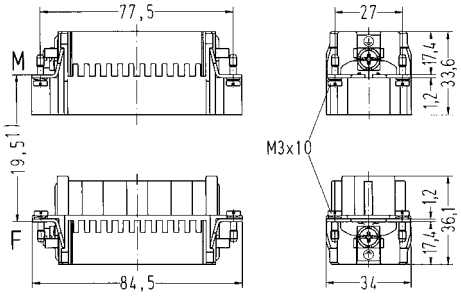 1) Distance for contact max. 21 mm
Han DD®, Crimp terminal, 73 - 144 Please order crimp contacts separately. Please order two inserts for a complete assembly!	09 16 072 3011	09 16 072 3111	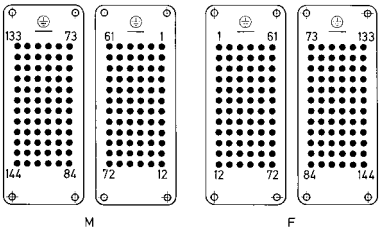 Contact arrangement (view from termination side) 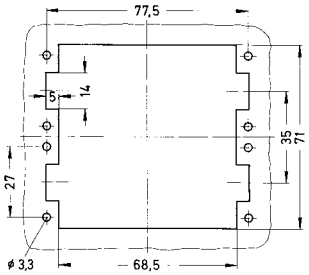 Panel cut out for inserts for use without hoods/housings

Number of contacts

216+ ⏚

250 V
10 A

Identification	Part number male	Part number female	Drawing Dimensions in mm
Han DD®, Crimp terminal, 1 - 108 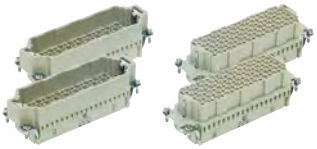 Please order crimp contacts separately. Please order two inserts for a complete assembly!	09 16 108 3001	09 16 108 3101	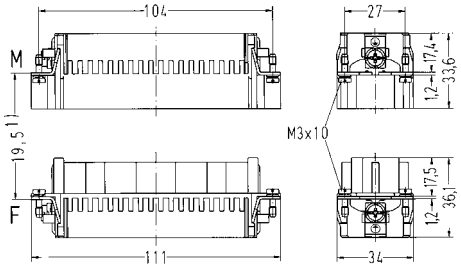 1) Distance for contact max. 21 mm
Han DD®, Crimp terminal, 109 - 216 Please order crimp contacts separately. Please order two inserts for a complete assembly!	09 16 108 3011	09 16 108 3111	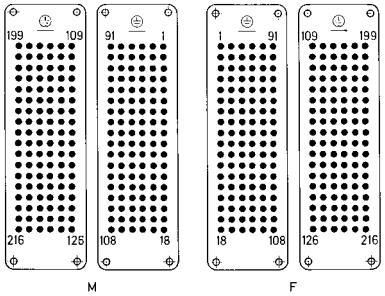 Contact arrangement (view from termination side) 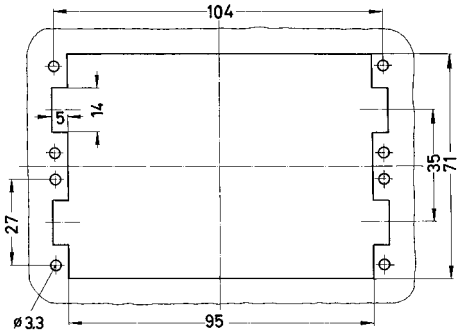 Panel cut out for inserts for use without hoods/housings

Technical characteristics

Material (contact)	copper alloy

Specifications and approvals

IEC 60664-1
IEC 61984

Details

Crimping tools see chapter 90

Remarks on the crimp technique

The wire gauges mentioned in the catalogue refer to geometric wire gauges of cables.

Coding pin

Use of the coding pin prevents incorrect mating to other connectors of the same type. The male pin should be omitted from the opposing cavity in the male insert.

Identification	Wire cross section (mm²)	Part number male	Part number female	Drawing Dimensions in mm
Han D®, Crimp contact, gold plated contacts, contact resistance ≤3 mOhm	0.14 – 0.37 0.5 0.75 1 1.5 2.5	09 15 000 6124 09 15 000 6123 09 15 000 6125 09 15 000 6122 09 15 000 6121 09 15 000 6126	09 15 000 6224 09 15 000 6223 09 15 000 6225 09 15 000 6222 09 15 000 6221 09 15 000 6226	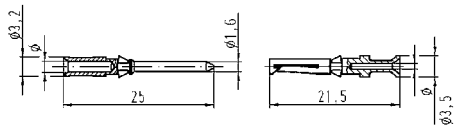
Han D®, Crimp contact, silver plated contacts, contact resistance ≤3 mOhm	0.14 – 0.37 0.5 0.75 1 1.5 2.5	09 15 000 6104 09 15 000 6103 09 15 000 6105 09 15 000 6102 09 15 000 6101 09 15 000 6106	09 15 000 6204 09 15 000 6203 09 15 000 6205 09 15 000 6202 09 15 000 6201 09 15 000 6206	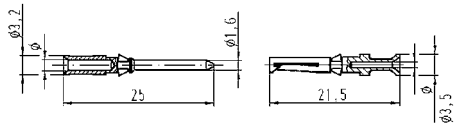
F.O. contact for 1 mm plastic fibre		20 10 001 3211	20 10 001 3221	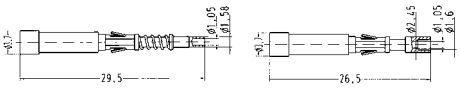 20 10 001 3211 + 20 10 001 3221
Han D®, Han DD®, Coding pin, plastic only for crimp termination with loss of one contact			09 33 000 9915	

Wire gauge		⌀	Stripping length
0.14-0.37 mm²	AWG 26-22	0.9 mm	8 mm
0.5 mm²	AWG 20	1.1 mm	8 mm
0.75 mm²	AWG 18	1.3 mm	8 mm
1 mm²	AWG 18	1.45 mm	8 mm
1.5 mm²	AWG 16	1.75 mm	8 mm
2.5 mm²	AWG 14	2.25 mm	6 mm

Wire gauge		⌀	Stripping length
0.14-0.37 mm²	AWG 26-22	0.9 mm	8 mm
0.5 mm²	AWG 20	1.1 mm	8 mm
0.75 mm²	AWG 18	1.3 mm	8 mm
1 mm²	AWG 18	1.45 mm	8 mm
1.5 mm²	AWG 16	1.75 mm	8 mm
2.5 mm²	AWG 14	2.25 mm	6 mm

Modified contact arrangement

The connector series Han DD® and Han D® equipped with all contacts may be used for voltages up to 250 V, pollution degree 3. A modified contact loading arrangement permits use up to 500 V also in the same pollution degree.

According to DIN EN 61 984 connectors should not be coupled or decoupled under electrical load.

Series Han DD®

	10 A 400 V 6 kV 3
Rated current	10 A
Rated voltage	400 V
Rated impulse voltage	6 kV
Pollution degree	3

	10 A 500 V 6 kV 3
Rated current	10 A
Rated voltage	500 V
Rated impulse voltage	6 kV
Pollution degree	3

Contact arrangement view from termination side

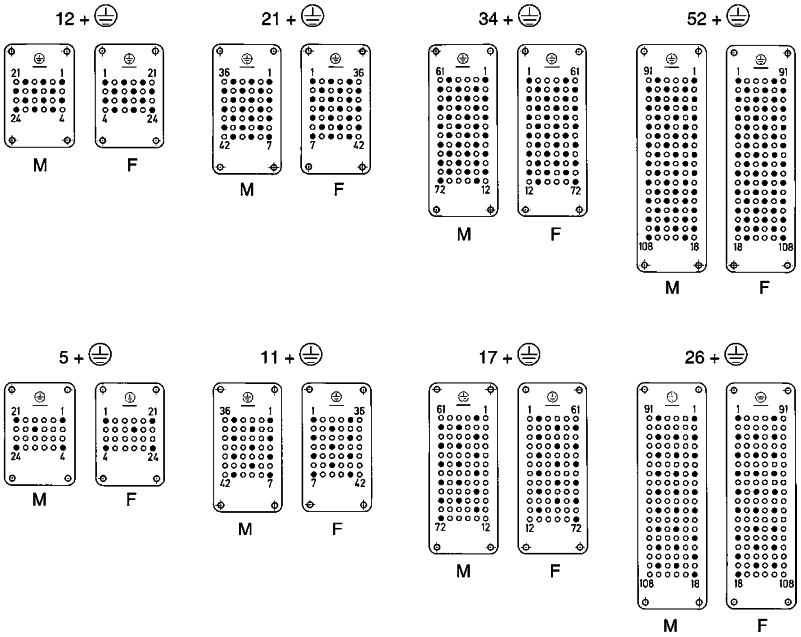

● Working contact ○ Without contact M - Male insert F - Female insert

Series Han D®

	10 A 500 V 6 kV 3
Rated current	10 A
Rated voltage	500 V
Rated impulse voltage	6 kV
Pollution degree	3

Contact arrangement view from termination side

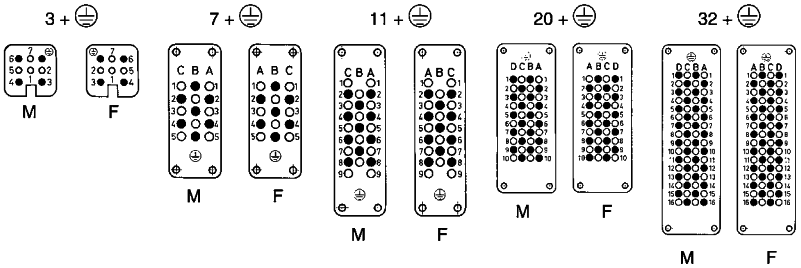

● Working contact ○ Without contact M - Male insert F - Female insert

Contents | Page

Han E®	**03.3**
Han® ES/ESS	**03.12**
Han® EE.....	**03.22**
Han® EEE	**03.29**
Contacts	**03.32**

Modified contact arrangements Han® EE

The connector series Han® EE equipped with all contacts may be used for voltages up to 500 V ~ pollution degree 3. A modified contact loading arrangement permits use up to 1000 V ~ pollution degree also in pollution degree 3. Fully equipped connectors may also be used up to 1000 V ~ but in a lower pollution degree. See chapter 00. According to IEC 61984 connectors should not be coupled or decoupled under electrical load.

690 V Pollution degree 3

Contact arrangement view from termination side

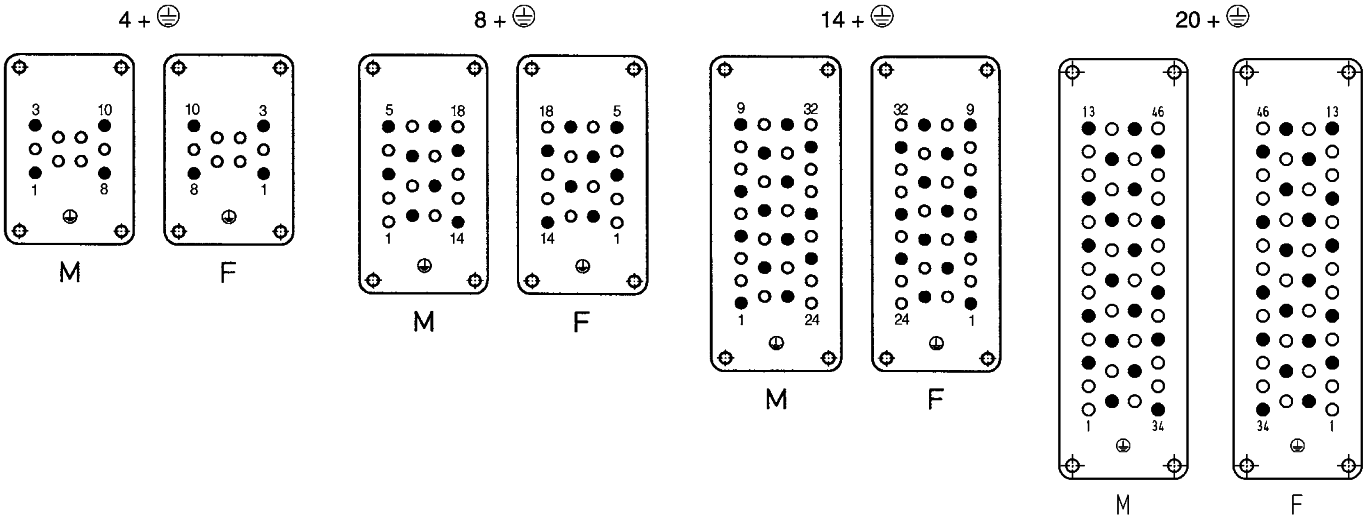

● Working contact ○ Without contact M - Male insert F - Female insert

1000 V Pollution degree 3

Contact arrangement view from termination side

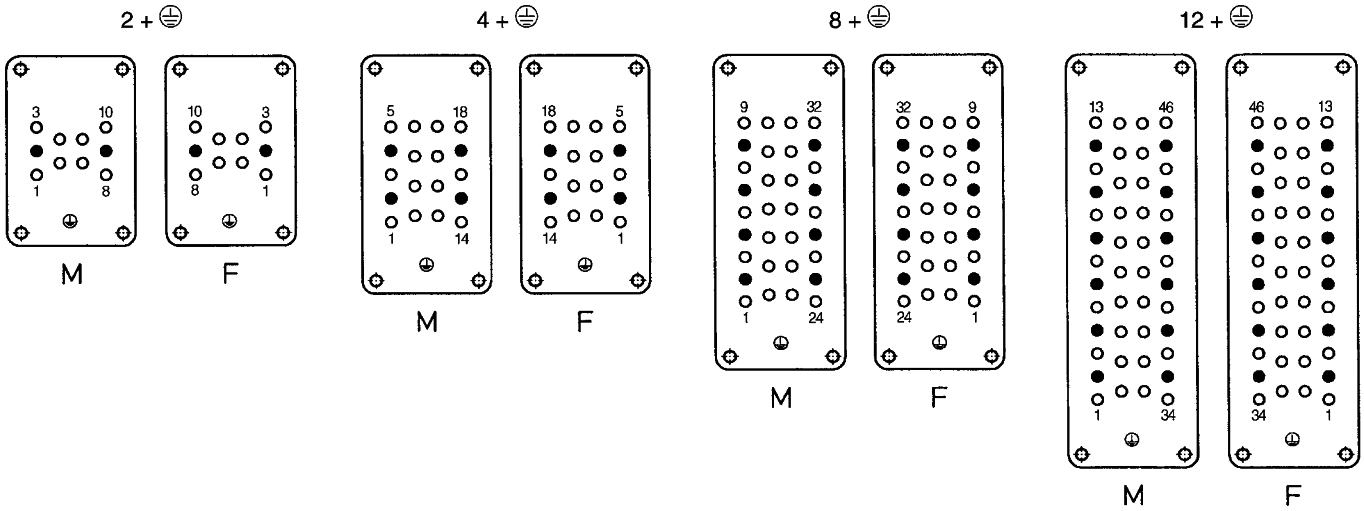

● Working contact ○ Without contact M - Male insert F - Female insert

Features

- Covers a wide range of cross core sections
- Screw termination with wire protection

Derating

Current carrying capacity

The current carrying capacity of the connectors is limited by the thermal load capability of the contact element material including the connections and the insulating parts. The derating curve is therefore valid for currents which flow constantly (non-intermittent) through each contact element of the connector evenly, without exceeding the allowed maximum temperature.

Measuring and testing techniques acc. to IEC 60512-5-2

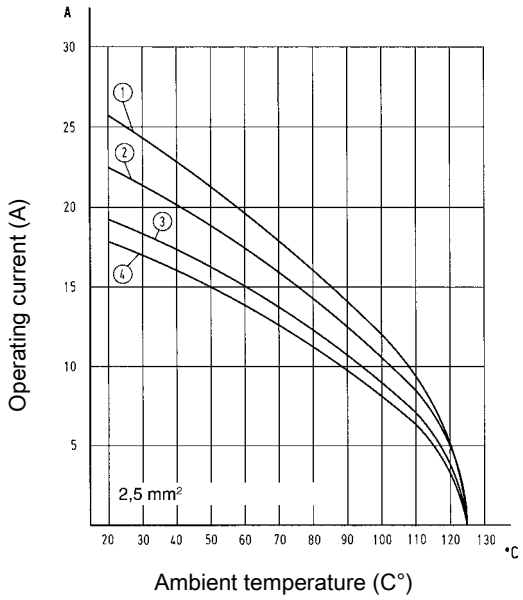

① Han® 6 E
② Han® 10 E
③ Han® 16 E Han® 32 E
④ Han® 24 E Han® 48 E

Derating

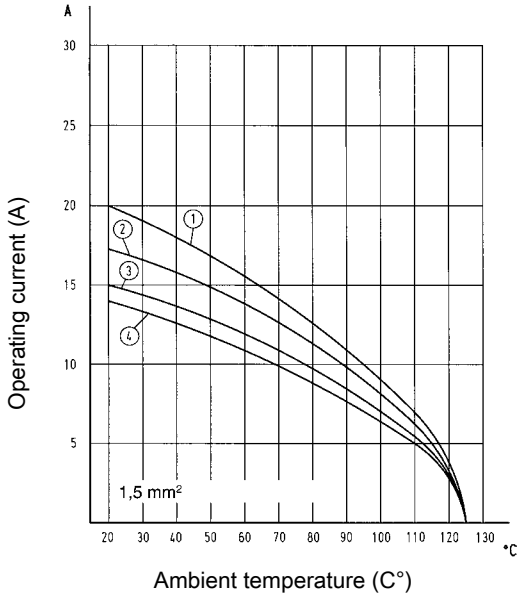

① Han® 6 E
② Han® 10 E
③ Han® 16 E Han® 32 E
④ Han® 24 E Han® 48 E

Technical characteristics

Contacts	6, 10, 16, 24, 32, 48
Electrical data acc. to IEC 61984	**16 A 500 V 6 kV 3**
Rated current	16 A
Rated voltage	500 V
Rated impulse voltage	6 kV
Pollution degree	3
Rated voltage acc. to UL	600 V
Rated voltage acc. to CSA	600 V
Insulation resistance	≥10^{10} Ohm
Limiting temperatures	-40 °C ... 125 °C
Flammability (insert) acc. to UL 94	V 0
Mating cycles	≥500
Tightening torque	0.5 Nm
Material (insert)	polycarbonate
Colour (insert)	RAL 7032 (light grey)

Specifications and approvals

IEC 60664-1
IEC 61984

Details

Internal use in the switch cabinet in conjunction with Han-Snap® (see chapter 11)

Suitable for hoods/housings of series Han® B, Han® M, Han® EMV, Han® HPR, Han® Easy Hood (see chapter 31)

Number of contacts

6+ ⏚

500 V
16 A

Identification	Wire cross section (mm²)	Part number male	Part number female	Drawing Dimensions in mm
Han E®, Crimp terminal 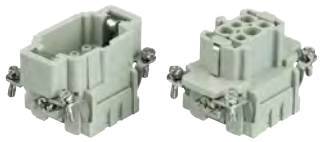 Please order crimp contacts separately.		09 33 006 2602	09 33 006 2702	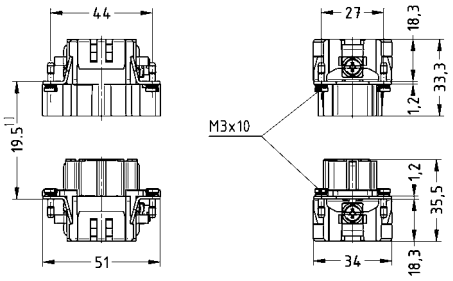 1) Distance for contact max. 21 mm
Han E®, Screw terminal, with wire protection, contact resistance ≤1 mOhm 	0.75 – 2.5	09 33 006 2601	09 33 006 2701	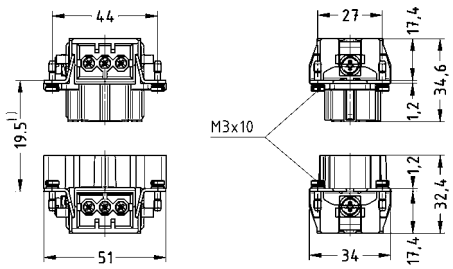 1) Distance for contact max. 21 mm 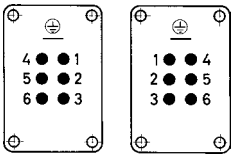 Contact arrangement (view from termination side) 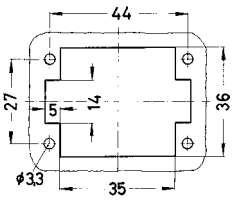 Panel cut out

Number of contacts

10+ ⏚

500 V
16 A

Identification	Wire cross section (mm²)	Part number male	Part number female	Drawing Dimensions in mm
Han E®, Crimp terminal 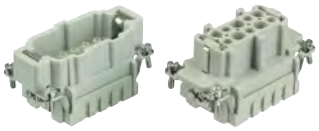 Please order crimp contacts separately.		09 33 010 2602	09 33 010 2702	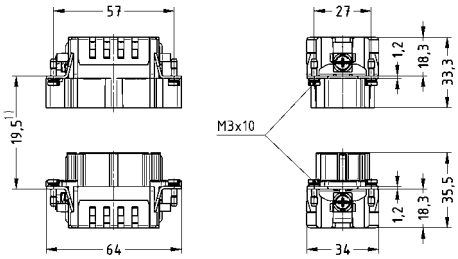 1) Distance for contact max. 21 mm
Han E®, Screw terminal, with wire protection, contact resistance ≤1 mOhm 	0.75 – 2.5	09 33 010 2601	09 33 010 2701	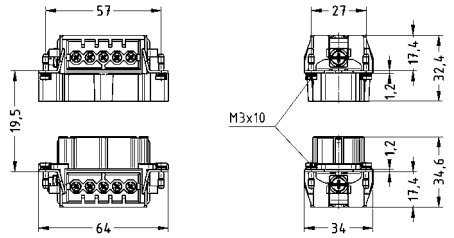 1) Distance for contact max. 21 mm 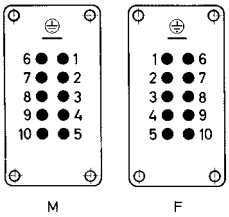 Contact arrangement (view from termination side) 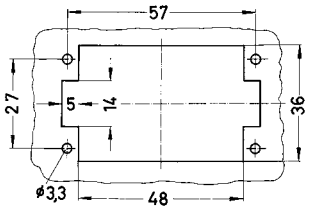 Panel cut out

Number of contacts

16+ ⏚

500 V
16 A

Identification	Wire cross section (mm²)	Part number male	Part number female	Drawing Dimensions in mm
Han E®, Crimp terminal Please order crimp contacts separately.		09 33 016 2602	09 33 016 2702	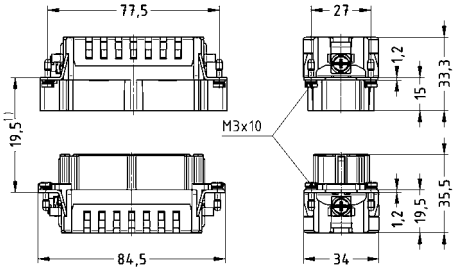 1) Distance for contact max. 21 mm
Han E®, Screw terminal, with wire protection, contact resistance ≤1 mOhm 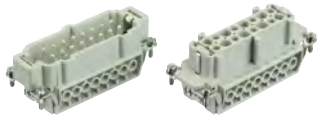	0.75 – 2.5	09 33 016 2601	09 33 016 2701	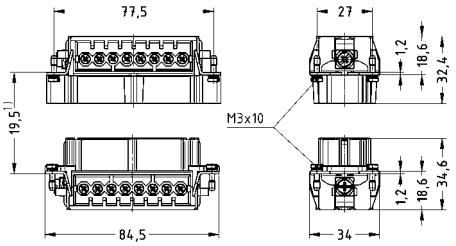 1) Distance for contact max. 21 mm 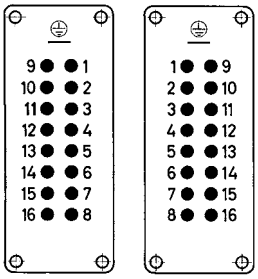 Contact arrangement (view from termination side) 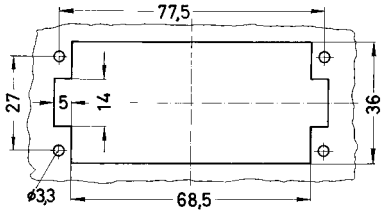 Panel cut out

Number of contacts

24+ ⏚

500 V
16 A

Identification	Wire cross section (mm²)	Part number male	Part number female	Drawing Dimensions in mm
Han E®, Crimp terminal 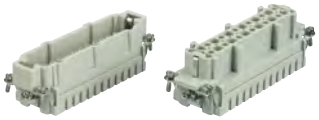 Please order crimp contacts separately.		09 33 024 2602	09 33 024 2702	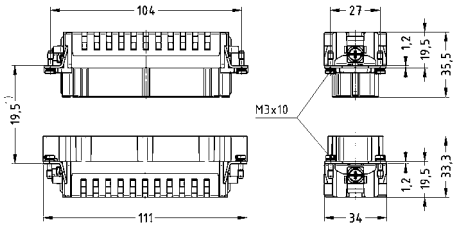 1) Distance for contact max. 21 mm
Han E®, Screw terminal, with wire protection, contact resistance ≤1 mOhm 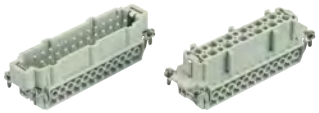	0.75 – 2.5	09 33 024 2601	09 33 024 2701	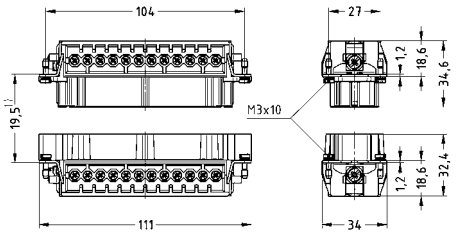 1) Distance for contact max. 21 mm 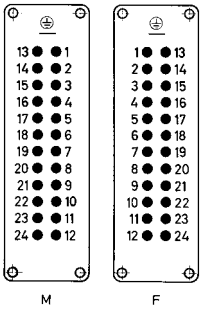 Contact arrangement (view from termination side) 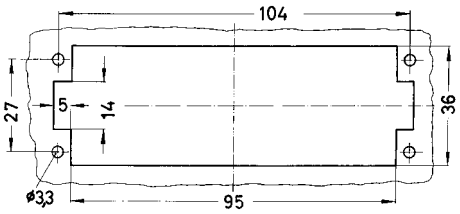 Panel cut out

Number of contacts

32+ ⏚

500 V
16 A

Identification	Wire cross section (mm²)	Part number male	Part number female	Drawing Dimensions in mm
Han E®, Crimp terminal, 1 - 16 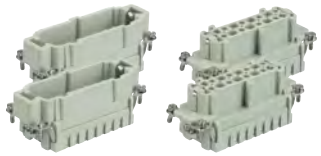 Please order crimp contacts separately. Please order two inserts for a complete assembly!		09 33 016 2602	09 33 016 2702	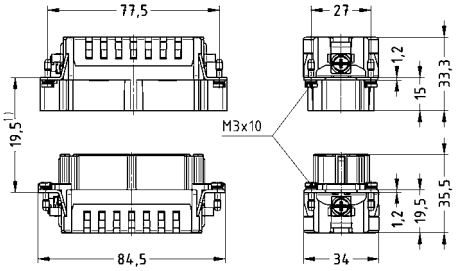 1) Distance for contact max. 21 mm
Han E®, Crimp terminal, 17 - 32 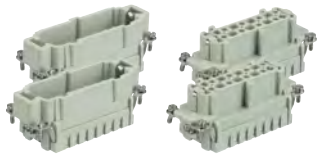 Please order crimp contacts separately. Please order two inserts for a complete assembly!		09 33 016 2612	09 33 016 2712	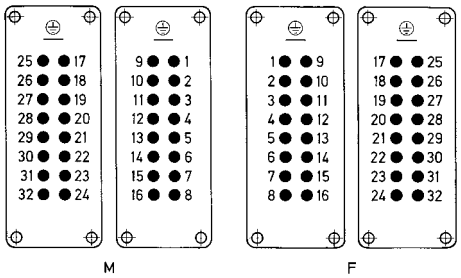 Contact arrangement (view from termination side) 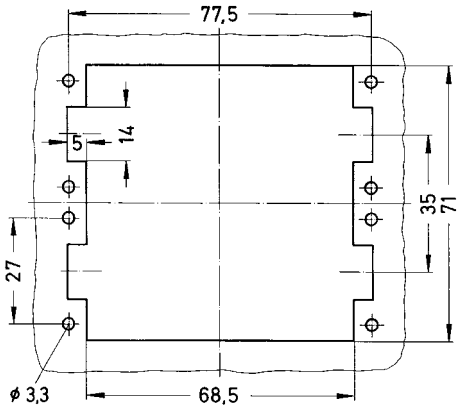 Panel cut out

Identification	Wire cross section (mm²)	Part number male	Part number female	Drawing Dimensions in mm
Han E®, Screw terminal, 1 - 16, with wire protection, contact resistance ≤1 mOhm 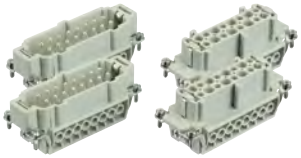 Please order two inserts for a complete assembly!	0.75 – 2.5	09 33 016 2601	09 33 016 2701	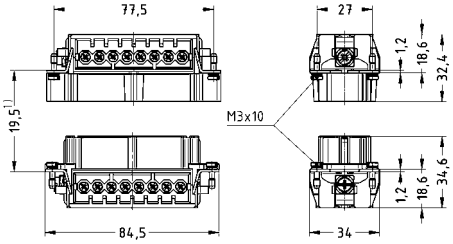 1) Distance for contact max. 21 mm
Han E®, Screw terminal, 17 - 32, with wire protection, contact resistance ≤1 mOhm 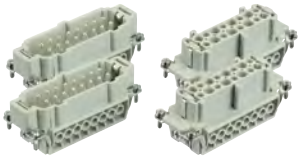 Please order two inserts for a complete assembly!	0.75 – 2.5	09 33 016 2611	09 33 016 2711	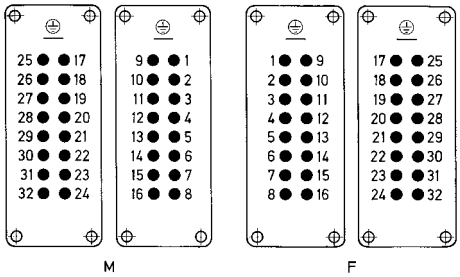 Contact arrangement (view from termination side) 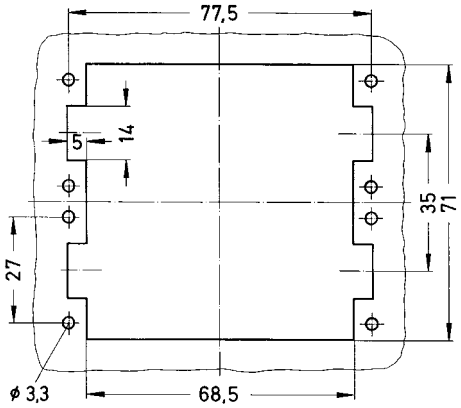 Panel cut out

Number of contacts

48+ ⏚

500 V
16 A

Identification	Wire cross section (mm²)	Part number male	Part number female	Drawing Dimensions in mm
Han E®, Crimp terminal, 1 - 24 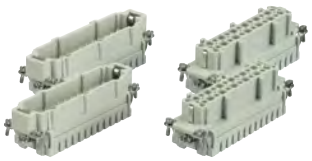 Please order crimp contacts separately. Please order two inserts for a complete assembly!		09 33 024 2602	09 33 024 2702	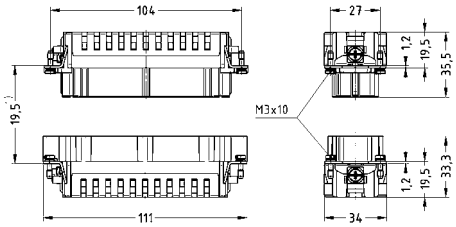 1) Distance for contact max. 21 mm
Han E®, Crimp terminal, 25 - 48 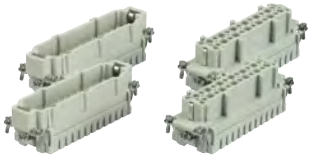 Please order crimp contacts separately. Please order two inserts for a complete assembly!		09 33 024 2612	09 33 024 2712	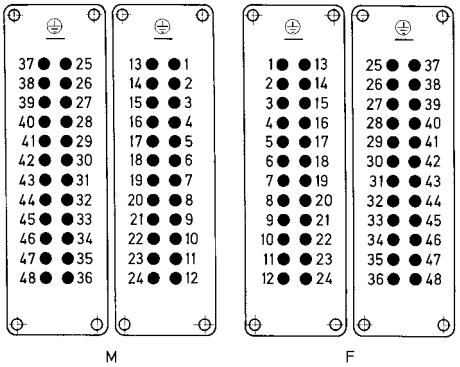 Contact arrangement (view from termination side) 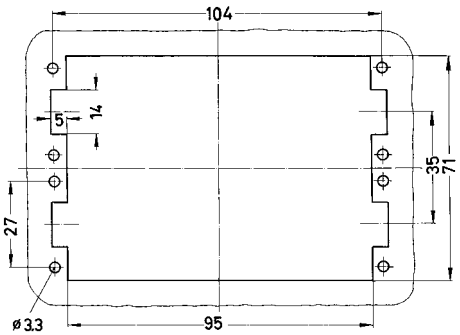 Panel cut out

Identification	Wire cross section (mm²)	Part number male	Part number female	Drawing Dimensions in mm
Han E®, Screw terminal, 1 - 24, with wire protection, contact resistance ≤1 mOhm 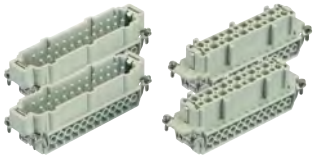 Please order two inserts for a complete assembly!	0.75 – 2.5	09 33 024 2601	09 33 024 2701	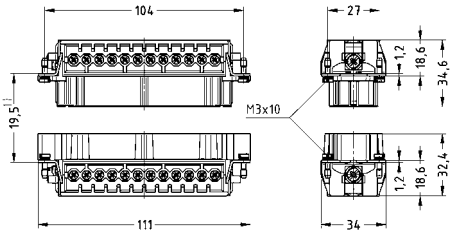 1) Distance for contact max. 21 mm
Han E®, Screw terminal, 25 - 48, with wire protection, contact resistance ≤1 mOhm 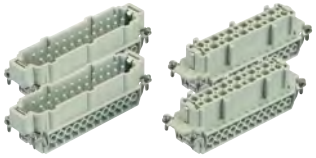 Please order two inserts for a complete assembly!	0.75 – 2.5	09 33 024 2611	09 33 024 2711	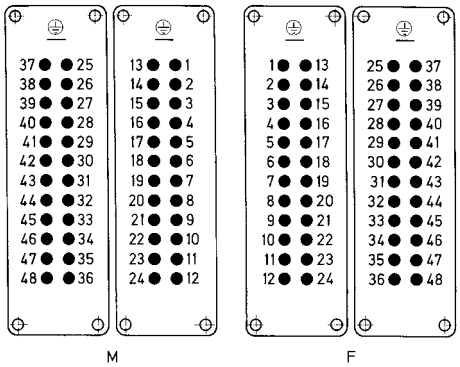 Contact arrangement (view from termination side) 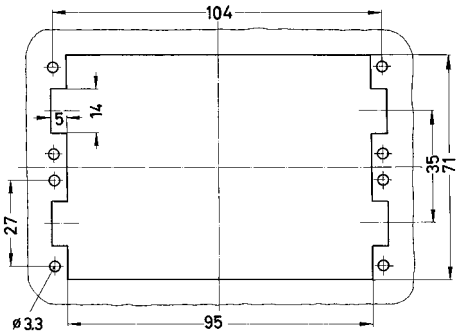 Panel cut out

Features

- Reliable cage clamp termination
- Han® ESS: two termination points per contact
- Vibration prooved
- No special tools required

Derating

Current carrying capacity

The current carrying capacity of the connectors is limited by the thermal load capability of the contact element material including the connections and the insulating parts. The derating curve is therefore valid for currents which flow constantly (non-intermittent) through each contact element of the connector evenly, without exceeding the allowed maximum temperature.

Measuring and testing techniques acc. to IEC 60512-5-2

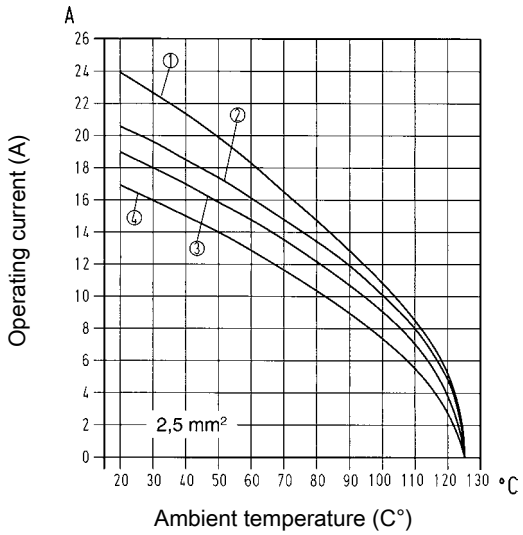

① Han® 6 ES
② Han® 10 ES
③ Han® 16 ES Han® 32 ES
④ Han® 24 ES Han® 48 ES

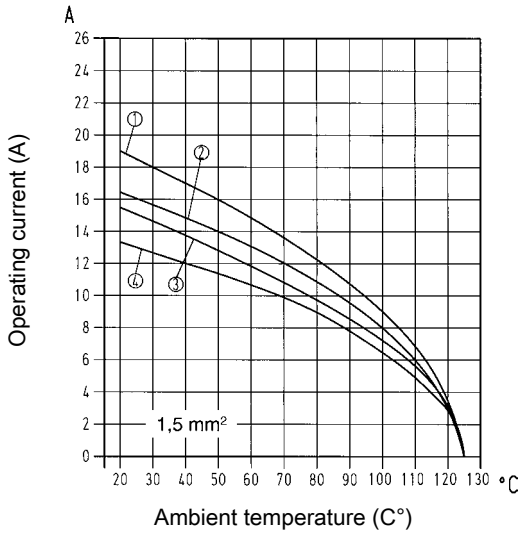

① Han® 6 ES
② Han® 10 ES
③ Han® 16 ES Han® 32 ES
④ Han® 24 ES Han® 48 ES

Derating

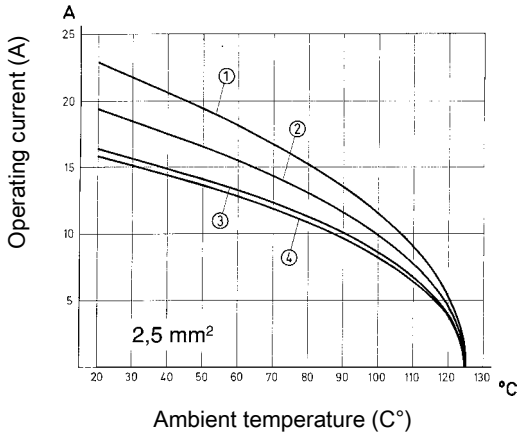

① Han® 6 ESS
② Han® 10 ESS
③ Han® 16 ESS Han® 32 ESS
④ Han® 24 ESS Han® 48 ESS

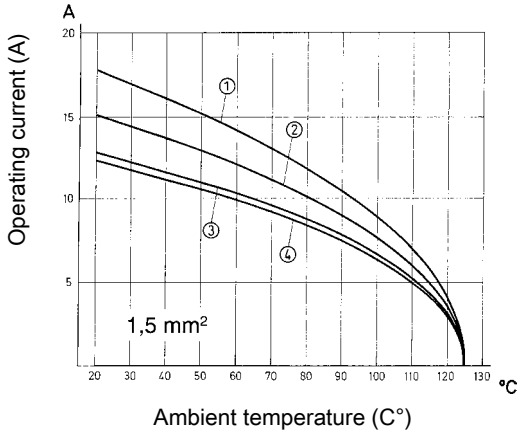

① Han® 6 ESS
② Han® 10 ESS
③ Han® 16 ESS Han® 32 ESS
④ Han® 24 ESS Han® 48 ESS

Technical characteristics

Contacts	6, 10, 16, 24, 32, 48
Electrical data acc. to IEC 61984	**16 A 500 V 6 kV 3**
Rated current	16 A
Rated voltage	500 V
Rated impulse voltage	6 kV
Pollution degree	3
Rated voltage acc. to UL	600 V
Rated voltage acc. to CSA	600 V
Insulation resistance	≥10^{10} Ohm
Limiting temperatures	-40 °C ... 125 °C
Flammability (insert) acc. to UL 94	V 0
Mating cycles	≥500
Material (insert)	polycarbonate
Colour (insert)	RAL 7032 (light grey)
Material (contact)	copper alloy

Specifications and approvals

IEC 60664-1
IEC 61984

Details

Internal use in the switch cabinet in conjunction with Han-Snap® (see chapter 11)

Suitable for hoods/housings of series Han® B, Han® M, Han® EMV, Han® HPR, Han® Easy Hood (see chapter 31)

Number of contacts

6+ ⏚

500 V
16 A

Identification	Wire cross section (mm²)	Part number male	Part number female	Drawing Dimensions in mm
Han® ES, Cage-clamp terminal, silver plated contacts, contact resistance ≤3 mOhm 	0.14 – 2.5	09 33 006 2616	09 33 006 2716	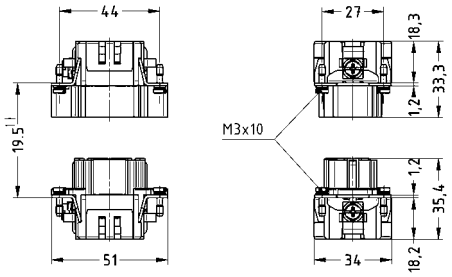 1) Distance for contact max. 21 mm
Han® ESS, Cage-clamp terminal, silver plated contacts, contact resistance ≤3 mOhm 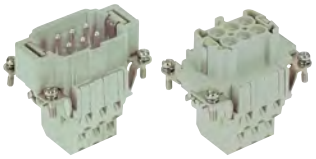 two terminals per contact	0.14 – 2.5	09 33 006 2672	09 33 006 2772	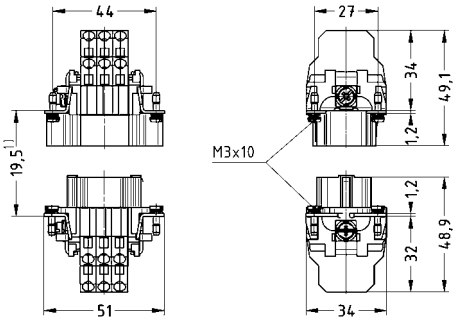 1) Distance for contact max. 21 mm 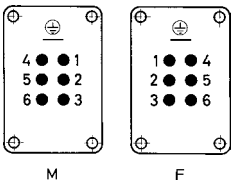 Contact arrangement (view from termination side) 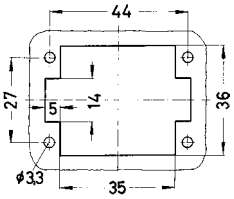 Panel cut out

Number of contacts

10+ ⏚

500 V
16 A

Identification	Wire cross section (mm²)	Part number male	Part number female	Drawing Dimensions in mm
Han® ES, Cage-clamp terminal, silver plated contacts, contact resistance ≤3 mOhm 	0.14 – 2.5	09 33 010 2616	09 33 010 2716	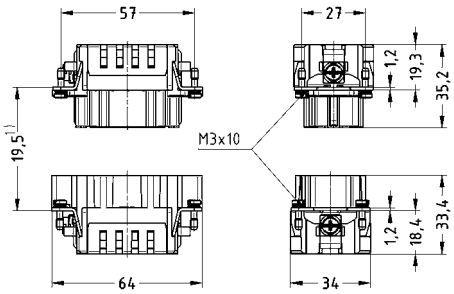 1) Distance for contact max. 21 mm
Han® ESS, Cage-clamp terminal, silver plated contacts, contact resistance ≤3 mOhm 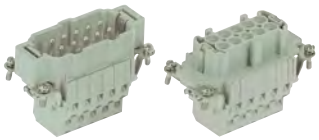 two terminals per contact	0.14 – 2.5	09 33 010 2672	09 33 010 2772	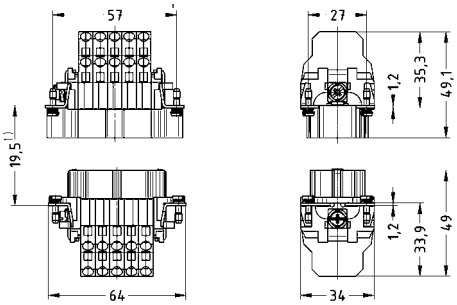 1) Distance for contact max. 21 mm 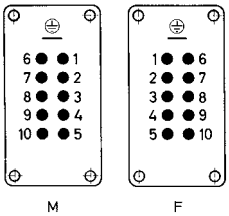 Contact arrangement (view from termination side) 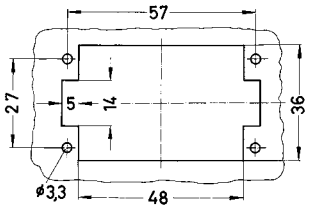 Panel cut out

Number of contacts

16+ ⏚

500 V
16 A

Identification	Wire cross section (mm²)	Part number male	Part number female	Drawing Dimensions in mm
Han® ES, Cage-clamp terminal, silver plated contacts, contact resistance ≤3 mOhm 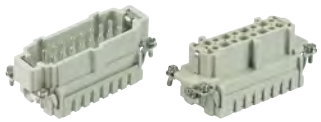	0.14 – 2.5	09 33 016 2616	09 33 016 2716	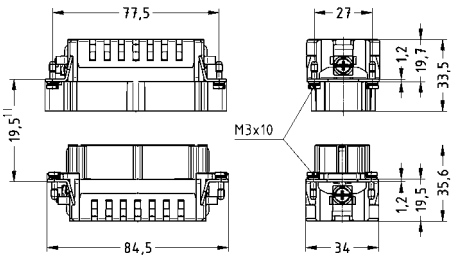 1) Distance for contact max. 21 mm
Han® ESS, Cage-clamp terminal, silver plated contacts, contact resistance ≤3 mOhm 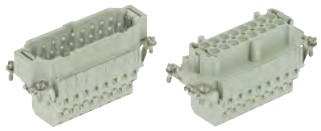 two terminals per contact	0.14 – 2.5	09 33 016 2672	09 33 016 2772	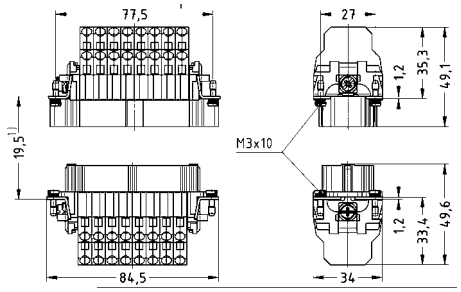 1) Distance for contact max. 21 mm 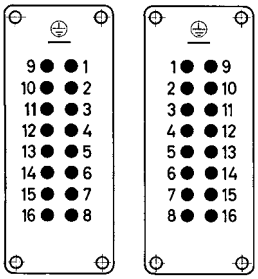 Contact arrangement (view from termination side) 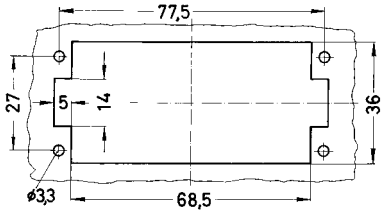 Panel cut out

Number of contacts

24+ ⏚

500 V
16 A

Identification	Wire cross section (mm²)	Part number male	Part number female	Drawing Dimensions in mm
Han® ES, Cage-clamp terminal, silver plated contacts, contact resistance ≤3 mOhm 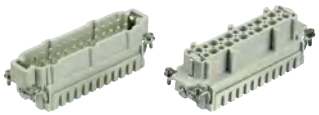	0.14 – 2.5	09 33 024 2616	09 33 024 2716	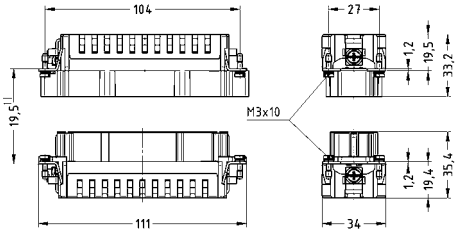 1) Distance for contact max. 21 mm
Han® ESS, Cage-clamp terminal, silver plated contacts, contact resistance ≤3 mOhm 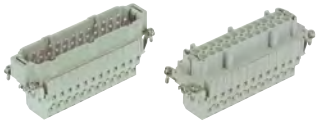 two terminals per contact	0.14 – 2.5	09 33 024 2672	09 33 024 2772	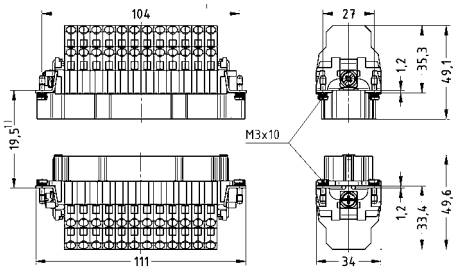 1) Distance for contact max. 21 mm 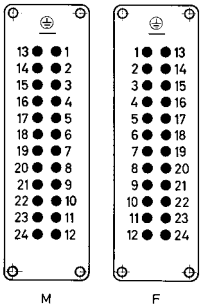 Contact arrangement (view from termination side) 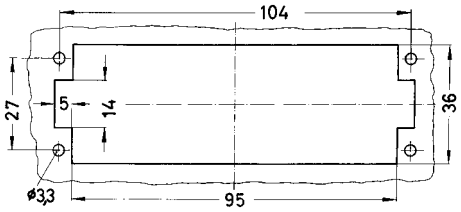 Panel cut out

Number of contacts

32+ ⏚

500 V
16 A

Identification	Wire cross section (mm²)	Part number male	Part number female	Drawing Dimensions in mm
Han® ES, Cage-clamp terminal, 1 - 16, silver plated contacts, contact resistance ≤3 mOhm 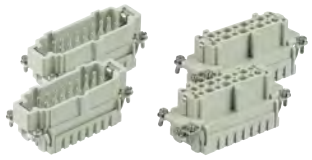 Please order two inserts for a complete assembly!	0.14 – 2.5	09 33 016 2616	09 33 016 2716	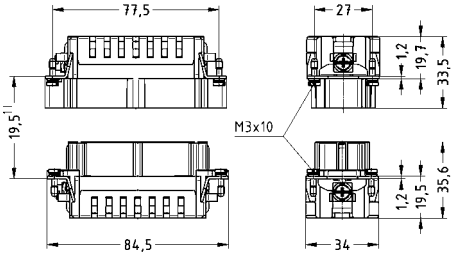 1) Distance for contact max. 21 mm
Han® ES, Cage-clamp terminal, 17 - 32, silver plated contacts, contact resistance ≤3 mOhm 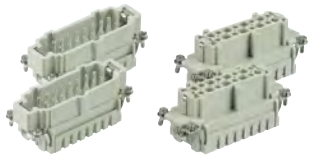 Please order two inserts for a complete assembly!	0.14 – 2.5	09 33 016 2626	09 33 016 2726	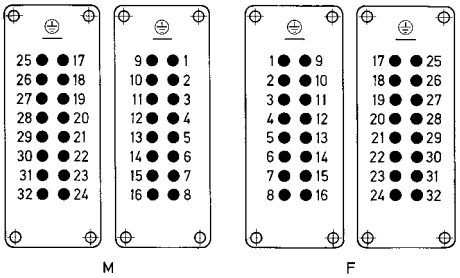 Contact arrangement (view from termination side) 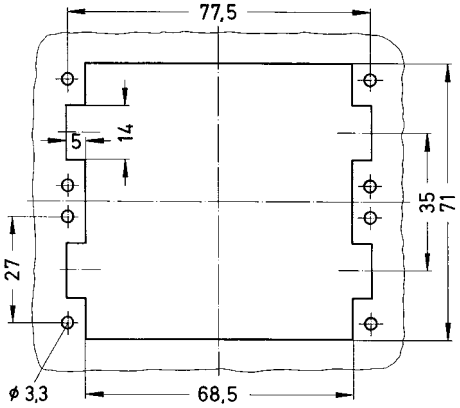 Panel cut out

Identification	Wire cross section (mm²)	Part number male	Part number female	Drawing Dimensions in mm
Han® ESS, Cage-clamp terminal, silver plated contacts, contact resistance ≤3 mOhm Please order two inserts for a complete assembly!	0.14 – 2.5	09 33 016 2672	09 33 016 2772	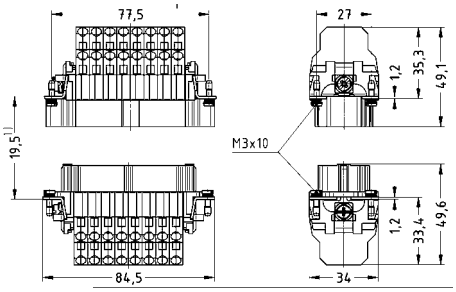 1) Distance for contact max. 21 mm 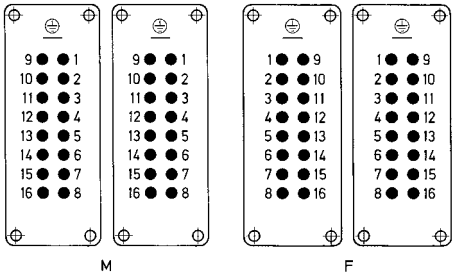 Contact arrangement (view from termination side) 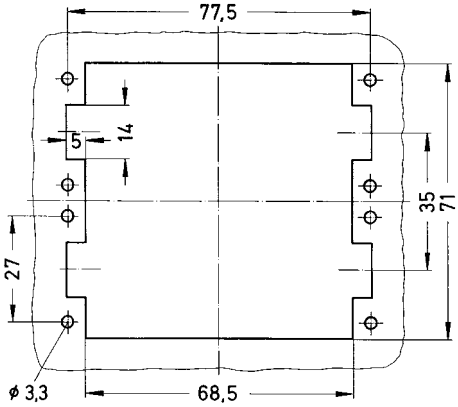 Panel cut out

Han E/EE

Number of contacts

48+ ⏚

500 V
16 A

Identification	Wire cross section (mm²)	Part number male	Part number female	Drawing Dimensions in mm
Han® ES, Cage-clamp terminal, 1 - 24, silver plated contacts, contact resistance ≤3 mOhm 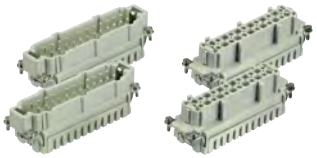 Please order two inserts for a complete assembly!	0.14 – 2.5	09 33 024 2616	09 33 024 2716	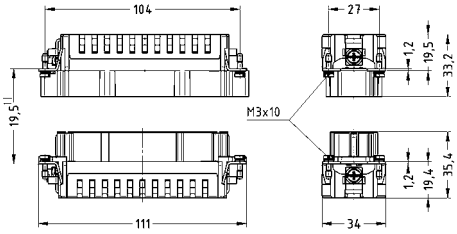 1) Distance for contact max. 21 mm
Han® ES, Cage-clamp terminal, 25 - 48, silver plated contacts, contact resistance ≤3 mOhm 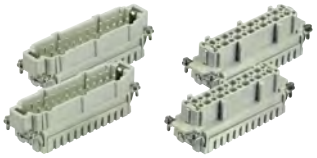 Please order two inserts for a complete assembly!	0.14 – 2.5	09 33 024 2626	09 33 024 2726	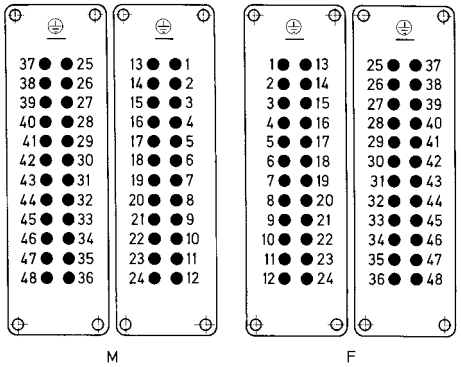 M F Contact arrangement (view from termination side) 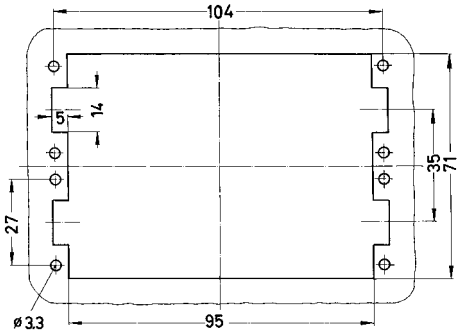 Panel cut out

Identification	Wire cross section (mm²)	Part number male	Part number female	Drawing Dimensions in mm
Han® ESS, Cage-clamp terminal, silver plated contacts, contact resistance ≤3 mOhm 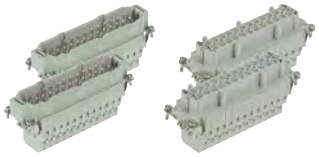 Please order two inserts for a complete assembly!	0.14 – 2.5	09 33 024 2672	09 33 024 2772	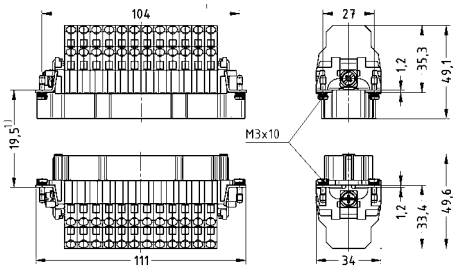 1) Distance for contact max. 21 mm 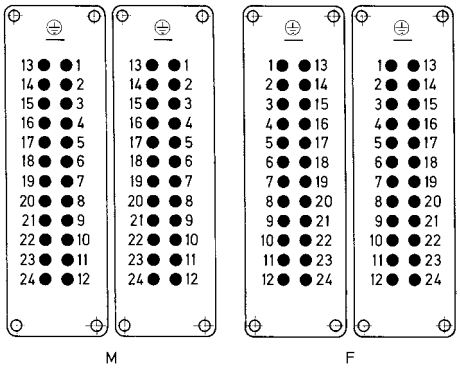 Contact arrangement (view from termination side) 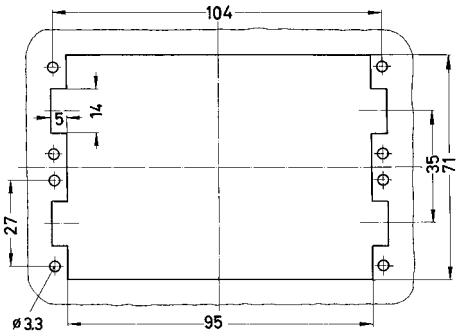 Panel cut out

Features

- Higher density of crimping contacts
- Coded insert
- Gold and silver contacts available

Derating

Current carrying capacity

The current carrying capacity of the connectors is limited by the thermal load capability of the contact element material including the connections and the insulating parts. The derating curve is therefore valid for currents which flow constantly (non-intermittent) through each contact element of the connector evenly, without exceeding the allowed maximum temperature.

Measuring and testing techniques acc. to IEC 60512-5-2

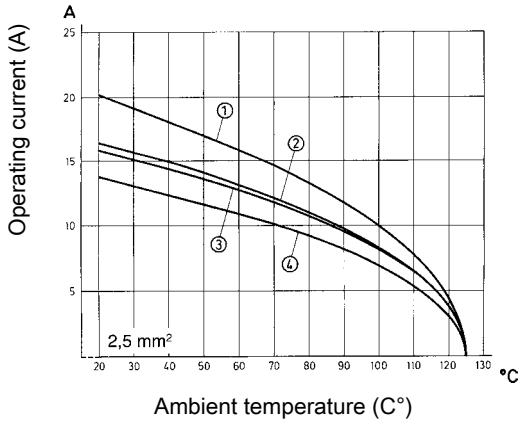

① Han® 10 EE
② Han® 18 EE
③ Han® 32 EE Han® 64 EE
④ Han® 46 EE Han® 92 EE

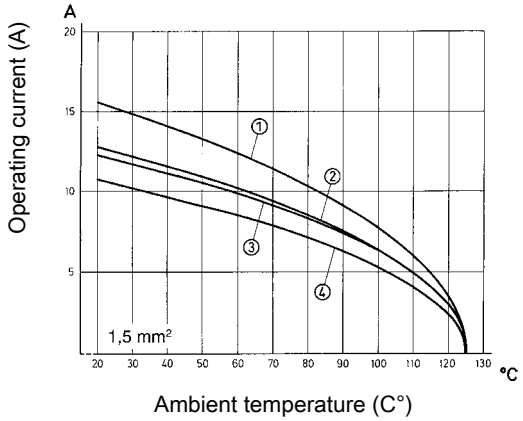

① Han® 10 EE
② Han® 18 EE
③ Han® 32 EE Han® 64 EE
④ Han® 46 EE Han® 92 EE

Technical characteristics

Contacts	10, 18, 32, 46, 64, 92
Electrical data acc. to IEC 61984	**16 A 500 V 6 kV 3**
Rated current	16 A
Rated voltage	500 V
Rated impulse voltage	6 kV
Pollution degree	3
Rated voltage acc. to UL	600 V
Rated voltage acc. to CSA	600 V
Insulation resistance	≥10^{10} Ohm
Limiting temperatures	-40 °C ... 125 °C
Flammability (insert) acc. to UL 94	V 0
Mating cycles	≥500
Material (insert)	polycarbonate
Colour (insert)	RAL 7032 (light grey)

Specifications and approvals

IEC 60664-1
IEC 61984

Details

Internal use in the switch cabinet in conjunction with Han-Snap® (see chapter 11)

Suitable for hoods/housings of series Han® B, Han® M, Han® EMV, Han® HPR, Han® Easy Hood (see chapter 31)

Number of contacts

10+ ⏚

500 V
16 A

Identification	Part number male	Part number female	Drawing Dimensions in mm
Han® EE, Crimp terminal 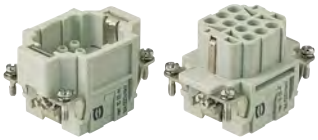 Please order crimp contacts separately.	09 32 010 3001	09 32 010 3101	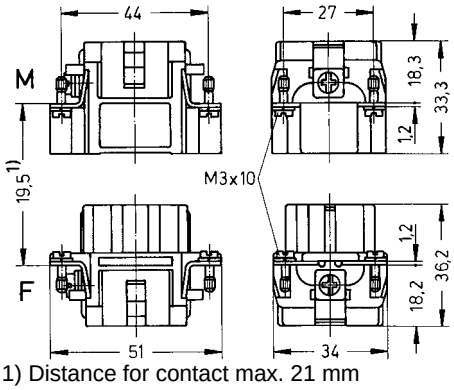 1) Distance for contact max. 21 mm 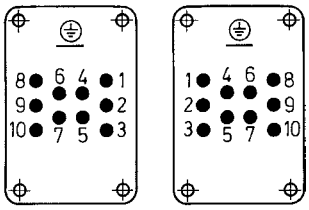 M F Contact arrangement (view from termination side) 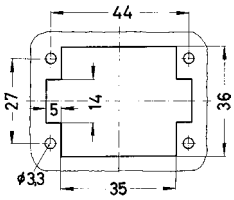 Panel cut out

Number of contacts

18+ ⏚

500 V
16 A

Identification	Part number male	Part number female	Drawing Dimensions in mm
Han® EE, Crimp terminal Please order crimp contacts separately.	09 32 018 3001	09 32 018 3101	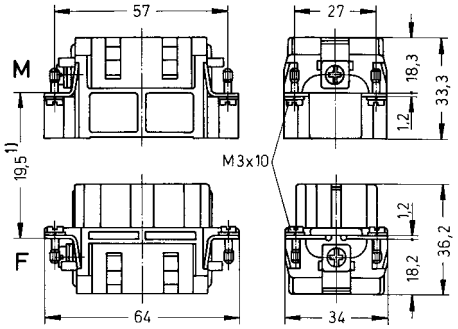 1) Distance for contact max. 21 mm 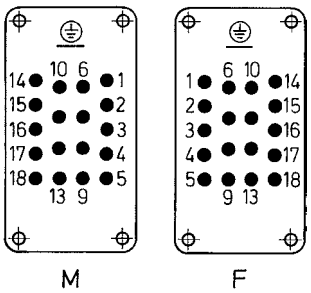 Contact arrangement (view from termination side) 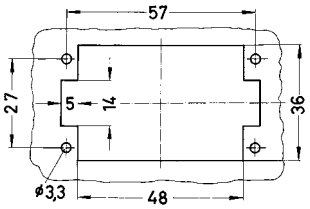 Panel cut out

Number of contacts

32+ ⏚

500 V
16 A

Identification	Part number male	Part number female	Drawing Dimensions in mm
Han® EE, Crimp terminal Please order crimp contacts separately.	09 32 032 3001	09 32 032 3101	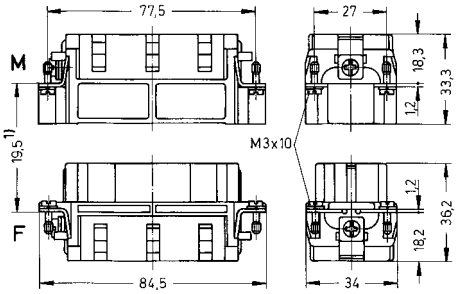 1) Distance for contact max. 21 mm 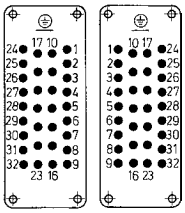 Contact arrangement (view from termination side) 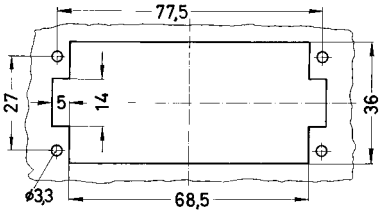 Panel cut out

Number of contacts

46+ ⏚

500 V
16 A

Identification	Part number male	Part number female	Drawing Dimensions in mm
Han® EE, Crimp terminal 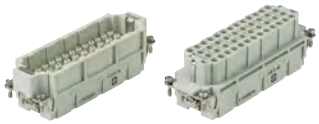 Please order crimp contacts separately.	09 32 046 3001	09 32 046 3101	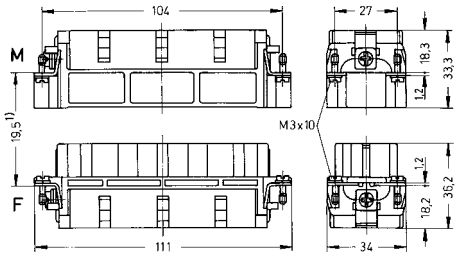 1) Distance for contact max. 21 mm 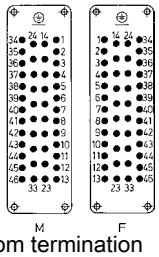 Contact arrangement (view from termination side) 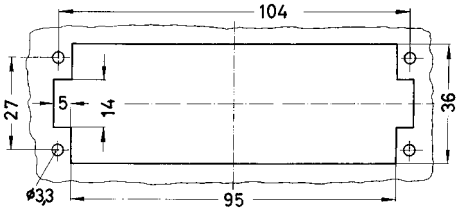 Panel cut out

Number of contacts

64+ ⏚

500 V
16 A

Identification	Part number male	Part number female	Drawing Dimensions in mm
Han® EE, Crimp terminal, 1 - 32 Please order crimp contacts separately. Please order two inserts for a complete assembly!	09 32 032 3001	09 32 032 3101	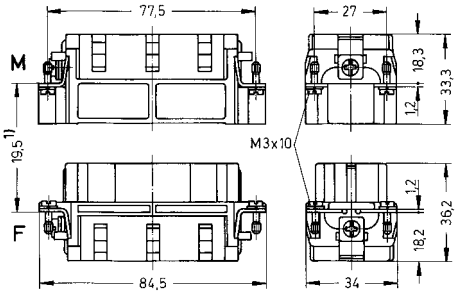 1) Distance for contact max. 21 mm
Han® EE, Crimp terminal, 33 - 64 Please order crimp contacts separately. Please order two inserts for a complete assembly!	09 32 032 3011	09 32 032 3111	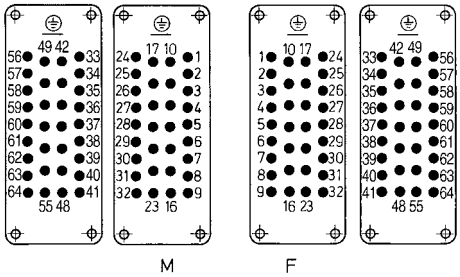 Contact arrangement (view from termination side) 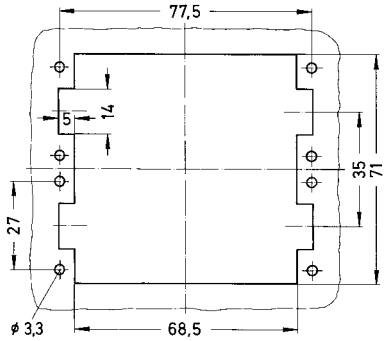 Panel cut out

Number of contacts

92+ ⏚

500 V
16 A

Identification	Part number male	Part number female	Drawing Dimensions in mm
Han® EE, Crimp terminal, 1 - 46 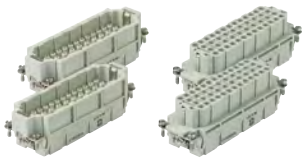 Please order crimp contacts separately. Please order two inserts for a complete assembly!	09 32 046 3001	09 32 046 3101	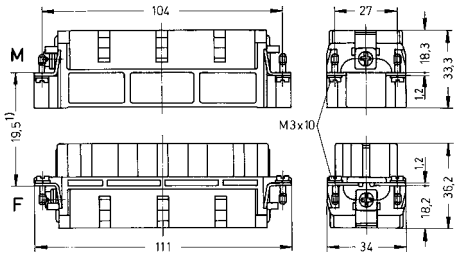 1) Distance for contact max. 21 mm
Han® EE, Crimp terminal, 47 - 92 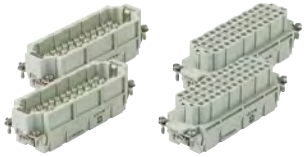 Please order crimp contacts separately. Please order two inserts for a complete assembly!	09 32 046 3011	09 32 046 3111	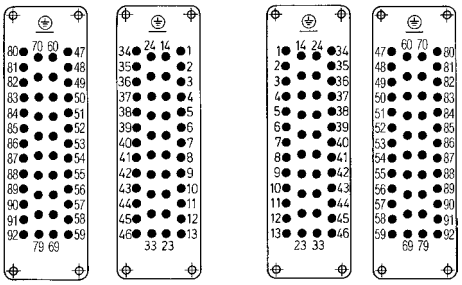 M F Contact arrangement (view from termination side) 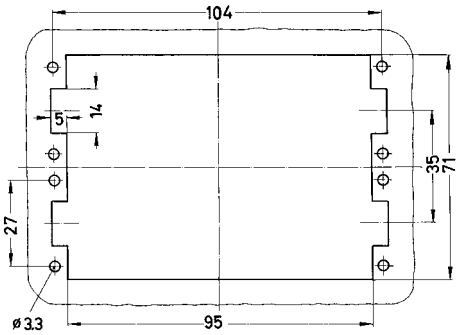 Panel cut out

Features

- Highest density of crimping contacts
- Coded insert
- Gold and silver contacts available

Derating

Current carrying capacity

The current carrying capacity of the connectors is limited by the thermal load capability of the contact element material including the connections and the insulating parts. The derating curve is therefore valid for currents which flow constantly (non-intermittent) through each contact element of the connector evenly, without exceeding the allowed maximum temperature.

Measuring and testing techniques acc. to IEC 60512-5-2

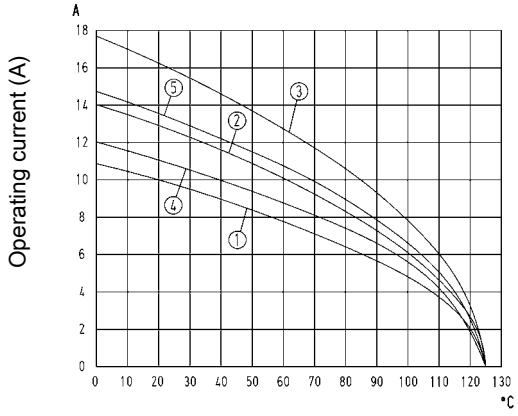

① Han® 64 EEE / 1.5 mm²
② Han® 64 EEE / 2.5 mm²
③ Han® 64 EEE / 4 mm²
④ Han® 40 EEE / 1.5 mm²
⑤ Han® 40 EEE / 2.5 mm²

Technical characteristics

Contacts	40, 64
Electrical data acc. to IEC 61984	**16 A 500 V 6 kV 3**
Rated current	16 A
Rated voltage	500 V
Rated impulse voltage	6 kV
Pollution degree	3
Insulation resistance	≥10^{10} Ohm
Limiting temperatures	-40 °C ... 125 °C
Flammability (insert) acc. to UL 94	V 0
Mating cycles	≥500
Material (insert)	polycarbonate
Colour (insert)	RAL 7032 (light grey)

Specifications and approvals

IEC 60664-1
IEC 61984

Details

Internal use in the switch cabinet in conjunction with Han-Snap® (see chapter 11)

Suitable for hoods/housings of series Han® B, Han® M, Han® EMV, Han® HPR, Han® Easy Hood (see chapter 31)

Number of contacts

40+ ⏚

500 V
16 A

Identification	Part number male	Part number female	Drawing Dimensions in mm
Han® EEE, Crimp terminal Please order crimp contacts separately.	09 32 040 3001	09 32 040 3101	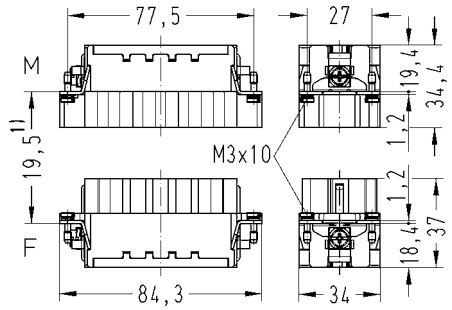 1) Distance for contact max. 21 mm 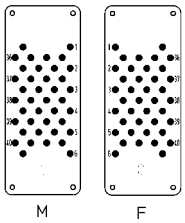 Contact arrangement (view from termination side) 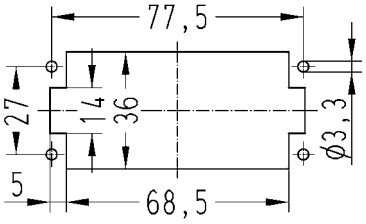 Panel cut out

Number of contacts

64+ ⏚

500 V
16 A

Identification	Part number male	Part number female	Drawing Dimensions in mm
Han® EEE, Crimp terminal Please order crimp contacts separately.	09 32 064 3001	09 32 064 3101	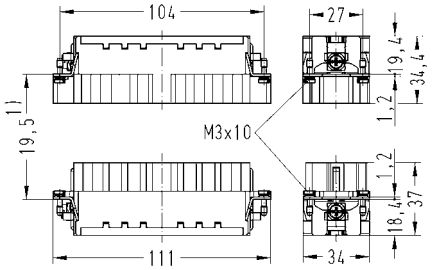 1) Distance for contact max. 21 mm 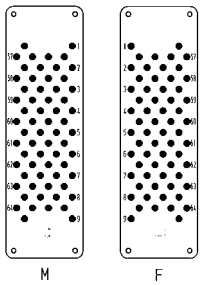 Contact arrangement (view from termination side) 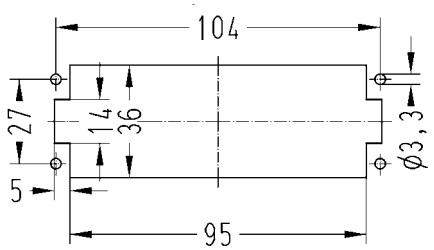 Panel cut out

Technical characteristics

Material (contact)	copper alloy

Specifications and approvals

IEC 60664-1
IEC 61984

Details

Crimping tools see chapter 90

Remarks on the crimp technique

The wire gauges mentioned in the catalogue refer to geometric wire gauges of cables.

Coding pin

Use of the coding pin prevents incorrect mating to other connectors of the same type. The male pin should be omitted from the opposing cavity in the male insert.

Identification	Wire cross section (mm²)	Part number male	Part number female	Drawing Dimensions in mm
Han E®, Crimp contact, gold plated contacts, contact resistance ≤1 mOhm	0.14 – 0.37	09 33 000 6117	09 33 000 6217	
	0.5	09 33 000 6122	09 33 000 6222	
	0.75	09 33 000 6115	09 33 000 6215	
	1	09 33 000 6118	09 33 000 6218	
	1.5	09 33 000 6116	09 33 000 6216	
	2.5	09 33 000 6123	09 33 000 6223	
	4	09 33 000 6119	09 33 000 6221	
Han E®, Crimp contact, silver plated contacts, contact resistance ≤1 mOhm	0.14 – 0.37	09 33 000 6127	09 33 000 6227	
	0.5	09 33 000 6121	09 33 000 6220	
	0.75	09 33 000 6114	09 33 000 6214	
	1	09 33 000 6105	09 33 000 6205	
	1.5	09 33 000 6104	09 33 000 6204	
	2.5	09 33 000 6102	09 33 000 6202	
	3	09 33 000 6106	09 33 000 6206	
	4	09 33 000 6107	09 33 000 6207	

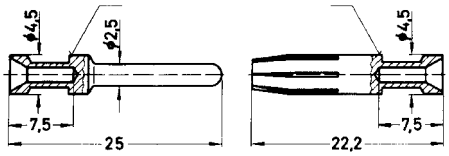

Identification	Wire gauge		Stripping length
no groove	0.14-0.37 mm²	AWG 26-22	7.5 mm
no groove	0.5 mm²	AWG 20	7.5 mm
1 groove*	0.75 mm²	AWG 18	7.5 mm
1 groove	1 mm²	AWG 18	7.5 mm
2 grooves	1.5 mm²	AWG 16	7.5 mm
3 grooves	2.5 mm²	AWG 14	7.5 mm
wide groove	3 mm²	AWG 12	7.5 mm
no groove	4 mm²	AWG 12	7.5 mm

* on the back crimp collar

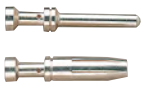

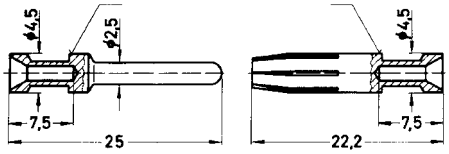

Identification	Wire gauge		Stripping length
no groove	0.14-0.37 mm²	AWG 26-22	7.5 mm
no groove	0.5 mm²	AWG 20	7.5 mm
1 groove*	0.75 mm²	AWG 18	7.5 mm
1 groove	1 mm²	AWG 18	7.5 mm
2 grooves	1.5 mm²	AWG 16	7.5 mm
3 grooves	2.5 mm²	AWG 14	7.5 mm
wide groove	3 mm²	AWG 12	7.5 mm
no groove	4 mm²	AWG 12	7.5 mm

* on the back crimp collar

Identification	Wire cross section (mm²)	Part number male	Part number female	Drawing Dimensions in mm
Han E®, Relay contact, silver plated contacts, contact resistance ≤1 mOhm 	0.75 – 1 1.5 2.5	09 33 000 6109 09 33 000 6110 09 33 000 6111		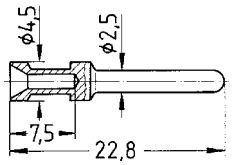 Stripping length 7.5 mm
Han E®, F.O. contact for 1 mm plastic fibre		20 10 001 3311	20 10 001 3321	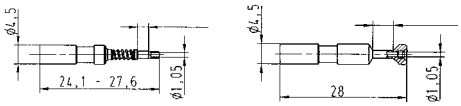 Crimp zone
Han E®, Han® EE, Han® EEE, Coding pin, plastic for crimp inserts only			09 33 000 9954	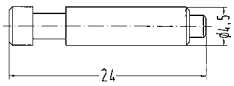

Contents | Page

Han Hv E®	**04.3**
Han® 16 / 32 Hv E	**04.9**
Han® Hv ES	**04.12**
Contacts	**04.18**
Hoods/Housings	**04.19**

Difference: Han Hv E® to standard hoods/housings

Standard Hoods/Housings Han® B

Suitable for
Han® Hv ES cage-clamp terminal
and Han Hv E® crimp terminal

Special hood/housing Han Hv E®

Suitable for
Han Hv E® screw terminal

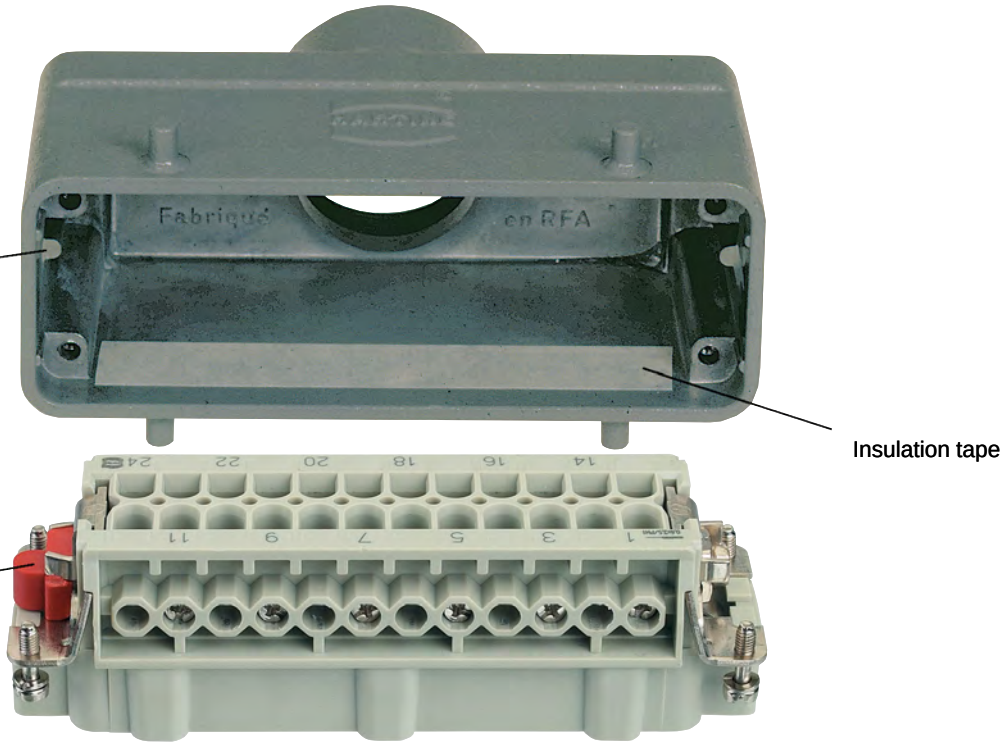

Features

- Designed for application up to 830 V
- Available in several termination techniques

Derating

Current carrying capacity

The current carrying capacity of the connectors is limited by the thermal load capability of the contact element material including the connections and the insulating parts. The derating curve is therefore valid for currents which flow constantly (non-intermittent) through each contact element of the connector evenly, without exceeding the allowed maximum temperature.

Measuring and testing techniques acc. to IEC 60512-5-2

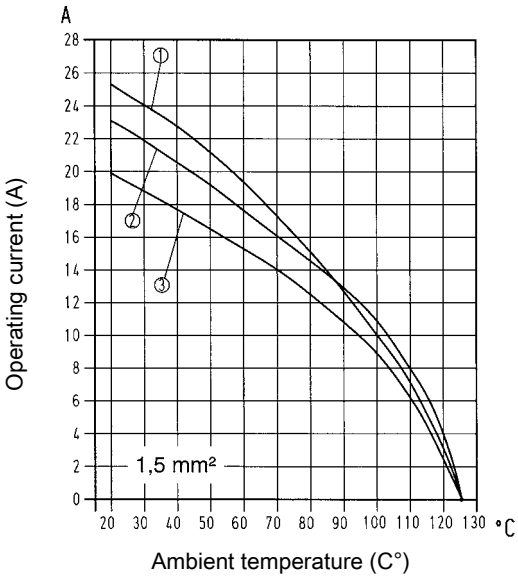

① Han® 3 Hv E
② Han® 6 / 12 Hv E
③ Han® 10 / 16 / 20 / 32 Hv E

Derating

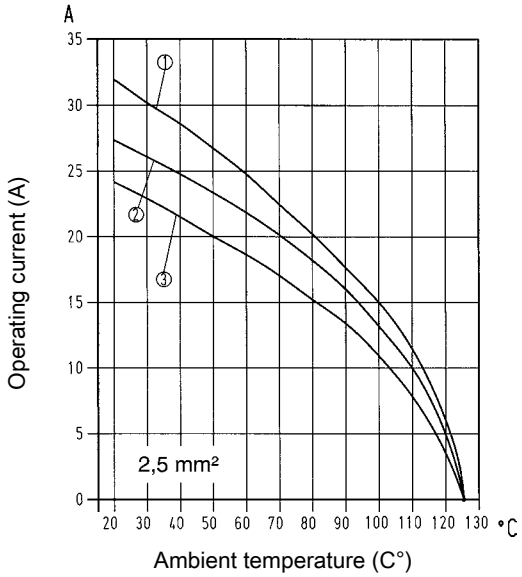

① Han® 3 Hv E
② Han® 6 / 12 Hv E
③ Han® 10 / 16 / 20 / 32 Hv E

Technical characteristics

Contacts	3, 6, 10, 12, 20
Electrical data acc. to IEC 61984	**16 A 830 V 8 kV 3**
Rated current	16 A
Rated voltage	830 V
Rated impulse voltage	8 kV
Pollution degree	3
Rated voltage acc. to UL	600 V
Rated voltage acc. to CSA	600 V
Insulation resistance	≥10^{10} Ohm
Limiting temperatures	-40 °C ... 125 °C
Flammability (insert) acc. to UL 94	V 0
Mating cycles	≥500
Tightening torque	0.5 Nm
Material (insert)	polycarbonate
Colour (insert)	RAL 7032 (light grey)
Material (contact)	copper alloy

Specifications and approvals

IEC 61984
IEC 60664-1

Details

Han Hv E® srew requires special Han Hv E® housings

Number of contacts

3+ ⏚

830 V
16 A
+ 2 additional contacts for safe high voltage connections

Identification	Wire cross section (mm²)	Part number male	Part number female	Drawing Dimensions in mm
Han Hv E®, Crimp terminal Please order crimp contacts separately.		09 34 003 2602	09 34 003 2702	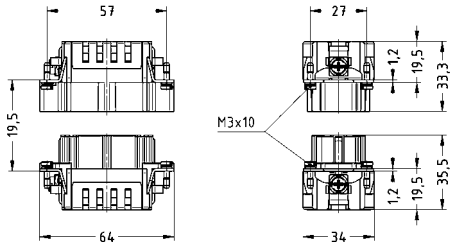
Han Hv E®, Screw terminal, silver plated contacts, contact resistance ≤1 mOhm 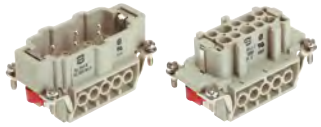	0.75 – 2.5	09 34 003 2601	09 34 003 2701	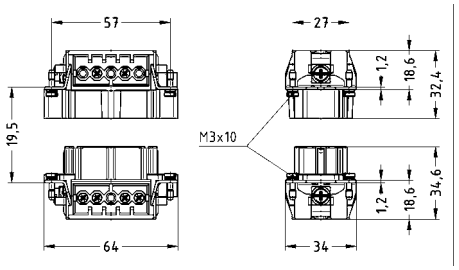 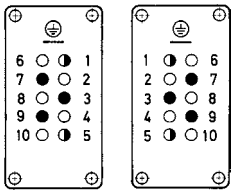 M F Contact arrangement (view from termination side) Han® 3 Hv E ◆ Working contact ◐ Relay contact ○ Without contact 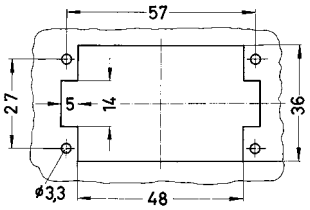 Panel cut out for inserts for use without hoods/housings

Number of contacts

6+ ⏚

830 V
16 A
+ 2 additional contacts for safe high voltage connections

Identification	Wire cross section (mm²)	Part number male	Part number female	Drawing Dimensions in mm
Han Hv E®, Crimp terminal 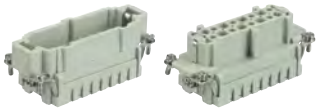 Please order crimp contacts separately.		09 34 006 2602	09 34 006 2702	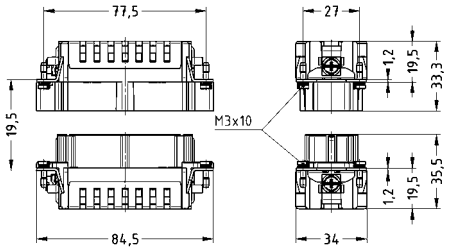
Han Hv E®, Screw terminal, silver plated contacts, contact resistance ≤1 mOhm 	0.75 – 2.5	09 34 006 2601	09 34 006 2701	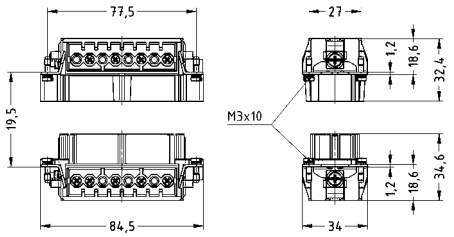 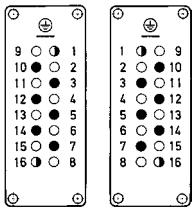 Contact arrangement (view from termination side) Han® 6 Hv E ◆ Working contact ◐ Relay contact ○ Without contact 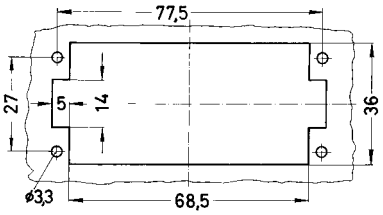 Panel cut out for inserts for use without hoods/housings

Number of contacts

10+ ⏚

830 V
16 A
+ 2 additional contacts for safe high voltage connections

Identification	Wire cross section (mm²)	Part number male	Part number female	Drawing Dimensions in mm
Han Hv E®, Crimp terminal 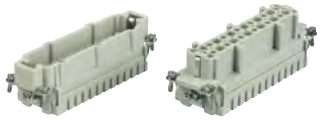 Please order crimp contacts separately.		09 34 010 2602	09 34 010 2702	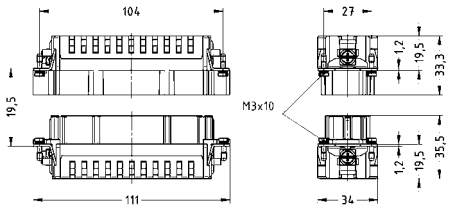
Han Hv E®, Screw terminal, silver plated contacts, contact resistance ≤1 mOhm	0.75 – 2.5	09 34 010 2601	09 34 010 2701	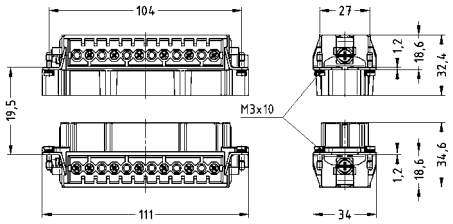 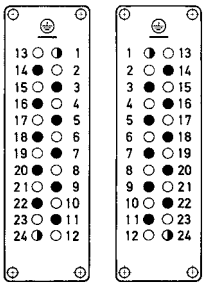 Contact arrangement (view from termination side) Han® 10 Hv E ◆ Working contact ◐ Relay contact ○ Without contact 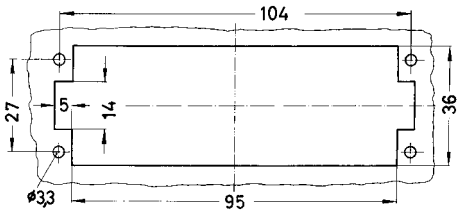 Panel cut out for inserts for use without hoods/housings

Number of contacts

12+ ⏚

830 V
16 A
+ 4 additional contacts for safe high voltage connections

Identification	Wire cross section (mm²)	Part number male	Part number female	Drawing Dimensions in mm
Han Hv E®, Crimp terminal 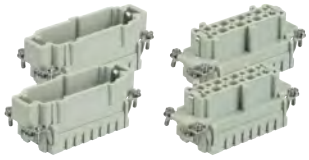 Please order crimp contacts separately. Please order two inserts for a complete assembly!		09 34 006 2602	09 34 006 2702	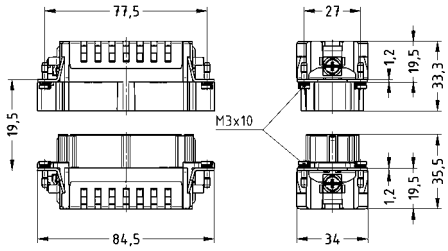
Han Hv E®, Screw terminal, silver plated contacts, contact resistance ≤1 mOhm Please order two inserts for a complete assembly!	0.75 – 2.5	09 34 006 2601	09 34 006 2701	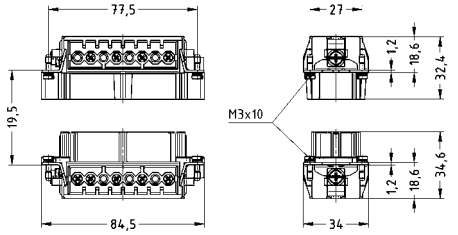 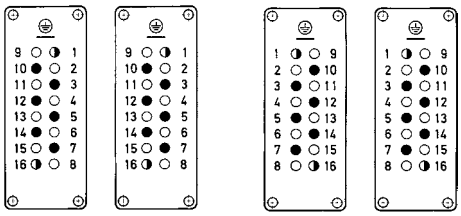 M F Contact arrangement (view from termination side) Han® 12 Hv E ◆ Working contact ◐ Relay contact ○ Without contact 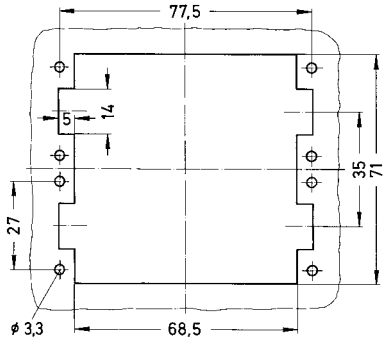 Panel cut out for inserts for use without hoods/housings

Number of contacts

20+ ⏚

830 V
16 A
+ 4 additional contacts for safe high voltage connections

Identification	Wire cross section (mm²)	Part number male	Part number female	Drawing Dimensions in mm
Han Hv E®, Crimp terminal 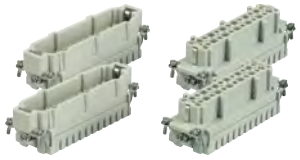 Please order crimp contacts separately. Please order two inserts for a complete assembly!		09 34 010 2602	09 34 010 2702	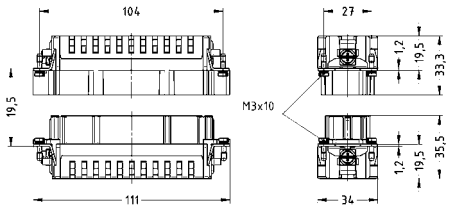
Han Hv E®, Screw terminal, silver plated contacts, contact resistance ≤1 mOhm Please order two inserts for a complete assembly!	0.75 – 2.5	09 34 010 2601	09 34 010 2701	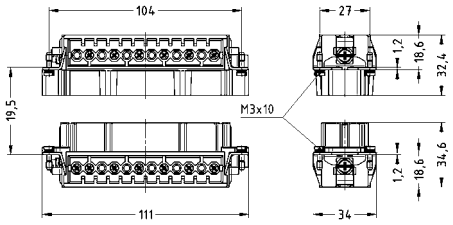 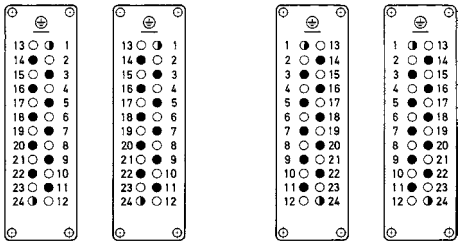 M F Contact arrangement (view from termination side) Han® 20 Hv E ◆ Working contact ◐ Relay contact ○ Without contact 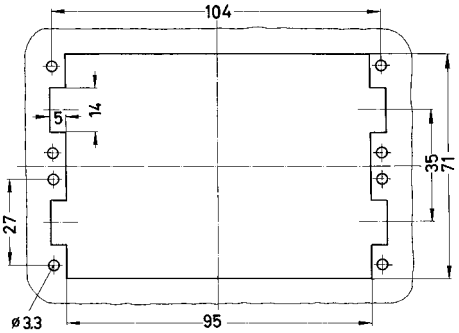 Panel cut out for inserts for use without hoods/housings

Features

- Designed for application up to 690 V
- No special tools required

Derating

Current carrying capacity

The current carrying capacity of the connectors is limited by the thermal load capability of the contact element material including the connections and the insulating parts. The derating curve is therefore valid for currents which flow constantly (non-intermittent) through each contact element of the connector evenly, without exceeding the allowed maximum temperature.

Measuring and testing techniques acc. to IEC 60512-5-2

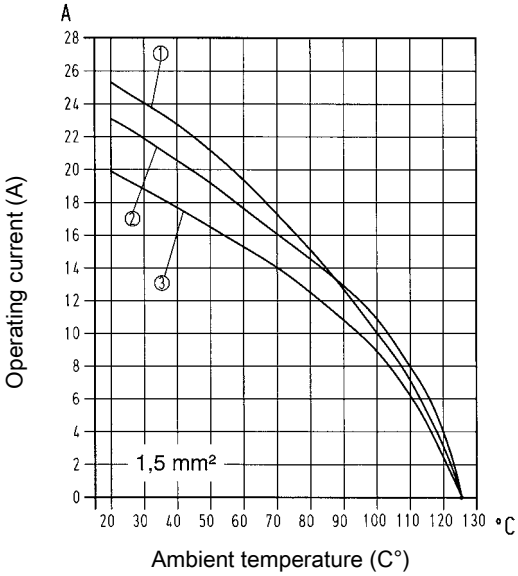

① Han® 3 Hv E
② Han® 6 / 12 Hv E
③ Han® 10 / 16 / 20 / 32 Hv E

Derating

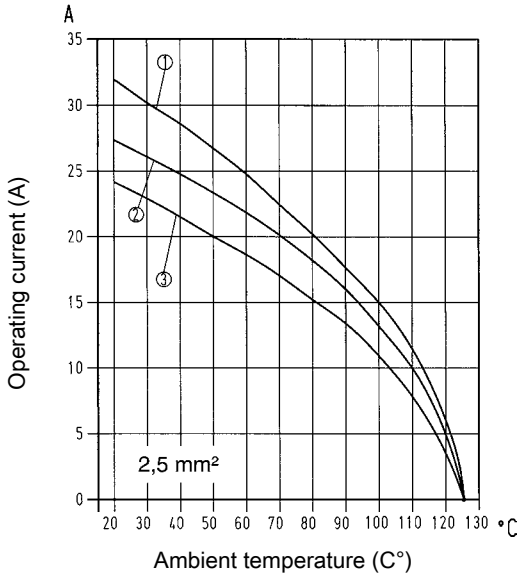

① Han® 3 Hv E
② Han® 6 / 12 Hv E
③ Han® 10 / 16 / 20 / 32 Hv E

Technical characteristics

Contacts	16, 32
Electrical data acc. to IEC 61984	**16 A 400/690 V 6 kV 3**
Rated current	16 A
Rated voltage conductor - ground	400 V
Rated voltage conductor - conductor	690 V
Rated impulse voltage	6 kV
Pollution degree	3
Rated voltage acc. to UL	600 V
Rated voltage acc. to CSA	600 V
Insulation resistance	≥10^{10} Ohm
Limiting temperatures	-40 °C ... 125 °C
Flammability (insert) acc. to UL 94	V 0
Mating cycles	≥500
Tightening torque	0.5 Nm
Material (insert)	polycarbonate
Colour (insert)	RAL 7032 (light grey)
Material (contact)	copper alloy

Specifications and approvals

IEC 60664-1
IEC 61984

Details

Han Hv E® srew requires special Han Hv E® housings

Number of contacts

16+ ⏚

400/690 V
16 A
+ 2 additional contacts for safe high voltage connections

Identification	Wire cross section (mm²)	Part number male	Part number female	Drawing Dimensions in mm
Han Hv E®, Screw terminal, silver plated contacts, contact resistance ≤1 mOhm 	0.75 – 2.5	09 34 016 2601	09 34 016 2701	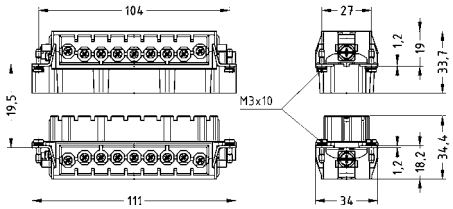 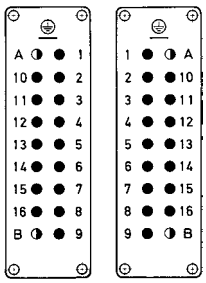 M F Contact arrangement (view from termination side) Han® 16 Hv E ◆ Working contact ◐ Relay contact ○ Without contact 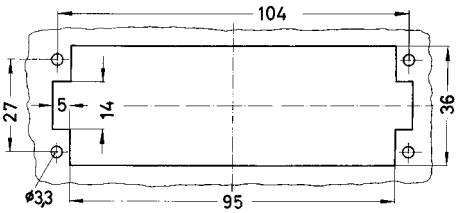 Panel cut out for inserts for use without hoods/housings

Number of contacts

32+ ⏚

400/690 V
16 A
+ 4 additional contacts for safe high voltage connections

Identification	Wire cross section (mm²)	Part number male	Part number female	Drawing Dimensions in mm
Han Hv E®, Screw terminal, silver plated contacts, contact resistance ≤1 mOhm Please order two inserts for a complete assembly!	0.75 – 2.5	09 34 016 2601	09 34 016 2701	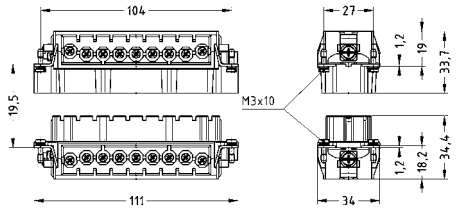 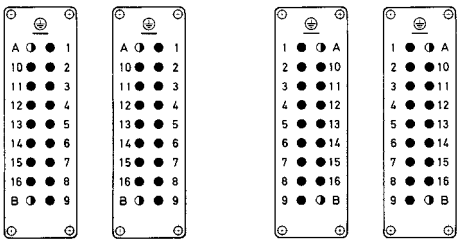 M F Contact arrangement (view from termination side) Han® 32 Hv E ◆ Working contact ◐ Relay contact ○ Without contact 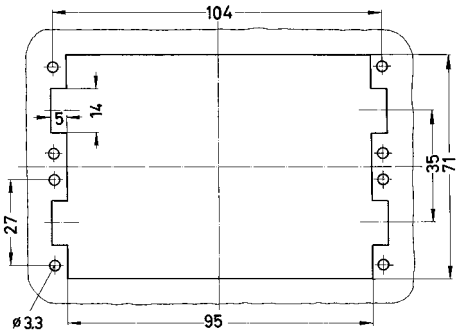 Panel cut out for inserts for use without hoods/housings

Features

- Designed for application up to 830 V
- Reliable cage clamp termination
- No special tools required
- Vibration prooved

Derating

Current carrying capacity

The current carrying capacity of the connectors is limited by the thermal load capability of the contact element material including the connections and the insulating parts. The derating curve is therefore valid for currents which flow constantly (non-intermittent) through each contact element of the connector evenly, without exceeding the allowed maximum temperature.

Measuring and testing techniques acc. to IEC 60512-5-2

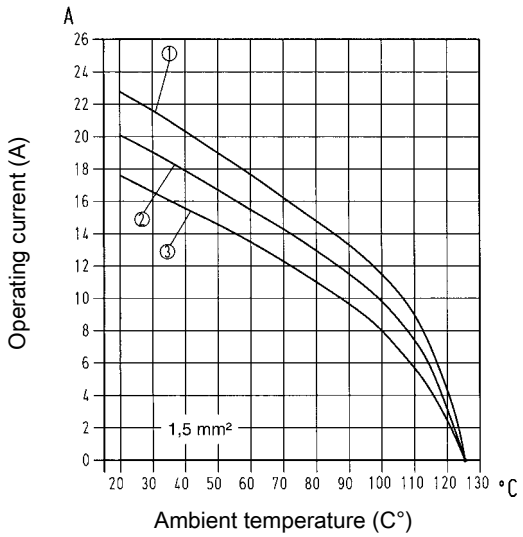

① Han® 3 Hv ES
② Han® 6 Hv ES / Han® 12 Hv ES
③ Han® 10 Hv ES / Han® 20 Hv ES

Derating

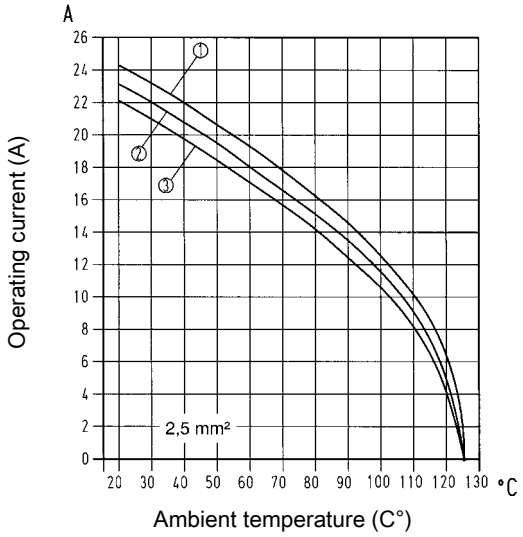

① Han® 3 Hv ES
② Han® 6 Hv ES / Han® 12 Hv ES
③ Han® 10 Hv ES / Han® 20 Hv ES

Technical characteristics

Contacts	3, 6, 10, 12, 20
Electrical data acc. to IEC 61984	**16 A 830 V 8 kV 3**
Rated current	16 A
Rated voltage	830 V
Rated impulse voltage	8 kV
Pollution degree	3
Rated voltage acc. to UL	600 V
Rated voltage acc. to CSA	600 V
Insulation resistance	≥10^{10} Ohm
Limiting temperatures	-40 °C ... 125 °C
Flammability (insert) acc. to UL 94	V 0
Mating cycles	≥500
Tightening torque	0.5 Nm
Material (insert)	polycarbonate
Colour (insert)	RAL 7032 (light grey)
Material (contact)	copper alloy

Specifications and approvals

IEC 61984
IEC 60664-1

Details

Not plug compatible to Han Hv E® screw/crimp terminal

Number of contacts

3+ ⏚

830 V
16 A
+ 2 additional contacts for safe high voltage connections

Identification	Wire cross section (mm²)	Part number male	Part number female	Drawing Dimensions in mm
Han® Hv ES, Cage-clamp terminal, silver plated contacts, contact resistance ≤3 mOhm not plug compatible to Han Hv E® screw/crimp terminal	0.14 – 2.5	09 34 003 2616	09 34 003 2716	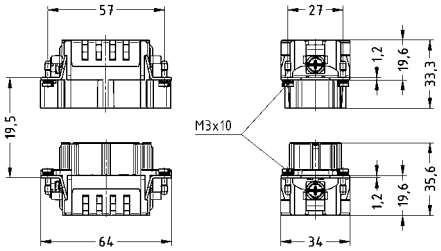 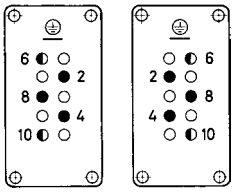 Contact arrangement (view from termination side) Han® 3 Hv ES ◆ Working contact ◐ Relay contact ○ Without contact 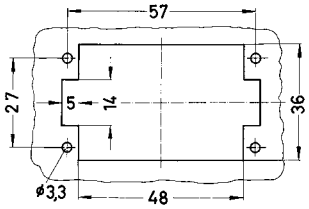 Panel cut out for inserts for use without hoods/housings

Number of contacts

6+ ⏚

830 V
16 A
+ 2 additional contacts for safe high voltage connections

Identification	Wire cross section (mm²)	Part number male	Part number female	Drawing Dimensions in mm
Han® Hv ES, Cage-clamp terminal, silver plated contacts, contact resistance ≤3 mOhm 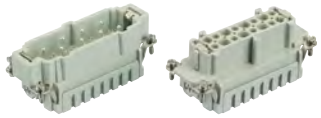 not plug compatible to Han Hv E® screw/crimp terminal	0.14 – 2.5	09 34 006 2616	09 34 006 2716	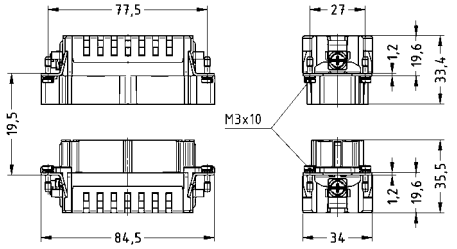 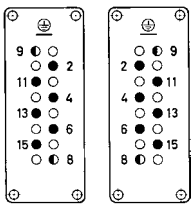 M F Contact arrangement (view from termination side) Han® 6 Hv ES ◆ Working contact ◐ Relay contact ○ Without contact 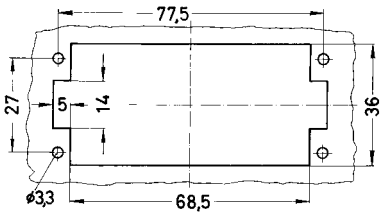 Panel cut out for inserts for use without hoods/housings

Number of contacts

10+ ⏚

830 V
16 A
+ 2 additional contacts for safe high voltage connections

Identification	Wire cross section (mm²)	Part number male	Part number female	Drawing Dimensions in mm
Han® Hv ES, Cage-clamp terminal, silver plated contacts, contact resistance ≤3 mOhm 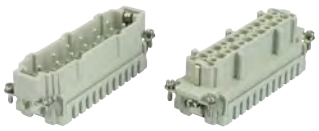 not plug compatible to Han Hv E® screw/crimp terminal	0.14 – 2.5	09 34 010 2616	09 34 010 2716	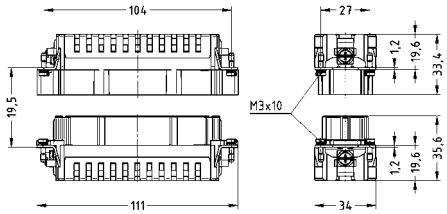 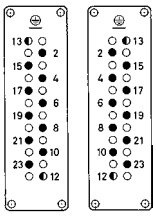 Contact arrangement (view from termination side) Han® 10 Hv ES ◆ Working contact ◐ Relay contact ○ Without contact 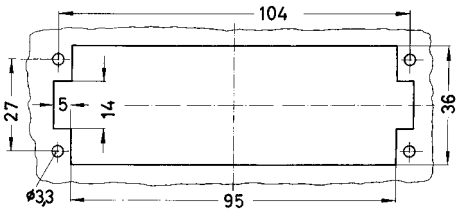 Panel cut out for inserts for use without hoods/housings

Number of contacts

12+ ⏚

830 V
16 A
+ 4 additional contacts for safe high voltage connections

Identification	Wire cross section (mm²)	Part number male	Part number female	Drawing Dimensions in mm
Han® Hv ES, Cage-clamp terminal, silver plated contacts, contact resistance ≤3 mOhm 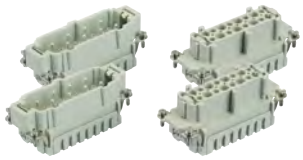 not plug compatible to Han Hv E® screw/crimp terminal Please order two inserts for a complete assembly!	0.14 – 2.5	09 34 006 2616	09 34 006 2716	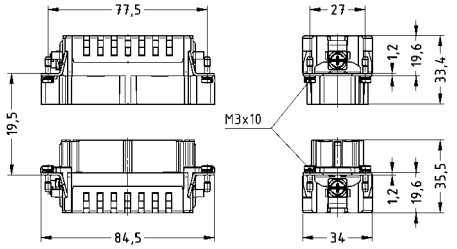 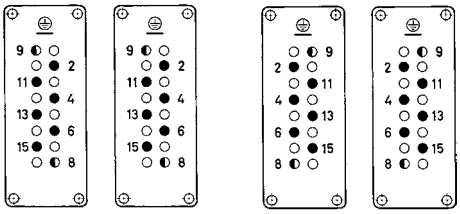 M F Contact arrangement (view from termination side) Han® 12 Hv ES 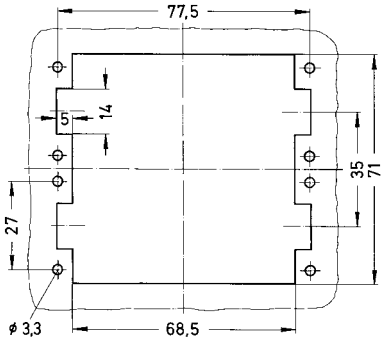 Panel cut out for inserts for use without hoods/housings

Number of contacts

20+ ⏚

830 V
16 A
+ 4 additional contacts for safe high voltage connections

Identification	Wire cross section (mm²)	Part number male	Part number female	Drawing Dimensions in mm
Han® Hv ES, Cage-clamp terminal, silver plated contacts, contact resistance ≤3 mOhm 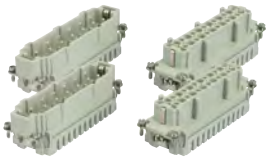 not plug compatible to Han Hv E® screw/crimp terminal Please order two inserts for a complete assembly!	0.14 – 2.5	09 34 010 2616	09 34 010 2716	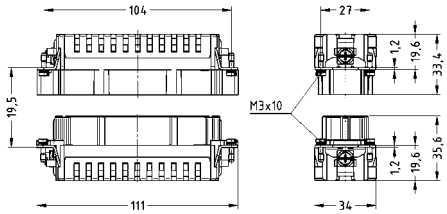 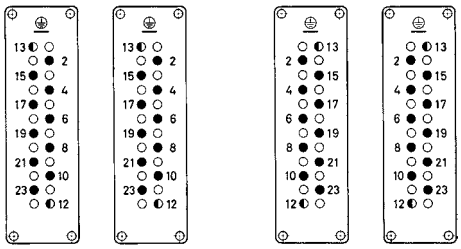 M F Contact arrangement (view from termination side) Han® 20 Hv ES 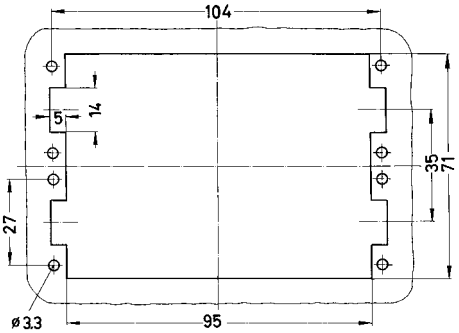 Panel cut out for inserts for use without hoods/housings

Technical characteristics

Material (contact)	copper alloy

Specifications and approvals

IEC 60664-1
IEC 61984

Details

Crimping tools see chapter 90

Remarks on the crimp technique

The wire gauges mentioned in the catalogue refer to geometric wire gauges of cables.

Identification	Wire cross section (mm²)	Part number male	Part number female	Drawing Dimensions in mm
Han E®, Crimp contact, silver plated contacts, contact resistance ≤1 mOhm	0.5 0.75 1 1.5 2.5 3 4	09 33 000 6121 09 33 000 6114 09 33 000 6105 09 33 000 6104 09 33 000 6102 09 33 000 6106 09 33 000 6107	09 33 000 6220 09 33 000 6214 09 33 000 6205 09 33 000 6204 09 33 000 6202 09 33 000 6206 09 33 000 6207	
Han E®, Relay contact, silver plated contacts, contact resistance ≤1 mOhm	0.75 – 1 1.5 2.5	09 33 000 6109 09 33 000 6110 09 33 000 6111		

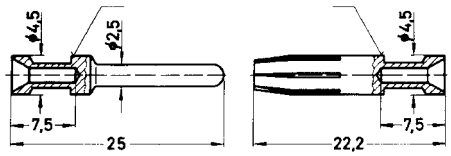

Identification	Wire gauge		Stripping length
no groove	0.14-0.37 mm²	AWG 26-22	7.5 mm
no groove	0.5 mm²	AWG 20	7.5 mm
1 groove*	0.75 mm²	AWG 18	7.5 mm
1 groove	1 mm²	AWG 18	7.5 mm
2 grooves	1.5 mm²	AWG 16	7.5 mm
3 grooves	2.5 mm²	AWG 14	7.5 mm
wide groove	3 mm²	AWG 12	7.5 mm
no groove	4 mm²	AWG 12	7.5 mm

* on the back crimp collar

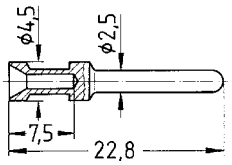

Stripping length 7.5 mm

Technical characteristics

Limiting temperatures	-40 °C ... 125 °C
Flammability (locking lever) acc. to UL 94	V 0
Degree of protection acc. to IEC 60529	IP65
Material (hoods/housings)	aluminium
Surface (hoods/housings)	powder-coated
Colour (hoods/housings)	RAL 7037 (grey)
Material (locking lever)	polycarbonate + stainless steel
Material (seal)	NBR

Specifications and approvals

NEMA 4/4x/12

GL

Details

Standard hoods/housings see chapter 31

Special hood/housing for Han Hv E® screw terminal
double locking lever

Identification	Cable entry	Part number	Drawing Dimensions in mm
Han Hv E®, Hoods, side entry	1xM20	19 34 003 0520	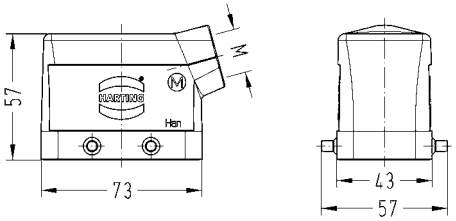
Han Hv E®, Hoods, top entry	1xM20 1xM25	19 34 003 0420 19 34 003 0421	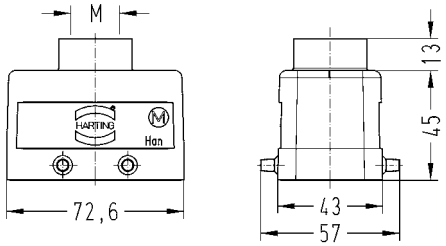
Han Hv E®, Bulkhead mounted housings, Han-Easy Lock®		09 34 003 0301	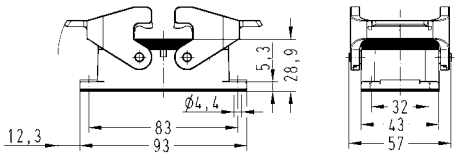 Panel cut out 60 x 35 mm
Han Hv E®, Surface mounted housings, side entry, Han-Easy Lock®	2xM20	19 34 003 0270	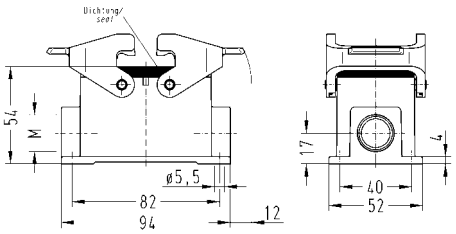
Han Hv E®, Cable to cable housings, top entry, Han-Easy Lock®	1xM20 1xM25	19 34 003 0730 19 34 003 0731	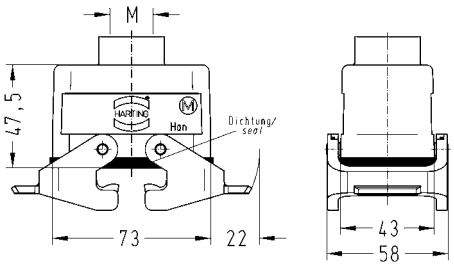

Special hood/housing for Han Hv E® screw terminal
double locking lever

Identification	Cable entry	Part number	Drawing Dimensions in mm
Han Hv E®, Hoods, side entry	1xM25	19 34 006 0521	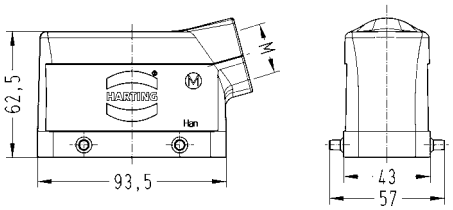
Han Hv E®, Hoods, top entry	1xM25	19 34 006 0421	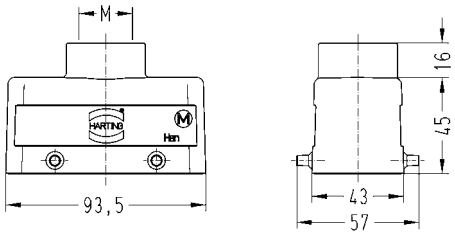
Han Hv E®, Bulkhead mounted housings, Han-Easy Lock®		09 34 006 0301	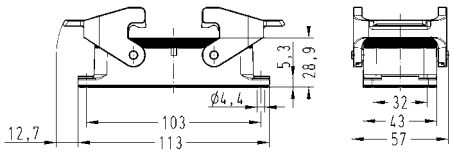 Panel cut out 82 x 35mm
Han Hv E®, Surface mounted housings, side entry, Han-Easy Lock®	2xM25	19 34 006 0271	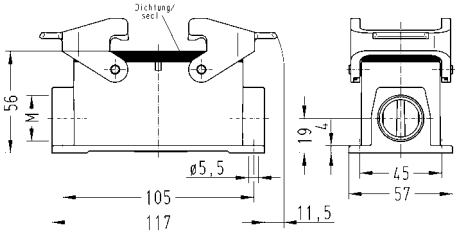
Han Hv E®, Cable to cable housings, top entry, Han-Easy Lock®	1xM25 1xM32	19 34 006 0731 19 34 006 0732	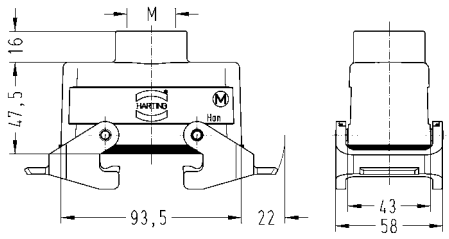

Special hood/housing for Han Hv E® screw terminal
double locking lever

Identification	Cable entry	Part number	Drawing Dimensions in mm
Han Hv E®, Hoods, side entry	1xM25	19 34 010 0521	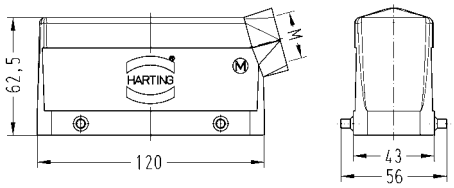
Han Hv E®, Hoods, top entry	1xM32	19 34 010 0422	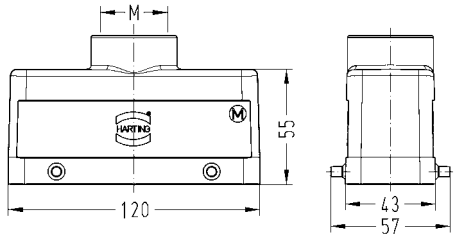
Han Hv E®, Bulkhead mounted housings, Han-Easy Lock®		09 34 010 0301	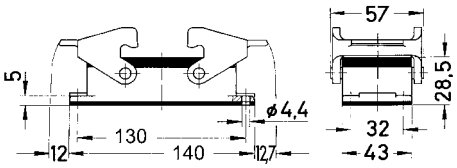 Panel cut out 108 x 35 mm
Han Hv E®, Surface mounted housings, side entry, Han-Easy Lock®	2xM25	19 34 010 0271	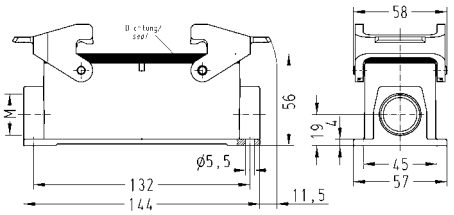
Han Hv E®, Cable to cable housings, top entry, Han-Easy Lock®	1xM32	19 34 010 0732	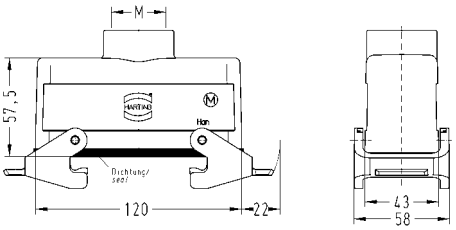

Contents | Page

Han® K 4/4	**05.8**
Han® K 8/24	**05.10**
Han® K 4/0	**05.13**
Han® K 4/2	**05.15**
Han® K 6/12	**05.17**
Han® K 6/36	**05.19**
Han® K 12/2	**05.22**
Han® K 4/8	**05.25**
Han® K 6/6	**05.27**
Han® K 8/0	**05.29**

Size	Description		
10 B		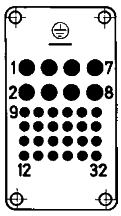	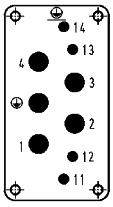
		Han® K 8/24	Han® K 4/4
	Power area	16 A / 230/400 V	63 A / 690 V
	Signal area	10 A / 160 V	16 A / 230 V
16 B		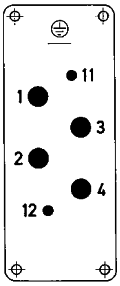	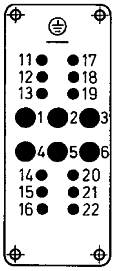	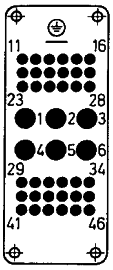	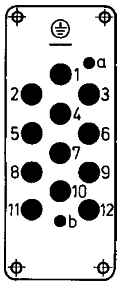
		Han® K 4/0, 4/2	Han® K 6/12	Han® K 6/36	Han® K 12/2
	Power area	80 A / 830 V	40 A / 690 V	40 A / 690 V	40 A / 690 V
	Signal area	16 A / 400 V	10 A / 230/400 V	10 A / 160 V	10 A / 250 V
24 B		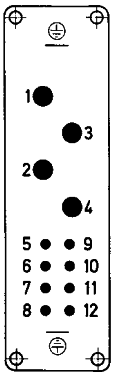	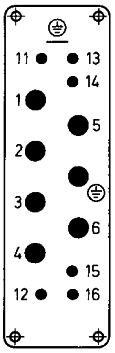	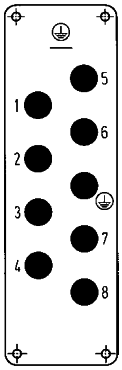
		Han® K 4/8	Han® K 6/6	Han® K 8/0
	Power area	80 A / 400 V	100 A / 690 V	100 A / 690 V
	Signal area	16 A / 400 V	16 A / 400 V	
32 B	suitable for 2 inserts of size 16 B			
48 B	suitable for 2 inserts of size 24 B			

Summary

Type	Technical characteristics								Suitable Hoods/ Housings
	Power area				Signal area				
	Number of contacts	A	V ~	Termination	Number of contacts	A	V ~	Termination	Size
Han® K 4/0	4+PE	80	830	screw	—	—	—	—	16 B, 32 B
Han® K 4/2	4+PE	80	830	screw	2	16	400	screw	16 B, 32 B
Han® K 4/4	4+PE	63	690	axial screw	4	16	250	cage clamp	10 B
Han® K 4/8	4+PE	80	400	screw	8	16	400	screw	24 B, 48 B
Han® K 6/6	6+PE	100	690	axial screw	6	16	400	screw	24 B, 48 B
Han® K 6/12	6+PE	40	690	axial screw	12	10	230/400	screw	16 B, 32 B
Han® K 6/36	6+PE	40	690	crimp	36	10	160	crimp	16 B, 32 B
Han® K 8/0	8+PE	100	690	axial screw	—	—	—	—	24 B, 48 B
Han® K 8/24	8+PE	16	230/400	crimp	24	10	160	crimp	10 B
Han® K 12/2	12+PE	40	690	crimp	2	10	250	crimp	16 B, 32 B

Type identification

Han® K 6/12

Han®	Industrial connectors Han®
K	Series Han® K / Han-Com®
6	Number of power contacts
12	Number of signal contacts

Identification of contact position

Han® K connectors	from 1 to ... (power area) from 11 to... (signal area)
Exceptions	
Han® K 4/8 and Han® K 8/24	from 1 to ... (consecutively)
Han® K 12/2	from 1 to 12 (power area) with „a“ and „b“ (signal area)

Comment for users

For the combination of several circuits in one cable and/or e.g. one connector the following standards are valid:
DIN VDE 0100-410/06.2007 § 411.3.1.1 and DIN EN 60 204/06.2007 § 13.1.3

Accessories

Crimping tools	chapter 90
Cable clamps	chapter 80
Coding of hoods/housings	chapter 80
Label acc. to CSA-approval	chapter 80
Han-Snap®	chapter 11
PCB adapter	chapter 80

Description	Depiction	Dimensions in mm

Han-Com

Step 1:

Signal contacts:
Push screwdriver (0.5 x 3.5) into rectangular chamber. Strip insulation from the wire with a length and insert the wire into the round contact chamber.

Power contacts:
Strip insulation from the wire with a length and insert the wire into the contact chamber until insulation is flush with contact.
Do not twist the strands of the wire.

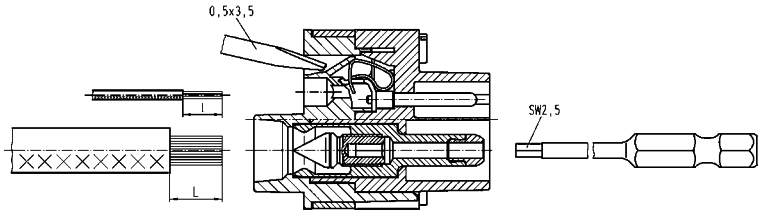

l: Stripping length for signal contacts

L: Stripping length for power contacts

Step 2:

Signal contacts:
Push screwdriver (0.5 x 3.5) out of rectangular chamber.

Power contacts:
Hold the wire in position and tighten by a hexagonal driver (SW 2.5) from the mating side with a tightening torque.

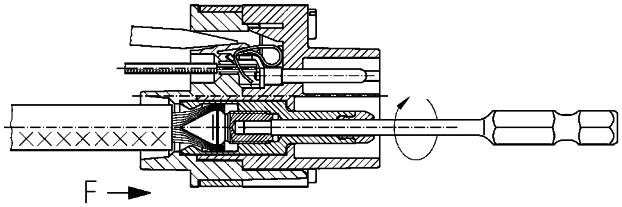

Step 3:

Complete connection

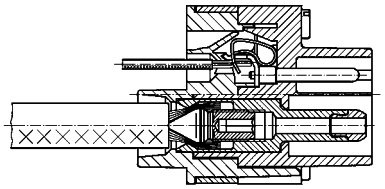

The male insert is shown. The same method is applicable for female inserts.

Assembly instructions Han® K 6/12

Description	Depiction	Dimensions in mm

Step 1:

Signal contacts:
Strip insulation from the wire with a length and insert the wire into the rectangular contact chamber.

Power contacts:
Strip insulation from the wire with a length and insert the wire into the contact chamber until insulation is flush with contact.
Do not twist the strands of the wire.

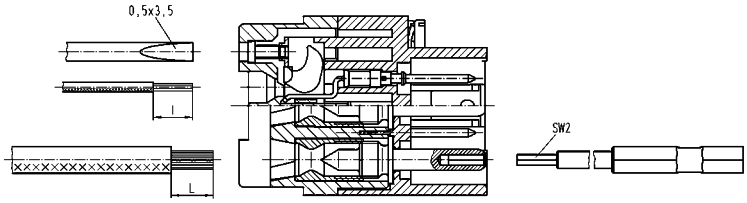

l: Stripping length for signal contacts

L: Stripping length for power contacts

Step 2:

Signal contacts:
Tighten screw termination with screwdriver (0.5 x 3.5) with a tightening torque.

Power contacts:
Hold the wire in position and tighten by a hexagonal driver (SW 2) from the mating side with a tightening torque.

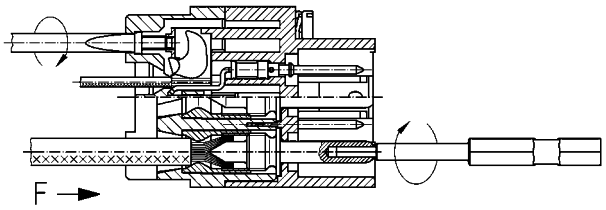

Step 3:

Complete connection

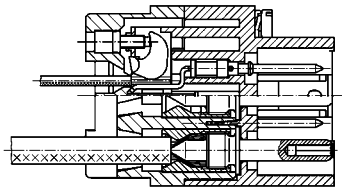

Han-Com

The male insert is shown. The same method is applicable for female inserts.

Assembly instructions Han® K 6/6

Description	Depiction	Dimensions in mm

Han-Com

Step 1:

Signal contacts:
Strip insulation from the wire with a length and insert the wire into the rectangular contact chamber.

Power contacts:
Strip insulation from the wire with a length and insert the wire into the contact chamber until insulation is flush with contact.
Do not twist the strands of the wire.

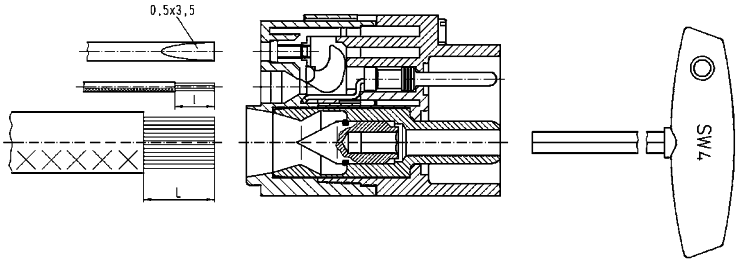

l: Stripping length for signal contacts

L: Stripping length for power contacts

Step 2:

Signal contacts:
Tighten screw termination with screwdriver (0.5 x 3.5) with a tightening torque.

Power contacts:
Hold the wire in position and tighten by a hexagonal driver (SW 4) from the mating side with a tightening torque.

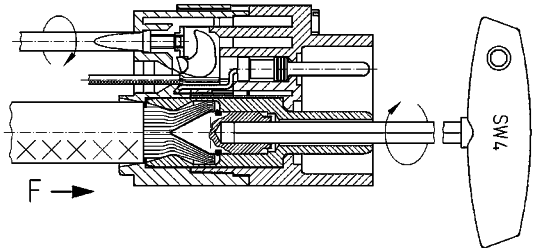

Step 3:

Complete connection

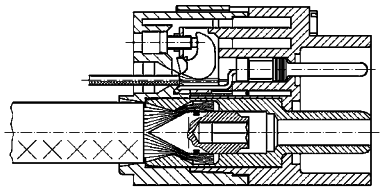

The male insert is shown. The same method is applicable for female inserts.

Assembly instructions Han® K 8/0

Description	Depiction	Dimensions in mm

Step 1:
Strip insulation from the wire with a length and insert the wire into the contact chamber until insulation is flush with contact.
Do not twist the strands of the wire.

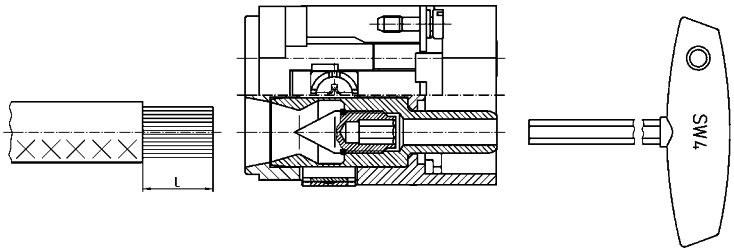

L: Stripping length for power contacts

Step 2:
Hold the wire in position and tighten by a hexagonal driver (SW 4) from the mating side with a tightening torque.

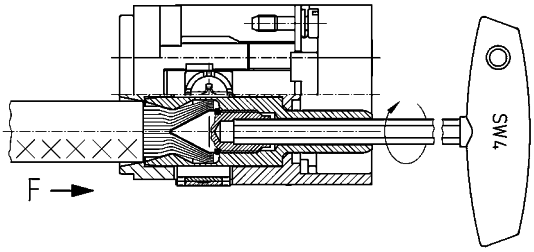

Step 3:
Complete connection

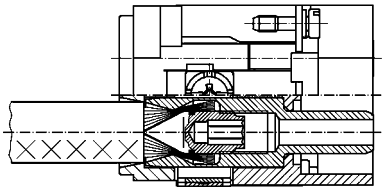

Han-Com

The male insert is shown. The same method is applicable for female inserts.

Features

- Combination of power and signal area in one connector
- Axial screw termination for power area
- Cage clamp termination for signal area
- Same range of wire cross section for PE contacts and power contacts

Derating

Current carrying capacity

The current carrying capacity of the connectors is limited by the thermal load capability of the contact element material including the connections and the insulating parts. The derating curve is therefore valid for currents which flow constantly (non-intermittent) through each contact element of the connector evenly, without exceeding the allowed maximum temperature.

Measuring and testing techniques acc. to IEC 60512-5-2

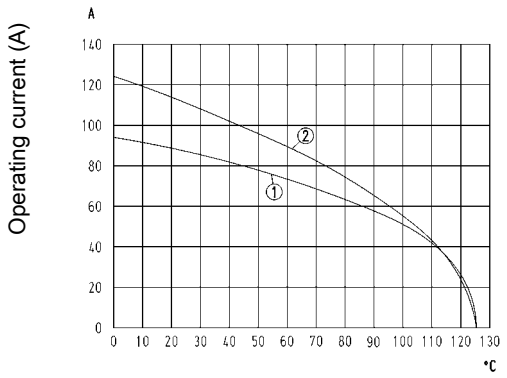

Ambient temperature (C°)

① Wire cross section 16 mm²
② Wire cross section 22 mm²

Technical characteristics

Contacts	4/4
Electrical data acc. to IEC 61984	**63 A 690 V 8 kV 3**
Rated current	63 A
Rated voltage	690 V
Rated impulse voltage	8 kV
Pollution degree	3
Electrical data, signal	**16 A 250 V 4 kV 3**
Rated current	16 A
Rated voltage	250 V
Rated impulse voltage	4 kV
Rated voltage acc. to UL	600 V
Rated voltage acc. to UL, signal	230 V
Insulation resistance	≥10^{10} Ohm
Limiting temperatures	-40 °C ... 125 °C
Flammability (insert) acc. to UL 94	V 0
Mating cycles	≥500
Material (insert)	polycarbonate
Colour (insert)	RAL 7032 (light grey)
Material (contact)	copper alloy
Material (contact, signal area)	copper alloy
Hex key	SW 2.5

Specifications and approvals

IEC 60664-1
IEC 61984

Details

Hoods/Housings see chapter 31

Hex key 09 99 000 0375 see chapter 90

Remarks on the axial screw technique

The wire gauges mentioned in the catalogue refer to geometric wire gauges of cables.

Number of contacts

4/4+ ⏚

690 V / 250 V
63 A/16 A

Identification	Wire cross section (mm²)	Part number male	Part number female	Drawing Dimensions in mm
Han-Com®, Axial screw terminal / Cage-clamp terminal, silver plated contacts, contact resistance ≤0.5 mOhm contact resistance, signal ≤3 mOhm finger safe	6 – 16 10 – 22	09 38 008 2601 09 38 008 2602	09 38 008 2701 09 38 008 2702	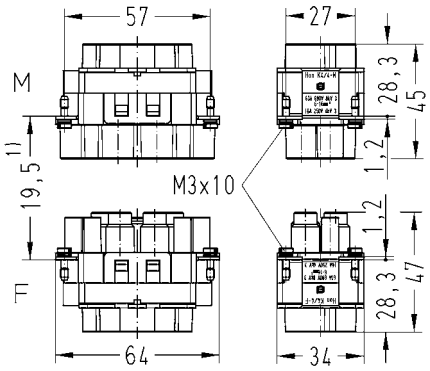 1) Distance for contact max. 21 mm
Han-Com®, Axial screw terminal / Cage-clamp terminal, silver plated contacts, contact resistance ≤0.5 mOhm contact resistance, signal ≤3 mOhm not finger safe	6 – 16 10 – 22	09 38 008 2611 09 38 008 2612		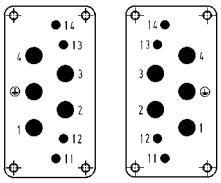 Contact arrangement (view from termination side) power contacts wire gauge / tightening tourque / stripping length / max. insulation diameter 6 mm² / 2 Nm / 11 … 12 mm / 8.9 mm 10 mm² / 3 Nm / 11 … 12 mm / 8.9 mm 16 mm² / 4 Nm / 11 … 12 mm / 8.9 mm 22 mm² / 4 Nm / 13 … 14 mm / 11mm Signal contacts : Wire cross section 0.14 ... 2.5 mm² Stripping length 7 ... 9 mm

Features

- Combination of power and signal area in one connector
- Crimp termination for power and signal area
- Use of standard Han E® and Han D® contacts

Derating

Current carrying capacity

The current carrying capacity of the connectors is limited by the thermal load capability of the contact element material including the connections and the insulating parts. The derating curve is therefore valid for currents which flow constantly (non-intermittent) through each contact element of the connector evenly, without exceeding the allowed maximum temperature.

Measuring and testing techniques acc. to IEC 60512-5-2

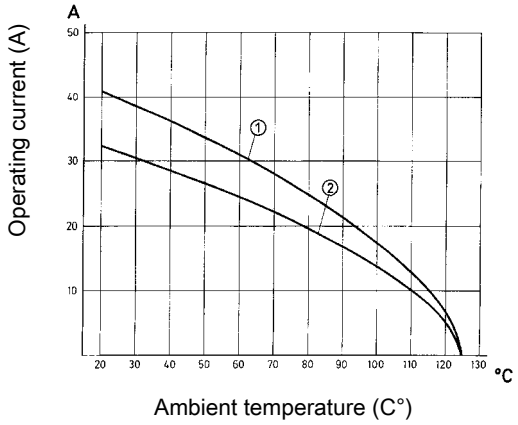

① Wire cross section 4 mm²
② Wire cross section 2.5 mm²

Technical characteristics

Contacts	8/24
Electrical data acc. to IEC 61984	**16 A 230/400 V 4 kV 3**
Rated current	16 A
Rated voltage conductor - ground	230 V
Rated voltage conductor - conductor	400 V
Rated impulse voltage	4 kV
Pollution degree	3
Electrical data, signal	**10 A 160 V 2.5 kV 3**
Rated current	10 A
Rated voltage	160 V
Rated impulse voltage	2.5 kV
Rated voltage acc. to UL	600 V
Rated voltage acc. to UL, signal	600 V
Rated voltage acc. to CSA	300 V
Rated voltage acc. to CSA, signal	300 V
Insulation resistance	≥10^{10} Ohm
Limiting temperatures	-40 °C ... 125 °C
Flammability (insert) acc. to UL 94	HB
Mating cycles	≥500
Material (insert)	polyamide
Colour (insert)	RAL 7032 (light grey)
Material (contact)	copper alloy
Material (contact, signal area)	copper alloy

Specifications and approvals

IEC 60664-1
IEC 61984

Details

Hoods/Housings see chapter 31

Crimping tools see chapter 90

Remarks on the crimp technique

The wire gauges mentioned in the catalogue refer to geometric wire gauges of cables.

Removal of power contacts (Han E®)

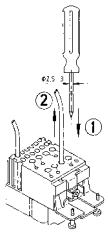

① Push cross-slotted screw driver (size 0) in the relevant hole of the contact until it reaches the bottom
② Withdraw the crimped contact from the insert

Number of contacts

8/24+ ⏚

230/400 V / 160 V
16 A/10 A

Identification	Wire cross section (mm²)	Part number male	Part number female	Drawing Dimensions in mm
Han-Com®, Crimp terminal Please order crimp contacts separately.		09 38 032 3001	09 38 032 3101	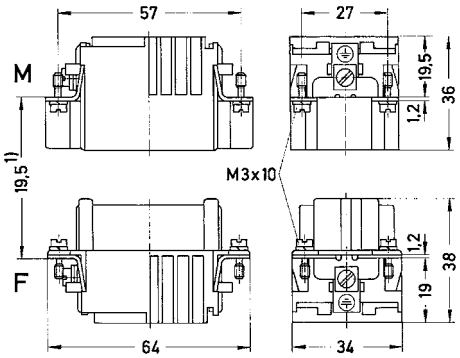 1) Distance for contact max. 21 mm 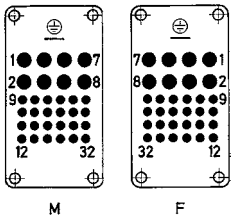 M F Contact arrangement (view from termination side)
Han D®, Crimp contact, gold plated contacts, contact resistance ≤3 mOhm 	0.14 – 0.37 0.5 0.75 1 1.5 2.5	09 15 000 6124 09 15 000 6123 09 15 000 6125 09 15 000 6122 09 15 000 6121 09 15 000 6126	09 15 000 6224 09 15 000 6223 09 15 000 6225 09 15 000 6222 09 15 000 6221 09 15 000 6226	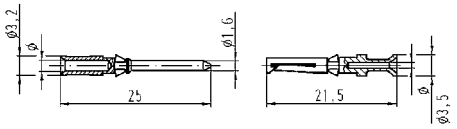 Wire gauge ⌀ Stripping length 0.14-0.37 mm² AWG 26-22 0.9 mm 8 mm 0.5 mm² AWG 20 1.1 mm 8 mm 0.75 mm² AWG 18 1.3 mm 8 mm 1 mm² AWG 18 1.45 mm 8 mm 1.5 mm² AWG 16 1.75 mm 8 mm 2.5 mm² AWG 14 2.25 mm 6 mm
Han D®, Crimp contact, silver plated contacts, contact resistance ≤3 mOhm 	0.14 – 0.37 0.5 0.75 1 1.5 2.5	09 15 000 6104 09 15 000 6103 09 15 000 6105 09 15 000 6102 09 15 000 6101 09 15 000 6106	09 15 000 6204 09 15 000 6203 09 15 000 6205 09 15 000 6202 09 15 000 6201 09 15 000 6206	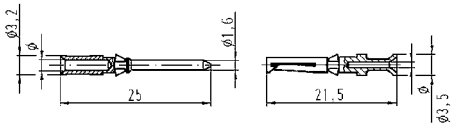 Wire gauge ⌀ Stripping length 0.14-0.37 mm² AWG 26-22 0.9 mm 8 mm 0.5 mm² AWG 20 1.1 mm 8 mm 0.75 mm² AWG 18 1.3 mm 8 mm 1 mm² AWG 18 1.45 mm 8 mm 1.5 mm² AWG 16 1.75 mm 8 mm 2.5 mm² AWG 14 2.25 mm 6 mm

Identification	Wire cross section (mm²)	Part number male	Part number female	Drawing Dimensions in mm
Han E®, Crimp contact, gold plated contacts, contact resistance ≤1 mOhm	0.5 0.75 1 1.5 2.5 4	09 33 000 6122 09 33 000 6115 09 33 000 6118 09 33 000 6116 09 33 000 6123 09 33 000 6119	09 33 000 6222 09 33 000 6215 09 33 000 6218 09 33 000 6216 09 33 000 6223 09 33 000 6221	
Han E®, Crimp contact, silver plated contacts, contact resistance ≤1 mOhm	0.5 0.75 1 1.5 2.5 4	09 33 000 6121 09 33 000 6114 09 33 000 6105 09 33 000 6104 09 33 000 6102 09 33 000 6107	09 33 000 6220 09 33 000 6214 09 33 000 6205 09 33 000 6204 09 33 000 6202 09 33 000 6207	
Han E®, Relay contact, silver plated contacts, contact resistance ≤1 mOhm	0.75 – 1 1.5 2.5	09 33 000 6109 09 33 000 6110 09 33 000 6111		
F.O. contact for 1 mm plastic fibre		20 10 001 3211	20 10 001 3221	

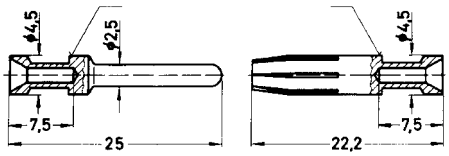

Identification	Wire gauge		Stripping length
no groove	0.14-0.37 mm²	AWG 26-22	7.5 mm
no groove	0.5 mm²	AWG 20	7.5 mm
1 groove*	0.75 mm²	AWG 18	7.5 mm
1 groove	1 mm²	AWG 18	7.5 mm
2 grooves	1.5 mm²	AWG 16	7.5 mm
3 grooves	2.5 mm²	AWG 14	7.5 mm
wide groove	3 mm²	AWG 12	7.5 mm
no groove	4 mm²	AWG 12	7.5 mm

* on the back crimp collar

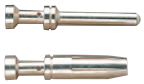

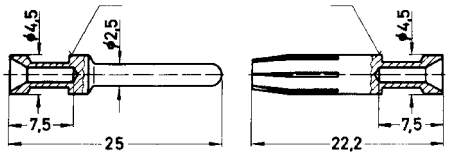

Identification	Wire gauge		Stripping length
no groove	0.14-0.37 mm²	AWG 26-22	7.5 mm
no groove	0.5 mm²	AWG 20	7.5 mm
1 groove*	0.75 mm²	AWG 18	7.5 mm
1 groove	1 mm²	AWG 18	7.5 mm
2 grooves	1.5 mm²	AWG 16	7.5 mm
3 grooves	2.5 mm²	AWG 14	7.5 mm
wide groove	3 mm²	AWG 12	7.5 mm
no groove	4 mm²	AWG 12	7.5 mm

* on the back crimp collar

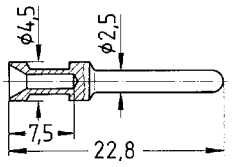

Stripping length 7.5 mm

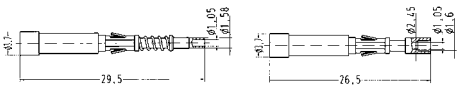

20 10 001 3211 + 20 10 001 3221

Han-Com

Features

- Screw terminal
- No signal contacts

Derating

Current carrying capacity

The current carrying capacity of the connectors is limited by the thermal load capability of the contact element material including the connections and the insulating parts. The derating curve is therefore valid for currents which flow constantly (non-intermittent) through each contact element of the connector evenly, without exceeding the allowed maximum temperature.

Measuring and testing techniques acc. to IEC 60512-5-2

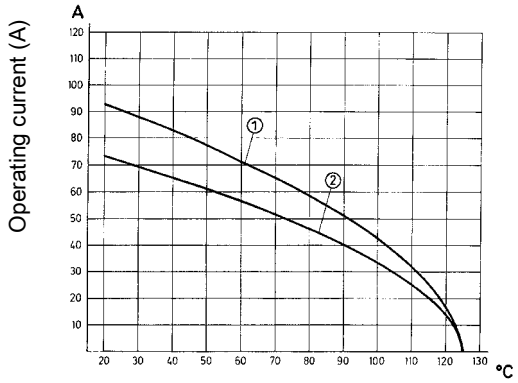

Ambient temperature (C°)

① Wire cross section 16 mm²
② Wire cross section 10 mm²

Technical characteristics

Contacts	4/0
Electrical data acc. to IEC 61984	**80 A 830 V 8 kV 3**
Rated current	80 A
Rated voltage	830 V
Rated impulse voltage	8 kV
Pollution degree	3
Rated voltage acc. to UL	600 V
Rated voltage acc. to CSA	300 V
Insulation resistance	≥10^{10} Ohm
Limiting temperatures	-40 °C ... 125 °C
Flammability (insert) acc. to UL 94	V 0
Mating cycles	<500
Material (insert)	polycarbonate
Colour (insert)	RAL 7032 (light grey)
Material (contact)	copper alloy

Specifications and approvals

IEC 60664-1
IEC 61984

Details

Hoods/Housings see chapter 31

In accordance with the appropriate regulations a wire-end sleeve has to be used at clamps without wire protection (see “screw terminal”, chapter 00).

Number of contacts

4/0+ ⏚

830 V
80 A

Han-Com

Identification	Wire cross section (mm²)	Part number male	Part number female	Drawing Dimensions in mm
Han-Com®, Screw terminal, silver plated contacts, contact resistance ≤0.3 mOhm 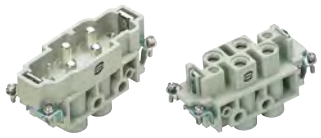	1.5 – 16	09 38 006 2611	09 38 006 2711	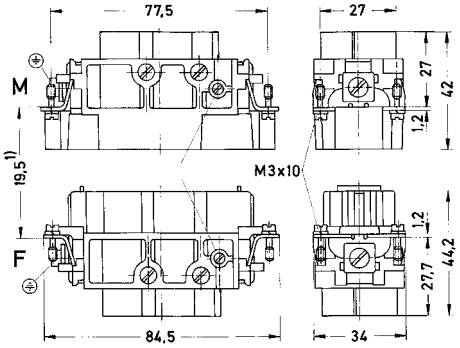 1) Distance for contact max. 21 mm 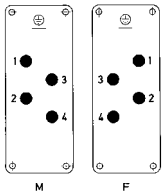 Contact arrangement (view from termination side)

power contacts		
wire gauge	tightening tourque	stripping length
1.5 mm²	1.2 Nm	14 mm
2.5 mm²	2 Nm	14 mm
4 mm²	3 Nm	14 mm
6 mm²	3 Nm	14 mm
10 mm²	3 Nm	14 mm
16 mm²	3 Nm	14 mm

Features

- Combination of power and signal area in one connector
- Screw termination for power and signal area

Derating

Current carrying capacity

The current carrying capacity of the connectors is limited by the thermal load capability of the contact element material including the connections and the insulating parts. The derating curve is therefore valid for currents which flow constantly (non-intermittent) through each contact element of the connector evenly, without exceeding the allowed maximum temperature.

Measuring and testing techniques acc. to IEC 60512-5-2

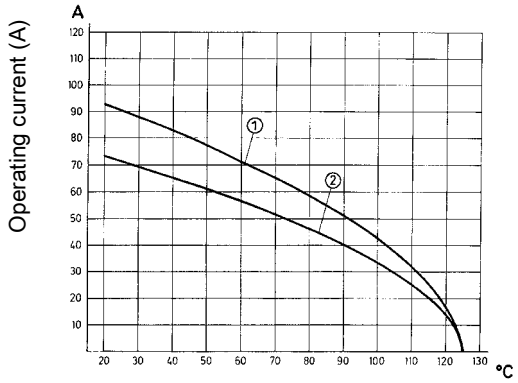

Ambient temperature (C°)

① Wire cross section 16 mm²
② Wire cross section 10 mm²

Technical characteristics

Contacts	4/2
Electrical data acc. to IEC 61984	**80 A 830 V 8 kV 3**
Rated current	80 A
Rated voltage	830 V
Rated impulse voltage	8 kV
Pollution degree	3
Electrical data, signal	**16 A 400 V 6 kV 3**
Rated current	16 A
Rated voltage	400 V
Rated impulse voltage	6 kV
Rated voltage acc. to UL	600 V
Rated voltage acc. to UL, signal	600 V
Rated voltage acc. to CSA	300 V
Rated voltage acc. to CSA, signal	300 V
Insulation resistance	≥10^{10} Ohm
Limiting temperatures	-40 °C ... 125 °C
Flammability (insert) acc. to UL 94	V 0
Mating cycles	≥500
Material (insert)	polycarbonate
Colour (insert)	RAL 7032 (light grey)
Material (contact)	copper alloy
Material (contact, signal area)	copper alloy

Specifications and approvals

IEC 60664-1
IEC 61984

Details

Hoods/Housings see chapter 31

In accordance with the appropriate regulations a wire-end sleeve has to be used at clamps without wire protection (see “screw terminal”, chapter 00).

Number of contacts

4/2+ ⏚

830 V / 400 V
80 A/16 A

Han-Com

Identification	Wire cross section (mm²)	Part number male	Part number female	Drawing Dimensions in mm
Han-Com®, Screw terminal / Screw terminal, silver plated contacts, contact resistance ≤0.3 mOhm contact resistance, signal ≤1 mOhm 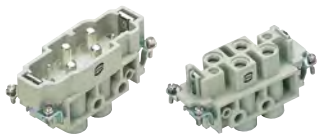	1.5 – 16	09 38 006 2601	09 38 006 2701	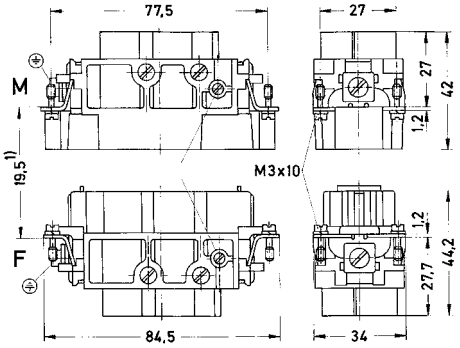 1) Distance for contact max. 21 mm 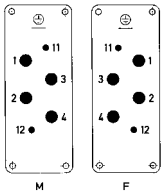 Contact arrangement (view from termination side)

power contacts		
wire gauge	tightening tourque	stripping length
1.5 mm²	1.2 Nm	14 mm
2.5 mm²	2 Nm	14 mm
4 mm²	3 Nm	14 mm
6 mm²	3 Nm	14 mm
10 mm²	3 Nm	14 mm
16 mm²	3 Nm	14 mm

Signal contacts :
Wire cross section 0.5 ... 2.5 mm²
Stripping length 7.5 mm

Features

- Combination of power and signal area in one connector
- Axial screw termination for power area
- Screw termination for signal area

Derating

Current carrying capacity

The current carrying capacity of the connectors is limited by the thermal load capability of the contact element material including the connections and the insulating parts. The derating curve is therefore valid for currents which flow constantly (non-intermittent) through each contact element of the connector evenly, without exceeding the allowed maximum temperature.

Measuring and testing techniques acc. to IEC 60512-5-2

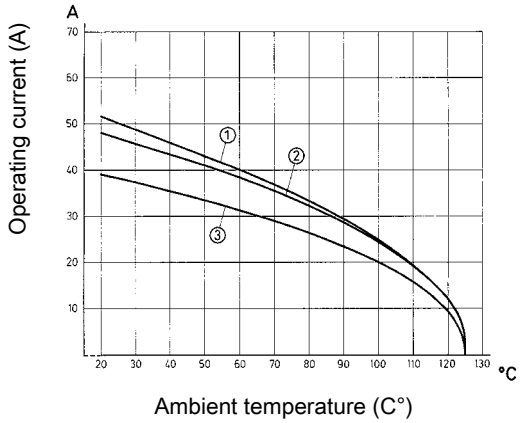

① Wire cross section 10 mm²
② Wire cross section 6 mm²
③ Wire cross section 4 mm²

Technical characteristics

Contacts	6/12
Electrical data acc. to IEC 61984	**40 A 690 V 8 kV 3**
Rated current	40 A
Rated voltage	690 V
Rated impulse voltage	8 kV
Pollution degree	3
Electrical data, signal	**10 A 230/400 V 4 kV 3**
Rated current	10 A
Rated voltage conductor - ground	230 V
Rated voltage conductor - conductor	400 V
Rated impulse voltage	4 kV
Rated voltage acc. to UL	600 V
Rated voltage acc. to UL, signal	600 V
Rated voltage acc. to CSA	300 V
Rated voltage acc. to CSA, signal	300 V
Insulation resistance	≥10^{10} Ohm
Limiting temperatures	-40 °C ... 125 °C
Flammability (insert) acc. to UL 94	V 0
Mating cycles	≥500
Material (insert)	polycarbonate
Colour (insert)	RAL 7032 (light grey)
Material (contact)	copper alloy
Material (contact, signal area)	copper alloy
Hex key	SW 2

Specifications and approvals

IEC 60664-1
IEC 61984

Details

Hoods/Housings see chapter 31

Hex key adapter 1/4“ 09 99 000 0369 see chapter 90

Remarks on the axial screw technique

The wire gauges mentioned in the catalogue refer to geometric wire gauges of cables.

Number of contacts

6/12+ ⏚

690 V / 230/400 V
40 A/10 A

Han-Com

Identification	Wire cross section (mm²)	Part number male	Part number female	Drawing Dimensions in mm
Han-Com®, Axial screw terminal / Screw terminal, silver plated contacts, contact resistance ≤0.5 mOhm contact resistance, signal ≤3 mOhm 	2.5 – 8 6 – 10	09 38 018 2601 09 38 018 2602	09 38 018 2701 09 38 018 2702	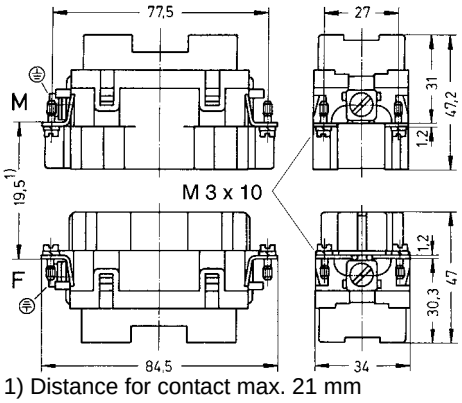 1) Distance for contact max. 21 mm 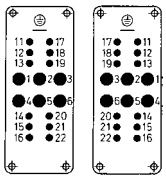 Contact arrangement (view from termination side)

power contacts			
wire gauge	tightening tourque	stripping length	max. insulation diameter
2.5 mm²	1.5 Nm	8 … 9 mm	6.1 mm
4 mm²	1.5 Nm	8 … 9 mm	6.1 mm
6 mm²	2 Nm	8 … 9 mm	6.1 mm
10 mm²	2 Nm	8 … 9 mm	6.1 mm

Signal contacts :
Wire cross section 0.2 ... 2.5 mm²
Stripping length 7.5 mm

Features

- Combination of power and signal area in one connector
- Crimp termination for power and signal area
- Use of standard Han® C and Han D® contacts

Derating

Current carrying capacity

The current carrying capacity of the connectors is limited by the thermal load capability of the contact element material including the connections and the insulating parts. The derating curve is therefore valid for currents which flow constantly (non-intermittent) through each contact element of the connector evenly, without exceeding the allowed maximum temperature.

Measuring and testing techniques acc. to IEC 60512-5-2

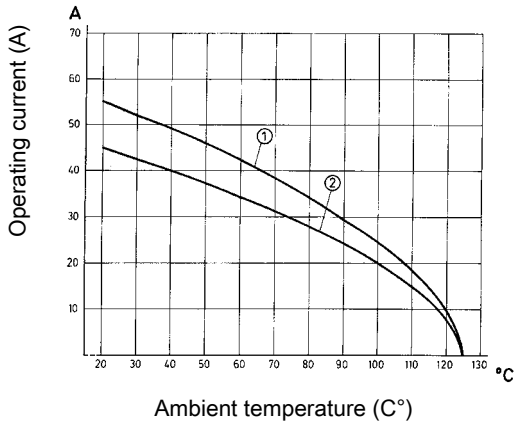

① Wire cross section 6 mm²
② Wire cross section 4 mm²

Technical characteristics

Contacts	6/36
Electrical data acc. to IEC 61984	**40 A 690 V 8 kV 3**
Rated current	40 A
Rated voltage	690 V
Rated impulse voltage	8 kV
Pollution degree	3
Electrical data, signal	**10 A 160 V 2.5 kV 3**
Rated current	10 A
Rated voltage	160 V
Rated impulse voltage	2.5 kV
Rated voltage acc. to UL	600 V
Rated voltage acc. to UL, signal	600 V
Rated voltage acc. to CSA	300 V
Rated voltage acc. to CSA, signal	300 V
Insulation resistance	≥10^{10} Ohm
Limiting temperatures	-40 °C ... 125 °C
Flammability (insert) acc. to UL 94	V 0
Mating cycles	≥500
Material (insert)	polycarbonate
Colour (insert)	RAL 7032 (light grey)
Material (contact)	copper alloy
Material (contact, signal area)	copper alloy

Specifications and approvals

IEC 60664-1
IEC 61984

Details

Hoods/Housings see chapter 31

Crimping tools see chapter 90

Remarks on the crimp technique

The wire gauges mentioned in the catalogue refer to geometric wire gauges of cables.

Number of contacts

6/36+ ⏚

690 V / 160 V
40 A/10 A

Han-Com

Identification	Wire cross section (mm²)	Part number male	Part number female	Drawing Dimensions in mm
Han-Com®, Crimp/crimp terminal Please order crimp contacts separately.		09 38 042 3001	09 38 042 3101	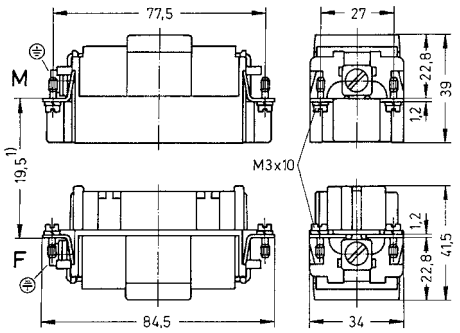 1) Distance for contact max. 21 mm Max. insulation diameter 5 mm 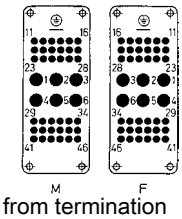 Contact arrangement (view from termination side)
Han D®, Crimp contact, gold plated contacts, contact resistance ≤3 mOhm 	0.14 – 0.37 0.5 0.75 1 1.5 2.5	09 15 000 6124 09 15 000 6123 09 15 000 6125 09 15 000 6122 09 15 000 6121 09 15 000 6126	09 15 000 6224 09 15 000 6223 09 15 000 6225 09 15 000 6222 09 15 000 6221 09 15 000 6226	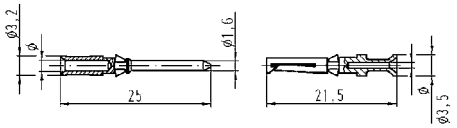 Wire gauge / Ø / Stripping length 0.14-0.37 mm² AWG 26-22 / 0.9 mm / 8 mm 0.5 mm² AWG 20 / 1.1 mm / 8 mm 0.75 mm² AWG 18 / 1.3 mm / 8 mm 1 mm² AWG 18 / 1.45 mm / 8 mm 1.5 mm² AWG 16 / 1.75 mm / 8 mm 2.5 mm² AWG 14 / 2.25 mm / 6 mm
Han D®, Crimp contact, silver plated contacts, contact resistance ≤3 mOhm 	0.14 – 0.37 0.5 0.75 1 1.5 2.5	09 15 000 6104 09 15 000 6103 09 15 000 6105 09 15 000 6102 09 15 000 6101 09 15 000 6106	09 15 000 6204 09 15 000 6203 09 15 000 6205 09 15 000 6202 09 15 000 6201 09 15 000 6206	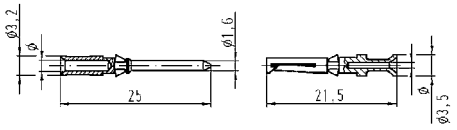 Wire gauge / Ø / Stripping length 0.14-0.37 mm² AWG 26-22 / 0.9 mm / 8 mm 0.5 mm² AWG 20 / 1.1 mm / 8 mm 0.75 mm² AWG 18 / 1.3 mm / 8 mm 1 mm² AWG 18 / 1.45 mm / 8 mm 1.5 mm² AWG 16 / 1.75 mm / 8 mm 2.5 mm² AWG 14 / 2.25 mm / 6 mm

Identification	Wire cross section (mm²)	Part number male	Part number female	Drawing Dimensions in mm
Han® C, Crimp contact, silver plated contacts, contact resistance ≤1 mOhm	1.5 2.5 4 6	09 32 000 6104 09 32 000 6105 09 32 000 6107 09 32 000 6108	09 32 000 6204 09 32 000 6205 09 32 000 6207 09 32 000 6208	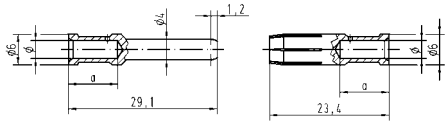
F.O. contact for 1 mm plastic fibre		20 10 001 3211	20 10 001 3221	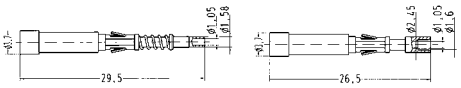 20 10 001 3211 + 20 10 001 3221

Wire gauge		⌀	Stripping length
1.5 mm²	AWG 16	1.75	9.5 mm
2.5 mm²	AWG 14	2.25	9.5 mm
4 mm²	AWG 12	2.85	9.5 mm
6 mm²	AWG 10	3.5	9.5 mm
10 mm²	AWG 8	4.3	12 mm

Features

- Combination of power and signal area in one connector
- Crimp termination for power and signal area
- Use of standard Han® C and Han D® contacts

Derating

Current carrying capacity

The current carrying capacity of the connectors is limited by the thermal load capability of the contact element material including the connections and the insulating parts. The derating curve is therefore valid for currents which flow constantly (non-intermittent) through each contact element of the connector evenly, without exceeding the allowed maximum temperature.

Measuring and testing techniques acc. to IEC 60512-5-2

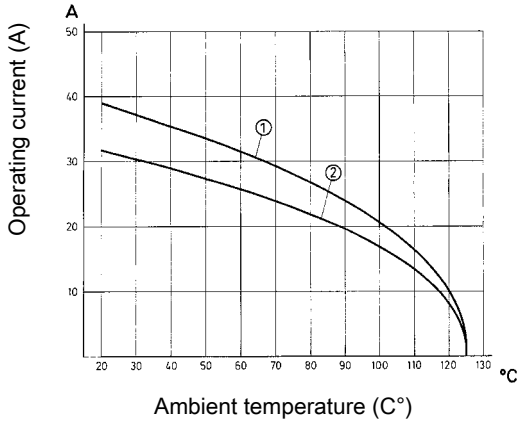

① Wire cross section 6 mm²
② Wire cross section 4 mm²

Technical characteristics

Contacts	12/2
Electrical data acc. to IEC 61984	**40 A 690 V 8 kV 3**
Rated current	40 A
Rated voltage	690 V
Rated impulse voltage	8 kV
Pollution degree	3
Electrical data, signal	**10 A 250 V 4 kV 3**
Rated current	10 A
Rated voltage	250 V
Rated impulse voltage	4 kV
Rated voltage acc. to UL	600 V
Rated voltage acc. to UL, signal	600 V
Rated voltage acc. to CSA	300 V
Rated voltage acc. to CSA, signal	300 V
Insulation resistance	≥10^{10} Ohm
Limiting temperatures	-40 °C ... 125 °C
Flammability (insert) acc. to UL 94	V 0
Mating cycles	≥500
Material (insert)	polycarbonate
Colour (insert)	RAL 7032 (light grey)
Material (contact)	copper alloy
Material (contact, signal area)	copper alloy

Specifications and approvals

IEC 60664-1
IEC 61984

Details

Hoods/Housings see chapter 31

Crimping tools see chapter 90

Remarks on the crimp technique

The wire gauges mentioned in the catalogue refer to geometric wire gauges of cables.

Number of contacts

12/2+ ⏚

690 V / 250 V
40 A/10 A

Identification	Wire cross section (mm²)	Part number male	Part number female	Drawing Dimensions in mm
Han-Com®, Crimp/crimp terminal Please order crimp contacts separately.		09 32 012 3001	09 32 012 3101	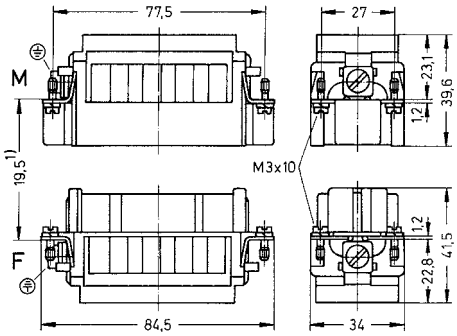 1) Distance for contact max. 21 mm Max. insulation diameter 5 mm 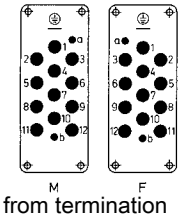 Contact arrangement (view from termination side)
Han D®, Crimp contact, gold plated contacts, contact resistance ≤3 mOhm 	0.14 – 0.37 0.5 0.75 1 1.5 2.5	09 15 000 6124 09 15 000 6123 09 15 000 6125 09 15 000 6122 09 15 000 6121 09 15 000 6126	09 15 000 6224 09 15 000 6223 09 15 000 6225 09 15 000 6222 09 15 000 6221 09 15 000 6226	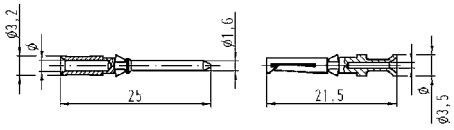 Wire gauge / ⌀ / Stripping length 0.14-0.37 mm² AWG 26-22 / 0.9 mm / 8 mm 0.5 mm² AWG 20 / 1.1 mm / 8 mm 0.75 mm² AWG 18 / 1.3 mm / 8 mm 1 mm² AWG 18 / 1.45 mm / 8 mm 1.5 mm² AWG 16 / 1.75 mm / 8 mm 2.5 mm² AWG 14 / 2.25 mm / 6 mm
Han D®, Crimp contact, silver plated contacts, contact resistance ≤3 mOhm 	0.14 – 0.37 0.5 0.75 1 1.5 2.5	09 15 000 6104 09 15 000 6103 09 15 000 6105 09 15 000 6102 09 15 000 6101 09 15 000 6106	09 15 000 6204 09 15 000 6203 09 15 000 6205 09 15 000 6202 09 15 000 6201 09 15 000 6206	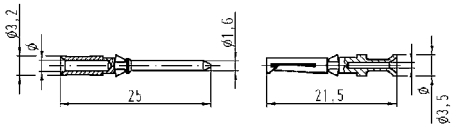 Wire gauge / ⌀ / Stripping length 0.14-0.37 mm² AWG 26-22 / 0.9 mm / 8 mm 0.5 mm² AWG 20 / 1.1 mm / 8 mm 0.75 mm² AWG 18 / 1.3 mm / 8 mm 1 mm² AWG 18 / 1.45 mm / 8 mm 1.5 mm² AWG 16 / 1.75 mm / 8 mm 2.5 mm² AWG 14 / 2.25 mm / 6 mm

Identification	Wire cross section (mm²)	Part number male	Part number female	Drawing Dimensions in mm
Han® C, Crimp contact, silver plated contacts, contact resistance ≤1 mOhm	1.5 2.5 4 6	09 32 000 6104 09 32 000 6105 09 32 000 6107 09 32 000 6108	09 32 000 6204 09 32 000 6205 09 32 000 6207 09 32 000 6208	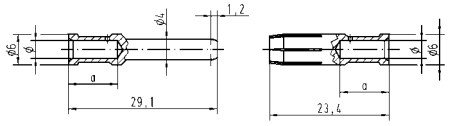
F.O. contact for 1 mm plastic fibre		20 10 001 3211	20 10 001 3221	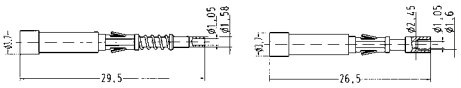 20 10 001 3211 + 20 10 001 3221

Wire gauge		⌀	Stripping length
1.5 mm²	AWG 16	1.75	9.5 mm
2.5 mm²	AWG 14	2.25	9.5 mm
4 mm²	AWG 12	2.85	9.5 mm
6 mm²	AWG 10	3.5	9.5 mm
10 mm²	AWG 8	4.3	12 mm

Features

- Combination of power and signal area in one connector
- Screw termination for power and signal area

Derating

Current carrying capacity

The current carrying capacity of the connectors is limited by the thermal load capability of the contact element material including the connections and the insulating parts. The derating curve is therefore valid for currents which flow constantly (non-intermittent) through each contact element of the connector evenly, without exceeding the allowed maximum temperature.

Measuring and testing techniques acc. to IEC 60512-5-2

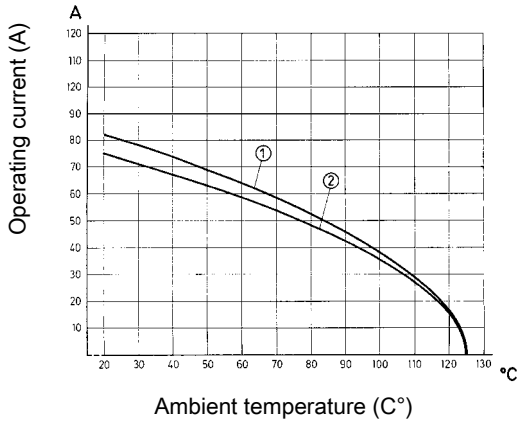

① Wire cross section 16 mm²
② Wire cross section 10 mm²

Technical characteristics

Contacts	4/8
Electrical data acc. to IEC 61984	**80 A 400 V 6 kV 3**
Rated current	80 A
Rated voltage	400 V
Rated impulse voltage	6 kV
Pollution degree	3
Electrical data, signal	**16 A 400 V 6 kV 3**
Rated current	16 A
Rated voltage	400 V
Rated impulse voltage	6 kV
Rated voltage acc. to UL	600 V
Rated voltage acc. to UL, signal	600 V
Rated voltage acc. to CSA	600 V
Rated voltage acc. to CSA, signal	600 V
Insulation resistance	≥10^{10} Ohm
Limiting temperatures	-40 °C ... 125 °C
Flammability (insert) acc. to UL 94	HB
Mating cycles	≥500
Material (insert)	polyamide
Colour (insert)	RAL 7032 (light grey)
Material (contact)	copper alloy
Material (contact, signal area)	copper alloy

Specifications and approvals

IEC 60664-1
IEC 61984

Details

Hoods/Housings see chapter 31

In accordance with the appropriate regulations a wire-end sleeve has to be used at clamps without wire protection (see “screw terminal”, chapter 00).

Number of contacts

4/8+ ⏚

400 V / 400 V
80 A/16 A

Han-Com

Identification	Wire cross section (mm²)	Part number male	Part number female	Drawing Dimensions in mm
Han-Com®, Screw terminal / Screw terminal, silver plated contacts, contact resistance ≤0.3 mOhm contact resistance, signal ≤1 mOhm 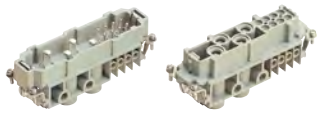	1.5 – 16	09 38 012 2601	09 38 012 2701	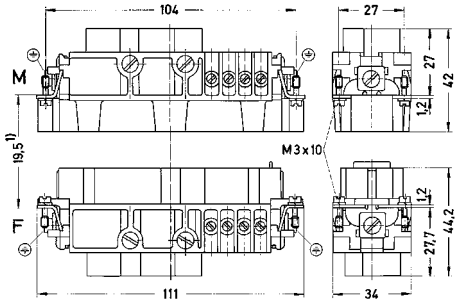 1) Distance for contact max. 21 mm 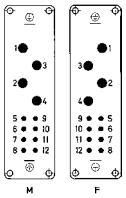 Contact arrangement (view from termination side) Signal contacts : Wire cross section 0.5 ... 2.5 mm² Stripping length 7.5 mm

power contacts		
wire gauge	tightening tourque	stripping length
1.5 mm²	1.2 Nm	14 mm
2.5 mm²	2 Nm	14 mm
4 mm²	3 Nm	14 mm
6 mm²	3 Nm	14 mm
10 mm²	3 Nm	14 mm
16 mm²	3 Nm	14 mm

Features

- Combination of power and signal area in one connector
- Axial screw termination for power area
- Screw termination for signal area

Derating

Current carrying capacity

The current carrying capacity of the connectors is limited by the thermal load capability of the contact element material including the connections and the insulating parts. The derating curve is therefore valid for currents which flow constantly (non-intermittent) through each contact element of the connector evenly, without exceeding the allowed maximum temperature.

Measuring and testing techniques acc. to IEC 60512-5-2

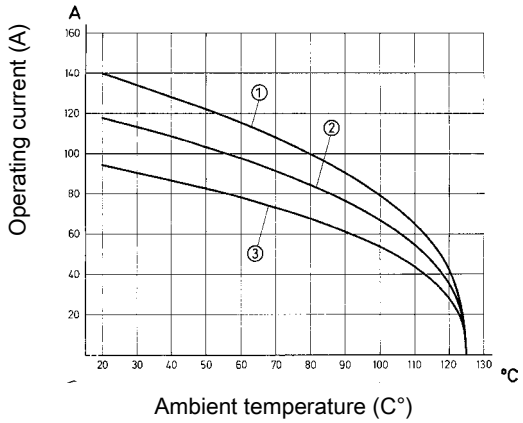

① Wire cross section 35 mm²
② Wire cross section 25 mm²
③ Wire cross section 16 mm²

Technical characteristics

Contacts	6/6
Electrical data acc. to IEC 61984	**100 A 690 V 8 kV 3**
Rated current	100 A
Rated voltage	690 V
Rated impulse voltage	8 kV
Pollution degree	3
Electrical data, signal	**16 A 400 V 6 kV 3**
Rated current	16 A
Rated voltage	400 V
Rated impulse voltage	6 kV
Rated current acc. to CSA	100 A
Rated current acc. to CSA, signal area	15 A
Rated voltage acc. to UL	600 V
Rated voltage acc. to UL, signal	300 V
Rated voltage acc. to CSA	600 V
Rated voltage acc. to CSA, signal	600 V
Insulation resistance	≥10^{10} Ohm
Limiting temperatures	-40 °C ... 125 °C
Flammability (insert) acc. to UL 94	V 0
Mating cycles	≥500
Material (insert)	polycarbonate
Colour (insert)	RAL 7032 (light grey)
Material (contact)	copper alloy
Material (contact, signal area)	copper alloy
Hex key	SW 4

Specifications and approvals

IEC 60664-1
IEC 61984

Details

Hoods/Housings see chapter 31

Hex key with grip 09 99 000 0363 see chapter 90
Adapter 3/8“ 09 99 000 0370 see chapter 90

Remarks on the axial screw technique
The wire gauges mentioned in the catalogue refer to geometric wire gauges of cables.

Number of contacts

6/6+ ⏚

690 V / 400 V
100 A/16 A

Han-Com

Identification	Wire cross section (mm²)	Part number male	Part number female	Drawing Dimensions in mm
Han-Com®, Axial screw terminal / Screw terminal, silver plated contacts, contact resistance ≤0.5 mOhm contact resistance, signal ≤3 mOhm 	16 – 35	09 38 012 2651	09 38 012 2751	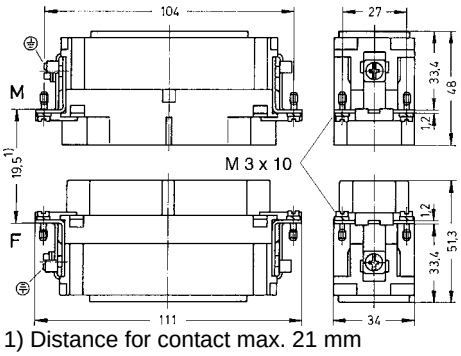 1) Distance for contact max. 21 mm 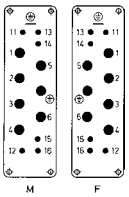 Contact arrangement (view from termination side)

power contacts			
wire gauge	tightening tourque	stripping length	max. insulation diameter
10 mm²	6 Nm	13 ... 14 mm	11.4 mm
25 mm²	7 Nm	13 ... 14 mm	11.4 mm
35 mm ²	8 Nm	13 ... 14 mm	11.4 mm

Signal contacts :
Wire cross section 0.2 ... 2.5 mm²
Stripping length 7.5 mm

Features

- Axial screw termination for power area
- No signal contacts

Derating

Current carrying capacity

The current carrying capacity of the connectors is limited by the thermal load capability of the contact element material including the connections and the insulating parts. The derating curve is therefore valid for currents which flow constantly (non-intermittent) through each contact element of the connector evenly, without exceeding the allowed maximum temperature.

Measuring and testing techniques acc. to IEC 60512-5-2

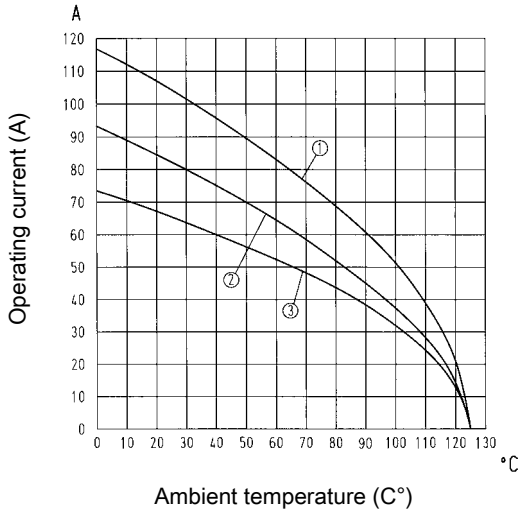

① Wire cross section 25 mm²
② Wire cross section 16 mm²
③ Wire cross section 10 mm²

Technical characteristics

Contacts	8/0
Electrical data acc. to IEC 61984	**100 A 690 V 8 kV 3**
Rated current	100 A
Rated voltage	690 V
Rated impulse voltage	8 kV
Pollution degree	3
Rated current acc. to UL	82 A
Rated voltage acc. to UL	600 V
Insulation resistance	≥10^{10} Ohm
Limiting temperatures	-40 °C ... 125 °C
Flammability (insert) acc. to UL 94	V 0
Mating cycles	≥500
Material (insert)	polycarbonate
Colour (insert)	RAL 7032 (light grey)
Material (contact)	copper alloy
Hex key	SW 4

Specifications and approvals

IEC 60664-1
IEC 61984

Details

Hoods/Housings see chapter 31

Hex key with grip 09 99 000 0363 see chapter 90
Adapter 3/8“ 09 99 000 0370 see chapter 90

Remarks on the axial screw technique

The wire gauges mentioned in the catalogue refer to geometric wire gauges of cables.

Number of contacts

8/0+ ⏚

690 V
100 A

Han-Com

Identification	Wire cross section (mm²)	Part number male	Part number female	Drawing Dimensions in mm
Han-Com®, Axial screw terminal, silver plated contacts, contact resistance ≤0.5 mOhm 	10 – 25	09 38 008 2653	09 38 008 2753	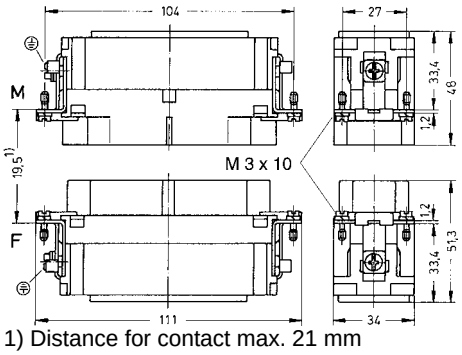 1) Distance for contact max. 21 mm 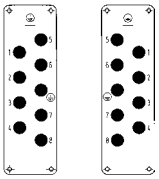 Contact arrangement (view from termination side)

power contacts			
wire gauge	tightening tourque	stripping length	max. insulation diameter
10 mm²	6 Nm	13 … 14 mm	11.4 mm
16 mm²	7 Nm	13 … 14 mm	11.4 mm
25 mm²	7 Nm	13 … 14 mm	11.4 mm

Contents | Page

Han® 200 A module	06.7
Han® 100 A module	06.10
Han® 100 A Single module	06.12
Han® 70 A module	06.14
Han® 70 A Hybrid module	06.17
Han® 40 A module	06.19
Han® C module	06.21
Han® CC Protected module	06.23
Han® CD module	06.25
Han E® module	06.28
Han® E Screw module	06.31
Han E® Protected module	06.33
Han® EE module	06.36
Han® EEE module	06.39
Han® ES module	06.41
Han® HV module	06.43
Han® HV Single module	06.46
Han DD® module	06.48
Han® DDD module	06.51
Han® High Density module	06.53
Han® D-Sub module	06.55
Han® USB module	06.58
Han® FireWire module	06.60

Contents | Page

Han® RJ45 module, female	**06.61**
Han® RJ45 module, male	**06.62**
RJ45 patch cable	**06.66**
Han® GigaBit module	**06.68**
Han® Shielded module	**06.70**
Han® MegaBit module	**06.72**
Accessories for GigaBit, Shielded and MegaBit	**06.75**
Han-Quintax® module	**06.77**
Han-Quintax® High Density module	**06.79**
Han® D Coax	**06.81**
Han® E Coax	**06.83**
Han® Multi module	**06.85**
Han® Pneumatic module	**06.89**
Han® SC module	**06.92**
Han® LC module	**06.94**
Han-Modular® Hinged frames	**06.96**
Han-Modular® Docking frames	**06.101**
Han-Modular® Compact	**06.105**
Han-Modular® Twin	**06.109**
Han-Modular® ECO	**06.112**
Accessories	**06.117**

Description of the Han-Modular® system

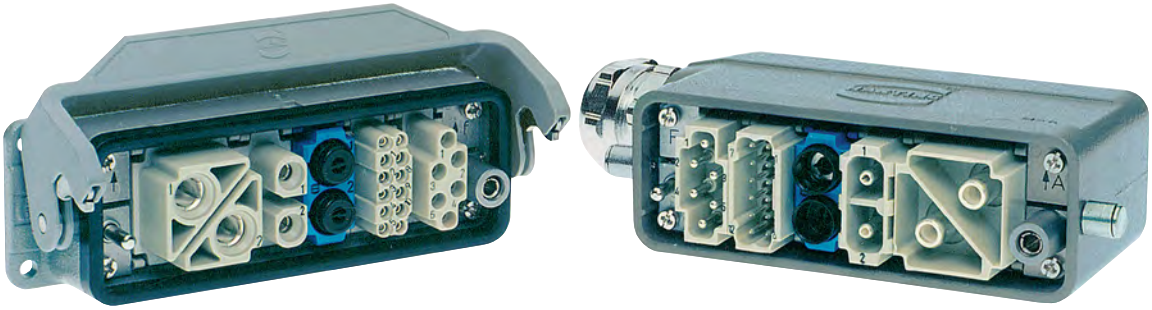

The Han-Modular® series is designed for combining different transmission media in one connector. The multifaceted system of inserts, contacts, frames, hoods and housings fulfils individual customer requirements. To continuously enable new configurations, the Han-Modular® series growths constantly.

More than 50 different modules for different transmission media are available. These cover various termination techniques. The patented Han-Modular® hinged frame enables the configuration of all modules in the well-accepted Han® hoods and housings size 6B-48B. Further additional solutions are available, e.g. suitable docking frames for drawer units.

Individual customer requirements can be realized. Combining various transmission media in one single connector results in lower expenditures in installation time and production downtime. Space savings and cost savings are further benefits. The easy extension possibilities secure a future safe design.

Product features at a glance

- ❑ Flexible solutions according to specific customer requirements
- ❑ Reduction of installation time and production downtimes
- ❑ Space savings
- ❑ Cost savings
- ❑ Future safe design, easy extension

Assembly details

Summary

Series	Han® 200 A Axial module	Han® 200 A Crimp module	Han® 100 A Axial module	Han® 100 A Crimp module
Number of contacts	1	1	2	2
Modules	Axial screw terminal	Crimp terminal	Axial screw terminal	Crimp terminal
Rated current	200 A	200 A	100 A	100 A
Rated voltage	1000 V	1000 V	1000 V	1000 V
Wire gauge	25 … 70 mm²	25 … 70 mm²	10 … 38 mm²	10 … 35 mm²

Han-Modular

Series	Han® 100 A Single module	Han® 70 A Axial module	Han® 70 A Crimp module	Han® 70 A Hybrid module
Number of contacts	1	2	2	1 / 4
Modules	Axial screw terminal	Axial screw terminal	Crimp terminal	Axial screw terminal
Rated current	100 A	70 A	70 A	70 A / 16 A
Rated voltage	830 V	1000 V	1000 V	1000 V / 400 V
Wire gauge	10 … 35 mm²	6 … 22 mm²	10 … 25 mm²	6 … 22 mm² / 0.14 … 4 mm²

Series	Han® 40 A Axial module	Han® 40 A Crimp module	Han® C Axial module	Han® C module
Number of contacts	2	2	3	3
Modules	Axial screw terminal	Crimp terminal	Axial screw terminal	Crimp terminal
Rated current	40 A	40 A	40 A	40 A
Rated voltage	1000 V	1000 V	690 V	690 V
Wire gauge	2.5 … 10 mm²	1.5 … 10 mm²	2.5 … 10 mm²	1.5 … 10 mm²

Series	Han® CC Protected module	Han® CD module	Han® E Quick Lock module	Han E® module
Number of contacts	4	3 / 4	6	6
Modules	Crimp terminal	Crimp terminal	Quick Lock terminal	Crimp terminal
Rated current	40 A	40 A / 10 A	16 A	16 A
Rated voltage	830 V	830 V / 830 V	500 V	500 V
Wire gauge	1.5 … 6 mm²	1.5 … 6 mm² / 0.14 … 2.5 mm²	0.5 … 2.5 mm²	0.14 … 4 mm²

Summary

Series	Han E® Screw module	Han E® Protected module	Han® EE Quick Lock module	Han® EE module
Number of contacts	5	6	8	8
Modules	Screw terminal	Crimp terminal	Quick Lock terminal	Crimp terminal
Rated current	16 A	16 A	16 A	16 A
Rated voltage	230 / 400 V	830 V	400 V	400 V
Wire gauge	0.5 … 2.5 mm²	0.14 … 4 mm²	0.5 … 2.5 mm²	0.14 … 4 mm²

Series	Han® EEE module	Han® ES module	Han® HV Single module	Han® HV module
Number of contacts	20	5	2	2
Modules	Crimp terminal	Cage-clamp terminal	Crimp terminal	Crimp terminal
Rated current	16 A	16 A	16 A	16 A
Rated voltage	500 V	400 V	2500 V	2900 / 5000 V
Wire gauge	0.14 … 4 mm²	0.14 … 2.5 mm²	0.5 … 4 mm²	0.5 … 4 mm²

Series	Han® HV module	Han DD® Quick Lock module	Han DD® module	Han® DDD module
Number of contacts	2	12	12	17
Modules	Crimp terminal	Quick Lock terminal	Crimp terminal	Crimp terminal
		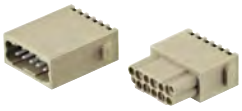		
Rated current	40 A	10 A	10 A	10 A
Rated voltage	2900 / 5000 V	250 V	250 V	160 V
Wire gauge	1.5 … 10 mm²	0.25 … 1.5 mm²	0.14 … 2.5 mm²	0.14 … 2.5 mm²

Series	Han® High Density module	Han® D-Sub module	Han® USB module	Han® FireWire module
Number of contacts	25	9	4	6
Modules	Crimp terminal	Crimp terminal	USB 2.0	IEEE 1394
Rated current	4 A	5 A		
Rated voltage	50 V	50 V		
Wire gauge	0.08 … 0.52 mm²	0.08 … 0.52 mm²		

Summary

Series	Han® RJ45 module	Han® GigaBit module	Han® MegaBit module	Han® Shielded module
Number of contacts	8	8	2 x 4	20
Modules	Ethernet Cat. 6	Ethernet Cat. 6_A	Ethernet Cat. 5e	Crimp terminal

Han-Modular

Series	Han-Quintax® module			
Number of contacts	2			
Modules				
Contacts	Han-Quintax® contact 4 + shielding 	High Density Quintax contact 8 + shielding 	Han D® Coax contact 1 + shielding 75 Ω	Han E® Coax contact 1 + shielding 50 Ω

Series	Han® Multi module			
Number of contacts	4		12	
Modules				
Contacts	FOC contacts Multimode F.O. HCS®* / PCF F.O. 1 mm POF	Coaxial contacts 50 Ω RG 174 75 Ω RG 179 50 Ω RG 58	FOC contacts Multimode F.O. HCS®* / PCF F.O. 1 mm POF	Coaxial contacts 50 Ω RG 174 75 Ω RG 179

Series	Han® Pneumatic module		Han® SC module	Han® LC module	
Number of contacts	2	3	4	6	
Modules		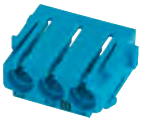			
Contacts	 Ø 6.0 mm	 Ø 1.6 mm Ø 3.0 mm Ø 4.0 mm	SC contact for GI 50; 62.5 / 125 µm 	LC Contact for LWL Multi Mode LC Contact for LWL Single Mode 	

* HCS® = Hard Clad Silica (is registered trade mark of the SpecTran Corporation)

Features

- Crimp- and Axial module are compatible modules
- Contacts can be unlocked from the mating side
- Power module for big wire cross sections up to 70mm²
- Suitable as a 3 + PE connector in a Han® 32 B housing

Derating

Current carrying capacity

The current carrying capacity of the connectors is limited by the thermal load capability of the contact element material including the connections and the insulating parts. The derating curve is therefore valid for currents which flow constantly (non-intermittent) through each contact element of the connector evenly, without exceeding the allowed maximum temperature.

Measuring and testing techniques acc. to IEC 60512-5-2

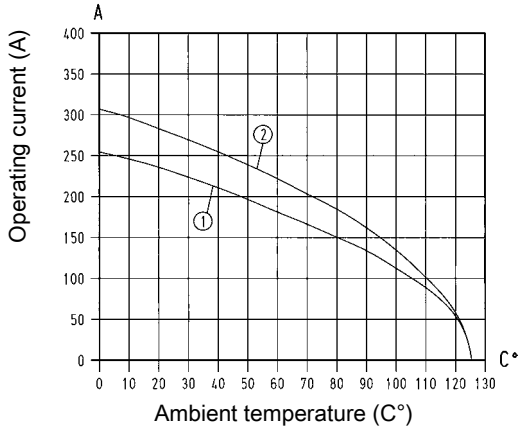

① 24 B hoods/housings with 3 modules Wire cross section 50 mm²
② 24 B hoods/housings with 3 modules Wire cross section 70 mm²

Technical characteristics

Contacts	1
Electrical data acc. to IEC 61984	**200 A 1000 V 8 kV 3**
Rated current	200 A
Rated voltage	1000 V
Rated impulse voltage	8 kV
Pollution degree	3
Rated voltage acc. to UL	600 V
Insulation resistance	≥10^{10} Ohm
Limiting temperatures	-40 °C ... 125 °C
Flammability (insert) acc. to UL 94	V 0
Mating cycles	≥500
Material (insert)	polycarbonate
Colour (insert)	RAL 7032 (light grey)
Material (contact)	copper alloy
Hex key	SW 5

Specifications and approvals

EN 50124-1
IEC 60664-1
IEC 61984

Details

Crimping tools see chapter 90

Remarks on the crimp technique

The wire gauges mentioned in the catalogue refer to geometric wire gauges of cables.

Han® 200 A module

Number of contacts

1

1000 V
200 A

Identification	Wire cross section (mm²)	Part number male	Part number female	Drawing Dimensions in mm
Han-Modular®, Han® 200 A Crimp module, Crimp terminal Please order crimp contacts separately.		09 14 001 3001	09 14 001 3101	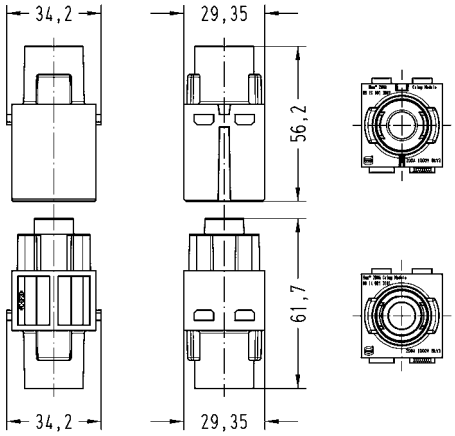 Removal tool 09 99 000 0820 see chapter 90
Han-Modular®, Han® 200 A Axial module, Axial screw terminal, silver plated contacts, contact resistance ca.0.2 mOhm 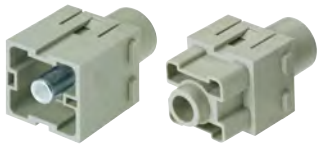	25 – 40 40 – 70	09 14 001 2663 09 14 001 2662	09 14 001 2763 09 14 001 2762	M F 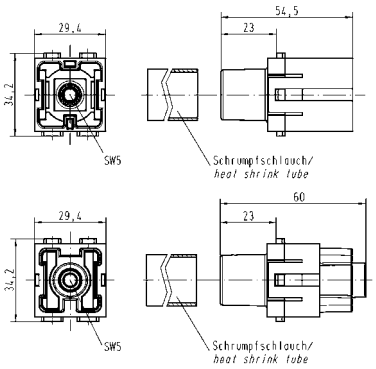 Hex key with grip 09 99 000 0364 adapter 3/8” 09 99 000 0371 see chapter 90 Stripping length 16 mm

Han® 200 A module

Identification	Wire cross section (mm²)	Part number male	Part number female	Drawing Dimensions in mm
Han-Modular®, Han® 200 A PE module, Axial screw terminal, silver plated contacts, contact resistance ca.0.2 mOhm 	25 – 40 40 – 70	09 14 001 2668 09 14 001 2667	09 14 001 2768 09 14 001 2767	M 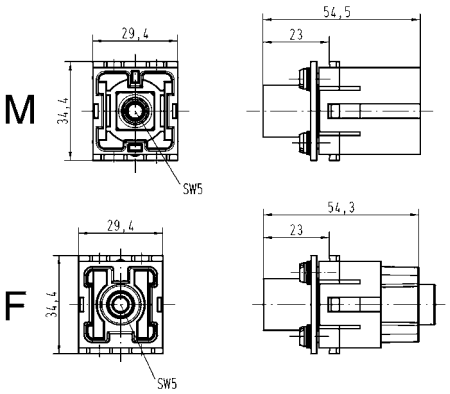 Hex key with grip 09 99 000 0364 adapter 3/8” 09 99 000 0371 see chapter 90 Stripping length 16 mm
Crimp contact, TC 200, silver plated contacts, ... 14 mm contact resistance ≤0.3 mOhm 	25 35 50 70	09 11 000 6120 09 11 000 6121 09 11 000 6122 09 11 000 6123	09 11 000 6220 09 11 000 6221 09 11 000 6222 09 11 000 6223	

Wire gauge	∅	Stripping length A
25 mm²	7	19 mm
35 mm²	8.2	20 mm
50 mm²	10	22.5 mm
70 mm²	11.5	22.5 mm
for stranded wire according to IEC 60 228 Class 5		

Features

- Crimp- and Axial module are compatible modules
- Contacts can be unlocked from the mating side

Derating

Current carrying capacity

The current carrying capacity of the connectors is limited by the thermal load capability of the contact element material including the connections and the insulating parts. The derating curve is therefore valid for currents which flow constantly (non-intermittent) through each contact element of the connector evenly, without exceeding the allowed maximum temperature.

Measuring and testing techniques acc. to IEC 60512-5-2

Crimp terminal

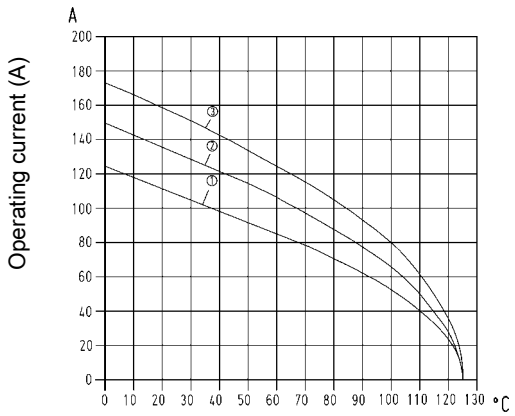

Ambient temperature (C°)

① 24 B hoods/housings with 3 modules Wire cross section 16 mm²
② 24 B hoods/housings with 3 modules Wire cross section 25 mm²
③ 24 B hoods/housings with 3 modules Wire cross section 35 mm²

Derating

Axial screw termination

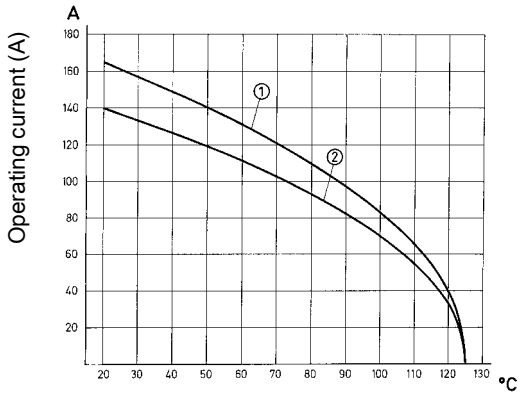

Ambient temperature (C°)

① 24 B hoods/housings with 3 modules Wire cross section 35 mm²
② 24 B hoods/housings with 3 modules Wire cross section 25 mm²

Technical characteristics

Contacts	2
Electrical data acc. to IEC 61984	**100 A 1000 V 8 kV 3**
Rated current	100 A
Rated voltage	1000 V
Rated impulse voltage	8 kV
Pollution degree	3
Rated voltage acc. to UL	600 V
Insulation resistance	≥10^{10} Ohm
Limiting temperatures	-40 °C ... 125 °C
Flammability (insert) acc. to UL 94	V 0
Mating cycles	≥500
Material (insert)	polycarbonate
Colour (insert)	RAL 7032 (light grey)
Material (contact)	copper alloy
Hex key	SW 4

Specifications and approvals

IEC 60664-1
IEC 61984

Details

Crimping tools see chapter 90

Remarks on the crimp technique

The wire gauges mentioned in the catalogue refer to geometric wire gauges of cables.

Han® 100 A module

Number of contacts

2

1000 V
100 A

Identification	Wire cross section (mm²)	Part number male	Part number female	Drawing Dimensions in mm
Han-Modular®, Han® 100 A Crimp module, Crimp terminal, silver plated contacts Please order crimp contacts separately.		09 14 002 3051	09 14 002 3151	M 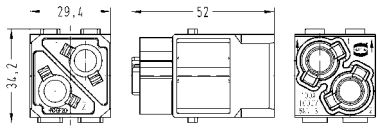 F 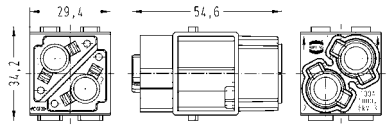
Han-Modular®, Han® 200 A Crimp module, Axial screw terminal, silver plated contacts, contact resistance ≤0.3 mOhm 	10 – 25 16 – 35 38	09 14 002 2653 09 14 002 2651 09 14 002 2650	09 14 002 2753 09 14 002 2751 09 14 002 2750	M 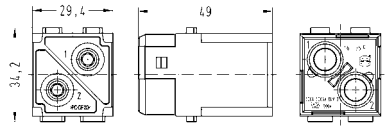 F 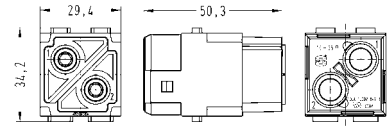
Crimp contact, TC 100, silver plated contacts, contact resistance ≤0.3 mOhm 	10 16 25 35	09 11 000 6114 09 11 000 6116 09 11 000 6125 09 11 000 6135	09 11 000 6214 09 11 000 6216 09 11 000 6225 09 11 000 6235	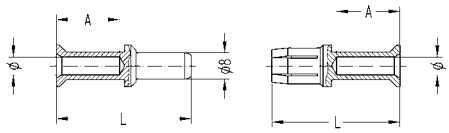

Wire gauge	∅	Stripping length A
10 mm²	4.3	19 mm
16 mm²	5.5	19 mm
25 mm²	7	19 mm
35 mm²	8.2	16 mm
for stranded wire according to IEC 60 228 Class 5		

Features

- Crimp or axial screw termination available
- Unlock of contacts with a screw driver from mating side
- Connect PE contact with special cable shoe
- Separate axial screw contacts can be terminated without any special tools directly to the wire

Technical characteristics

Contacts	1
Electrical data acc. to IEC 61984	**100 A 830 V 8 kV 3**
Rated current	100 A
Rated voltage	830 V
Rated impulse voltage	8 kV
Pollution degree	3
Rated voltage acc. to UL	600 V
Insulation resistance	≥10^{10} Ohm
Limiting temperatures	-40 °C ... 125 °C
Flammability (insert) acc. to UL 94	V 0
Mating cycles	≥500
Material (insert)	polycarbonate
Colour (insert)	RAL 7032 (light grey)
Material (contact)	copper alloy
Hex key	SW 4

Specifications and approvals

IEC 60664-1
IEC 61984

Details

Crimping tools see chapter 90

Remarks on the axial screw technique

The wire gauges mentioned in the catalogue refer to geometric wire gauges of cables.

Remarks on the crimp technique

The wire gauges mentioned in the catalogue refer to geometric wire gauges of cables.

Han® 100 A Single module

Number of contacts

1

830 V
100 A

Identification	Wire cross section (mm²)	Part number male	Part number female	Drawing Dimensions in mm
Han-Modular®, Han® 100 A Single module, contact resistance ≤0.3 mOhm Please order contacts separately.		09 14 001 3031	09 14 001 3131	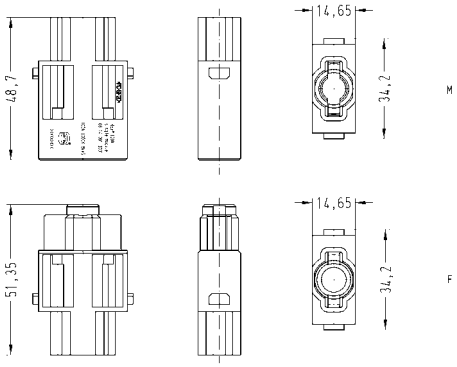
Crimp contact, TC 100, silver plated contacts, contact resistance ≤0.3 mOhm 	10 16 25 35	09 11 000 6114 09 11 000 6116 09 11 000 6125 09 11 000 6135	09 11 000 6214 09 11 000 6216 09 11 000 6225 09 11 000 6235	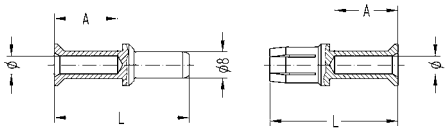
Axial screw contact, silver plated contacts, contact resistance ≤0.3 mOhm 	10 – 25 16 – 35	09 11 000 6112 09 11 000 6113	09 11 000 6212 09 11 000 6213	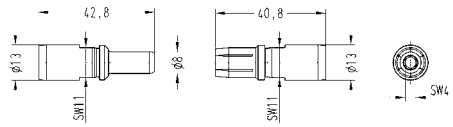 Stripping length 13 mm

Wire gauge	∅	Stripping length A
10 mm²	4.3	19 mm
16 mm²	5.5	19 mm
25 mm²	7	19 mm
35 mm²	8.2	16 mm
for stranded wire according to IEC 60 228 Class 5		

Tightening torque

mm²	10	16	25	35
Nm	6	6	7	8

Features

- For power circuits
- Male inserts with protection collar
- Polarisation of module

Derating

Current carrying capacity

The current carrying capacity of the connectors is limited by the thermal load capability of the contact element material including the connections and the insulating parts. The derating curve is therefore valid for currents which flow constantly (non-intermittent) through each contact element of the connector evenly, without exceeding the allowed maximum temperature.

Measuring and testing techniques acc. to IEC 60512-5-2

Crimp terminal

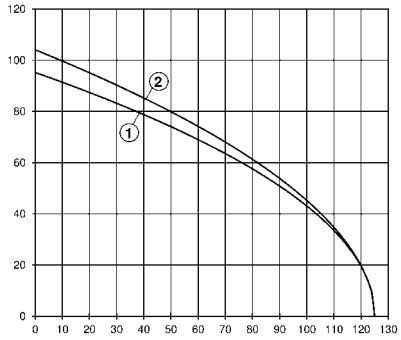

① 24 B hoods/housings with 6 modules Wire cross section 16 mm²
② 24 B hoods/housings with 6 modules Wire cross section 25 mm²

Derating

Axial screw termination

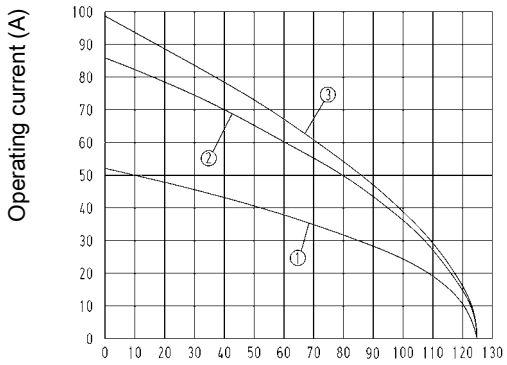

Ambient temperature (C°)

① 24 B hoods/housings with 6 modules Wire cross section 6 mm²
② 24 B hoods/housings with 6 modules Wire cross section 16 mm²
③ 24 B hoods/housings with 6 modules Wire cross section 22 mm²

Technical characteristics

Contacts	2
Electrical data acc. to IEC 61984	**70 A 1000 V 8 kV 3**
Rated current	70 A
Rated voltage	1000 V
Rated impulse voltage	8 kV
Pollution degree	3
Rated voltage acc. to UL	600 V
Insulation resistance	≥10^{10} Ohm
Limiting temperatures	-40 °C ... 125 °C
Flammability (insert) acc. to UL 94	V 0
Mating cycles	≥500
Material (insert)	polycarbonate
Colour (insert)	RAL 7032 (light grey)
Material (contact)	copper alloy
Hex key	SW 2.5

Specifications and approvals

IEC 60664-1
IEC 61984

Details

Crimping tools see chapter 90

Remarks on the crimp technique

The wire gauges mentioned in the catalogue refer to geometric wire gauges of cables.

Han® 70 A module

Number of contacts

2

1000 V
70 A

Identification	Wire cross section (mm²)	Part number male	Part number female	Drawing Dimensions in mm
Han-Modular®, Han® 70 A Crimp module, Crimp terminal 		09 14 002 3041	09 14 002 3141	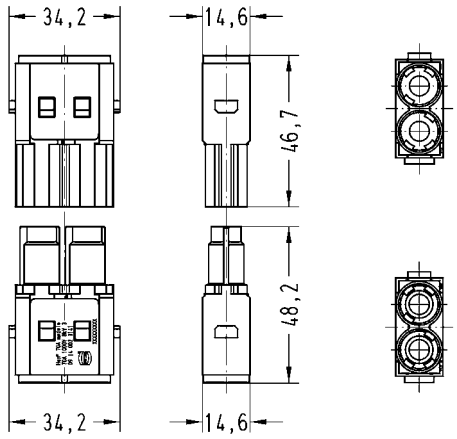
Han-Modular®, Han® 70 A Axial module, Axial screw terminal, silver plated contacts, contact resistance ≤0.5 mOhm finger safe	6 – 16 14 – 22	09 14 002 2641 09 14 002 2642		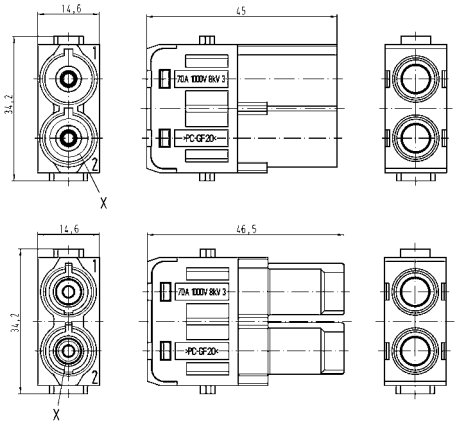

Han-Modular

Identification	Wire cross section (mm²)	Part number male	Part number female	Drawing Dimensions in mm
Han-Modular®, Han® 70 A Axial module, Axial screw terminal, silver plated contacts, contact resistance ≤0.5 mOhm 	6 – 16 14 – 22	09 14 002 2646 09 14 002 2647	09 14 002 2741 09 14 002 2742	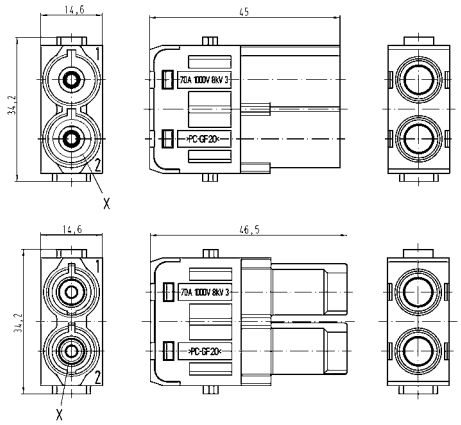
Crimp contact, TC 70, silver plated contacts, contact resistance ≤0.5 mOhm 	10 16 25	09 11 000 6131 09 11 000 6132 09 11 000 6133	09 11 000 6231 09 11 000 6232 09 11 000 6233	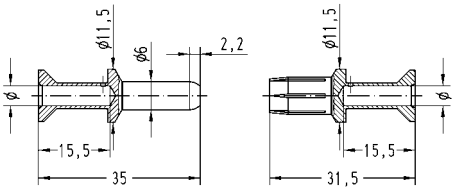

Wire gauge	∅	Stripping length A
10 mm²	4.3	15.5 mm
16 mm²	5.5	15.5 mm
25 mm²	7	15.5 mm
for stranded wire according to IEC 60 228 Class 5		

Han® 70 A Hybrid module

Features

- Axial screw termination
- For power circuits
- Male inserts with protection collar
- Polarisation of module

Technical characteristics

Contacts	1/4
Electrical data acc. to IEC 61984	**70 A 1000 V 8 kV 3**
Rated current	70 A
Rated voltage	1000 V
Rated impulse voltage	8 kV
Pollution degree	3
Electrical data, signal	**16 A 400 V 6 kV 3**
Rated current	16 A
Rated voltage	400 V
Rated impulse voltage	6 kV
Insulation resistance	≥10^{10} Ohm
Limiting temperatures	-40 °C ... 125 °C
Flammability (insert) acc. to UL 94	V 0
Mating cycles	≥500
Material (insert)	polycarbonate
Colour (insert)	RAL 7032 (light grey)
Material (contact)	copper alloy
Hex key	SW 2.5

Specifications and approvals

IEC 60664-1
IEC 61984
GL

Details

Crimping tools see chapter 90

Remarks on the axial screw technique

The wire gauges mentioned in the catalogue refer to geometric wire gauges of cables.

Remarks on the crimp technique

The wire gauges mentioned in the catalogue refer to geometric wire gauges of cables.

Number of contacts

1/4

1000 V / 400 V
70 A/16 A

Identification	Wire cross section (mm²)	Part number male	Part number female	Drawing Dimensions in mm
Han-Modular®, Han-Modular® 70 A Hybrid module, Axial screw terminal Please order signal contacts separately.	6 – 16 14 – 22	09 14 005 2646 09 14 005 2647	09 14 005 2741 09 14 005 2742	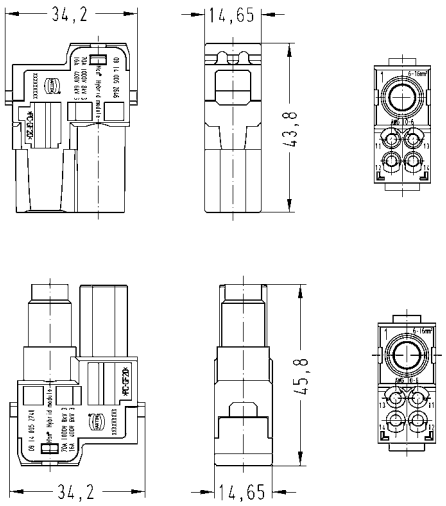
Han E®, Crimp contact, gold plated contacts, contact resistance ≤1 mOhm 	0.14 – 0.37 0.5 0.75 1 1.5 2.5 4	09 33 000 6117 09 33 000 6122 09 33 000 6115 09 33 000 6118 09 33 000 6116 09 33 000 6123 09 33 000 6119	09 33 000 6217 09 33 000 6222 09 33 000 6215 09 33 000 6218 09 33 000 6216 09 33 000 6223 09 33 000 6221	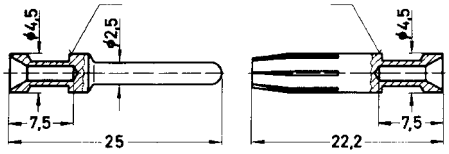 Identification / Wire gauge / Stripping length no groove / 0.14-0.37 mm² / AWG 26-22 / 7.5 mm no groove / 0.5 mm² / AWG 20 / 7.5 mm 1 groove* / 0.75 mm² / AWG 18 / 7.5 mm 1 groove / 1 mm² / AWG 18 / 7.5 mm 2 grooves / 1.5 mm² / AWG 16 / 7.5 mm 3 grooves / 2.5 mm² / AWG 14 / 7.5 mm wide groove / 3 mm² / AWG 12 / 7.5 mm no groove / 4 mm² / AWG 12 / 7.5 mm * on the back crimp collar
Han E®, Crimp contact, silver plated contacts, contact resistance ≤1 mOhm 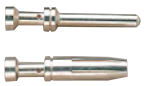	0.14 – 0.37 0.5 0.75 1 1.5 2.5 3 4	09 33 000 6127 09 33 000 6121 09 33 000 6114 09 33 000 6105 09 33 000 6104 09 33 000 6102 09 33 000 6106 09 33 000 6107	09 33 000 6227 09 33 000 6220 09 33 000 6214 09 33 000 6205 09 33 000 6204 09 33 000 6202 09 33 000 6206 09 33 000 6207	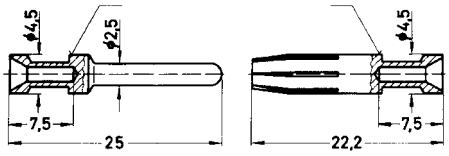 Identification / Wire gauge / Stripping length no groove / 0.14-0.37 mm² / AWG 26-22 / 7.5 mm no groove / 0.5 mm² / AWG 20 / 7.5 mm 1 groove* / 0.75 mm² / AWG 18 / 7.5 mm 1 groove / 1 mm² / AWG 18 / 7.5 mm 2 grooves / 1.5 mm² / AWG 16 / 7.5 mm 3 grooves / 2.5 mm² / AWG 14 / 7.5 mm wide groove / 3 mm² / AWG 12 / 7.5 mm no groove / 4 mm² / AWG 12 / 7.5 mm * on the back crimp collar

Features

- Crimp or axial screw termination available
- No special tools required for axial-screw termination

Derating

Current carrying capacity

The current carrying capacity of the connectors is limited by the thermal load capability of the contact element material including the connections and the insulating parts. The derating curve is therefore valid for currents which flow constantly (non-intermittent) through each contact element of the connector evenly, without exceeding the allowed maximum temperature.

Measuring and testing techniques acc. to IEC 60512-5-2

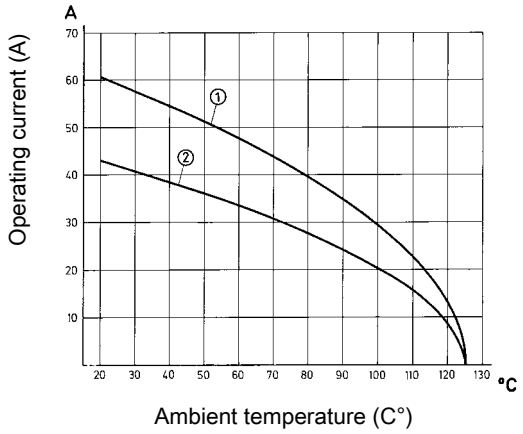

① 24 B hoods/housings with 6 modules Wire cross section 10 mm²
② 24 B hoods/housings with 6 modules Wire cross section 6 mm²

Technical characteristics

Contacts	2
Electrical data acc. to IEC 61984	**40 A 1000 V 8 kV 3**
Rated current	40 A
Rated voltage	1000 V
Rated impulse voltage	8 kV
Pollution degree	3
Rated voltage acc. to UL	600 V
Insulation resistance	≥10^{10} Ohm
Limiting temperatures	-40 °C ... 125 °C
Flammability (insert) acc. to UL 94	V 0
Mating cycles	≥500
Material (insert)	polycarbonate
Colour (insert)	RAL 7032 (light grey)
Material (contact)	copper alloy
Hex key	SW 2

Specifications and approvals

IEC 60664-1
IEC 61984

Details

Crimping tools see chapter 90

Remarks on the crimp technique

The wire gauges mentioned in the catalogue refer to geometric wire gauges of cables.

Number of contacts

2

1000 V
40 A

Identification	Wire cross section (mm²)	Part number male	Part number female	Drawing Dimensions in mm
Han-Modular®, Han® 40 A Crimp module, Crimp terminal Please order crimp contacts separately.		09 14 002 3002	09 14 002 3102	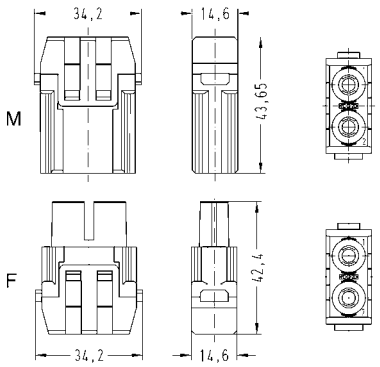 Contact arrangement (view from termination side)
Han-Modular®, Han® 40 A Axial module, Axial screw terminal, silver plated contacts, contact resistance ≤0.3 mOhm 	2.5 – 8 6 – 10	09 14 002 2601 09 14 002 2602	09 14 002 2701 09 14 002 2702	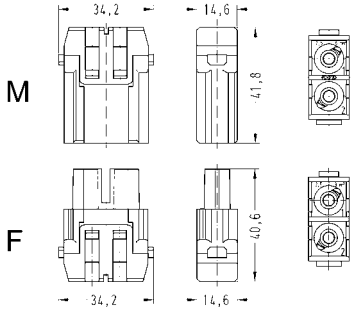 Contact arrangement (view from termination side) Stripping length mm² 2,5 4 6 10 mm 5^{+1} 5^{+1} 8^{+1} 11^{+1} Tightening torque mm² 2,5 4 6 10 Nm 1,5 1,5 2 2
Han® C, Crimp contact, silver plated contacts, contact resistance ≤1 mOhm 	1.5 2.5 4 6 10	09 32 000 6104 09 32 000 6105 09 32 000 6107 09 32 000 6108 09 32 000 6109	09 32 000 6204 09 32 000 6205 09 32 000 6207 09 32 000 6208 09 32 000 6209	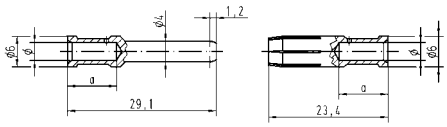 Wire gauge ⌀ Stripping length 1.5 mm² AWG 16 1.75 9.5 mm 2.5 mm² AWG 14 2.25 9.5 mm 4 mm² AWG 12 2.85 9.5 mm 6 mm² AWG 10 3.5 9.5 mm 10 mm² AWG 8 4.3 12 mm

Features

- Standard module for power up to 40 A
- No special tools required for axial-screw termination

Derating

Current carrying capacity

The current carrying capacity of the connectors is limited by the thermal load capability of the contact element material including the connections and the insulating parts. The derating curve is therefore valid for currents which flow constantly (non-intermittent) through each contact element of the connector evenly, without exceeding the allowed maximum temperature.

Measuring and testing techniques acc. to IEC 60512-5-2

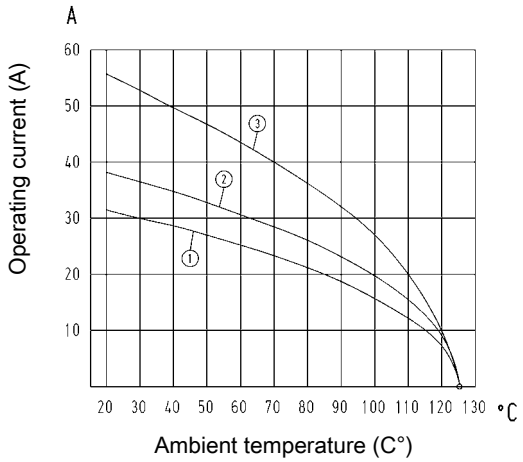

① 24 B hoods/housings with 6 modules Wire cross section 4 mm²
② 24 B hoods/housings with 6 modules Wire cross section 6 mm²
③ 24 B hoods/housings with 6 modules Wire cross section 10 mm²

Technical characteristics

Contacts	3
Electrical data acc. to IEC 61984	**40 A 690 V 8 kV 3**
Rated current	40 A
Rated voltage	690 V
Rated impulse voltage	8 kV
Pollution degree	3
Rated current acc. to UL	40 A
Rated voltage acc. to UL	600 V
Insulation resistance	≥10^{10} Ohm
Limiting temperatures	-40 °C ... 125 °C
Flammability (insert) acc. to UL 94	V 0
Mating cycles	≥500
Material (insert)	polycarbonate
Colour (insert)	RAL 7032 (light grey)
Material (contact)	copper alloy
Hex key	SW 2

Specifications and approvals

IEC 60664-1
IEC 61984

Details

Crimping tools see chapter 90

Remarks on the crimp technique

The wire gauges mentioned in the catalogue refer to geometric wire gauges of cables.

Number of contacts

3

690 V
40 A

Identification	Wire cross section (mm²)	Part number male	Part number female	Drawing Dimensions in mm
Han-Modular®, Han® C module, Crimp terminal Please order crimp contacts separately.		09 14 003 3001	09 14 003 3101	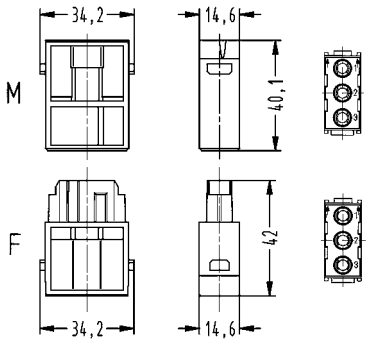 Contact arrangement (view from termination side)
Han-Modular®, Han® C module, Axial screw terminal, silver plated contacts, contact resistance ≤0.3 mOhm 	2.5 – 8 6 – 10	09 14 003 2601 09 14 003 2602	09 14 003 2701 09 14 003 2702	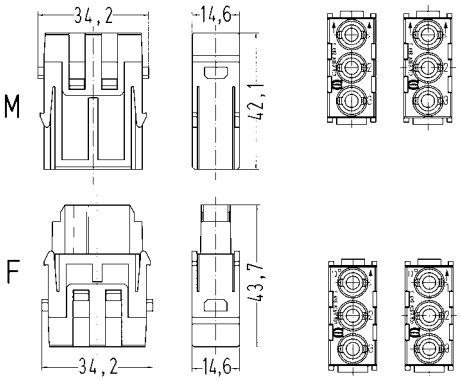 Stripping length mm² 2,5 4 6 10 mm 5^{+1} 5^{+1} 8^{+1} 11^{+1} Tightening torque mm² 2,5 4 6 10 Nm 1,5 1,5 2 2
Han® C, Crimp contact, silver plated contacts, contact resistance ≤1 mOhm 	1.5 2.5 4 6 10	09 32 000 6104 09 32 000 6105 09 32 000 6107 09 32 000 6108 09 32 000 6109	09 32 000 6204 09 32 000 6205 09 32 000 6207 09 32 000 6208 09 32 000 6209	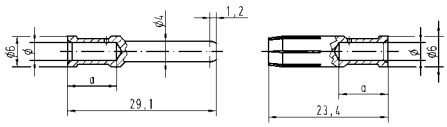 Wire gauge ⌀ Stripping length 1.5 mm² AWG 16 1.75 9.5 mm 2.5 mm² AWG 14 2.25 9.5 mm 4 mm² AWG 12 2.85 9.5 mm 6 mm² AWG 10 3.5 9.5 mm 10 mm² AWG 8 4.3 12 mm

Features

- Suitable for Han® C crimp contacts
- Designed for a high working voltage up to 830 V
- Finger safe male and female contacts
- High density of contacts

Derating

Current carrying capacity

The current carrying capacity of the connectors is limited by the thermal load capability of the contact element material including the connections and the insulating parts. The derating curve is therefore valid for currents which flow constantly (non-intermittent) through each contact element of the connector evenly, without exceeding the allowed maximum temperature.

Measuring and testing techniques acc. to IEC 60512-5-2

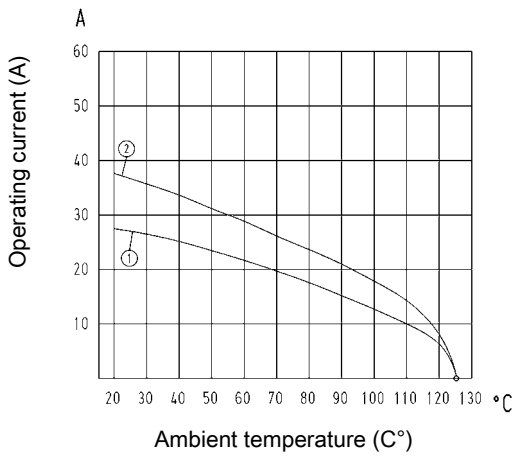

① 24 B hoods/housings with 6 modules Wire cross section 4 mm²
② 24 B hoods/housings with 6 modules Wire cross section 6 mm²

Technical characteristics

Contacts	4
Electrical data acc. to IEC 61984	**40 A 830 V 8 kV 3**
Rated current	40 A
Rated voltage	830 V
Rated impulse voltage	8 kV
Pollution degree	3
Rated voltage acc. to UL	600 V
Insulation resistance	≥10^{10} Ohm
Limiting temperatures	-40 °C ... 125 °C
Flammability (insert) acc. to UL 94	V 0
Mating cycles	≥500
Material (insert)	polycarbonate
Colour (insert)	RAL 7032 (light grey)
Material (contact)	copper alloy

Specifications and approvals

IEC 60664-1
IEC 61984

Details

Crimping tools see chapter 90

Remarks on the crimp technique

The wire gauges mentioned in the catalogue refer to geometric wire gauges of cables.

Number of contacts

4

830 V
40 A

Identification	Wire cross section (mm²)	Part number male	Part number female	Drawing Dimensions in mm
Han-Modular®, Han® CC Protected module, Crimp terminal Please order crimp contacts separately.		09 14 004 3041	09 14 004 3141	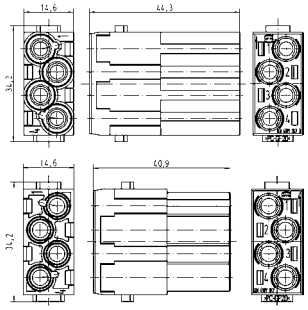
Han® C, Crimp contact, silver plated contacts, contact resistance ≤1 mOhm 	1.5 2.5 4 6	09 32 000 6104 09 32 000 6105 09 32 000 6107 09 32 000 6108	09 32 000 6204 09 32 000 6205 09 32 000 6207 09 32 000 6208	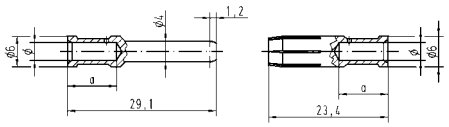 Wire gauge / ∅ / Stripping length 1.5 mm² AWG 16 / 1.75 / 9.5 mm 2.5 mm² AWG 14 / 2.25 / 9.5 mm 4 mm² AWG 12 / 2.85 / 9.5 mm 6 mm² AWG 10 / 3.5 / 9.5 mm 10 mm² AWG 8 / 4.3 / 12 mm

Features

- 3 contacts (40 A) for power circuits and 4 contacts (10 A) for signal circuits
- Ideal as motor drive connector
- Finger safe male and female contacts

Derating

Current carrying capacity

The current carrying capacity of the connectors is limited by the thermal load capability of the contact element material including the connections and the insulating parts. The derating curve is therefore valid for currents which flow constantly (non-intermittent) through each contact element of the connector evenly, without exceeding the allowed maximum temperature.

Measuring and testing techniques acc. to IEC 60512-5-2

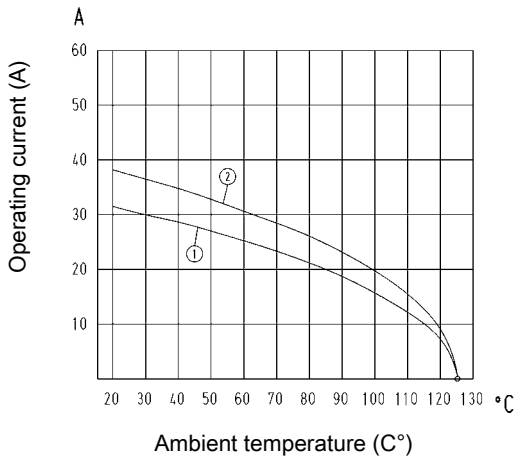

① 24 B hoods/housings with 6 modules Wire cross section 4 mm²
② 24 B hoods/housings with 6 modules Wire cross section 6 mm²

Technical characteristics

Contacts	3/4
Electrical data acc. to IEC 61984	**40 A 830 V 8 kV 3**
Rated current	40 A
Rated voltage	830 V
Rated impulse voltage	8 kV
Pollution degree	3
Electrical data, signal	**10 A 830 V 8 kV 3**
Rated current	10 A
Rated voltage	830 V
Rated impulse voltage	8 kV
Rated voltage acc. to UL	600 V
Insulation resistance	≥10^{10} Ohm
Limiting temperatures	-40 °C ... 125 °C
Flammability (insert) acc. to UL 94	V 0
Mating cycles	≥500
Material (insert)	polycarbonate
Colour (insert)	RAL 7032 (light grey)
Material (contact)	copper alloy

Specifications and approvals

IEC 60664-1
IEC 61984

Details

Crimping tools see chapter 90

Remarks on the crimp technique

The wire gauges mentioned in the catalogue refer to geometric wire gauges of cables.

Number of contacts

3/4

830 V / 830 V
40 A/10 A

Identification	Wire cross section (mm²)	Part number male	Part number female	Drawing Dimensions in mm
Han-Modular®, Han® CD module, Crimp terminal Please order crimp contacts separately.		09 14 007 3001	09 14 007 3101	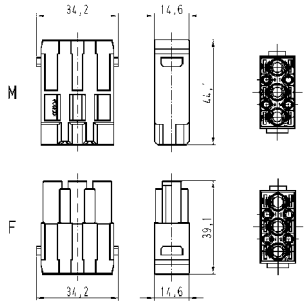 Contact arrangement (view from termination side) Max. insulation diameter 5 mm
Han D®, Crimp contact, gold plated contacts, contact resistance ≤3 mOhm 	0.14 – 0.37 0.5 0.75 1 1.5 2.5	09 15 000 6124 09 15 000 6123 09 15 000 6125 09 15 000 6122 09 15 000 6121 09 15 000 6126	09 15 000 6224 09 15 000 6223 09 15 000 6225 09 15 000 6222 09 15 000 6221 09 15 000 6226	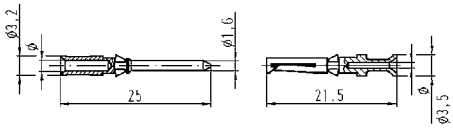 Wire gauge / ø / Stripping length 0.14-0.37 mm² AWG 26-22 / 0.9 mm / 8 mm 0.5 mm² AWG 20 / 1.1 mm / 8 mm 0.75 mm² AWG 18 / 1.3 mm / 8 mm 1 mm² AWG 18 / 1.45 mm / 8 mm 1.5 mm² AWG 16 / 1.75 mm / 8 mm 2.5 mm² AWG 14 / 2.25 mm / 6 mm
Han D®, Crimp contact, silver plated contacts, contact resistance ≤3 mOhm 	0.14 – 0.37 0.5 0.75 1 1.5 2.5	09 15 000 6104 09 15 000 6103 09 15 000 6105 09 15 000 6102 09 15 000 6101 09 15 000 6106	09 15 000 6204 09 15 000 6203 09 15 000 6205 09 15 000 6202 09 15 000 6201 09 15 000 6206	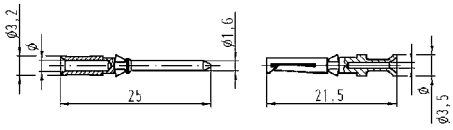 Wire gauge / ø / Stripping length 0.14-0.37 mm² AWG 26-22 / 0.9 mm / 8 mm 0.5 mm² AWG 20 / 1.1 mm / 8 mm 0.75 mm² AWG 18 / 1.3 mm / 8 mm 1 mm² AWG 18 / 1.45 mm / 8 mm 1.5 mm² AWG 16 / 1.75 mm / 8 mm 2.5 mm² AWG 14 / 2.25 mm / 6 mm

Han® CD module

Identification	Wire cross section (mm²)	Part number male	Part number female	Drawing Dimensions in mm
Han® C, Crimp contact, silver plated contacts, contact resistance ≤1 mOhm	1.5 2.5 4 6	09 32 000 6104 09 32 000 6105 09 32 000 6107 09 32 000 6108	09 32 000 6204 09 32 000 6205 09 32 000 6207 09 32 000 6208	

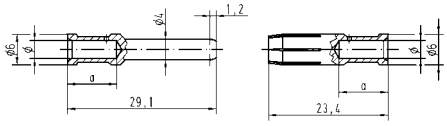

Wire gauge		⌀	Stripping length
1.5 mm²	AWG 16	1.75	9.5 mm
2.5 mm²	AWG 14	2.25	9.5 mm
4 mm²	AWG 12	2.85	9.5 mm
6 mm²	AWG 10	3.5	9.5 mm
10 mm²	AWG 8	4.3	12 mm

Features

- Standard module for power up to 16 A
- Han-Quick Lock® or Crimp terminal available

Derating

Current carrying capacity

The current carrying capacity of the connectors is limited by the thermal load capability of the contact element material including the connections and the insulating parts. The derating curve is therefore valid for currents which flow constantly (non-intermittent) through each contact element of the connector evenly, without exceeding the allowed maximum temperature.

Measuring and testing techniques acc. to IEC 60512-5-2

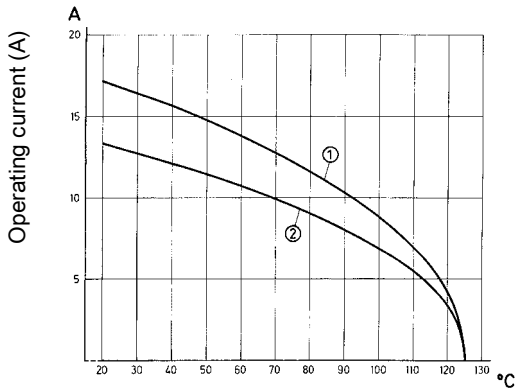

Ambient temperature (C°)

① 24 B hoods/housings with 6 modules Wire cross section 2.5 mm²
② 24 B hoods/housings with 6 modules Wire cross section 1.5 mm²

Technical characteristics

Contacts	6
Electrical data acc. to IEC 61984	**16 A 500 V 6 kV 3**
Rated current	16 A
Rated voltage	500 V
Rated impulse voltage	6 kV
Pollution degree	3
Rated voltage acc. to UL	600 V
Insulation resistance	≥10^{10} Ohm
Limiting temperatures	-40 °C ... 125 °C
Flammability (insert) acc. to UL 94	V 0
Mating cycles	≥500
Mating cycles with HMC contacts	≥10000
Material (insert)	polycarbonate
Colour (insert)	RAL 7032 (light grey)
Material (contact)	copper alloy

Specifications and approvals

IEC 60664-1
IEC 61984

Details

Crimping tools see chapter 90

Remarks on the crimp technique

The wire gauges mentioned in the catalogue refer to geometric wire gauges of cables.

Designed for 10,000 mating cycles (only with Han E® HMC crimp contacts, Han-Modular® Docking frame and Han-Modular® Hinged frame HMC)

Number of contacts

6

500 V
16 A

Identification	Wire cross section (mm²)	Part number male	Part number female	Drawing Dimensions in mm
Han-Quick Lock® Han-Modular®, Han E® module, Han-Quick Lock® termination, silver plated contacts, contact resistance ≤1 mOhm 	0.5 – 2.5	09 14 006 2633	09 14 006 2733	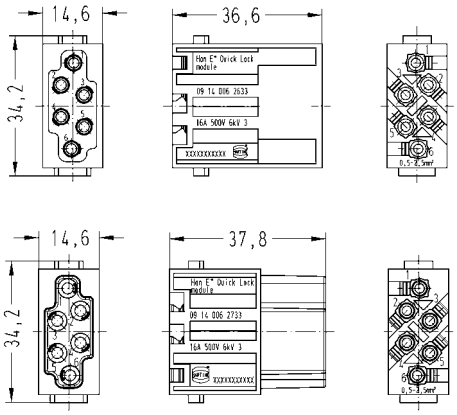 Contact arrangement (view from termination side)
Han-Modular®, Han E® module, Crimp terminal Please order crimp contacts separately.		09 14 006 3001	09 14 006 3101	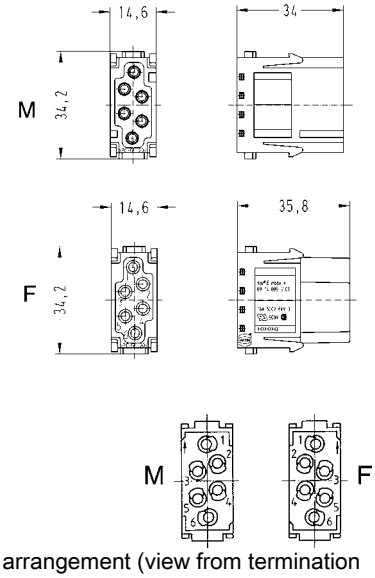 Contact arrangement (view from termination side)

Identification	Wire cross section (mm²)	Part number male	Part number female	Drawing Dimensions in mm
Han E®, Crimp contact, gold plated contacts, contact resistance ≤1 mOhm	0.14 – 0.37	09 33 000 6117	09 33 000 6217	
	0.5	09 33 000 6122	09 33 000 6222	
	0.75	09 33 000 6115	09 33 000 6215	
	1	09 33 000 6118	09 33 000 6218	
	1.5	09 33 000 6116	09 33 000 6216	
	2.5	09 33 000 6123	09 33 000 6223	
	4	09 33 000 6119	09 33 000 6221	

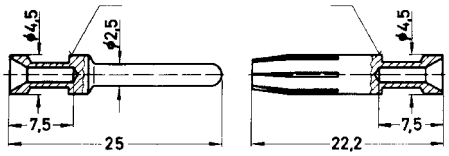

Identification	Wire gauge		Stripping length
no groove	0.14-0.37 mm²	AWG 26-22	7.5 mm
no groove	0.5 mm²	AWG 20	7.5 mm
1 groove*	0.75 mm²	AWG 18	7.5 mm
1 groove	1 mm²	AWG 18	7.5 mm
2 grooves	1.5 mm²	AWG 16	7.5 mm
3 grooves	2.5 mm²	AWG 14	7.5 mm
wide groove	3 mm²	AWG 12	7.5 mm
no groove	4 mm²	AWG 12	7.5 mm

* on the back crimp collar

Identification	Wire cross section (mm²)	Part number male	Part number female	Drawing Dimensions in mm
Han E®, Crimp contact, silver plated contacts, contact resistance ≤1 mOhm	0.14 – 0.37	09 33 000 6127	09 33 000 6227	
	0.5	09 33 000 6121	09 33 000 6220	
	0.75	09 33 000 6114	09 33 000 6214	
	1	09 33 000 6105	09 33 000 6205	
	1.5	09 33 000 6104	09 33 000 6204	
	2.5	09 33 000 6102	09 33 000 6202	
	3	09 33 000 6106	09 33 000 6206	
	4	09 33 000 6107	09 33 000 6207	

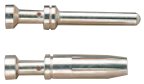

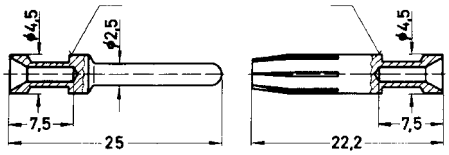

Identification	Wire gauge		Stripping length
no groove	0.14-0.37 mm²	AWG 26-22	7.5 mm
no groove	0.5 mm²	AWG 20	7.5 mm
1 groove*	0.75 mm²	AWG 18	7.5 mm
1 groove	1 mm²	AWG 18	7.5 mm
2 grooves	1.5 mm²	AWG 16	7.5 mm
3 grooves	2.5 mm²	AWG 14	7.5 mm
wide groove	3 mm²	AWG 12	7.5 mm
no groove	4 mm²	AWG 12	7.5 mm

* on the back crimp collar

Features

- Screw connection, suitable for all users around the world
- No special tools required
- For flexible and solid conductors from 0.5 to 2.5 mm²
- Additional protection against voltage and accidental contact by a sliding insulation cover which closes automatically during mating

Derating

Current carrying capacity

The current carrying capacity of the connectors is limited by the thermal load capability of the contact element material including the connections and the insulating parts. The derating curve is therefore valid for currents which flow constantly (non-intermittent) through each contact element of the connector evenly, without exceeding the allowed maximum temperature.

Measuring and testing techniques acc. to IEC 60512-5-2

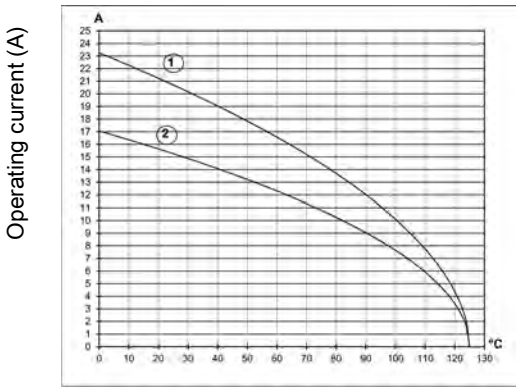

Technical characteristics

Contacts	5
Electrical data acc. to IEC 61984	**16 A 230/400 V 4 kV 3**
Rated current	16 A
Rated voltage conductor - ground	230 V
Rated voltage conductor - conductor	400 V
Rated impulse voltage	4 kV
Pollution degree	3
Insulation resistance	≥10^{10} Ohm
Limiting temperatures	-40 °C ... 125 °C
Flammability (insert) acc. to UL 94	V 0
Mating cycles	≥500
Material (insert)	polycarbonate
Colour (insert)	RAL 7032 (light grey)
Material (contact)	copper alloy

Specifications and approvals

IEC 60664-1
IEC 61984
GL

Number of contacts

5

230/400 V
16 A

Identification	Wire cross section (mm²)	Part number male	Part number female	Drawing Dimensions in mm
Han-Modular®, Han E® module, Screw terminal, silver plated contacts, contact resistance ≤1 mOhm 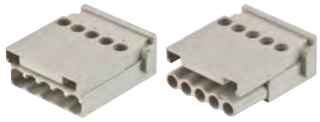	0.5 – 2.5	09 14 005 2601	09 14 005 2701	M 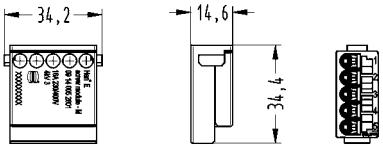 F 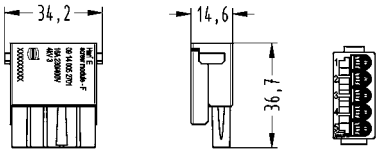

Features

- Suitable for Han E® crimp contacts
- Designed for a high working voltage up to 830 V
- Finger safe male and female contacts

Derating

Current carrying capacity

The current carrying capacity of the connectors is limited by the thermal load capability of the contact element material including the connections and the insulating parts. The derating curve is therefore valid for currents which flow constantly (non-intermittent) through each contact element of the connector evenly, without exceeding the allowed maximum temperature.

Measuring and testing techniques acc. to IEC 60512-5-2

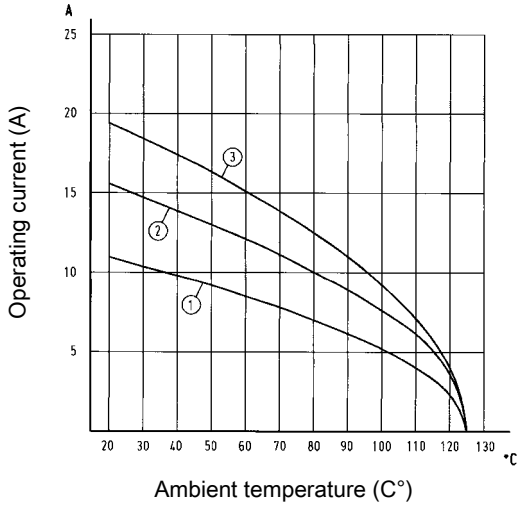

① 24 B hoods/housings with 6 modules Wire cross section 1.5 mm²
② 24 B hoods/housings with 6 modules Wire cross section 2.5 mm²
③ 24 B hoods/housings with 6 modules Wire cross section 4 mm²

Technical characteristics

Contacts	6
Electrical data acc. to IEC 61984	**16 A 830 V 8 kV 3**
Rated current	16 A
Rated voltage	830 V
Rated impulse voltage	8 kV
Pollution degree	3
Rated voltage acc. to UL	600 V
Insulation resistance	≥10^{10} Ohm
Limiting temperatures	-40 °C ... 125 °C
Flammability (insert) acc. to UL 94	V 0
Mating cycles	≥500
Mating cycles with HMC contacts	≥10000
Material (insert)	polycarbonate
Colour (insert)	RAL 7032 (light grey)
Material (contact)	copper alloy

Specifications and approvals

IEC 60664-1
IEC 61984

Details

Crimping tools see chapter 90

Remarks on the crimp technique

The wire gauges mentioned in the catalogue refer to geometric wire gauges of cables.

Designed for 10,000 mating cycles (only with Han E® HMC crimp contacts, Han-Modular® Docking frame and Han-Modular® Hinged frame HMC)

Number of contacts

6

830 V
16 A

Identification	Wire cross section (mm²)	Part number male	Part number female	Drawing Dimensions in mm
Han-Modular®, Han E® Protected module, Crimp terminal Please order crimp contacts separately.		09 14 006 3041	09 14 006 3141	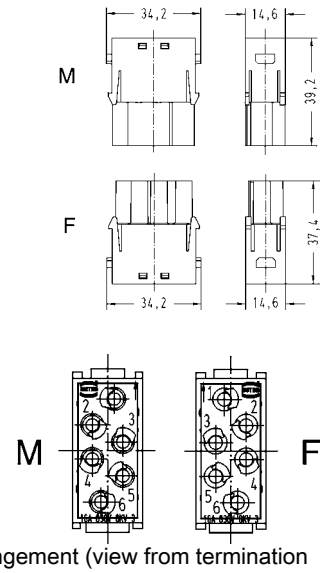 Contact arrangement (view from termination side)
Han E®, Crimp contact, gold plated contacts, contact resistance ≤1 mOhm 	0.14 – 0.37 0.5 0.75 1 1.5 2.5 4	09 33 000 6117 09 33 000 6122 09 33 000 6115 09 33 000 6118 09 33 000 6116 09 33 000 6123 09 33 000 6119	09 33 000 6217 09 33 000 6222 09 33 000 6215 09 33 000 6218 09 33 000 6216 09 33 000 6223 09 33 000 6221	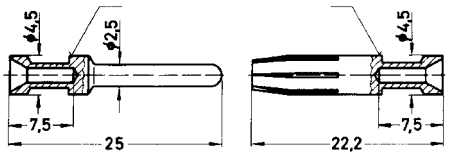

Identification	Wire gauge		Stripping length
no groove	0.14-0.37 mm²	AWG 26-22	7.5 mm
no groove	0.5 mm²	AWG 20	7.5 mm
1 groove*	0.75 mm²	AWG 18	7.5 mm
1 groove	1 mm²	AWG 18	7.5 mm
2 grooves	1.5 mm²	AWG 16	7.5 mm
3 grooves	2.5 mm²	AWG 14	7.5 mm
wide groove	3 mm²	AWG 12	7.5 mm
no groove	4 mm²	AWG 12	7.5 mm

* on the back crimp collar

Han E® Protected module

Identification	Wire cross section (mm²)	Part number male	Part number female	Drawing Dimensions in mm
Han E®, Crimp contact, silver plated contacts, contact resistance ≤1 mOhm	0.14 – 0.37	09 33 000 6127	09 33 000 6227	
	0.5	09 33 000 6121	09 33 000 6220	
	0.75	09 33 000 6114	09 33 000 6214	
	1	09 33 000 6105	09 33 000 6205	
	1.5	09 33 000 6104	09 33 000 6204	
	2.5	09 33 000 6102	09 33 000 6202	
	3	09 33 000 6106	09 33 000 6206	
	4	09 33 000 6107	09 33 000 6207	

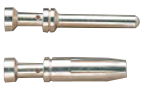

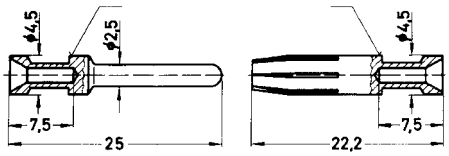

Identification	Wire gauge		Stripping length
no groove	0.14-0.37 mm²	AWG 26-22	7.5 mm
no groove	0.5 mm²	AWG 20	7.5 mm
1 groove*	0.75 mm²	AWG 18	7.5 mm
1 groove	1 mm²	AWG 18	7.5 mm
2 grooves	1.5 mm²	AWG 16	7.5 mm
3 grooves	2.5 mm²	AWG 14	7.5 mm
wide groove	3 mm²	AWG 12	7.5 mm
no groove	4 mm²	AWG 12	7.5 mm

* on the back crimp collar

Features

- Han-Quick Lock® or Crimp terminal available
- High contact density

Derating

Current carrying capacity

The current carrying capacity of the connectors is limited by the thermal load capability of the contact element material including the connections and the insulating parts. The derating curve is therefore valid for currents which flow constantly (non-intermittent) through each contact element of the connector evenly, without exceeding the allowed maximum temperature.

Measuring and testing techniques acc. to IEC 60512-5-2

Quick Lock termination

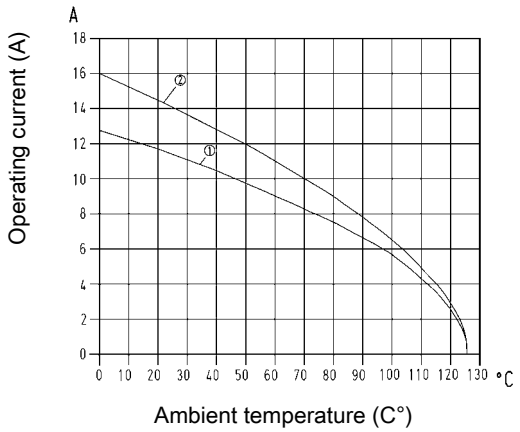

① 24 B hoods/housings with 6 modules Wire cross section 1.5 mm²
② 24 B hoods/housings with 6 modules Wire cross section 2.5 mm²

Crimp terminal

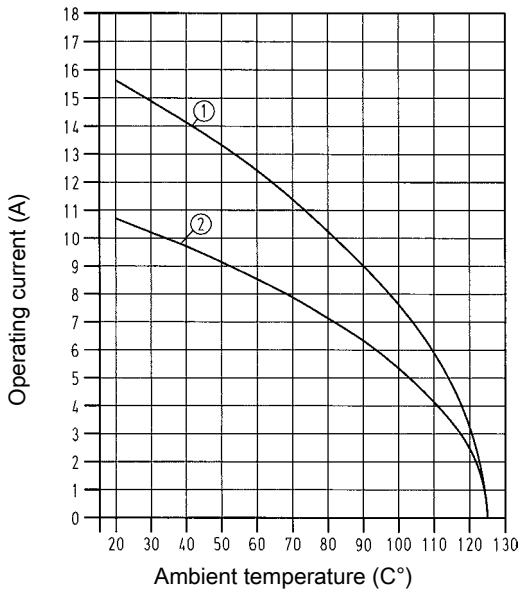

① 24 B hoods/housings with 6 modules Wire cross section 2.5 mm²
② 24 B hoods/housings with 6 modules Wire cross section 1.5 mm²

Technical characteristics

Contacts	8
Electrical data acc. to IEC 61984	**blue slide** **16 A 400 V 6 kV 3** **black slide** **16 A 400 V 6 kV 3** **16 A 400 V 6 kV 3**
Rated current	16 A
Rated voltage	400 V
Rated impulse voltage	6 kV
Pollution degree	3
Rated voltage acc. to UL	600 V
Insulation resistance	≥10^{10} Ohm
Limiting temperatures	-40 °C ... 125 °C
Flammability (insert) acc. to UL 94	V 0
Mating cycles	≥500
Mating cycles with HMC contacts	≥10000
Material (insert)	polycarbonate
Colour (insert)	RAL 7032 (light grey)
Material (contact)	copper alloy

Specifications and approvals

IEC 60664-1
IEC 61984

Details

Crimping tools see chapter 90

Remarks on the crimp technique

The wire gauges mentioned in the catalogue refer to geometric wire gauges of cables.

Designed for 10,000 mating cycles (only with Han E® HMC crimp contacts, Han-Modular® Docking frame and Han-Modular® Hinged frame HMC)

Number of contacts

8

400 V
16 A

Identification	Wire cross section (mm²)	Part number male	Part number female	Drawing Dimensions in mm
Han-Quick Lock® Han-Modular®, Han® EE module, Han-Quick Lock® termination, blue slide, silver plated contacts, contact resistance ≤1 mOhm 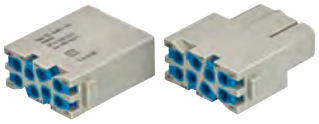	0.5 – 2.5	09 14 008 2633	09 14 008 2733	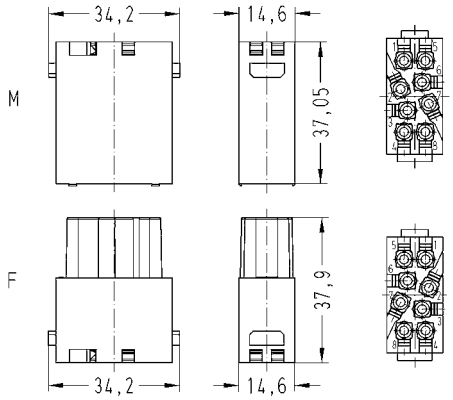 Contact arrangement (view from termination side)
Han-Quick Lock® Han® EE module, Han-Quick Lock® termination, black slide, silver plated contacts, contact resistance ≤1 mOhm	0.25 – 1.5	09 14 008 2634	09 14 008 2734	
Han-Modular®, Han® EE module, Crimp terminal Please order crimp contacts separately.		09 14 008 3001	09 14 008 3101	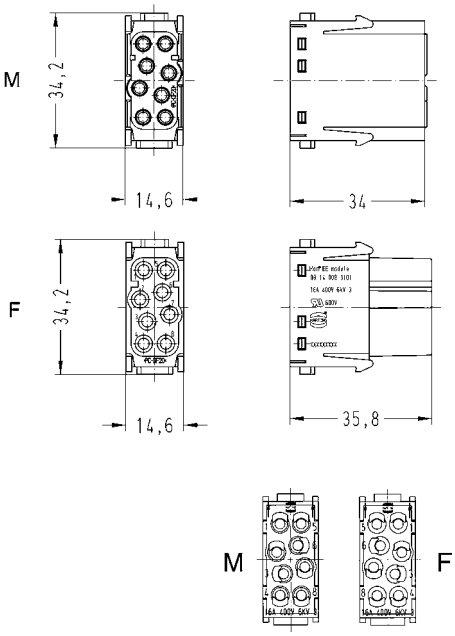 Contact arrangement (view from termination side)

Han-Modular

Identification	Wire cross section (mm²)	Part number male	Part number female	Drawing Dimensions in mm
Han E®, Crimp contact, gold plated contacts, contact resistance ≤1 mOhm	0.14 – 0.37	09 33 000 6117	09 33 000 6217	
	0.5	09 33 000 6122	09 33 000 6222	
	0.75	09 33 000 6115	09 33 000 6215	
	1	09 33 000 6118	09 33 000 6218	
	1.5	09 33 000 6116	09 33 000 6216	
	2.5	09 33 000 6123	09 33 000 6223	
	4	09 33 000 6119	09 33 000 6221	

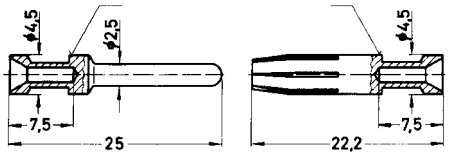

Identification	Wire gauge		Stripping length
no groove	0.14-0.37 mm²	AWG 26-22	7.5 mm
no groove	0.5 mm²	AWG 20	7.5 mm
1 groove*	0.75 mm²	AWG 18	7.5 mm
1 groove	1 mm²	AWG 18	7.5 mm
2 grooves	1.5 mm²	AWG 16	7.5 mm
3 grooves	2.5 mm²	AWG 14	7.5 mm
wide groove	3 mm²	AWG 12	7.5 mm
no groove	4 mm²	AWG 12	7.5 mm

* on the back crimp collar

Identification	Wire cross section (mm²)	Part number male	Part number female	Drawing Dimensions in mm
Han E®, Crimp contact, silver plated contacts, contact resistance ≤1 mOhm	0.14 – 0.37	09 33 000 6127	09 33 000 6227	
	0.5	09 33 000 6121	09 33 000 6220	
	0.75	09 33 000 6114	09 33 000 6214	
	1	09 33 000 6105	09 33 000 6205	
	1.5	09 33 000 6104	09 33 000 6204	
	2.5	09 33 000 6102	09 33 000 6202	
	3	09 33 000 6106	09 33 000 6206	
	4	09 33 000 6107	09 33 000 6207	

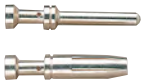

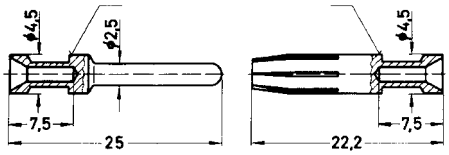

Identification	Wire gauge		Stripping length
no groove	0.14-0.37 mm²	AWG 26-22	7.5 mm
no groove	0.5 mm²	AWG 20	7.5 mm
1 groove*	0.75 mm²	AWG 18	7.5 mm
1 groove	1 mm²	AWG 18	7.5 mm
2 grooves	1.5 mm²	AWG 16	7.5 mm
3 grooves	2.5 mm²	AWG 14	7.5 mm
wide groove	3 mm²	AWG 12	7.5 mm
no groove	4 mm²	AWG 12	7.5 mm

* on the back crimp collar

Features

- Suitable for Han E® crimp contacts
- Higher density of crimping contacts
- Standard module for power up to 16 A
- Also suitable as a reliable signal connector

Derating

Current carrying capacity

The current carrying capacity of the connectors is limited by the thermal load capability of the contact element material including the connections and the insulating parts. The derating curve is therefore valid for currents which flow constantly (non-intermittent) through each contact element of the connector evenly, without exceeding the allowed maximum temperature.

Measuring and testing techniques acc. to IEC 60512-5-2

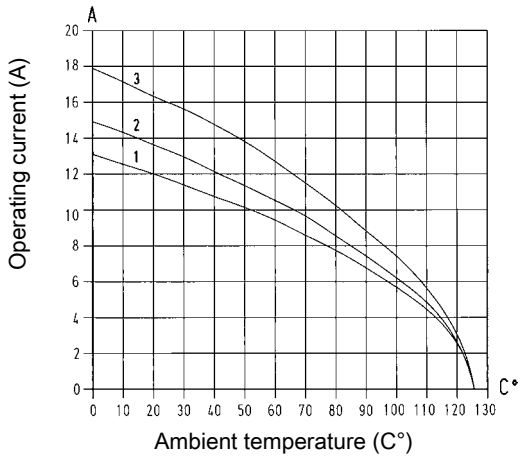

① 24 B hoods/housings with 3 modules Wire cross section 1.5 mm²
② 24 B hoods/housings with 3 modules Wire cross section 2.5 mm²
③ 24 B hoods/housings with 3 modules Wire cross section 4 mm²

Technical characteristics

Contacts	20
Electrical data acc. to IEC 61984	**16 A 500 V 6 kV 3**
Rated current	16 A
Rated voltage	500 V
Rated impulse voltage	6 kV
Pollution degree	3
Rated voltage acc. to UL	600 V
Insulation resistance	≥10^{10} Ohm
Limiting temperatures	-40 °C ... 125 °C
Flammability (insert) acc. to UL 94	V 0
Mating cycles	≥500
Mating cycles with HMC contacts	≥10000
Material (insert)	polycarbonate
Colour (insert)	RAL 7032 (light grey)
Material (contact)	copper alloy

Specifications and approvals

IEC 60664-1
IEC 61984

Details

Crimping tools see chapter 90

Remarks on the crimp technique

The wire gauges mentioned in the catalogue refer to geometric wire gauges of cables.

Designed for 10,000 mating cycles (only with Han E® HMC crimp contacts, Han-Modular® Docking frame and Han-Modular® Hinged frame HMC)

Number of contacts

20

500 V
16 A

Identification	Wire cross section (mm²)	Part number male	Part number female	Drawing Dimensions in mm
Han-Modular®, Han® EEE module, Crimp terminal Please order crimp contacts separately.		09 14 020 3001	09 14 020 3101	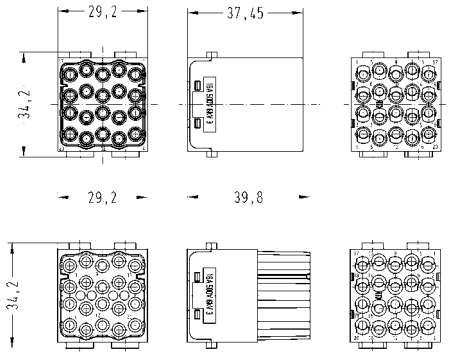 Contact arrangement (view from termination side)
Han E®, Crimp contact, gold plated contacts, contact resistance ≤1 mOhm 	0.14 – 0.37 0.5 0.75 1 1.5 2.5 4	09 33 000 6117 09 33 000 6122 09 33 000 6115 09 33 000 6118 09 33 000 6116 09 33 000 6123 09 33 000 6119	09 33 000 6217 09 33 000 6222 09 33 000 6215 09 33 000 6218 09 33 000 6216 09 33 000 6223 09 33 000 6221	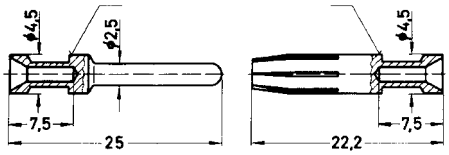 Identification / Wire gauge / Stripping length no groove — 0.14-0.37 mm² — AWG 26-22 — 7.5 mm no groove — 0.5 mm² — AWG 20 — 7.5 mm 1 groove* — 0.75 mm² — AWG 18 — 7.5 mm 1 groove — 1 mm² — AWG 18 — 7.5 mm 2 grooves — 1.5 mm² — AWG 16 — 7.5 mm 3 grooves — 2.5 mm² — AWG 14 — 7.5 mm wide groove — 3 mm² — AWG 12 — 7.5 mm no groove — 4 mm² — AWG 12 — 7.5 mm * on the back crimp collar
Han E®, Crimp contact, silver plated contacts, contact resistance ≤1 mOhm 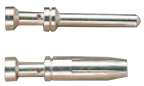	0.14 – 0.37 0.5 0.75 1 1.5 2.5 3 4	09 33 000 6127 09 33 000 6121 09 33 000 6114 09 33 000 6105 09 33 000 6104 09 33 000 6102 09 33 000 6106 09 33 000 6107	09 33 000 6227 09 33 000 6220 09 33 000 6214 09 33 000 6205 09 33 000 6204 09 33 000 6202 09 33 000 6206 09 33 000 6207	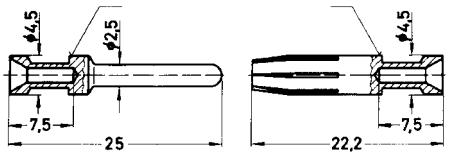 Identification / Wire gauge / Stripping length no groove — 0.14-0.37 mm² — AWG 26-22 — 7.5 mm no groove — 0.5 mm² — AWG 20 — 7.5 mm 1 groove* — 0.75 mm² — AWG 18 — 7.5 mm 1 groove — 1 mm² — AWG 18 — 7.5 mm 2 grooves — 1.5 mm² — AWG 16 — 7.5 mm 3 grooves — 2.5 mm² — AWG 14 — 7.5 mm wide groove — 3 mm² — AWG 12 — 7.5 mm no groove — 4 mm² — AWG 12 — 7.5 mm * on the back crimp collar

Features

- Reliable cage clamp termination
- No special tools required

Derating

Current carrying capacity

The current carrying capacity of the connectors is limited by the thermal load capability of the contact element material including the connections and the insulating parts. The derating curve is therefore valid for currents which flow constantly (non-intermittent) through each contact element of the connector evenly, without exceeding the allowed maximum temperature.

Measuring and testing techniques acc. to IEC 60512-5-2

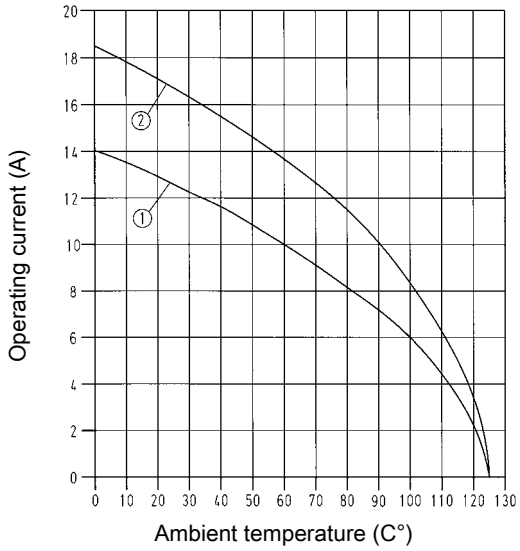

① 24 B hoods/housings with 6 modules Wire cross section 1.5 mm²
② 24 B hoods/housings with 6 modules Wire cross section 2.5 mm²

Technical characteristics

Contacts	5
Electrical data acc. to IEC 61984	**16 A 400 V 6 kV 3**
Rated current	16 A
Rated voltage	400 V
Rated impulse voltage	6 kV
Pollution degree	3
Rated voltage acc. to UL	600 V
Insulation resistance	≥10^{10} Ohm
Limiting temperatures	-40 °C ... 125 °C
Flammability (insert) acc. to UL 94	V 0
Mating cycles	≥500
Material (insert)	polycarbonate
Colour (insert)	RAL 7032 (light grey)
Material (contact)	copper alloy

Specifications and approvals

IEC 60664-1
IEC 61984

Number of contacts

5

400 V
16 A

Identification	Wire cross section (mm²)	Part number male	Part number female	Drawing Dimensions in mm
Han-Modular®, Han® ES module, Cage-clamp terminal, silver plated contacts, contact resistance ≤3 mOhm 	0.14 – 2.5	09 14 005 2616	09 14 005 2716	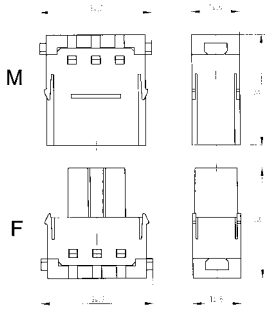
Han-Modular®, Han® ES module, Cage-clamp terminal, gold plated contacts, contact resistance ≤3 mOhm	0.14 – 2.5	09 14 005 2617	09 14 005 2717	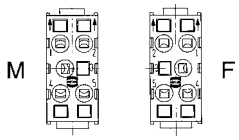 Contact arrangement (view from termination side)

Features

- Available in two versions: for Han® C or Han E® crimp contacts
- 2 contacts up to 5000 V
- Insulator out of a voltage resistant teflon material
- Combination of all other modules (pneumatic, signal etc.)

Derating

Current carrying capacity

The current carrying capacity of the connectors is limited by the thermal load capability of the contact element material including the connections and the insulating parts. The derating curve is therefore valid for currents which flow constantly (non-intermittent) through each contact element of the connector evenly, without exceeding the allowed maximum temperature.

Measuring and testing techniques acc. to IEC 60512-5-2

Han® C Crimp contacts

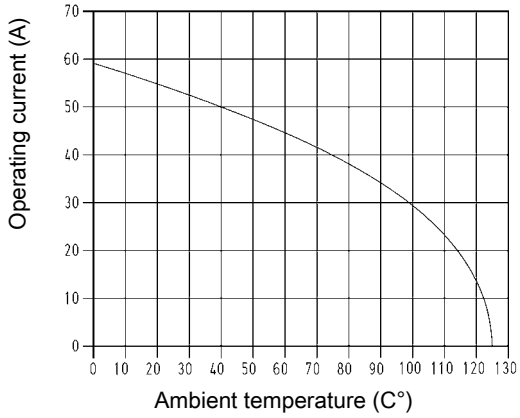

① 24 B hoods/housings with 3 modules Wire cross section 6 mm²

Han E® crimp contacts

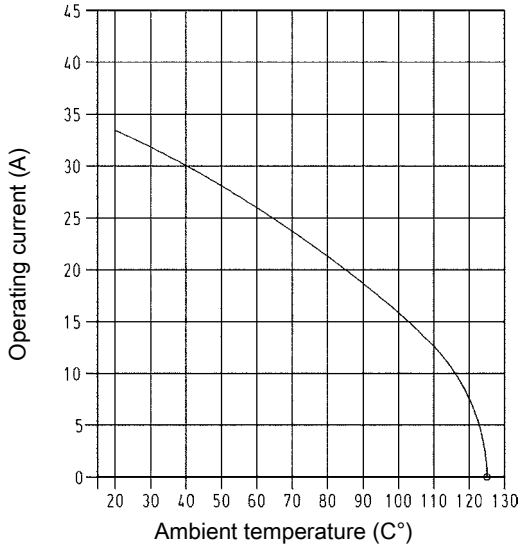

① Housing Han® 16 B with 1 Han® HV module Wire cross section 2.5 mm²

Technical characteristics

Contacts	2
Electrical data acc. to IEC 61984	**40 A 2900/5000 V 15 kV 3** **16 A 2900/5000 V 15 kV 3**
Rated current	40 A, 16 A
Rated voltage conductor - ground	2900 V
Rated voltage conductor - conductor	5000 V
Rated impulse voltage	15 kV
Pollution degree	3
Insulation resistance	≥10^{10} Ohm
Limiting temperatures	-40 °C ... 125 °C
Flammability (insert) acc. to UL 94	V 0
Mating cycles	≥500
Material (insert)	polycarbonate/Teflon (PTFE)
Colour (insert)	RAL 7032 (light grey)
Material (contact)	copper alloy

Specifications and approvals

IEC 61984
IEC 60664-1
IEC 60352-4

Details

Crimping tools see chapter 90

Remarks on the crimp technique

The wire gauges mentioned in the catalogue refer to geometric wire gauges of cables.

Number of contacts

2

2900/5000 V
40 A

Identification	Wire cross section (mm²)	Part number male	Part number female	Drawing Dimensions in mm
Han-Modular®, Han® HV module, for Han® C crimp contacts, Crimp terminal ... 9 mm Range of delivery: 1 module, 2 locking sleeves, 2 heat shrink tubes Please order crimp contacts separately.		09 14 002 3023	09 14 002 3123	M 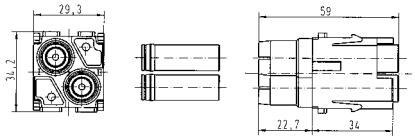 F 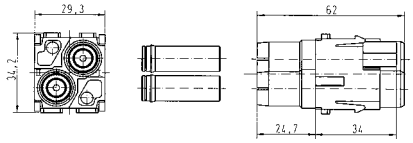 Assembly instructions 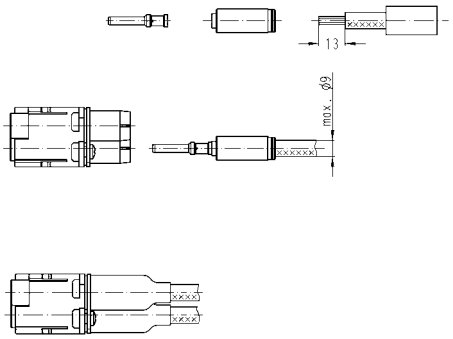 Crimp with tool 09 99 000 0888, 09 99 000 0110 or 09 99 000 0377. Snap crimped cable in the insert. Shrink the heat shrink tube over the rear of contact.
Han® C, Crimp contact, silver plated contacts, contact resistance ≤1 mOhm 	1.5 2.5 4 6 10	09 32 000 6104 09 32 000 6105 09 32 000 6107 09 32 000 6108 09 32 000 6109	09 32 000 6204 09 32 000 6205 09 32 000 6207 09 32 000 6208 09 32 000 6209	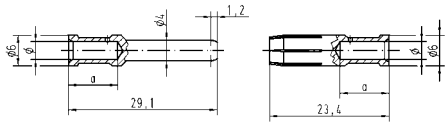 Wire gauge / ⌀ / Stripping length 1.5 mm² AWG 16 / 1.75 / 9.5 mm 2.5 mm² AWG 14 / 2.25 / 9.5 mm 4 mm² AWG 12 / 2.85 / 9.5 mm 6 mm² AWG 10 / 3.5 / 9.5 mm 10 mm² AWG 8 / 4.3 / 12 mm

Number of contacts

2

2900/5000 V
16 A

Identification	Wire cross section (mm²)	Part number male	Part number female	Drawing Dimensions in mm
Han-Modular®, Han® HV module, for Han E® crimp contacts, Crimp terminal Range of delivery: 1 module, 2 locking sleeves, 2 heat shrink tubes Please order crimp contacts separately.		09 14 002 3021	09 14 002 3121	M 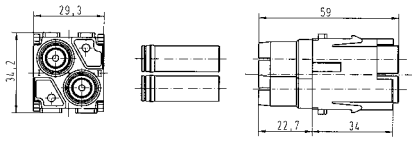 F 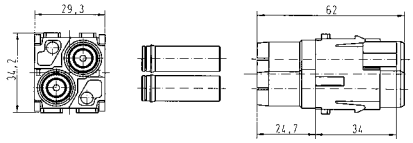 Assembly instructions 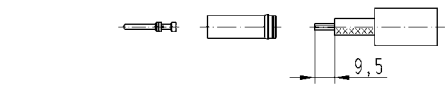 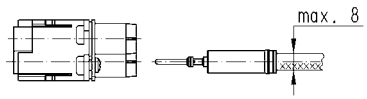 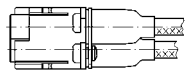 Crimp with crimping tool 09 99 000 0888 Snap crimped cable in the insert. Shrink the heat shrink tube over the rear of contact.
Han E®, Crimp contact, silver plated contacts, contact resistance ≤1 mOhm 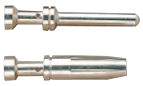	0.5 0.75 1 1.5 2.5 3 4	09 33 000 6121 09 33 000 6114 09 33 000 6105 09 33 000 6104 09 33 000 6102 09 33 000 6106 09 33 000 6107	09 33 000 6220 09 33 000 6214 09 33 000 6205 09 33 000 6204 09 33 000 6202 09 33 000 6206 09 33 000 6207	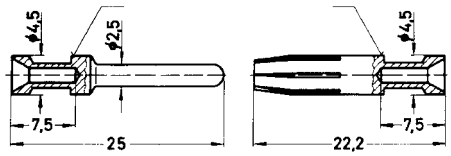 Identification / Wire gauge / Stripping length no groove 0.14-0.37 mm² AWG 26-22 7.5 mm no groove 0.5 mm² AWG 20 7.5 mm 1 groove* 0.75 mm² AWG 18 7.5 mm 1 groove 1 mm² AWG 18 7.5 mm 2 grooves 1.5 mm² AWG 16 7.5 mm 3 grooves 2.5 mm² AWG 14 7.5 mm wide groove 3 mm² AWG 12 7.5 mm no groove 4 mm² AWG 12 7.5 mm * on the back crimp collar

Features

- Suitable for Han E® crimp contacts
- 2 contacts up to 2500 V
- Insulator out of a voltage resistant teflon material
- Combination of all other modules (pneumatic, signal etc.)

Derating

Current carrying capacity

The current carrying capacity of the connectors is limited by the thermal load capability of the contact element material including the connections and the insulating parts. The derating curve is therefore valid for currents which flow constantly (non-intermittent) through each contact element of the connector evenly, without exceeding the allowed maximum temperature.

Measuring and testing techniques acc. to IEC 60512-5-2

Han E® crimp contacts

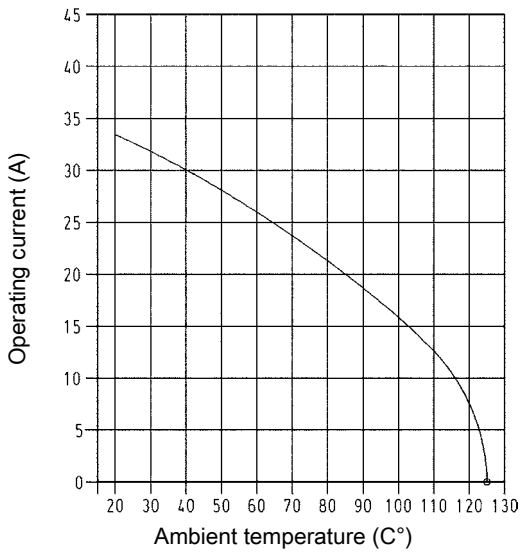

① Housing Han® 16 B with 1 Han® HV module Wire cross section 2.5 mm²

Technical characteristics

Contacts	2
Electrical data acc. to IEC 61984	**16 A 2500 V 15 kV 3**
Rated current	16 A
Rated voltage	2500 V
Rated impulse voltage	15 kV
Pollution degree	3
Insulation resistance	≥10^{10} Ohm
Limiting temperatures	-40 °C ... 125 °C
Flammability (insert) acc. to UL 94	V 0
Mating cycles	≥500
Material (insert)	polycarbonate/Teflon (PTFE)
Colour (insert)	RAL 7032 (light grey)
Material (contact)	copper alloy

Specifications and approvals

IEC 60664-1
IEC 61984
GL

Details

Crimping tools see chapter 90

Remarks on the crimp technique

The wire gauges mentioned in the catalogue refer to geometric wire gauges of cables.

Number of contacts

2

2500 V
16 A

Identification	Wire cross section (mm²)	Part number male	Part number female	Drawing Dimensions in mm
Han-Modular®, Han® HV module, Crimp terminal Range of delivery: 1 module, 2 locking sleeves, 2 heat shrink tubes Please order crimp contacts separately.		09 14 002 3025	09 14 002 3125	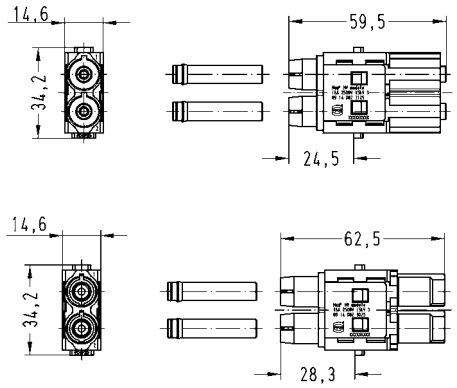
Han E®, Crimp contact, silver plated contacts, contact resistance ≤1 mOhm 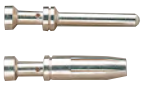	0.5 0.75 1 1.5 2.5 3 4	09 33 000 6121 09 33 000 6114 09 33 000 6105 09 33 000 6104 09 33 000 6102 09 33 000 6106 09 33 000 6107	09 33 000 6220 09 33 000 6214 09 33 000 6205 09 33 000 6204 09 33 000 6202 09 33 000 6206 09 33 000 6207	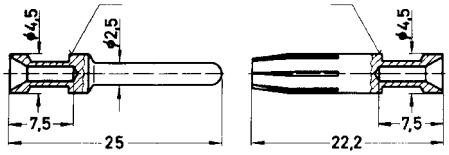

Identification	Wire gauge		Stripping length
no groove	0.14-0.37 mm²	AWG 26-22	7.5 mm
no groove	0.5 mm²	AWG 20	7.5 mm
1 groove*	0.75 mm²	AWG 18	7.5 mm
1 groove	1 mm²	AWG 18	7.5 mm
2 grooves	1.5 mm²	AWG 16	7.5 mm
3 grooves	2.5 mm²	AWG 14	7.5 mm
wide groove	3 mm²	AWG 12	7.5 mm
no groove	4 mm²	AWG 12	7.5 mm

* on the back crimp collar

Features

- Han-Quick Lock® or Crimp terminal available
- Standard module for signal up to 10 A

Derating

Current carrying capacity

The current carrying capacity of the connectors is limited by the thermal load capability of the contact element material including the connections and the insulating parts. The derating curve is therefore valid for currents which flow constantly (non-intermittent) through each contact element of the connector evenly, without exceeding the allowed maximum temperature.

Measuring and testing techniques acc. to IEC 60512-5-2

Quick Lock termination

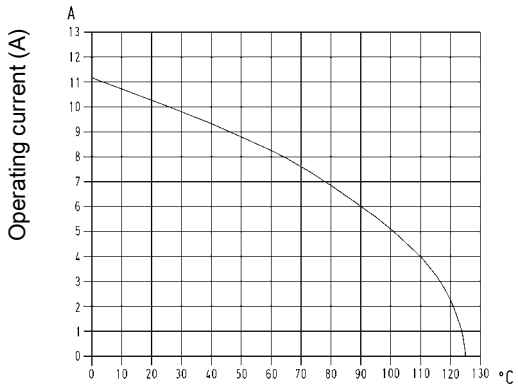

Ambient temperature (C°)

① 24 B hoods/housings with 6 modules Wire cross section 1.5 mm²

Crimp terminal

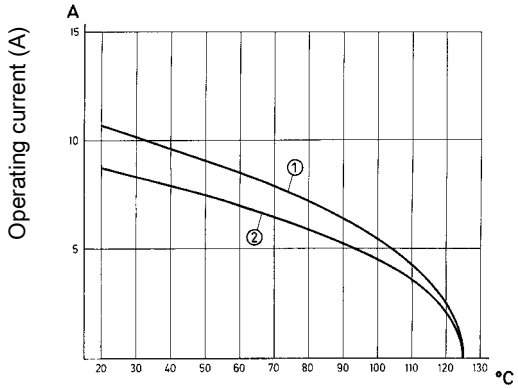

Ambient temperature (C°)

① 24 B hoods/housings with 6 modules Wire cross section 1.5 mm²
② 24 B hoods/housings with 6 modules Wire cross section 1 mm²

Technical characteristics

Contacts	12
Electrical data acc. to IEC 61984	**black slide** **10 A 250 V 4 kV 3** **10 A 250 V 4 kV 3**
Rated current	10 A
Rated voltage	250 V
Rated impulse voltage	4 kV
Pollution degree	3
Rated voltage acc. to UL	600 V
Insulation resistance	≥10^{10} Ohm
Limiting temperatures	-40 °C ... 125 °C
Flammability (insert) acc. to UL 94	V 0
Mating cycles	≥500
Mating cycles with HMC contacts	≥10000
Material (insert)	polycarbonate
Colour (insert)	RAL 7032 (light grey)
Material (contact)	copper alloy

Specifications and approvals

IEC 60664-1
IEC 61984

Details

Crimping tools see chapter 90

Remarks on the crimp technique

The wire gauges mentioned in the catalogue refer to geometric wire gauges of cables.

Designed for 10,000 mating cycles (only with Han D® HMC crimp contacts and with Han-Modular® Docking frame)

Number of contacts

12+ ⏚

250 V
10 A

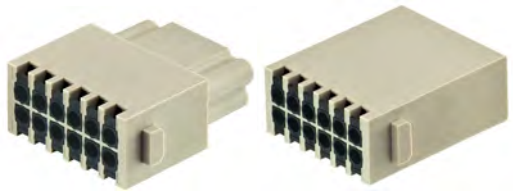

Identification	Wire cross section (mm²)	Part number male	Part number female	Drawing Dimensions in mm
Han-Quick Lock® Han-Modular®, Han DD® module, Han-Quick Lock® termination, black slide, silver plated contacts, contact resistance ≤3 mOhm 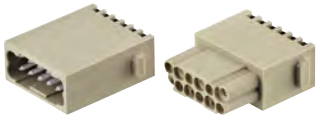	0.25 – 1.5	09 14 012 2632	09 14 012 2732	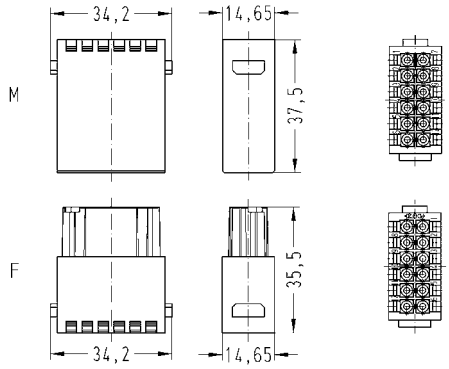 Contact arrangement (view from termination side)
Han-Quick Lock® Han-Modular®, Han DD® module, Han-Quick Lock® termination, black slide, gold plated contacts, contact resistance ≤3 mOhm	0.25 – 1.5	09 14 012 2634	09 14 012 2734	
Han-Modular®, Han DD® module, Crimp terminal 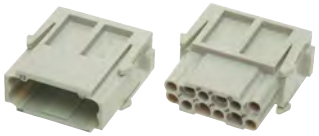 Please order crimp contacts separately.		09 14 012 3001	09 14 012 3101	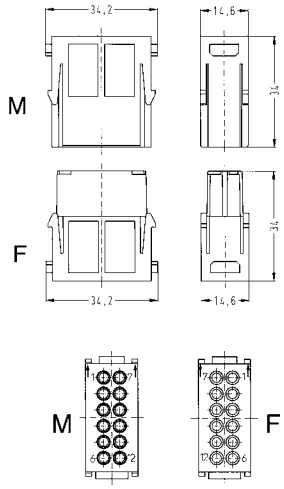 Contact arrangement (view from termination side)

Identification	Wire cross section (mm²)	Part number male	Part number female	Drawing Dimensions in mm
Han D®, Crimp contact, gold plated contacts, contact resistance ≤3 mOhm	0.14 – 0.37 0.5 0.75 1 1.5 2.5	09 15 000 6124 09 15 000 6123 09 15 000 6125 09 15 000 6122 09 15 000 6121 09 15 000 6126	09 15 000 6224 09 15 000 6223 09 15 000 6225 09 15 000 6222 09 15 000 6221 09 15 000 6226	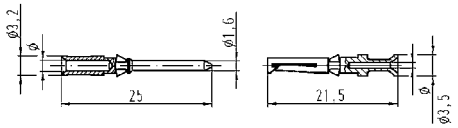

Wire gauge		⌀	Stripping length
0.14-0.37 mm²	AWG 26-22	0.9 mm	8 mm
0.5 mm²	AWG 20	1.1 mm	8 mm
0.75 mm²	AWG 18	1.3 mm	8 mm
1 mm²	AWG 18	1.45 mm	8 mm
1.5 mm²	AWG 16	1.75 mm	8 mm
2.5 mm²	AWG 14	2.25 mm	6 mm

Han-Modular

Han D®, Crimp contact, silver plated contacts, contact resistance ≤3 mOhm	0.14 – 0.37 0.5 0.75 1 1.5 2.5	09 15 000 6104 09 15 000 6103 09 15 000 6105 09 15 000 6102 09 15 000 6101 09 15 000 6106	09 15 000 6204 09 15 000 6203 09 15 000 6205 09 15 000 6202 09 15 000 6201 09 15 000 6206	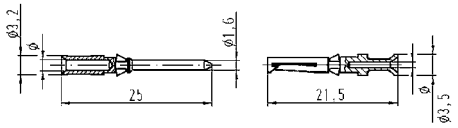

Wire gauge		⌀	Stripping length
0.14-0.37 mm²	AWG 26-22	0.9 mm	8 mm
0.5 mm²	AWG 20	1.1 mm	8 mm
0.75 mm²	AWG 18	1.3 mm	8 mm
1 mm²	AWG 18	1.45 mm	8 mm
1.5 mm²	AWG 16	1.75 mm	8 mm
2.5 mm²	AWG 14	2.25 mm	6 mm

F.O. contact for 1 mm plastic fibre		20 10 001 3211	20 10 001 3221	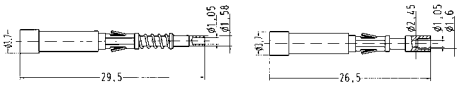 20 10 001 3211 + 20 10 001 3221

Features

- Suitable for Han D® crimp contacts
- High contact density

Derating

Current carrying capacity

The current carrying capacity of the connectors is limited by the thermal load capability of the contact element material including the connections and the insulating parts. The derating curve is therefore valid for currents which flow constantly (non-intermittent) through each contact element of the connector evenly, without exceeding the allowed maximum temperature.

Measuring and testing techniques acc. to IEC 60512-5-2

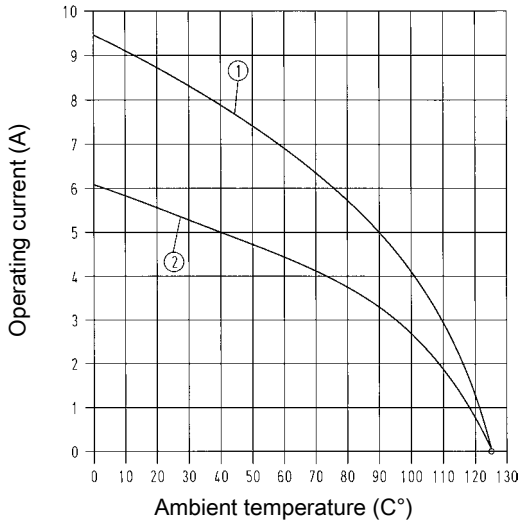

① 24 B hoods/housings with 6 modules Wire cross section 1.5 mm²
② 24 B hoods/housings with 6 modules Wire cross section 1 mm²

Technical characteristics

Contacts	17
Electrical data acc. to IEC 61984	**10 A 160 V 2.5 kV 3**
Rated current	10 A
Rated voltage	160 V
Rated impulse voltage	2.5 kV
Pollution degree	3
Rated voltage acc. to UL	250 V
Insulation resistance	≥10^{10} Ohm
Limiting temperatures	-40 °C ... 125 °C
Flammability (insert) acc. to UL 94	V 0
Mating cycles	≥500
Mating cycles with HMC contacts	≥10000
Material (insert)	polycarbonate
Colour (insert)	RAL 7032 (light grey)
Material (contact)	copper alloy

Specifications and approvals

IEC 60664-1
IEC 61984

Details

Crimping tools see chapter 90

Remarks on the crimp technique

The wire gauges mentioned in the catalogue refer to geometric wire gauges of cables.

Designed for 10,000 mating cycles (only with Han D® HMC crimp contacts and with Han-Modular® Docking frame)

Number of contacts

17

160 V
10 A

Identification	Wire cross section (mm²)	Part number male	Part number female	Drawing Dimensions in mm
Han-Modular®, Han® DDD module, Crimp terminal Please order crimp contacts separately.		09 14 017 3001	09 14 017 3101	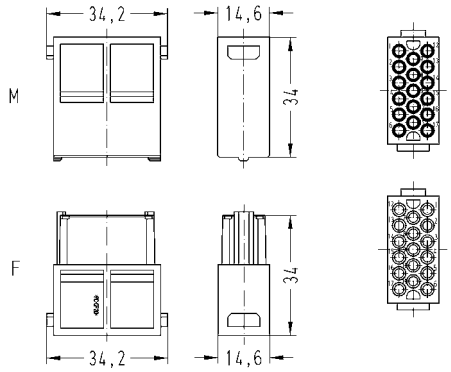 Contact arrangement (view from termination side)
Han D®, Crimp contact, gold plated contacts, contact resistance ≤3 mOhm 	0.14 – 0.37 0.5 0.75 1 1.5 2.5	09 15 000 6124 09 15 000 6123 09 15 000 6125 09 15 000 6122 09 15 000 6121 09 15 000 6126	09 15 000 6224 09 15 000 6223 09 15 000 6225 09 15 000 6222 09 15 000 6221 09 15 000 6226	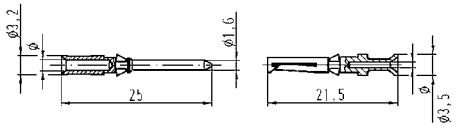 Wire gauge / ø / Stripping length 0.14-0.37 mm² AWG 26-22 / 0.9 mm / 8 mm 0.5 mm² AWG 20 / 1.1 mm / 8 mm 0.75 mm² AWG 18 / 1.3 mm / 8 mm 1 mm² AWG 18 / 1.45 mm / 8 mm 1.5 mm² AWG 16 / 1.75 mm / 8 mm 2.5 mm² AWG 14 / 2.25 mm / 6 mm
Han D®, Crimp contact, silver plated contacts, contact resistance ≤3 mOhm 	0.14 – 0.37 0.5 0.75 1 1.5 2.5	09 15 000 6104 09 15 000 6103 09 15 000 6105 09 15 000 6102 09 15 000 6101 09 15 000 6106	09 15 000 6204 09 15 000 6203 09 15 000 6205 09 15 000 6202 09 15 000 6201 09 15 000 6206	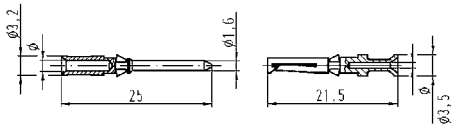 Wire gauge / ø / Stripping length 0.14-0.37 mm² AWG 26-22 / 0.9 mm / 8 mm 0.5 mm² AWG 20 / 1.1 mm / 8 mm 0.75 mm² AWG 18 / 1.3 mm / 8 mm 1 mm² AWG 18 / 1.45 mm / 8 mm 1.5 mm² AWG 16 / 1.75 mm / 8 mm 2.5 mm² AWG 14 / 2.25 mm / 6 mm
F.O. contact for 1 mm plastic fibre		20 10 001 3211	20 10 001 3221	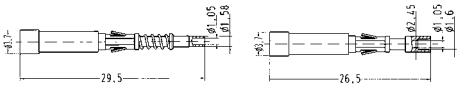 20 10 001 3211 + 20 10 001 3221

Features

- Suitable for D-Sub crimp contacts
- High contact density

Derating

Current carrying capacity

The current carrying capacity of the connectors is limited by the thermal load capability of the contact element material including the connections and the insulating parts. The derating curve is therefore valid for currents which flow constantly (non-intermittent) through each contact element of the connector evenly, without exceeding the allowed maximum temperature.

Measuring and testing techniques acc. to IEC 60512-5-2

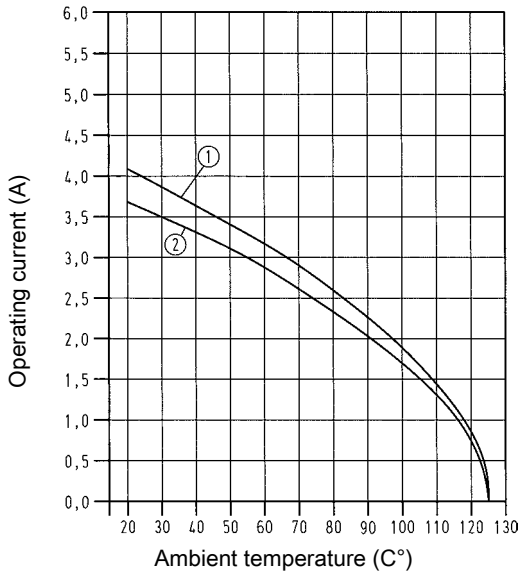

① 24 B hoods/housings with 6 modules; turned contacts Wire cross section 0.5 mm²
② 24 B hoods/housings with 6 modules; stamped contacts Wire cross section 0.5 mm²

Technical characteristics

Contacts	25
Electrical data acc. to IEC 61984	**4 A 50 V 0.8 kV 3**
Rated current	4 A
Rated voltage	50 V
Rated impulse voltage	0.8 kV
Pollution degree	3
Rated voltage acc. to UL	30 V
Insulation resistance	≥10^{10} Ohm
Limiting temperatures	-40 °C ... 125 °C
Flammability (insert) acc. to UL 94	V 0
Mating cycles	≥500
Material (insert)	polycarbonate
Colour (insert)	RAL 7032 (light grey)

Specifications and approvals

IEC 60664-1
IEC 61984

Details

Guide pins and bushes are recommended (see chapter 80).

Number of contacts

25

50 V
4 A

Identification	Wire cross section (mm²)	Part number male	Part number female	Drawing Dimensions in mm
Han-Modular®, Han® High Density module, Crimp terminal Please order crimp contacts separately.		09 14 025 3001	09 14 025 3101	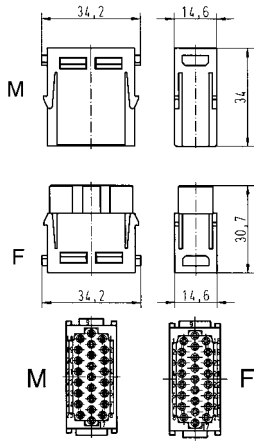 Contact arrangement (view from termination side)
Han® D-Sub crimp contact, turned contacts 	0.09 – 0.25 0.13 – 0.33 0.25 – 0.52	09 67 000 7576 09 67 000 5576 09 67 000 8576	09 67 000 7476 09 67 000 5476 09 67 000 8476	

Wire gauge	max. insulation diameter	Stripping length
0.09-0.25 mm²	1.7	4 mm
0.13-0.33 mm²	1.7	4 mm
0.25-0.52 mm²	1.7	4 mm

Features

- 9-pin D-Sub connector of the Han-Modular® system
- Suitable for the transmission of sensetive signals
- Compatible to crimp, solder or IDC termination

Technical characteristics

Contacts	9
Electrical data acc. to IEC 61984	**5 A 50 V 0.8 kV 3**
Rated current	5 A
Rated voltage	50 V
Rated impulse voltage	0.8 kV
Pollution degree	3
Rated voltage acc. to UL	30 V
Insulation resistance	≥10^{10} Ohm
Limiting temperatures	-40 °C ... 125 °C
Flammability (insert) acc. to UL 94	V 0
Mating cycles	≥500
Material (insert)	polycarbonate
Colour (insert)	RAL 7032 (light grey)
Material (shielding element)	zinc die-cast alloy

Specifications and approvals

IEC 60664-1
IEC 61984

Details

Guide pins and bushes are recommended (see chapter 80).

Number of contacts

9

50 V
5 A

Identification	Wire cross section (mm²)	Part number male	Part number female	Drawing Dimensions in mm
Han-Modular®, Han® D-Sub module, Crimp terminal Please order crimp contacts separately.		09 14 009 3001	09 14 009 3101	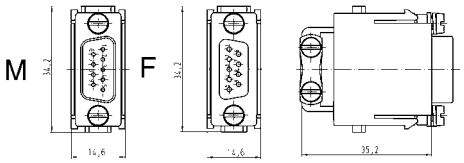
Han-Modular®, Han® D-Sub module, for RS 485-based bus systems with T-functionality, Screw terminal 	0.08 – 0.52		09 14 009 3151	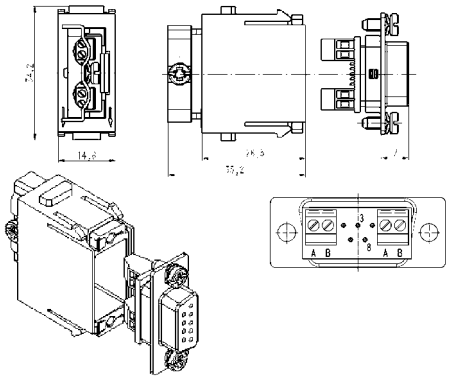 Contact arrangement (view from termination side) Signal A: Contact no. 8 Signal B: Contact no. 3
Han-Modular®, Adapter module, for one cabel, for 9-pin D-Sub 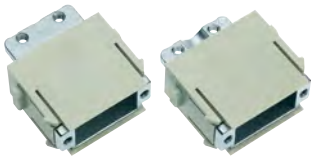		09 14 000 9930	09 14 000 9931	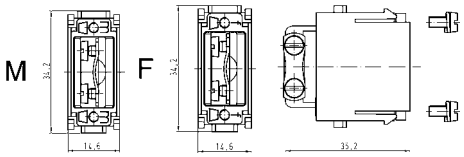
Han-Modular®, Adapter module, for two cabels, for 9-pin D-Sub 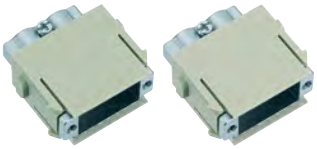		09 14 000 9932	09 14 000 9933	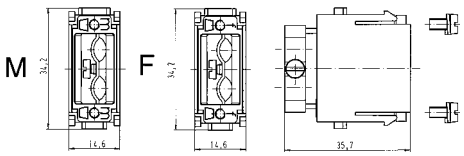

Identification	Wire cross section (mm²)	Part number male	Part number female	Drawing Dimensions in mm
Han® D-Sub crimp contact, turned contacts	0.09 – 0.25 0.13 – 0.33 0.25 – 0.52	09 67 000 7576 09 67 000 5576 09 67 000 8576	09 67 000 7476 09 67 000 5476 09 67 000 8476	

Wire gauge	max. insulation diameter	Stripping length
0.09-0.25 mm²	1.7	4 mm
0.13-0.33 mm²	1.7	4 mm
0.25-0.52 mm²	1.7	4 mm

Features

- According to USB 2.0 / USB 3.0 specification
- Simple and cost effective termination by plug in patch cable
- Cable tie strain relief

Technical characteristics

Contacts	4, 8
Electrical data acc. to IEC 61984	**1 A 50 V 0.8 kV 3**
Rated current	1 A
Rated voltage	50 V
Rated impulse voltage	0.8 kV
Pollution degree	3
Rated voltage acc. to UL	30 V
Insulation resistance	≥10^{10} Ohm
Limiting temperatures	-40 °C ... 85 °C
Flammability (insert) acc. to UL 94	V 0
Mating cycles	≥500
Material (insert)	polycarbonate
Colour (insert)	RAL 7032 (light grey)

Specifications and approvals

IEC 60664-1
IEC 61984

Han® USB module

Number of contacts

4,8

50 V
1 A

Identification	Part number male	Part number female	Drawing Dimensions in mm
Han-Modular®, Han® USB module, Module for patch cable, USB 2.0	09 14 001 4601	09 14 001 4701	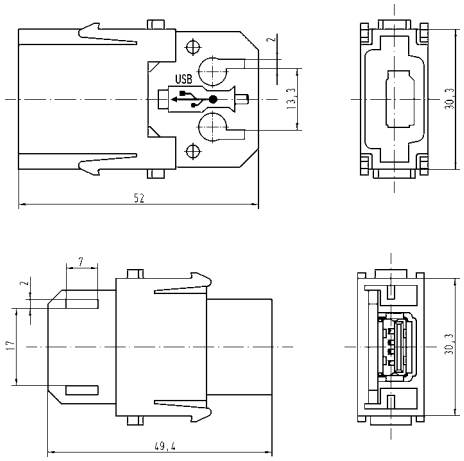
Han-Modular®, Han® USB module, Module for screw termination, USB 2.0	09 14 001 4651		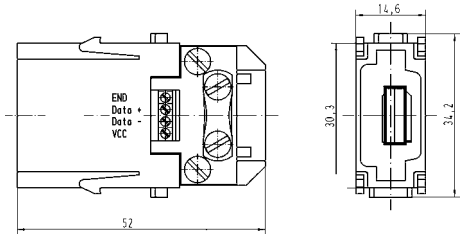
Han-Modular®, Han® USB module, Module for patch cable, USB 3.0		09 14 001 4703	

Han-Modular

Han® FireWire module

Number of contacts

6

50 V
1 A

Features

- Compatibel to IEEE 1394
- Simple and cost effective termination by plug in patch cable
- Cable tie strain relief

Technical characteristics

Contacts	6
Electrical data acc. to IEC 61984	**1 A 50 V 0.8 kV 3**
Rated current	1 A
Rated voltage	50 V
Rated impulse voltage	0.8 kV
Pollution degree	3
Insulation resistance	≥10^{10} Ohm
Limiting temperatures	-40 °C ... 85 °C
Flammability (insert) acc. to UL 94	V 0
Mating cycles	≥500
Material (insert)	polycarbonate
Colour (insert)	RAL 7032 (light grey)

Specifications and approvals

IEC 60664-1
IEC 61984

Identification	Part number male	Part number female	Drawing Dimensions in mm
Han-Modular®, Han® FireWire module, Module for patch cable 	09 14 001 4611	09 14 001 4711	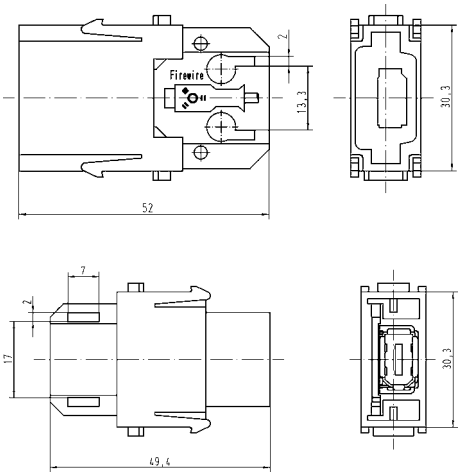

Han® RJ45 module, female

Number of contacts

8

50 V
1 A

Features

- Single module with standard shielded RJ45 plug and jack
- Cat 6 for all data pairs (all 8 pins)
- RoHS compliant
- Patch cables are assembled/removed without tools

Technical characteristics

Contacts	8
Electrical data acc. to IEC 61984	**1 A 50 V 0.8 kV 3**
Rated current	1 A
Rated voltage	50 V
Rated impulse voltage	0.8 kV
Pollution degree	3
Rated voltage acc. to UL	30 V
Insulation resistance	≥10^{10} Ohm
Limiting temperatures	-40 °C ... 70 °C
Flammability (insert) acc. to UL 94	V 0
Mating cycles	≥500
Material (insert)	polycarbonate
Colour (insert)	RAL 7032 (light grey)
Transmission characteristics	Category 6 / Class E up to 250 MHz, according to ISO/IEC 11 801:2002 and EN 50 173-1
Data rate copper	10 Mbit/s, 100 Mbit/s, 1000 Mbit/s, 10000 Mbit/s

Specifications and approvals

IEC 60664-1
IEC 61984

Identification	Part number	Drawing Dimensions in mm
Han-Modular®, Han® RJ45 module, Gender changer, for patch cable, Cat. 6	09 14 001 4721	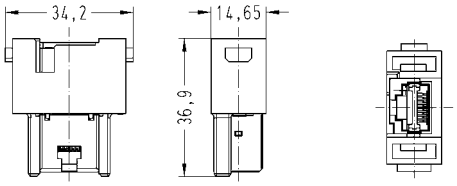

Han® RJ45 module, male

Number of contacts

8

50 V
1 A

Features

- Single module with standard shielded RJ45 plug and jack
- RoHS compliant
- The RJ45 inserts are protected by a reliable plastic insulator
- Patch cables are assembled/removed without tools

Technical characteristics

Contacts	8
Electrical data acc. to IEC 61984	**1 A 50 V 0.8 kV 3**
Rated current	1 A
Rated voltage	50 V
Rated impulse voltage	0.8 kV
Pollution degree	3
Rated voltage acc. to UL	30 V
Insulation resistance	≥10^{10} Ohm
Limiting temperatures	-40 °C ... 70 °C
Flammability (insert) acc. to UL 94	V 0
Mating cycles	≥500
Material (insert)	polycarbonate
Colour (insert)	RAL 7032 (light grey)

Specifications and approvals

IEC 60664-1
IEC 61984

Identification		Part number	Drawing Dimensions in mm
Han-Modular®, Adapter, for patch cable		09 14 000 9966	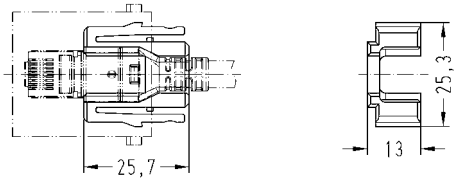
Han-Modular®, Han® RJ45 module, for adapter		09 14 001 4623	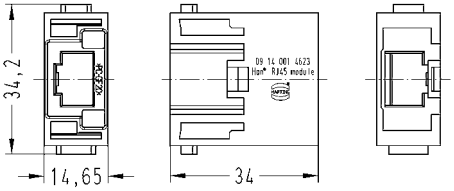

Han® RJ45 module, male

Number of contacts

8

50 V
1 A

Features

- Single module with standard shielded RJ45 plug and jack
- RoHS compliant
- The RJ45 inserts are protected by a reliable plastic insulator

Technical characteristics

Contacts	8
Electrical data acc. to IEC 61984	**1 A 50 V 0.8 kV 3**
Rated current	1 A
Rated voltage	50 V
Rated impulse voltage	0.8 kV
Pollution degree	3
Rated voltage acc. to UL	30 V
Insulation resistance	≥10^{10} Ohm
Limiting temperatures	-40 °C ... 70 °C
Flammability (insert) acc. to UL 94	V 0
Mating cycles	≥500
Material (insert)	polycarbonate
Colour (insert)	RAL 7032 (light grey)

Specifications and approvals

IEC 60664-1
IEC 61984

Han-Modular

Identification	Part number	Drawing Dimensions in mm
Han-Modular®, Han® RJ45 module, for crimp inserts	09 14 001 4622	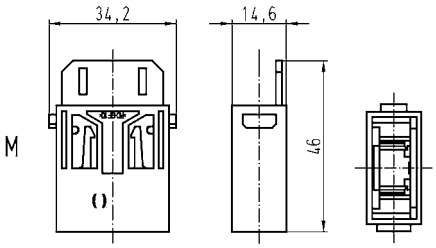
Han-Modular®, Insert for Han® RJ45 module, Cat. 5e	09 12 000 9958	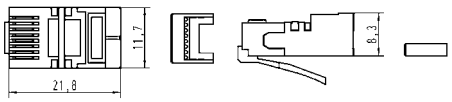

Han® RJ45 module, male

Number of contacts

4,8

50 V
1 A

Features

- Single module with standard shielded RJ45 plug and jack
- The RJ45 inserts are protected by a reliable plastic insulator
- 360° shielded contact
- Field assembly without tools possible by means of HARAX® rapid termination in IDC technology
- Gigalink: Field assembly by means of piercing contacts
- Suitable for termination of massive and flexible wires
- Gigalink: Suitable for termination of flexible wires

Technical characteristics

Contacts	8, 4
Electrical data acc. to IEC 61984	**1 A 50 V 0.8 kV 3**
Rated current	1 A
Rated voltage	50 V
Rated impulse voltage	0.8 kV
Pollution degree	3
Rated voltage acc. to UL	30 V
Insulation resistance	≥10^{10} Ohm
Limiting temperatures	-40 °C ... 70 °C
Flammability (insert) acc. to UL 94	V 0
Mating cycles	≥500
Material (insert)	polycarbonate, polyamide
Colour (insert)	RAL 7032 (light grey)
Transmission characteristics	Category 6a / Class EA up to 500 MHz, according to ISO/IEC 11 801:2002 and EN 50 173-1, Category 5 / Class D up to 100 MHz, according to ISO/IEC 11 801:2002 and EN 50 173-1, Category 6 / Class E up to 250 MHz, according to ISO/IEC 11 801:2002 and EN 50 173-1
Data rate copper	10 Mbit/s, 100 Mbit/s, 1000 Mbit/s, 10000 Mbit/s

Specifications and approvals

IEC 60664-1
IEC 61984
IEC 60603-7

Identification	Part number	Drawing Dimensions in mm
Han-Modular®, Han® RJ45 module, for adapter	09 14 001 4623	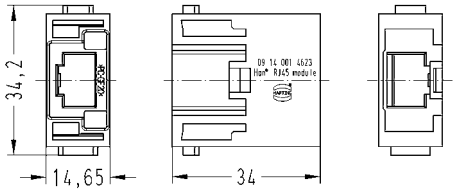

Han® RJ45 module, male

Identification	Part number	Drawing Dimensions in mm
Han-Modular®, Han® RJ Industrial adapter, RJ Industrial RJ45 Gigalink connector set, AWG 28 ... 24, 10 Mbit/s, 100 Mbit/s, 1000 Mbit/s, 10000 Mbit/s, IDC contacts, Cat. 6a 	09 45 400 1520	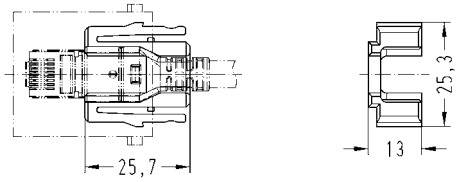 Wire outside diameter ≤ 1.05 mm
Han-Modular®, Han® RJ Industrial adapter, RJ Industrial RJ45 connector set, AWG 24 ... 22, 10 Mbit/s, 100 Mbit/s, IDC contacts, Cat. 5 	09 45 400 1100	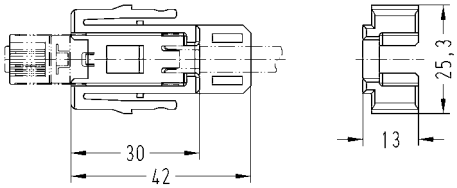 Wire outside diameter ≤ 1.6 mm
Han-Modular®, Han® RJ Industrial adapter, RJ Industrial RJ45 connector set, AWG 26, 10 Mbit/s, 100 Mbit/s, IDC contacts, Cat. 5 	09 45 400 1109	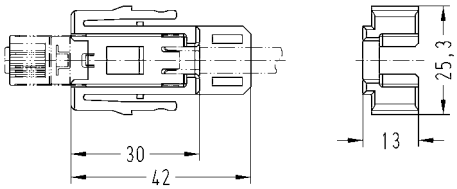 Wire outside diameter ≤ 1.6 mm
Han-Modular®, Han® RJ Industrial adapter, RJ Industrial RJ45 connector set, AWG 27 ... 22, 10 Mbit/s, 100 Mbit/s, 1000 Mbit/s, 10000 Mbit/s, IDC contacts, Cat. 6 	09 45 400 1560	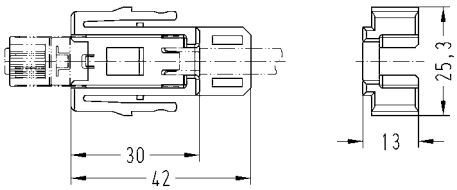 Wire outside diameter ≤ 1.5 mm

RJ45 patch cable

Features

- Locking lever protection for RJ45 connector latch
- Very short plug design in combination with robust bend protection
- RoHS compliant
- Fully EMC screened (aluminium-clad foil and braid)

Technical characteristics

Limiting temperatures	-40 °C ... 80 °C
Limiting temperatures (flexible)	0 °C ... 60 °C
Flammability (cable) acc. to UL 94	flame retardant, halogen-free
Degree of protection acc. to IEC 60529	IP20
Material (cable)	SF/UTP, PUR, PUR Elastomer
Colour (cable)	yellow
Cable type, copper	1:1 EIA/TIA 568 B, 8 poles
Transmission characteristics	Category 5 / Class D up to 100 MHz, according to ISO/IEC 24 702 or ISO/IEC 11 801, Category 5e / Class D up to 100 MHz, according to ISO/IEC 61 935-2
Data rate copper	10 Mbit/s, 100 Mbit/s, 1000 Mbit/s

Specifications and approvals

ISO/IEC 11801
ISO/IEC 24702
ISO/IEC 61935-2

Identification	Cable length	Part number	Drawing Dimensions in mm
RJ45 patch cable, Cat. 5e	0.2 m	09 47 474 7001	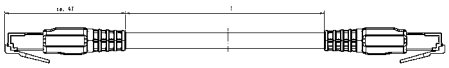
	0.3 m	09 47 474 7002	
	0.4 m	09 47 474 7003	
	0.5 m	09 47 474 7004	
	0.6 m	09 47 474 7005	
	0.7 m	09 47 474 7006	
	0.8 m	09 47 474 7007	
	0.9 m	09 47 474 7008	
	1 m	09 47 474 7009	
	2 m	09 47 474 7011	
	3 m	09 47 474 7013	
	4 m	09 47 474 7014	
	5 m	09 47 474 7015	
	6 m	09 47 474 7016	
	7 m	09 47 474 7017	
	8 m	09 47 474 7019	
	9 m	09 47 474 7020	
	10 m	09 47 474 7021	
	15 m	09 47 474 7022	
	20 m	09 47 474 7023	
	1.5 m	09 47 474 7010	
	2.5 m	09 47 474 7012	
	7.5 m	09 47 474 7018	

RJ45 patch cable

Features

- Locking lever protection for RJ45 connector latch
- Very short plug design in combination with robust bend protection
- RoHS compliant
- Fully EMC screened (aluminium-clad foil and braid)

Technical characteristics

Limiting temperatures	-40 °C ... 80 °C
Limiting temperatures (flexible)	0 °C ... 60 °C
Flammability (cable) acc. to UL 94	flame retardant, halogen-free
Degree of protection acc. to IEC 60529	IP20
Material (cable)	SF/UTP, PUR
Colour (cable)	yellow
Cable type, copper	1:1 EIA/TIA 568 B, 8 poles
Transmission characteristics	Category 6 / Class E up to 250 MHz, according to ISO/IEC 24 702 or ISO/IEC 11 801, Category 6 / Class E up to 250 MHz, according to ISO/IEC 61 935-2
Data rate copper	10 Mbit/s, 100 Mbit/s, 1000 Mbit/s

Specifications and approvals

ISO/IEC 11801
ISO/IEC 24702
ISO/IEC 61935-2

Identification	Cable length	Part number	Drawing Dimensions in mm
RJ45 patch cable, Cat. 6	0.2 m	09 47 474 7101	
	0.3 m	09 47 474 7102	
	0.4 m	09 47 474 7103	
	0.5 m	09 47 474 7104	
	0.6 m	09 47 474 7105	
	0.7 m	09 47 474 7106	
	0.8 m	09 47 474 7107	
	0.9 m	09 47 474 7108	
	1 m	09 47 474 7109	
	2 m	09 47 474 7111	
	3 m	09 47 474 7113	
	4 m	09 47 474 7114	
	5 m	09 47 474 7115	
	6 m	09 47 474 7116	
	7 m	09 47 474 7117	
	8 m	09 47 474 7119	
	9 m	09 47 474 7120	
	10 m	09 47 474 7121	
	15 m	09 47 474 7122	
	20 m	09 47 474 7123	
	1.5 m	09 47 474 7110	
	2.5 m	09 47 474 7112	
	7.5 m	09 47 474 7118	

Features

- Shielding bus separate from housing potential
- Suitable for the transmission of sensitive signals (e.g. bus signals)
- Usuable for Gigabit Ethernet Cat. 6A

Technical characteristics

Contacts	8
Electrical data acc. to IEC 61984	**5 A 50 V 0.8 kV 3**
Rated current	5 A
Rated voltage	50 V
Rated impulse voltage	0.8 kV
Pollution degree	3
Insulation resistance	≥10^{10} Ohm
Limiting temperatures	-40 °C ... 85 °C
Flammability (insert) acc. to UL 94	V 0
Mating cycles	≥500
Material (insert)	polycarbonate
Colour (insert)	RAL 7032 (light grey)
Material (shielding element)	zinc die-cast alloy
Material (outer conductor)	zinc alloy
Surface (outer conductor)	nickel plated contacts

Specifications and approvals

IEC 61984
IEC 60664-1

Number of contacts

8

50 V
5 A
+ shielding

Identification	Wire cross section (mm²)	Part number male	Part number female	Drawing Dimensions in mm
Han-Modular®, Han® GigaBit Insert, Crimp terminal Please order crimp contacts separately. Please order the adapter module separately.		09 14 008 3011	09 14 008 3111	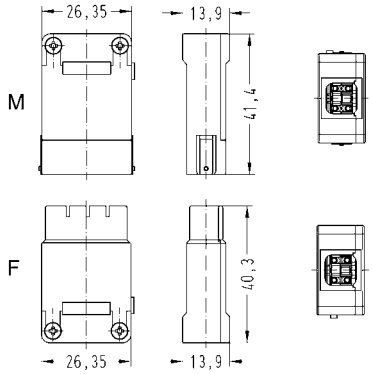 Cable outside diameter 5 ... 12
Han-Modular®, Adapter module 		09 14 001 3011	09 14 001 3111	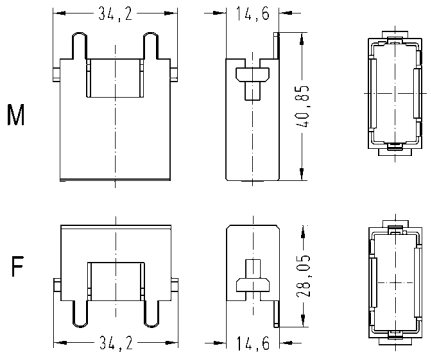
Han® D-Sub crimp contact, turned contacts 	0.09 – 0.25 0.13 – 0.33 0.25 – 0.52	09 67 000 7576 09 67 000 5576 09 67 000 8576	09 67 000 7476 09 67 000 5476 09 67 000 8476	

Wire gauge	max. insulation diameter	Stripping length
0.09-0.25 mm²	1.7	4 mm
0.13-0.33 mm²	1.7	4 mm
0.25-0.52 mm²	1.7	4 mm

Features

- Shielding bus separate from housing potential
- Suitable for the transmission of sensitive signals (e.g. bus signals)

Technical characteristics

Contacts	20
Electrical data acc. to IEC 61984	**4 A 32 V 0.8 V 3**
Rated current	4 A
Rated voltage	32 V
Rated impulse voltage	0.8 V
Pollution degree	3
Insulation resistance	≥10^{10} Ohm
Limiting temperatures	-40 °C ... 125 °C -40 °C ... 85 °C
Flammability (insert) acc. to UL 94	V 0
Mating cycles	≥500
Material (insert)	polycarbonate
Colour (insert)	RAL 7032 (light grey)
Material (contact)	copper alloy
Material (shielding element)	zinc die-cast alloy
Material (outer conductor)	zinc alloy
Surface (outer conductor)	nickel plated contacts

Specifications and approvals

IEC 60664-1
IEC 61984

Number of contacts

20

32 V
4 A
+ shielding

Identification	Wire cross section (mm²)	Part number male	Part number female	Drawing Dimensions in mm
Han-Modular®, Han® Shielded Module insert, Crimp terminal, contact resistance ≤4 mOhm Please order crimp contacts separately. Please order the adapter module separately.		09 14 020 3013	09 14 020 3113	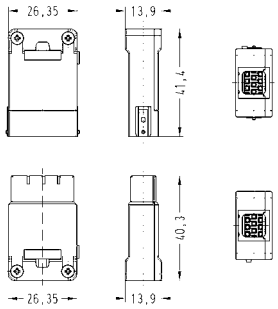
Han-Modular®, Adapter module 		09 14 001 3011	09 14 001 3111	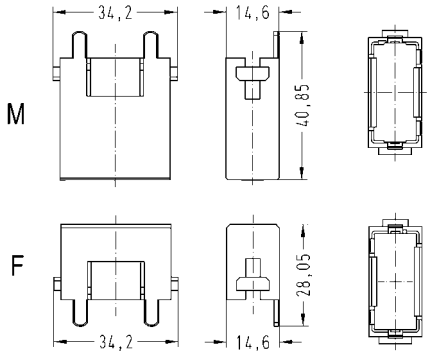
Han® D-Sub crimp contact, turned contacts 	0.09 – 0.25 0.13 – 0.33 0.25 – 0.52	09 67 000 7576 09 67 000 5576 09 67 000 8576	09 67 000 7476 09 67 000 5476 09 67 000 8476	

Wire gauge	max. insulation diameter	Stripping length
0.09-0.25 mm²	1.7	4 mm
0.13-0.33 mm²	1.7	4 mm
0.25-0.52 mm²	1.7	4 mm

Features

- Shielding bus separate from housing potential
- Usuable for MegaBit Ethernet Cat. 5e
- Suitable for Han B, Han M, Han EMC and Han HPR hoods/ housings, high construction

Technical characteristics

Contacts	2 x 4
Electrical data acc. to IEC 61984	**10 A 50 V 0.8 kV 3**
Rated current	10 A
Rated voltage	50 V
Rated impulse voltage	0.8 kV
Pollution degree	3
Insulation resistance	≥10^{10} Ohm
Limiting temperatures	-40 °C ... 125 °C -40 °C ... 85 °C
Flammability (insert) acc. to UL 94	V 0
Mating cycles	≥500
Material (insert)	polycarbonate
Colour (insert)	RAL 7032 (light grey)
Material (contact)	copper alloy
Material (shielding element)	zinc die-cast alloy
Material (outer conductor)	zinc alloy
Surface (outer conductor)	nickel plated contacts

Specifications and approvals

IEC 60664-1
IEC 61984

Details

Crimping tools see chapter 90

Remarks on the crimp technique

The wire gauges mentioned in the catalogue refer to geometric wire gauges of cables.

Number of contacts

2 x 4

50 V
10 A

Identification	Wire cross section (mm²)	Part number male	Part number female	Drawing Dimensions in mm
Han-Modular®, Han® MegaBit Insert, Crimp terminal Please order crimp contacts separately. Please order the adapter module separately.		09 14 008 3016	09 14 008 3116	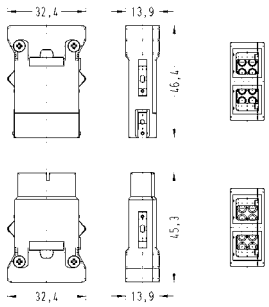
Han-Modular®, Han® MegaBit Insert, Crimp terminal, with additional shield connection to the hinged frame Please order crimp contacts separately. Please order the adapter module separately.		09 14 008 3017	09 14 008 3117	
Han-Modular®, Adapter module 		09 14 001 3011	09 14 001 3111	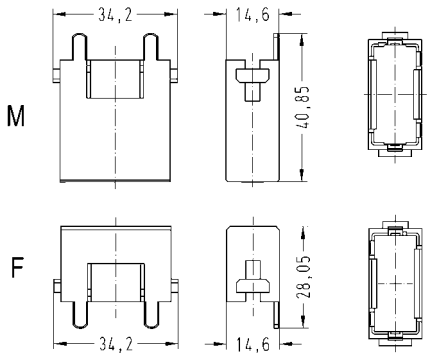

Identification	Wire cross section (mm²)	Part number male	Part number female	Drawing Dimensions in mm
Han D®, Crimp contact, gold plated contacts, contact resistance ≤3 mOhm	0.14 – 0.37	09 15 000 6124	09 15 000 6224	
	0.5	09 15 000 6123	09 15 000 6223	
	0.75	09 15 000 6125	09 15 000 6225	
	1	09 15 000 6122	09 15 000 6222	
	1.5	09 15 000 6121	09 15 000 6221	
	2.5	09 15 000 6126	09 15 000 6226	

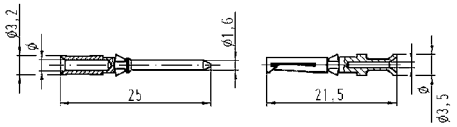

Wire gauge		⌀	Stripping length
0.14-0.37 mm²	AWG 26-22	0.9 mm	8 mm
0.5 mm²	AWG 20	1.1 mm	8 mm
0.75 mm²	AWG 18	1.3 mm	8 mm
1 mm²	AWG 18	1.45 mm	8 mm
1.5 mm²	AWG 16	1.75 mm	8 mm
2.5 mm²	AWG 14	2.25 mm	6 mm

Identification	D1	D2	Part number	Drawing Dimensions in mm
Crimp flange 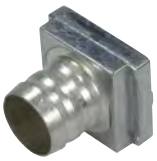 HARTING offers to test and define the best crimp flange and ferrule combination for customer specific cables.	3 mm	4 mm	61 03 000 0062	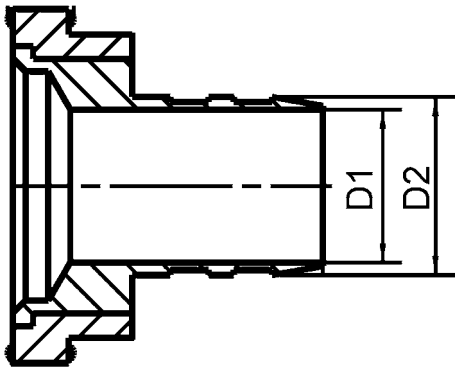
	4 mm	5 mm	61 03 000 0064	
	5 mm	6 mm	61 03 000 0066	
	6 mm	7 mm	61 03 000 0067	
	7 mm	8 mm	61 03 000 0069	
	8 mm	9 mm	61 03 000 0071	
	9 mm	10 mm	61 03 000 0072	
	3.5 mm	4 mm	61 03 000 0063	
	4.5 mm	5.5 mm	61 03 000 0065	
	5.5 mm	6.5 mm	61 03 000 0166	
	6.5 mm	7.5 mm	61 03 000 0068	
	7.5 mm	8.5 mm	61 03 000 0070	
	8.5 mm	9.5 mm	61 03 000 0165	

Identification	D3	D4	Part number	Drawing Dimensions in mm
Crimp ferrule HARTING offers to test and define the best crimp flange and ferrule combination for customer specific cables.	5 mm	6 mm	61 03 000 0045	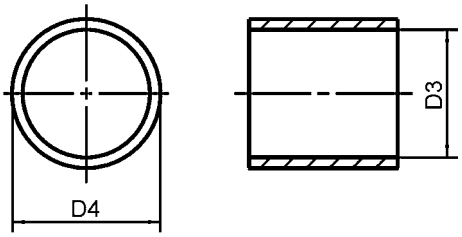
	6 mm	7 mm	61 03 000 0047	
	7 mm	8 mm	61 03 000 0049	
	8 mm	9 mm	61 03 000 0051	
	9 mm	10 mm	61 03 000 0053	
	10 mm	11 mm	61 03 000 0055	
	11 mm	12 mm	61 03 000 0057	
	12 mm	13 mm	61 03 000 0142	
	13 mm	14 mm	61 03 000 0127	
	5.5 mm	6.5 mm	61 03 000 0046	
	6.5 mm	7.5 mm	61 03 000 0048	
	7.5 mm	8.5 mm	61 03 000 0050	
	8.5 mm	9.5 mm	61 03 000 0052	
	9.5 mm	10.5 mm	61 03 000 0054	
	10.5 mm	11.5 mm	61 03 000 0056	
	11.5 mm	12.5 mm	61 03 000 0058	
	12.5 mm	13.5 mm	61 03 000 0059	
Cable clamp 5 mm ... 7 mm			61 03 000 0141	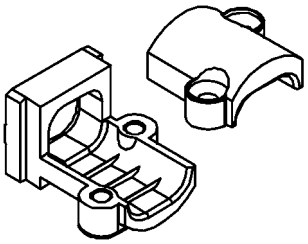
Cable clamp 7 mm ... 10 mm			61 03 000 0044	
Cable clamp 10 mm ... 12 mm			61 03 000 0143	

Features

- Shielding bus separate from housing potential
- Suitable for the transmission of sensitive signals (e.g. bus signals)
- The four pole Han® Quintax contact is suitable for Ethernet Cat. 5e and PROFIBUS when diagonally wiring of the data pairs

Technical characteristics

Contacts	2
Electrical data acc. to IEC 61984	**10 A 50 V 0.8 kV 3**
Rated current	10 A
Rated voltage	50 V
Rated impulse voltage	0.8 kV
Pollution degree	3
Insulation resistance	≥10^{10} Ohm
Limiting temperatures	-40 °C ... 85 °C
Flammability (insert) acc. to UL 94	V 0
Mating cycles	≥500
Material (insert)	polycarbonate, zinc alloy
Colour (insert)	RAL 7032 (light grey)
Material (contact)	copper alloy
Material (accessories)	metal

Specifications and approvals

IEC 60664-1
IEC 61984

Details

Crimping tools see chapter 90

Remarks on the crimp technique

The wire gauges mentioned in the catalogue refer to geometric wire gauges of cables.

Number of contacts

2

Identification	Wire cross section (mm²)	Part number male	Part number female	Drawing Dimensions in mm
Han-Modular®, Han-Quintax® module, Crimp terminal 		09 14 002 3001	09 14 002 3101	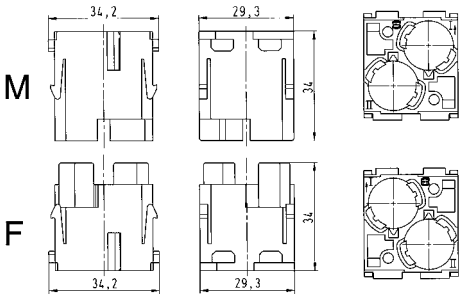 Contact arrangement (view from termination side)
Han D®, Crimp contact, gold plated contacts, contact resistance ≤3 mOhm 	0.14 – 0.37 0.5 0.75 1 1.5 2.5	09 15 000 6124 09 15 000 6123 09 15 000 6125 09 15 000 6122 09 15 000 6121 09 15 000 6126	09 15 000 6224 09 15 000 6223 09 15 000 6225 09 15 000 6222 09 15 000 6221 09 15 000 6226	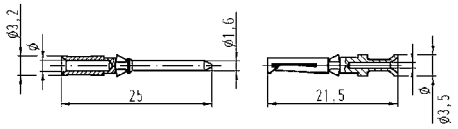 Wire gauge / ø / Stripping length 0.14-0.37 mm² AWG 26-22 / 0.9 mm / 8 mm 0.5 mm² AWG 20 / 1.1 mm / 8 mm 0.75 mm² AWG 18 / 1.3 mm / 8 mm 1 mm² AWG 18 / 1.45 mm / 8 mm 1.5 mm² AWG 16 / 1.75 mm / 8 mm 2.5 mm² AWG 14 / 2.25 mm / 6 mm
Han-Quintax® contact, 4 + shielding, for Han D® crimp contacts Please order crimp contacts separately.		09 15 004 3013	09 15 004 3113	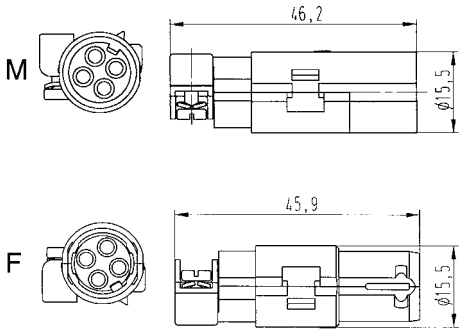
Han-Quintax®, Adapter optional		09 14 000 9915	09 14 000 9915	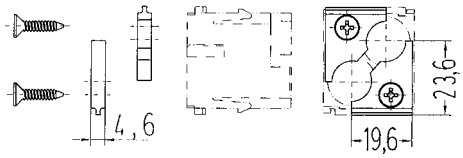

Technical characteristics

Contacts	2
Electrical data acc. to IEC 61984	**5 A 50 V 0.8 kV 3**
Rated current	5 A
Rated voltage	50 V
Rated impulse voltage	0.8 kV
Pollution degree	3
Insulation resistance	≥10^{10} Ohm
Limiting temperatures	-40 °C ... 85 °C
Flammability (insert) acc. to UL 94	V 0

Technical characteristics

Mating cycles	≥500
Material (insert)	polycarbonate
Colour (insert)	RAL 7032 (light grey)
Material (accessories)	metal

Specifications and approvals

IEC 60664-1
IEC 61984

Number of contacts

2

Identification	Wire cross section (mm²)	Part number male	Part number female	Drawing Dimensions in mm
Han-Modular®, Han-Quintax® module, Crimp terminal 		09 14 002 3001	09 14 002 3101	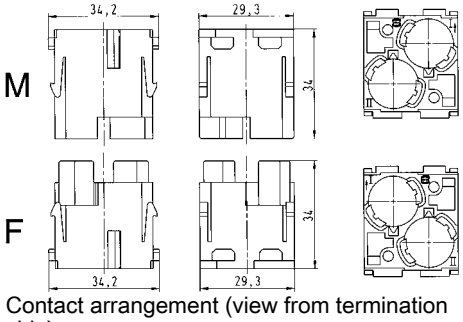 Contact arrangement (view from termination side)
Han-Modular®, Han-Quintax® High Density contact, 8 + shielding, for Han® D-Sub contacts Please order contacts separately.		09 15 008 3013	09 15 008 3113	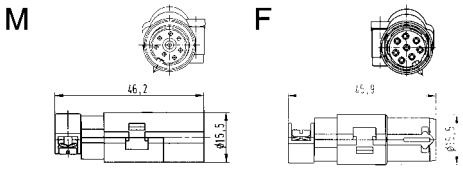
Han-Quintax®, Adapter optional		09 14 000 9915	09 14 000 9915	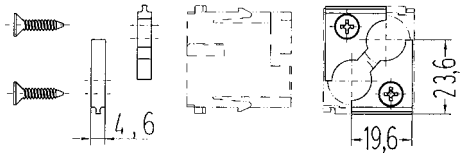
Han® D-Sub crimp contact, turned contacts 	0.09 – 0.25 0.13 – 0.33 0.25 – 0.52	09 67 000 7576 09 67 000 5576 09 67 000 8576	09 67 000 7476 09 67 000 5476 09 67 000 8476	

Wire gauge	max. insulation diameter	Stripping length
0.09-0.25 mm²	1.7	4 mm
0.13-0.33 mm²	1.7	4 mm
0.25-0.52 mm²	1.7	4 mm

Technical characteristics

Contacts	2
Electrical data acc. to IEC 61984	**10 A 50 V 0.8 kV 3**
Rated current	10 A
Rated voltage	50 V
Rated impulse voltage	0.8 kV
Pollution degree	3
Insulation resistance	≥10^{10} Ohm
Limiting temperatures	-40 °C ... 85 °C
Flammability (insert) acc. to UL 94	V 0
Mating cycles	≥500
Material (insert)	polycarbonate, zinc alloy
Colour (insert)	RAL 7032 (light grey)
Material (contact)	copper alloy

Specifications and approvals

IEC 60664-1
IEC 61984

Details

Crimping tools see chapter 90

Remarks on the crimp technique

The wire gauges mentioned in the catalogue refer to geometric wire gauges of cables.

Number of contacts

2

Identification	Wire cross section (mm²)	Part number male	Part number female	Drawing Dimensions in mm
Han-Modular®, Han-Quintax® module, Crimp terminal 		09 14 002 3001	09 14 002 3101	M F 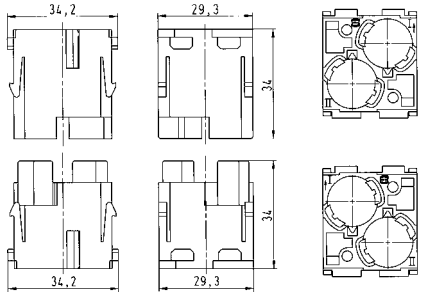 Contact arrangement (view from termination side)
Han D®, Crimp contact, gold plated contacts, contact resistance ≤3 mOhm 	0.14 – 0.37 0.5 0.75 1 1.5 2.5	09 15 000 6124 09 15 000 6123 09 15 000 6125 09 15 000 6122 09 15 000 6121 09 15 000 6126	09 15 000 6224 09 15 000 6223 09 15 000 6225 09 15 000 6222 09 15 000 6221 09 15 000 6226	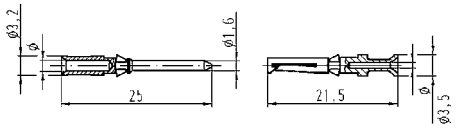 Wire gauge / ⌀ / Stripping length 0.14-0.37 mm² AWG 26-22 / 0.9 mm / 8 mm 0.5 mm² AWG 20 / 1.1 mm / 8 mm 0.75 mm² AWG 18 / 1.3 mm / 8 mm 1 mm² AWG 18 / 1.45 mm / 8 mm 1.5 mm² AWG 16 / 1.75 mm / 8 mm 2.5 mm² AWG 14 / 2.25 mm / 6 mm
Coaxial contact, 1 + shielding, for Han D® crimp contacts, 75 Ohm Please order crimp contacts separately.		09 15 001 3013	09 15 001 3113	M F 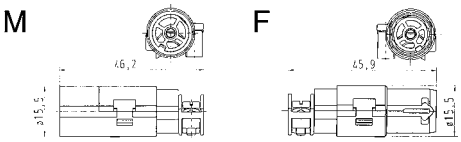 RF transmission characteristics 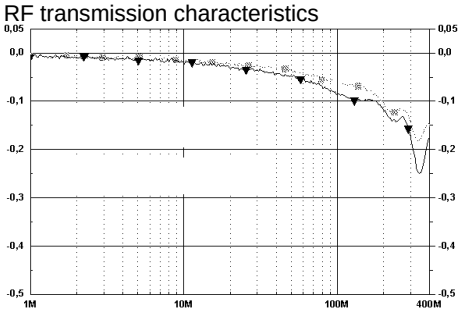 ▩ 75 Ohm cable ▼ 75 Ohm cable with Han D® Coax

Technical characteristics

Contacts	2
Electrical data acc. to IEC 61984	**16 A 50 V 0.8 kV 3**
Rated current	16 A
Rated voltage	50 V
Rated impulse voltage	0.8 kV
Pollution degree	3
Insulation resistance	≥10^{10} Ohm
Limiting temperatures	-40 °C ... 85 °C
Flammability (insert) acc. to UL 94	V 0
Mating cycles	≥500
Material (insert)	polycarbonate, zinc alloy
Colour (insert)	RAL 7032 (light grey)
Material (contact)	copper alloy

Specifications and approvals

IEC 60664-1
IEC 61984

Details

Crimping tools see chapter 90

Remarks on the crimp technique

The wire gauges mentioned in the catalogue refer to geometric wire gauges of cables.

Number of contacts

2

Identification	Wire cross section (mm²)	Part number male	Part number female	Drawing Dimensions in mm
Han-Modular®, Han-Quintax® module, Crimp terminal 		09 14 002 3001	09 14 002 3101	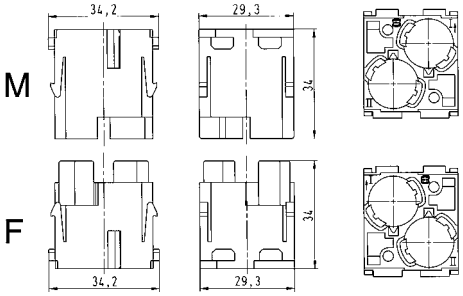 Contact arrangement (view from termination side)
Han E®, Crimp contact, gold plated contacts, contact resistance ≤1 mOhm 	0.14 – 0.37 0.5 0.75 1 1.5 2.5 4 5.5	09 33 000 6117 09 33 000 6122 09 33 000 6115 09 33 000 6118 09 33 000 6116 09 33 000 6123 09 33 000 6119 09 33 000 6139	09 33 000 6217 09 33 000 6222 09 33 000 6215 09 33 000 6218 09 33 000 6216 09 33 000 6223 09 33 000 6221 09 33 000 6239	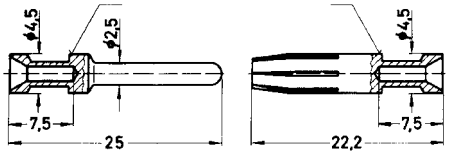 Identification / Wire gauge / Stripping length no groove / 0.14-0.37 mm² / AWG 26-22 / 7.5 mm no groove / 0.5 mm² / AWG 20 / 7.5 mm 1 groove* / 0.75 mm² / AWG 18 / 7.5 mm 1 groove / 1 mm² / AWG 18 / 7.5 mm 2 grooves / 1.5 mm² / AWG 16 / 7.5 mm 3 grooves / 2.5 mm² / AWG 14 / 7.5 mm wide groove / 3 mm² / AWG 12 / 7.5 mm no groove / 4 mm² / AWG 12 / 7.5 mm * on the back crimp collar
Coaxial contact, 1 + shielding, for Han E® crimp contacts, 50 Ohm Please order crimp contacts separately.		09 15 001 3023	09 15 001 3123	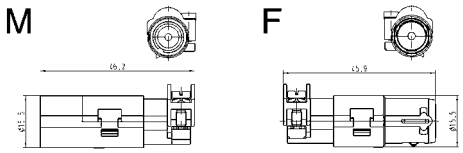 Han E® Coax with RG 213 cable (2.5 mm²) / 200 MHz / 500 MHz / 1.0 GHz / 1.2 GHz / 1.5 GHz / 2.0 GHz / 2.5 GHz Return loss [db] / 23.8 / 21.1 / >18.7 / >17.7 / >16.4 / >14.1 / >12.0 Attenuation [db] / 0:07 / 0.11 / 0.17 / 0.2 / <0.23 / <0.53 / <2.0

Features

- Suitable for FOC and coaxial contacts acc. to EN 41626 / D-Sub

Technical characteristics

Contacts	4, 12
Electrical data acc. to IEC 61984	**50 V**
Rated voltage	50 V
Rated current	1.5 A
Insulation resistance	≥10^{10} Ohm
Limiting temperatures	-40 °C ... 125 °C
Flammability (insert) acc. to UL 94	V 0
Mating cycles	≥500
Material (insert)	polycarbonate
Colour (insert)	RAL 7032 (light grey)
Material (contact)	copper alloy
Insertion loss	<2.5 dB, <1.5 dB

Specifications and approvals

IEC 60664-1
IEC 61984

Details

ATTENTION! Guide pins and bushes are prescribed (see chapter 80).

Number of contacts

4

1.5 A

Identification	Impedance	Part number male	Part number female	Drawing Dimensions in mm
Han-Modular®, Han® Multi module Please order contacts separately.		09 14 004 4501	09 14 004 4512	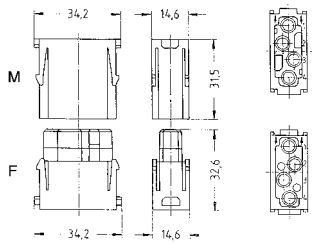 Contact arrangement (view from termination side)
Coaxial contact, Solder / crimp contact, acc. to DIN 41 626, gold plated contacts, contact resistance ≤3 Ohm 	50 Ohm 75 Ohm	09 14 000 6111 09 14 000 6121	09 14 000 6211 09 14 000 6221	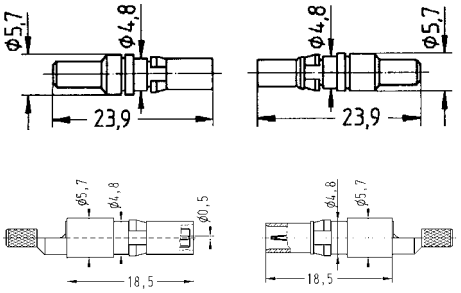 Wires: Shell ø mm; Internal wire ø mm; Dämpfung db/100 m bei 100MHz, 200MHz, 800MHz 50 Ω RG 174 / U: 2.5; 0.48; 84 RG 188 A / U: 2.6; 0.54; 29; 40 RG 316 / U: 2.5; 0.54; 40 75 Ω RG 179 B / U: 2.55; 0.3; 41 RG 187 A / U: 2.7; 0.3; 41
F.O. contact, acc. to DIN 41 626 for 1 mm plastic fibre		20 10 001 4211	20 10 001 4221	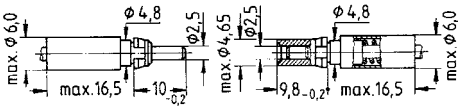
F.O. contact, acc. to DIN 41 626 for GI fibre 50/125 µm or 62.5/125 µm ceramic ferrule		20 10 125 4212	20 10 125 4222	
F.O. contact, acc. to DIN 41 626 for SI fibre (HCS®) 200/230 µm		20 10 230 4211	20 10 230 4221	

Number of contacts

4

1.5 A

Identification	Impedance	Part number male	Part number female	Drawing Dimensions in mm
Han-Modular®, Han® Multi module Please order contacts separately.		09 14 004 4501	09 14 004 4513	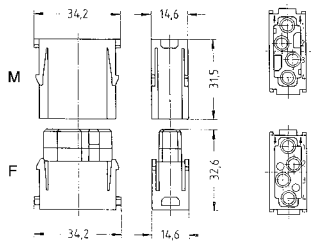 Contact arrangement (view from termination side)
Coaxial contact, Solder / solder contact, acc. to D-Sub, gold plated contacts, contact resistance ≤3 Ohm 	50 Ohm	09 14 000 6215	09 14 000 6115	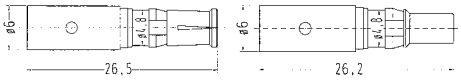
Solder / crimp contact, acc. to D-Sub, gold plated contacts 	50 Ohm 75 Ohm	09 69 281 5140 09 69 281 5141 09 69 281 5143 09 69 281 5230	09 69 181 5140 09 69 181 5141 09 69 181 5143 09 69 181 5230	
Crimp / crimp terminal, acc. to D-Sub, gold plated contacts 	50 Ohm 75 Ohm	09 69 282 5140 09 69 282 5230	09 69 182 5140 09 69 182 5230	

Number of contacts

12

50 V
1.5 A

Identification	Impedance	Part number male	Part number female	Drawing Dimensions in mm
Han-Modular®, Han® Multi module, according to DIN 41 626 Please order contacts separately.		09 14 012 4501	09 14 012 4512	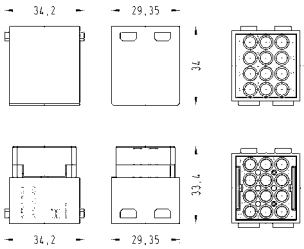 Contact arrangement (view from termination side)
Coaxial contact, Solder / crimp contact, acc. to DIN 41 626, gold plated contacts, contact resistance ≤3 Ohm 	50 Ohm 75 Ohm	09 14 000 6111 09 14 000 6121	09 14 000 6211 09 14 000 6221	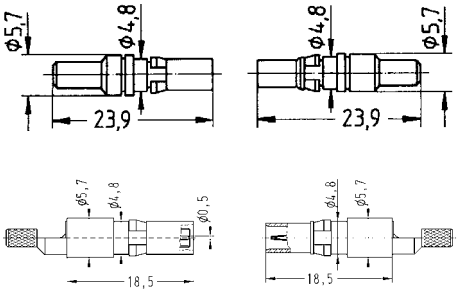 Wires / Shell ∅ mm / Internal wire ∅ mm / Dämpfung db/100 m bei 100MHz, 200MHz, 800MHz 50 Ω: RG 174 / U 2.5 0.48 84; RG 188 A / U 2.6 0.54 29 40; RG 316 / U 2.5 0.54 40 75 Ω: RG 179 B / U 2.55 0.3 41; RG 187 A / U 2.7 0.3 41
F.O. contact, acc. to DIN 41 626 for 1 mm plastic fibre		20 10 001 4211	20 10 001 4221	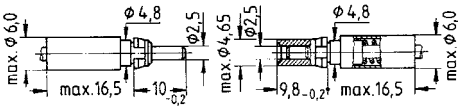
F.O. contact, acc. to DIN 41 626 for GI fibre 50/125 µm or 62.5/125 µm ceramic ferrule		20 10 125 4212	20 10 125 4222	
F.O. contact, acc. to DIN 41 626 for SI fibre (HCS®) 200/230 µm		20 10 230 4211	20 10 230 4221	

Features

- For the transmission of clean and dry compressed air
- Female contacts with / without shut off
- Removal of tubes from pre-assembled pneumatic contacts is possible

Technical characteristics

Contacts	2, 3
Limiting temperatures	-40 °C ... 80 °C
Flammability (insert) acc. to UL 94	V 0
Mating cycles	≥500
Material (insert)	polycarbonate
Colour (insert)	blue
Material (seal)	Buna-N
Material (contact)	delrin acetal
Operating pressure	8 bar / 116 psi

Specifications and approvals

Details

Shut off principle:

In the disconnected position the spring integrated in the female contact is active, thus the O-ring of the valve seals the opening of the air-way. During the mating process, when the defined depth of insertion is reached the male contact presses on the valve head and moves it backwards against the spring tension, so that the air-way opens.

Using of guiding pins in connection with pneumatic modules is imperative.

In addition to this guiding pins guarantee a coding, if pneumatic modules are used exclusively.

Number of contacts

2

Identification	Part number male	Part number female	Drawing Dimensions in mm
Han-Modular®, Han® Pneumatic module 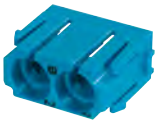 Please order contacts separately. Using of guiding pins is imperative!	09 14 002 4501	09 14 002 4501	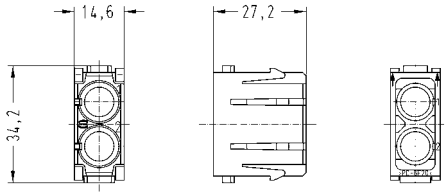 Contact arrangement (view from termination side)
Han-Modular®, Pneumatic contact, without shut off, 6.0 mm / 1/4”	09 14 000 6174	09 14 000 6274	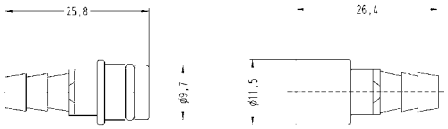 Male contact Female contact
Han-Modular®, Pneumatic contact, with shut off, polypropylen, 6.0 mm / 1/4” 		09 14 000 6279	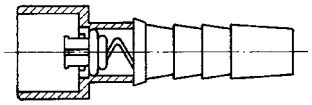 female contact with shut off in closed position

Number of contacts

3

Identification	Part number male	Part number female	Drawing Dimensions in mm
Han-Modular®, Han® Pneumatic module Please order contacts separately. Using of guiding pins is imperative!	09 14 003 4501	09 14 003 4501	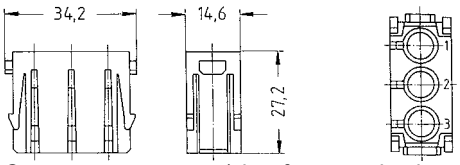 Contact arrangement (view from termination side)
Han-Modular®, Pneumatic contact, without shut off, 1.6 mm / 1/16” 	09 14 000 6151	09 14 000 6251	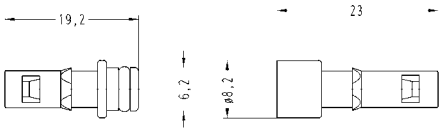 Male contact Female contact
Han-Modular®, Pneumatic contact, without shut off, 3.0 mm 	09 14 000 6152	09 14 000 6252	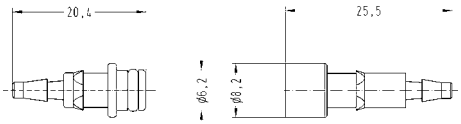
Han-Modular®, Pneumatic contact, without shut off, 4.0 mm / 1/8” 	09 14 000 6153	09 14 000 6253	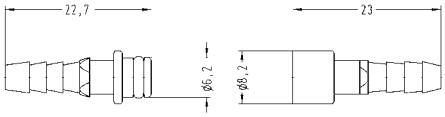
Han-Modular®, Pneumatic contact, with shut off, polypropylen, 1.6 mm / 1/16” 		09 14 000 6256	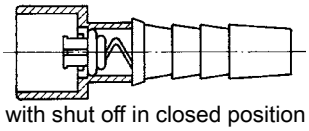 female contact with shut off in closed position
Han-Modular®, Pneumatic contact, with shut off, polypropylen, 3.0 mm		09 14 000 6257	
Han-Modular®, Pneumatic contact, with shut off, polypropylen, 4.0 mm / 1/8”		09 14 000 6258	

Features

- Suitable for HARTING SC contacts
- For GI-Fibre 50 - 62,5 / 125µm

Technical characteristics

Contacts	4
Limiting temperatures	-40 °C ... 85 °C
Flammability (insert) acc. to UL 94	V 0
Mating cycles	≥500
Material (insert)	polycarbonate
Colour (insert)	RAL 7032 (light grey)
Insertion loss	<0.5 dB

Specifications and approvals

Details

Guide pins and bushes are recommended (see chapter 80).

Details

Male module

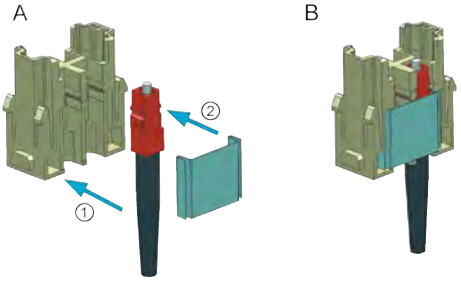

A) Assemble the SC contact
Push the SC contact from the side into the relevant insert ①
Push the fixing plate from the side over the contacts ②
B) SC contact fixed in the module

Female module

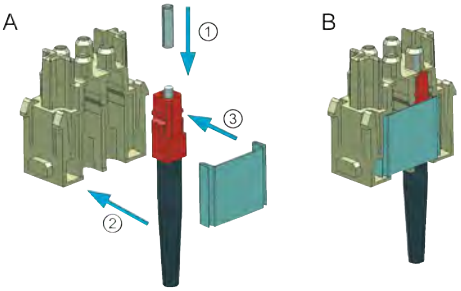

A) Assemble the SC contact
Push the centering ferrule (included in delivery) on the SC contact ①
Push the SC contact from the side into the relevant insert ②
Push the fixing plate from the side over the contacts ③
B) SC contact fixed in the module

Number of contacts

4

Identification	Part number male	Part number female	Drawing Dimensions in mm
Han-Modular®, Han® SC module, for F.O. 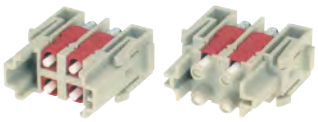 Please order contacts separately.	09 14 004 4701	09 14 004 4711	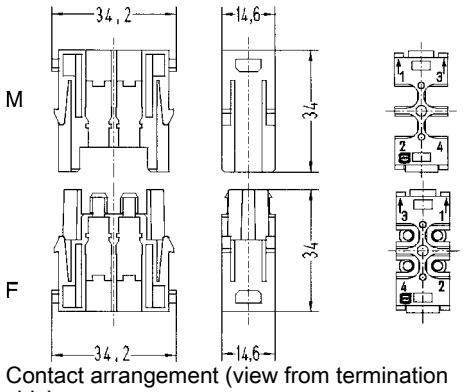 Contact arrangement (view from termination side) The female inserts are equipped with centering ferrules. 4 ferrules are included in delivery range.
SC contact for GI fibre 50/125 µm or 62.5/125 µm ceramic ferrule	20 10 125 5211	20 10 125 5211	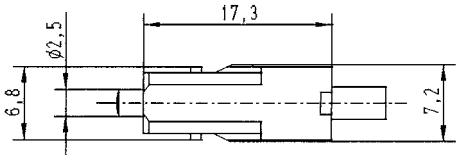
SC contact for SI fibre (HCS®) 200/230 µm	20 10 230 5211	20 10 230 5211	
SC contact, with crimp technique, for 1 mm POF	20 10 001 5211	20 10 001 5211	
SC contact, with quick assembly, for 1 mm POF	20 10 001 5217	20 10 001 5217	
Han-Modular®, Fixing plate, for SC module 	09 14 000 9965	09 14 000 9965	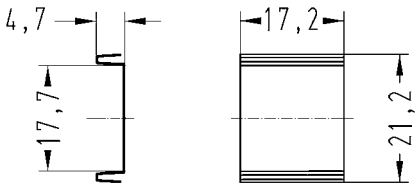

Features

- Suitable for HARTING LC contacts
- For GI-Fibre 50 - 62.5 / 125 µm and for single mode fibre

Technical characteristics

Contacts	6
Limiting temperatures	-40 °C ... 85 °C
Flammability (insert) acc. to UL 94	V 0
Mating cycles	≥500
Material (insert)	polycarbonate
Colour (insert)	RAL 7032 (light grey)

Details

ATTENTION! Guide pins and bushes are prescribed (see chapter 80).

Number of contacts

6

Identification	Part number male	Part number female	Drawing Dimensions in mm
Han-Modular®, Han® LC module, for F.O. Please order contacts separately.	09 14 006 4701	09 14 006 4711	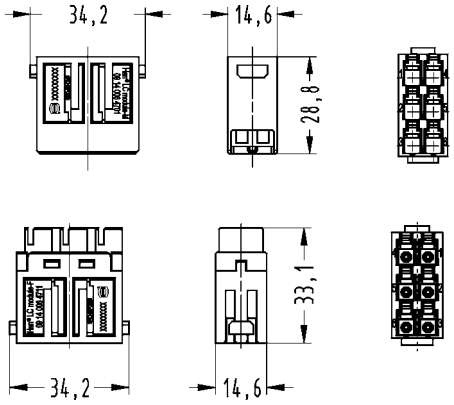
LC contact, for wire gauge up to 3mm max., LWL Multi Mode 	20 10 125 8211	20 10 125 8211	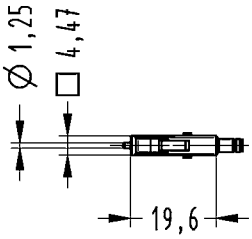
LC contact, for wire gauge up to 2mm, LWL Multi Mode 	20 10 125 8212	20 10 125 8212	
LC contact, for wire gauge up to 3mm max., LWL Single Mode	20 10 125 8220	20 10 125 8220	
LC contact, for wire gauge up to 2mm, LWL Single Mode	20 10 125 8221	20 10 125 8221	

Features

- Pre-leading grounding system according VDE
- Modules can only be assembled polarized
- Alphabetical marking of module position
- High mechanical reliability of modules in case of vibration and impact stress
- No tools necessary to remove modules
- Hinged frames can be used either in hood or housing

Technical characteristics

Limiting temperatures	-40 °C ... 125 °C
Mating cycles	≥500
Mating cycles with HMC connectors	≥10000
Material (hoods/housings)	zinc die-cast

Specifications and approvals

IEC 60664-1
IEC 61984

Details

Both different markings must be used for one connector!

Locking element 09 14 000 9960 see accessories in chapter 06

Wire gauge PE (power side) 4 ... 10 mm²

10 mm² only with ferrule crimp tool 09 99 000 0374 (see chapter 90)

Wire gauge PE (signal side) 1 ... 2.5 mm²

Identification	Part number	Drawing Dimensions in mm
Han-Modular®, Hinged frame, for 2 modules, A ... B	09 14 006 0303	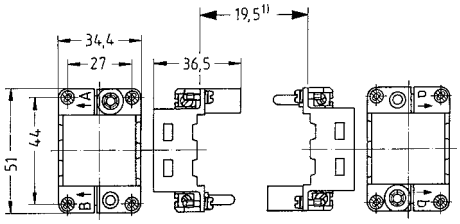 1) Distance max. 20.5 mm
Han-Modular®, Hinged frame, for 2 modules, a ... b	09 14 006 0313	
Han-Modular®, Hinged frame HMC, for 2 modules, A ... B Only with Han® Docking frame.	09 14 206 0303	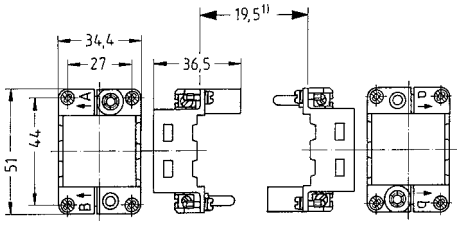 1) Distance max. 20.5 mm
Han-Modular®, Hinged frame HMC, for 2 modules, a ... b Only with Han® Docking frame.	09 14 206 0313	

Identification	Part number	Drawing Dimensions in mm
Han-Modular®, Hinged frame, for 3 modules, A ... C	09 14 010 0303	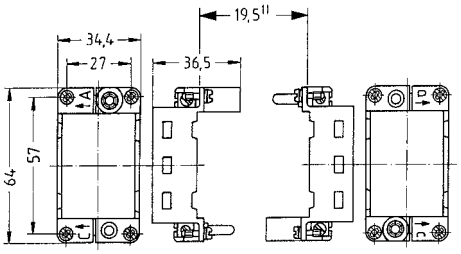 1) Distance max. 20.5 mm
Han-Modular®, Hinged frame, for 3 modules, a ... c	09 14 010 0313	
Han-Modular®, Hinged frame HMC, for 3 modules, A ... C	09 14 210 0303	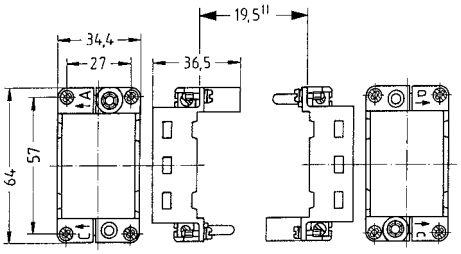 1) Distance max. 20.5 mm
Han-Modular®, Hinged frame HMC, for 3 modules, a ... c	09 14 210 0313	

Identification	Part number	Drawing Dimensions in mm
Han-Modular®, Hinged frame, for 4 modules, A ... D	09 14 016 0303	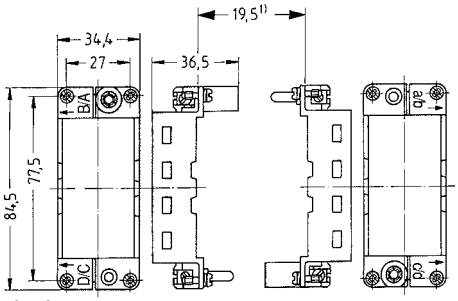 1) Distance max. 20.5 mm
Han-Modular®, Hinged frame, for 4 modules, a ... d	09 14 016 0313	
Han-Modular®, Hinged frame HMC, for 4 modules, A ... D	09 14 216 0303	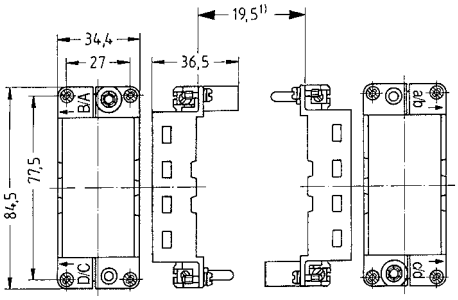 1) Distance max. 20.5 mm
Han-Modular®, Hinged frame HMC, for 4 modules, a ... d	09 14 216 0313	

Identification	Part number	Drawing Dimensions in mm
Han-Modular®, Hinged frame, for 6 modules, A ... F	09 14 024 0303	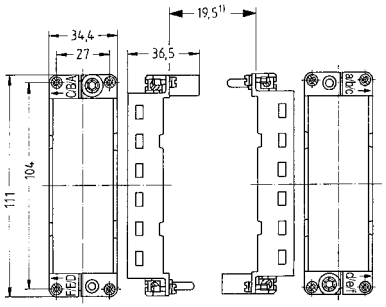 1) Distance max. 20.5 mm
Han-Modular®, Hinged frame, for 6 modules, a ... f	09 14 024 0313	
Han-Modular®, Hinged frame HMC, for 6 modules, A ... F	09 14 224 0303	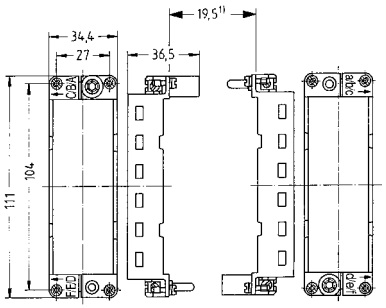 1) Distance max. 20.5 mm
Han-Modular®, Hinged frame HMC, for 6 modules, a ... f	09 14 224 0313	

Features

- Blind mating connector system for drawer systems
- Direct panel mounting without housing
- Very robust design
- Solid pre-leading guide pins and float bushes
- Can be fixed with standard M4 screws
- Suitable for Han-Modular® modules

Technical characteristics

Limiting temperatures	-40 °C ... 125 °C
Flammability (hoods/housings) acc. to UL 94	V 0
Mating cycles	≥500
Mating cycles with HMC connectors	≥10000
Degree of protection acc. to IEC 60529	IP20
Material (accessories)	polycarbonate
Tolerance	±2 mm
Lock-in range	±4 mm

Specifications and approvals

IEC 60664-1
IEC 61984

Details

Due the plastic material used in the docking frame without PE, the panel will need to be grounded separately.

Identification		Part number	Drawing Dimensions in mm
Han-Modular®, Docking frame, float mount, for 2 modules, A ... B		09 14 006 1701	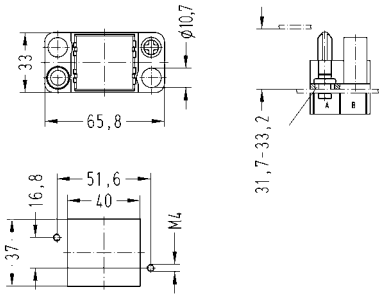 ① floating tolerance ±2 mm Panel cut out
Han-Modular®, Docking frame, fixed, for 2 modules, a ... b		09 14 006 1711	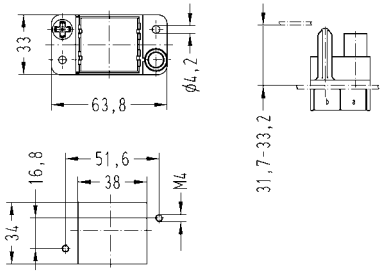 Panel cut out
Han-Modular®, Docking frame, float mount, for 3 modules, A ... C		09 14 010 1701	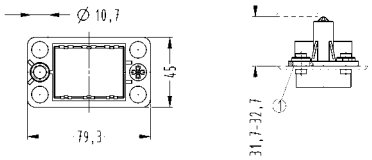 ① floating tolerance ±2 mm
Han-Modular®, Docking frame, fixed, for 3 modules, a ... c		09 14 010 1711	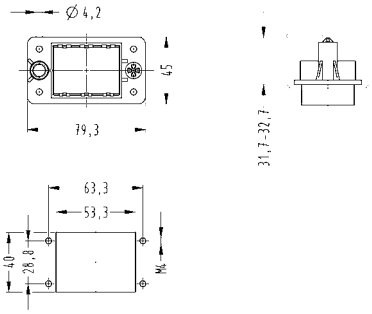 Panel cut out

Identification		Part number	Drawing Dimensions in mm
Han-Modular®, Docking frame, float mount, for 4 modules, A ... D		09 14 016 1701	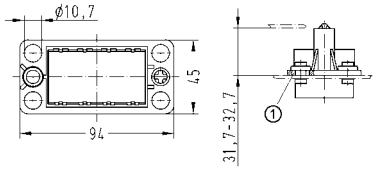 ① floating tolerance ±2 mm 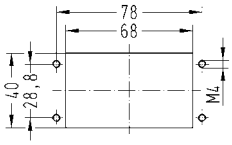 Panel cut out
Han-Modular®, Docking frame, fixed, for 4 modules, a ... d		09 14 016 1711	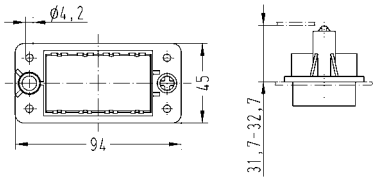 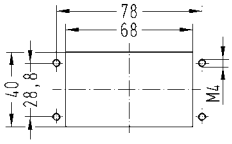 Panel cut out
Han-Modular®, Docking frame, float mount, for 6 modules, A ... F		09 14 024 1701	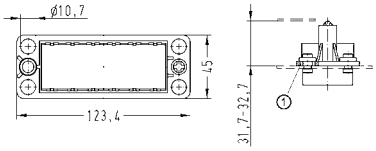 ① floating tolerance ±2 mm 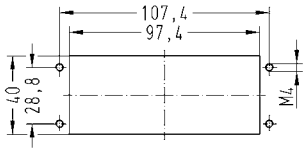 Panel cut out
Han-Modular®, Docking frame, fixed, for 6 modules, a ... f		09 14 024 1711	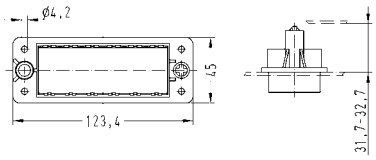 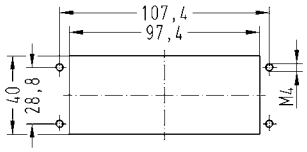 Panel cut out

Identification	Part number	Drawing Dimensions in mm
Han-Modular®, Float washer, zinc die-cast to enable the frame to be float mounted using standard M4 fixing screws	09 14 000 9936	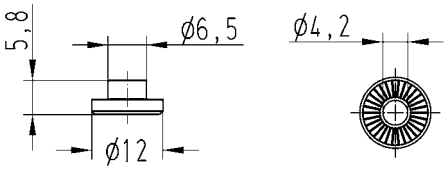

Features

- Robust housing
- Compact design saves space
- Modular structure increases flexibility
- Simple and quick assembly
- Two-part housing

Derating

Current carrying capacity

The current carrying capacity of the connectors is limited by the thermal load capability of the contact element material including the connections and the insulating parts. The derating curve is therefore valid for currents which flow constantly (non-intermittent) through each contact element of the connector evenly, without exceeding the allowed maximum temperature.

Measuring and testing techniques acc. to IEC 60512-5-2

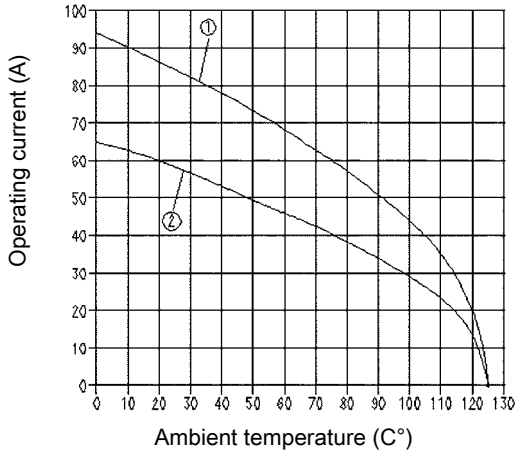

① Han® 40 A Axial module Wire cross section 10 mm²
② Han® C module Wire cross section 6 mm²

Technical characteristics

Limiting temperatures	-40 °C ... 125 °C
Flammability (hoods/housings) acc. to UL 94	V 0
Mating cycles	≥500
Tightening torque	1 Nm
Degree of protection acc. to IEC 60529	IP65 in locked position
Material (hoods/housings)	zinc die-cast
Surface (hoods/housings)	nickel plated
Material (locking lever)	stainless steel
Material (seal)	NBR
Material (screwing)	stainless steel

Details

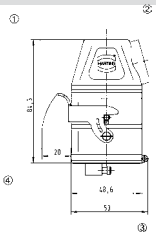

① Hood with side entry
② Cable entry M25
③ Bulkhead mounted housing with locking lever
④ Carrier hood

Identification	Cable entry	Part number	Drawing Dimensions in mm
Han-Modular® Compact, Hoods, top entry Range of delivery: 4 screws are included in the delivery range 	1xM25 1xM32	19 14 001 0401 19 14 001 0402	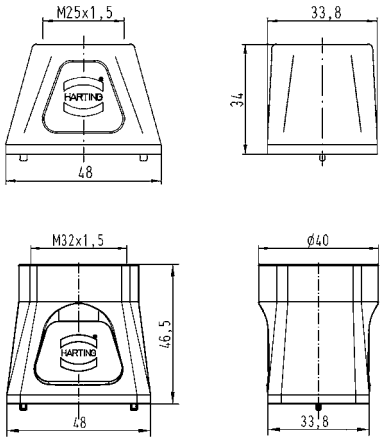
Han-Modular® Compact, Hoods, side entry Range of delivery: 4 screws are included in the delivery range 	1xM25	19 14 001 0501	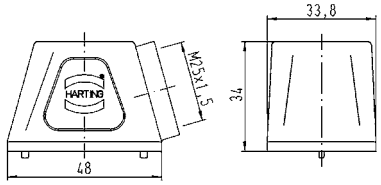
Han-Modular® Compact, Carrier hood 		09 14 001 0311	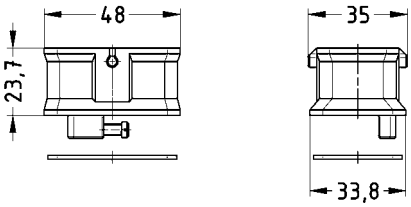 Wire cross section PE contact 10 mm² Stripping length 10 mm Tightening torque 1 Nm
Han-Modular® Compact, Protection covers for carrier hoods, plastic 		09 14 001 5402	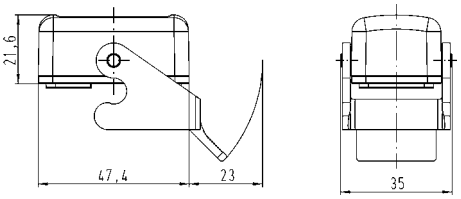

Identification	Part number	Drawing Dimensions in mm
Han-Modular® Compact, Bulkhead mounted housings	09 14 001 0301	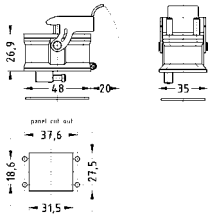 Wire cross section PE contact 10 mm² Stripping length 10 mm Tightening torque 1 Nm
Han-Modular® Compact, Protection cover for bulkhead mounted housings, plastic	09 14 001 5401	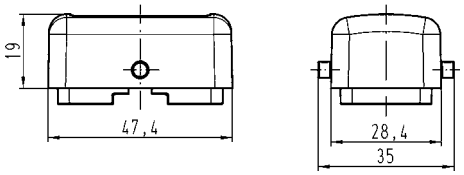
Han-Modular® Compact, Fixing bracket	09 14 000 9947	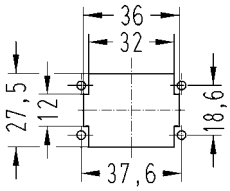 Panel cut out

Han-Modular

Identification	Part number	Drawing Dimensions in mm
Coding element, 1 (red)	09 14 000 9971	
Coding element, 2 (blue)	09 14 000 9972	
Coding element, 3 (black)	09 14 000 9973	
Coding element, 4 (yellow)	09 14 000 9974	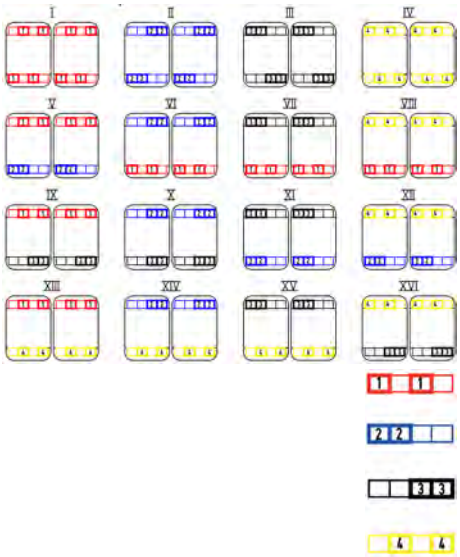

Features

- Robust housing
- Compact design saves space
- Modular structure increases flexibility
- Simple and quick assembly
- Two-part housing

Technical characteristics

Limiting temperatures	-40 °C ... 125 °C
Mating cycles	≥500
Tightening torque	1 Nm
Degree of protection acc. to IEC 60529	IP65
Material (hoods/housings)	aluminium
Surface (hoods/housings)	powder-coated
Colour (hoods/housings)	RAL 7037 (grey)
Material (locking lever)	polycarbonate + stainless steel
Colour (locking lever)	RAL 7037 (grey)
Material (seal)	NBR

Details

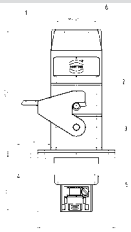

① Hood with top entry
② Carrier hood
③ Bulkhead mounted housing with locking lever
④ Switch board panel
⑤ Panel feed through housings
⑥ Cable entry

Identification	Cable entry	Part number	Drawing Dimensions in mm
Han-Modular® Twin, Hoods, top entry, screw locking	1xM20 1xM25 1xM32	19 14 002 0400 19 14 002 0401 19 14 002 0402	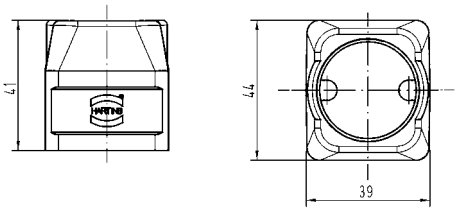
Han-Modular® Twin, Hoods, side entry, screw locking	1xM25	19 14 002 0501	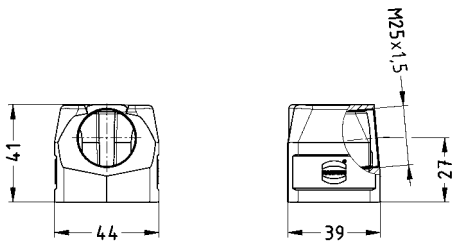
Han-Modular® Twin, Carrier hood, Han-Easy Lock®		09 14 002 0311	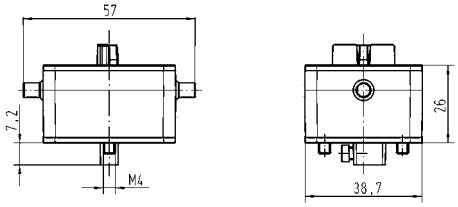 Wire cross section PE contact 10 mm² Stripping length 10 mm Tightening torque 1 Nm
Han-Modular® Twin, shielded frame, zinc die-cast		09 14 000 9924	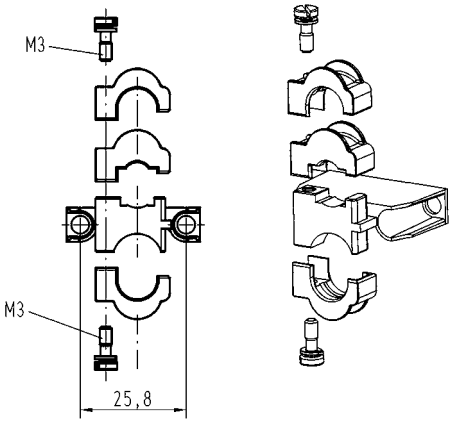

double locking lever

Identification	Part number	Drawing Dimensions in mm
Han-Modular® Twin, Bulkhead mounted housings, Han-Easy Lock®	09 14 002 0301	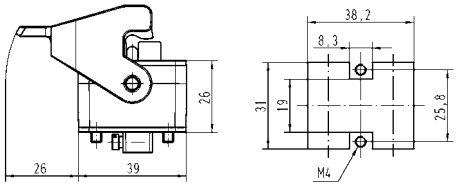 Wire cross section PE contact 10 mm² Stripping length 10 mm Tightening torque 1 Nm
Han-Modular® Twin, Protection cover for bulkhead mounted housings, metal, closed	09 14 002 5401	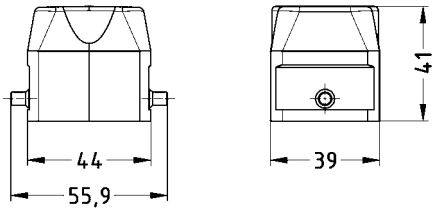
Han-Modular® Twin, Panel feed through housings, zinc die-cast, screw locking	09 14 000 9928	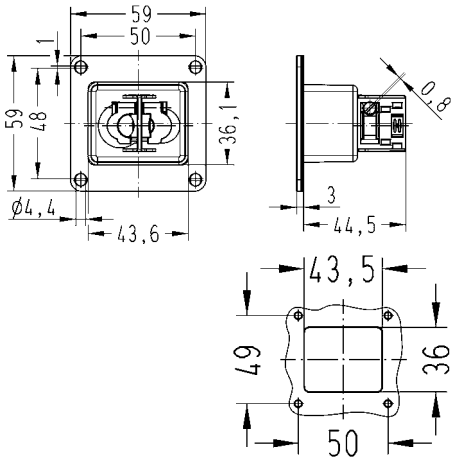 Panel cut out

Features

- Suitable for all Han-Modular® single modules
- The variant with PE connection uses pin 1 of the module as PE
- Slim, space saving design
- Low cost plastic hoods and housings

Technical characteristics

Limiting temperatures	-40 °C ... 85 °C
Flammability (hoods/housings) acc. to UL 94	V 0
Mating cycles	≥500
Degree of protection acc. to IEC 60529	IP20, IP65
Material (hoods/housings)	polycarbonate
Colour (hoods/housings)	RAL 7037 (grey)
Material (seal)	NBR

Specifications and approvals

IEC 60664-1
IEC 61984

Identification	Clamping range (mm)	Part number	Drawing Dimensions in mm
Han-Modular® ECO, Hoods, IP20, top entry, Han-Snap® locking, without PE 	... 14.65	09 14 001 0422	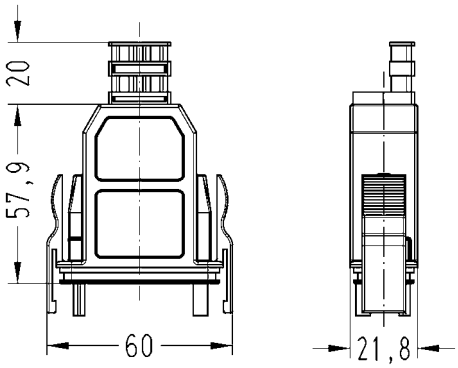
Han-Modular® ECO, Hoods, IP65, top entry, Han-Snap® locking, without PE 	6 ... 13	09 14 001 0420	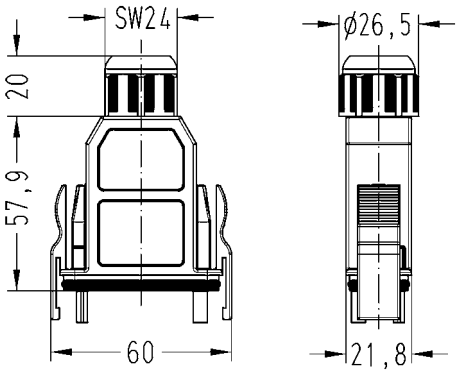
Han-Modular® ECO, Bulkhead mounted housings, top entry, Han-Snap® locking, without PE 		09 14 001 0320	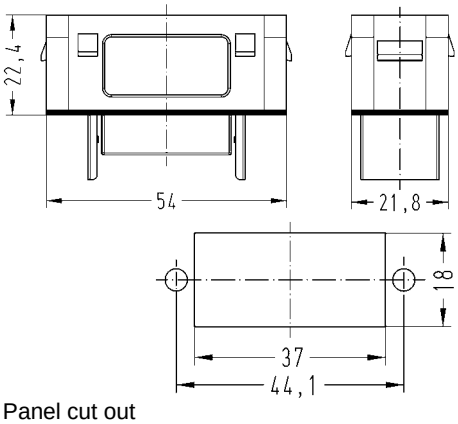 Panel cut out

Identification	Clamping range (mm)	Part number	Drawing Dimensions in mm
Han-Modular® ECO, Cable to cable housings, IP20, top entry, Han-Snap® locking, without PE 	... 14.65	09 14 001 0722	
Han-Modular® ECO, Cable to cable housings, IP65, top entry, Han-Snap® locking, without PE 	6 ... 13	09 14 001 0720	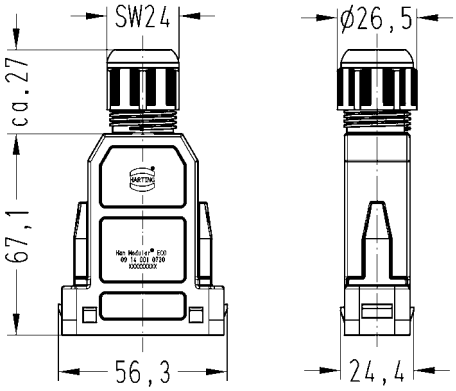
Han-Modular®, Coding element Range of delivery: 8 pieces per frame 		09 14 000 9929	

Identification	Clamping range (mm)	Part number	Drawing Dimensions in mm
Han-Modular® ECO, Hoods, IP20, top entry, Han-Snap® locking, with PE marking (pin 1 = PE) 	... 14.65	09 14 001 0423	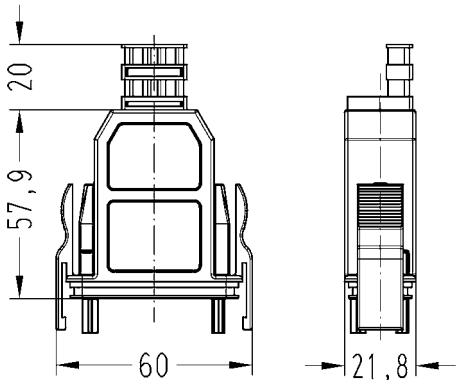
Han-Modular® ECO, Hoods, IP65, top entry, Han-Snap® locking, with PE marking (pin 1 = PE) 	6 ... 13	09 14 001 0421	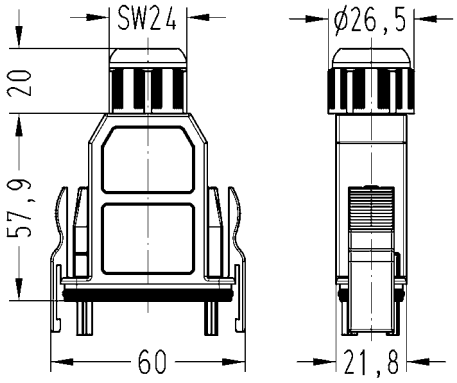
Han-Modular® ECO, Bulkhead mounted housings, top entry, Han-Snap® locking, with PE marking (pin 1 = PE) 		09 14 001 0321	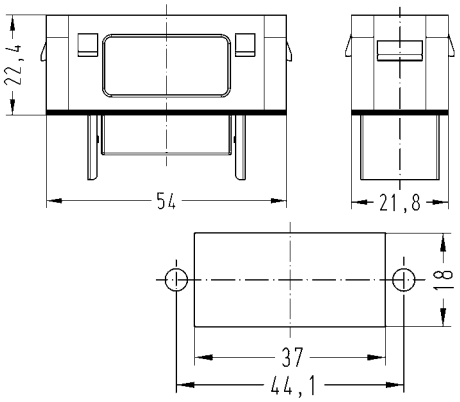 Panel cut out

Identification	Clamping range (mm)	Part number	Drawing Dimensions in mm
Han-Modular® ECO, Cable to cable housings, IP20, top entry, Han-Snap® locking, with PE marking (pin 1 = PE) 	... 14.65	09 14 001 0723	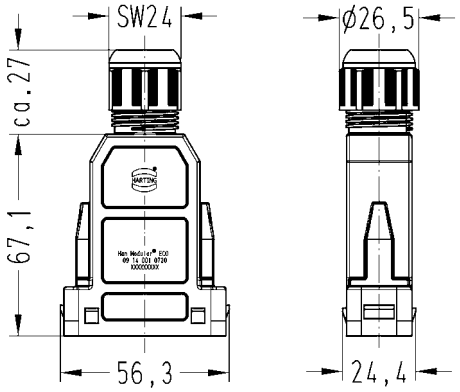
Han-Modular® ECO, Cable to cable housings, IP65, top entry, Han-Snap® locking, with PE marking (pin 1 = PE) 	6 ... 13	09 14 001 0721	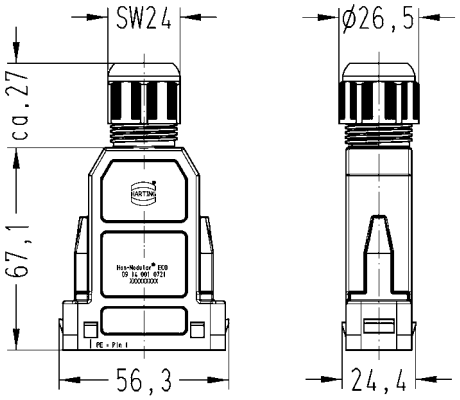
Han-Modular®, Coding element Range of delivery: 8 pieces per frame 		09 14 000 9929	

Identification	Wire cross section (mm²)	Part number	Drawing Dimensions in mm
Han-Modular®, Han® Dummy module 		09 14 000 9950	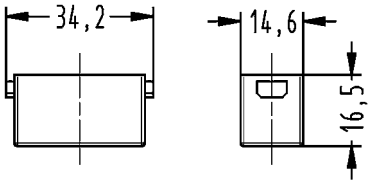
Han-Modular®, Cable shoe, for PE extension for hoods/housings high construction only	16	09 14 000 9912	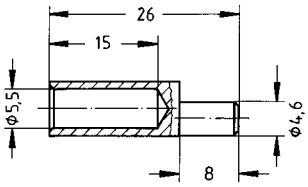 Please use pressing tools for non-insulated cable shoes
Han-Modular®, fixing, for Han-Modular® hinged frames Range of delivery: 20 pieces per frame 		09 14 000 9960	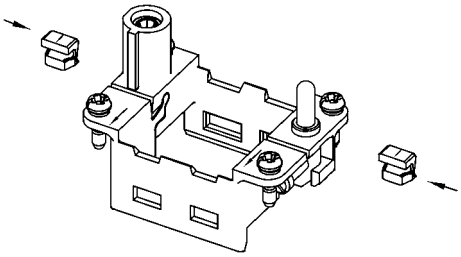 Ideal to pre-assemble the hinged frames
Han-Modular®, Module locking, with strain relief Range of delivery: 1 Module clamp 		09 14 000 0312	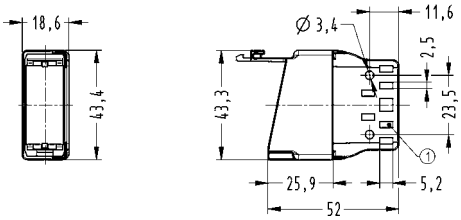 ① For cable ties with max. 5 mm width

Identification	Wire cross section (mm²)	Part number	Drawing Dimensions in mm
Han-Modular®, Module locking, for rail Range of delivery: 1 Module clamp		09 14 000 0313	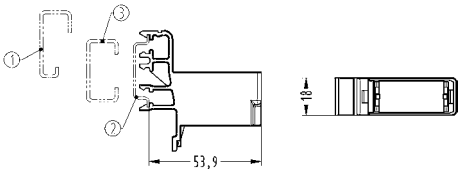 ① G-rail IEC 60715-G32 ② rail IEC 60715-35 x 7.5 with 1 mm thickness or -35 x 15 with 1.5 mm thickness ③ C-rail IEC 60715-C30
Han-Modular®, Frame, for 1 module, in housing Han® 10 A		09 14 000 0304	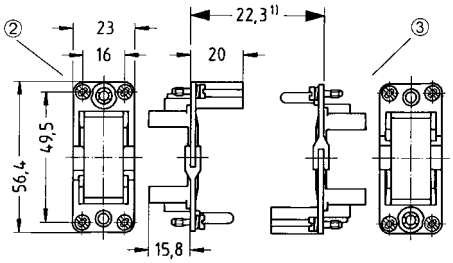 1 distance max. 23.5 mm 2 hoods 3 housings

Contents | Page

Han® HsB..... **07.2**

Features

- Screw termination with wire protection
- Suitable for power supply applications
- Termination with standard screw driver

Derating

Current carrying capacity

The current carrying capacity of the connectors is limited by the thermal load capability of the contact element material including the connections and the insulating parts. The derating curve is therefore valid for currents which flow constantly (non-intermittent) through each contact element of the connector evenly, without exceeding the allowed maximum temperature.

Measuring and testing techniques acc. to IEC 60512-5-2

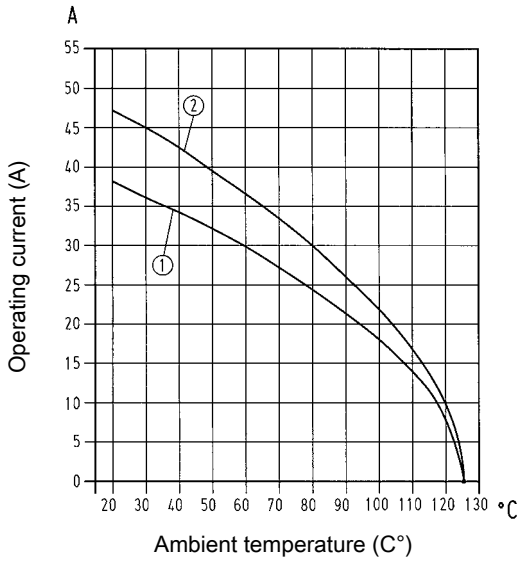

① Wire cross section 4 mm²
② Wire cross section 6 mm²

Technical characteristics

Contacts	6, 12
Electrical data acc. to IEC 61984	**35 A 400/690 V 6 kV 3**
Rated current	35 A
Rated voltage conductor - ground	400 V
Rated voltage conductor - conductor	690 V
Rated impulse voltage	6 kV
Pollution degree	3
alternative electrical data	**35 A 500 V 6 kV 3**
Rated voltage acc. to UL	600 V
Rated voltage acc. to CSA	600 V
Insulation resistance	≥10^{10} Ohm
Limiting temperatures	-40 °C ... 125 °C
Flammability (insert) acc. to UL 94	V 0
Mating cycles	≥500
Material (insert)	polycarbonate
Colour (insert)	RAL 7032 (light grey)
Material (contact)	copper alloy

Specifications and approvals

IEC 60664-1
IEC 61984

Number of contacts

6+ ⏚

400/690 V
35 A

Identification	Wire cross section (mm²)	Part number male	Part number female	Drawing Dimensions in mm
Han® HsB, Screw terminal, silver plated contacts, contact resistance ≤1 mOhm 	1.5 – 6	09 31 006 2601	09 31 006 2701	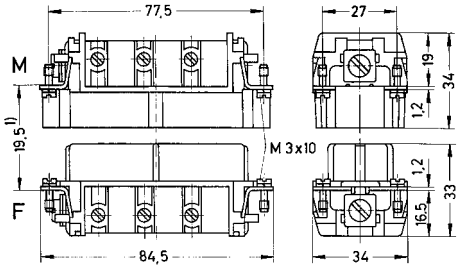 1) Distance for contact max. 21 mm Tightening torque axial screw 1.2 Nm 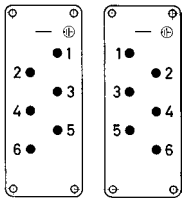 Contact arrangement (view from termination side) 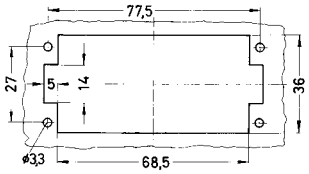 Panel cut out for inserts for use without hoods/housings

Number of contacts

12+ ⏚

400/690 V
35 A

Identification	Wire cross section (mm²)	Part number male	Part number female	Drawing Dimensions in mm
Han® HsB, Screw terminal, 1 - 6, silver plated contacts, contact resistance ≤1 mOhm 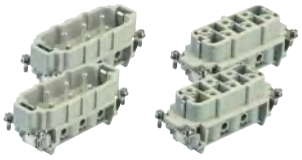 Please order two inserts for a complete assembly!	1.5 – 6	09 31 006 2601	09 31 006 2701	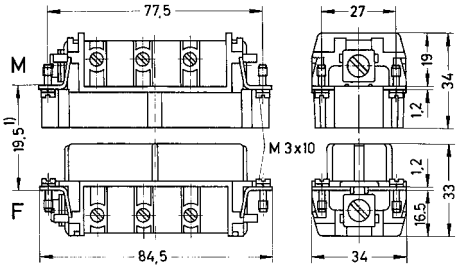 1) Distance for contact max. 21 mm Tightening torque axial screw 1.2 Nm
Han® HsB, Screw terminal, 7 - 12, silver plated contacts, contact resistance ≤1 mOhm 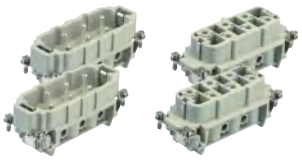 Please order two inserts for a complete assembly!	1.5 – 6	09 31 006 2611	09 31 006 2711	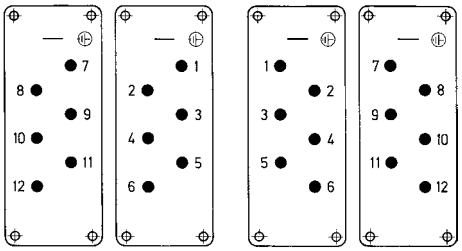 Contact arrangement (view from termination side) 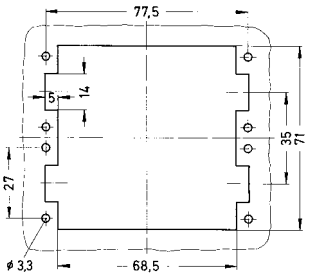 Panel cut out for inserts for use without hoods/housings

Contents | Page

Han D® AV	**08.4**
Han D® AV Distributor	**08.9**
Han E® AV.....	**08.11**
Han® ES AV	**08.20**
Accessories	**08.25**

Possibilities in switch cabinet

Left or right hand mounting in the switch cabinet, therefore allows use of the same pre-prepared interface cable

Internal use on standard rails in the switch cabinet in conjunction with Han-Snap®

Distributor lockable on standard rails or mountable at terminal block connector Han D® AV

The terminal block connectors can be supplied for left hand or right hand applications. Hence the ground and connecting terminal for contact no. 1 will always be accessible from above in both types of installation.

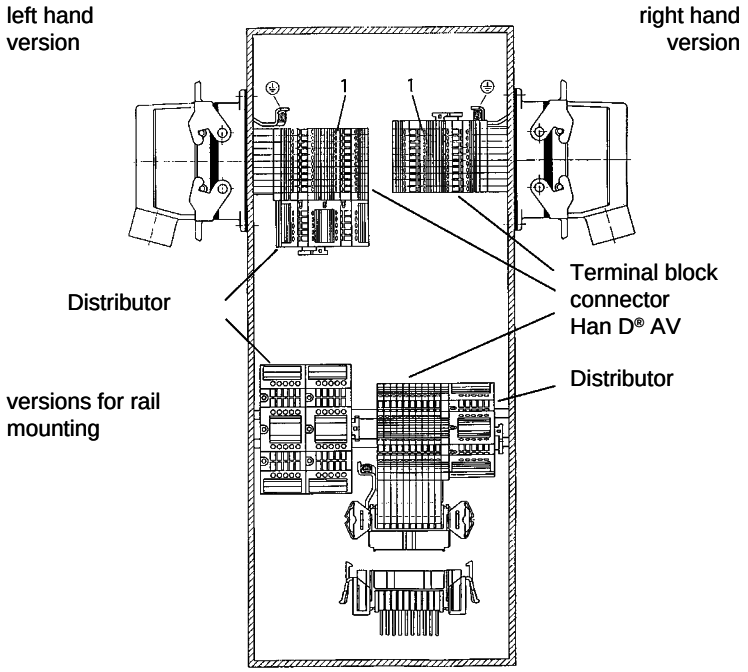

Assembly of terminal block connectors

Terminal block connectors can be mounted from the inside of the switch cabinet into standard bulkhead housings. Therefore pre-assembly is possible.

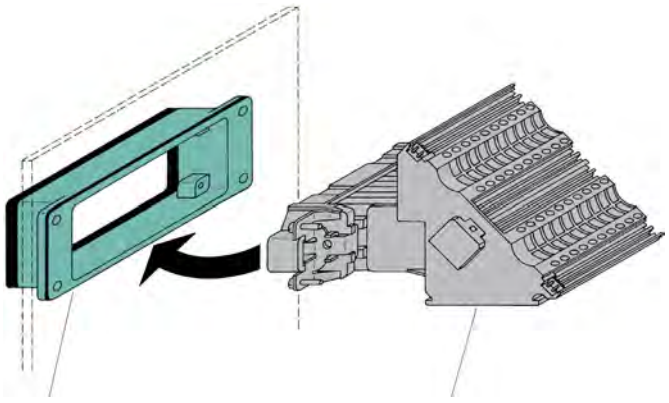

Identification

The individual terminals have the same identification as on the mating face. In addition each circuit may be separately labelled with identification strips fitted in the adjacent slots.

Counterparts

For suitable mating inserts of serie Han D® with crimp terminal please refer to the chapter 02.

Possibilities in switch cabinet

Left or right hand mounting in the switch cabinet, therefore allows use of the same pre-prepared interface cable

Internal use on standard rails in the switch cabinet in conjunction with Han-Snap®

The terminal block connectors can be supplied for left hand or right hand applications. Hence the ground and connecting terminal for contact no. 1 will always be accessible from above in both types of installation.

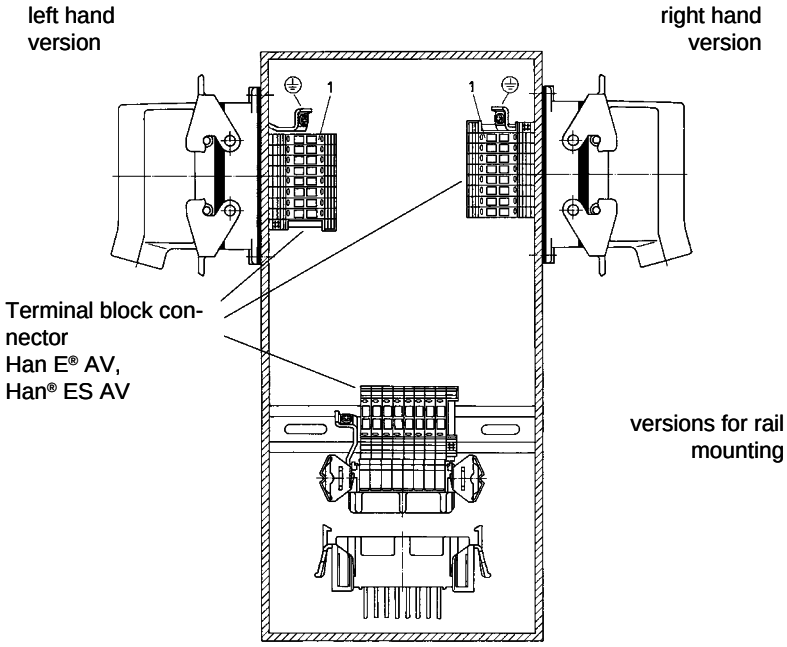

Assembly of terminal block connectors

The terminal block connector is fixed in the standard bulkhead housing in the normal way.

Han E® AV and Han® ES AV with 16 and 24 pins can be mounted from the inside of the switch cabinet into standard bulkhead housings. Therefore pre-assembly is possible.

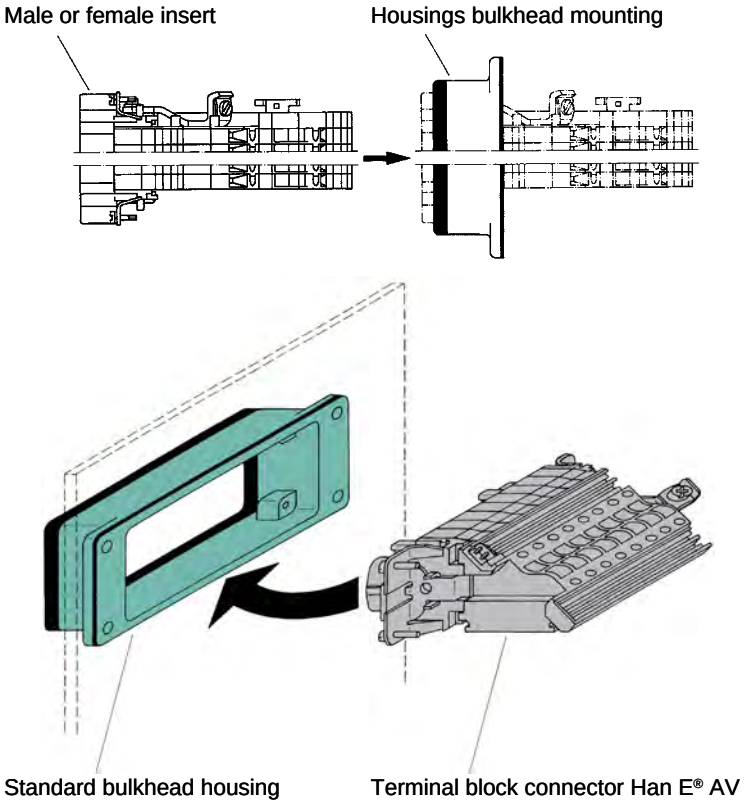

Identification

The individual terminals have the same identification as on the mating face. In addition each circuit may be separately labelled with identification strips fitted in the adjacent slots.

Counterparts

For suitable mating inserts of series Han E® and Han® ES with screw, cage-clamp or crimp terminals please refer to the chapter 03.

Features

- For left or right hand applications available
- PE and connecting terminal for contact no.1 are at the top in both types of installation
- Mountable in standard bulkhead housing and on standard rails by using of fixing elements
- Screw termination with wire protection

Derating

Current carrying capacity

The current carrying capacity of the connectors is limited by the thermal load capability of the contact element material including the connections and the insulating parts. The derating curve is therefore valid for currents which flow constantly (non-intermittent) through each contact element of the connector evenly, without exceeding the allowed maximum temperature.

Measuring and testing techniques acc. to IEC 60512-5-2

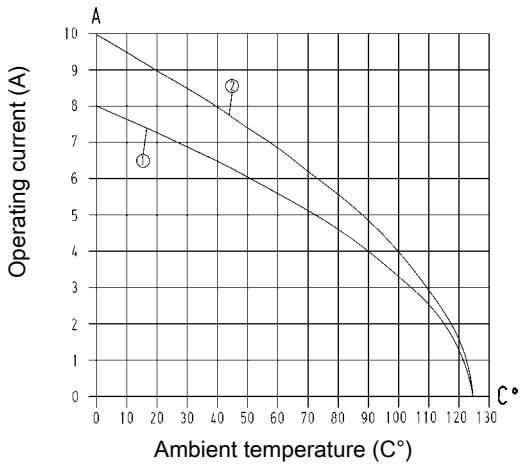

① Han® 40 D AV Wire cross section 0.75 mm²
② Han® 40 D AV Wire cross section 1.5 mm²

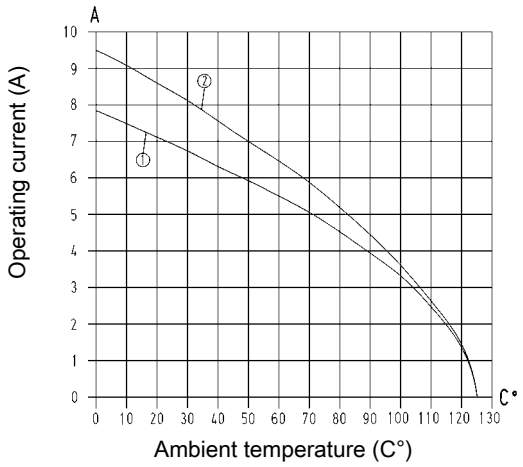

① Han® 64 D AV Wire cross section 0.75 mm²
② Han® 64 D AV Wire cross section 1.5 mm²

Technical characteristics

Contacts	40, 64
Electrical data acc. to IEC 61984	**10 A 250 V 4 kV 3**
Rated current	10 A
Rated voltage	250 V
Rated impulse voltage	4 kV
Pollution degree	3
Rated voltage acc. to UL	600 V
Insulation resistance	≥10^{10} Ohm
Limiting temperatures	-40 °C ... 125 °C
Flammability (insert) acc. to UL 94	V 0
Mating cycles	≥500
Tightening torque	0.5 Nm
Material (insert)	polycarbonate
Colour (insert)	RAL 7032 (light grey)
Material (contact)	copper alloy

Specifications and approvals

IEC 60664-1
IEC 61984

Details

Hoods/Housings see chapter 31

Identification strips

Multi contour (MK) the following identification strips may be used

- HARTING – 09 21 000 9971
- Murrplastik – KPX 5/10-5
- Weidmüller – DEK 5
- Phoenix – 4 K – DST 5
- Phoenix – DS 5
- Phoenix – ZB 5
- WAGO – WSB 5

Single contour (SK) the following identification strips may be used

- Murrplastik – KWI 5/10
- Murrplastik – KWI 5/10-5
- Murrplastik – KWI 8.6-5
- Wieland – 9705 A 5/10
- WAGO – Mini - WSB

Identification

The individual terminals have the same identification as on the mating face. In addition each circuit may be separately labelled with identification strips fitted in the adjacent slots.

Number of contacts

40+ ⏚

250 V
10 A

Identification	Wire cross section (mm²)	Part number male	Part number female	Drawing Dimensions in mm
Terminal Block Connectors, Screw terminal, Left hand version, Multi contour (MK), silver plated contacts, contact resistance ≤4 mOhm 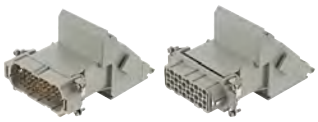	0.2 – 2.5	09 21 040 4601	09 21 040 4701	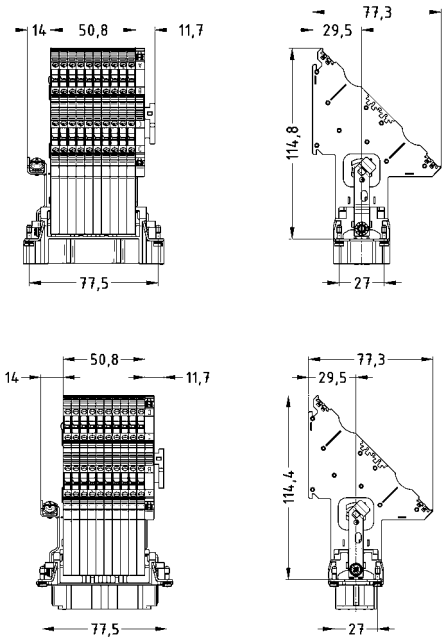
Terminal Block Connectors, Screw terminal, Left hand version, Single contour (SK), silver plated contacts, contact resistance ≤4 mOhm 	0.2 – 2.5	09 21 040 4602	09 21 040 4702	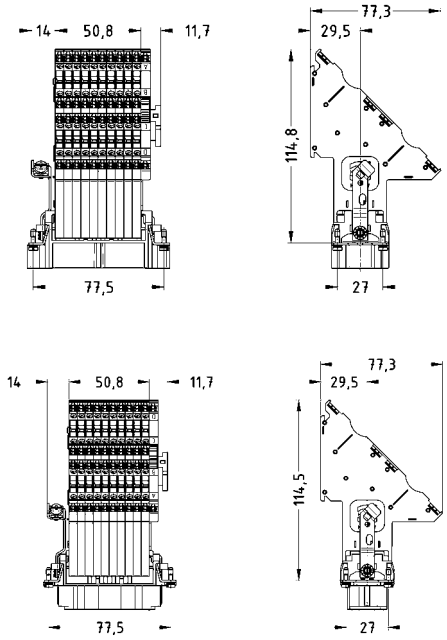

Han AV

Identification	Wire cross section (mm²)	Part number male	Part number female	Drawing Dimensions in mm
Terminal Block Connectors, Screw terminal, Right hand version, Multi contour (MK), silver plated contacts, contact resistance ≤4 mOhm 	0.2 – 2.5	09 21 040 4611	09 21 040 4711	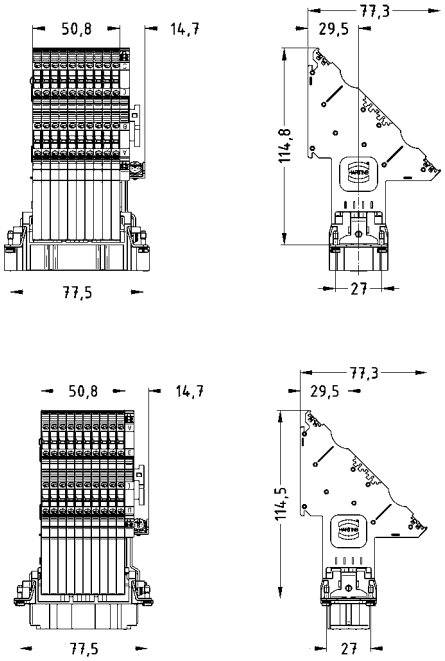
Terminal Block Connectors, Screw terminal, Right hand version, Single contour (SK), silver plated contacts, contact resistance ≤4 mOhm 	0.2 – 2.5	09 21 040 4612	09 21 040 4712	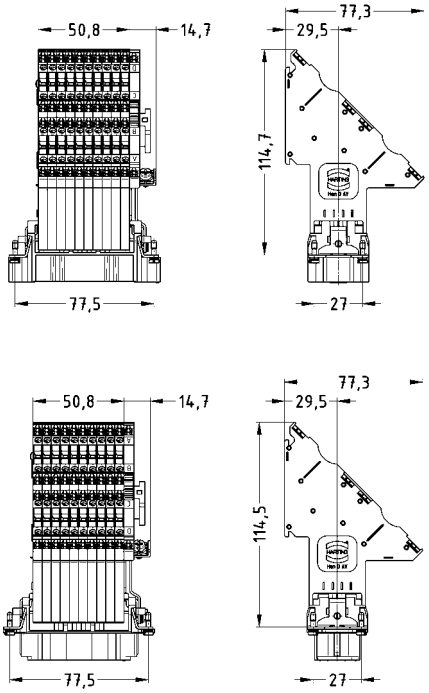

Number of contacts

64+ ⏚

250 V
10 A

Identification	Wire cross section (mm²)	Part number male	Part number female	Drawing Dimensions in mm
Terminal Block Connectors, Screw terminal, Left hand version, Multi contour (MK), silver plated contacts, contact resistance ≤4 mOhm 	0.2 – 2.5	09 21 064 4601	09 21 064 4701	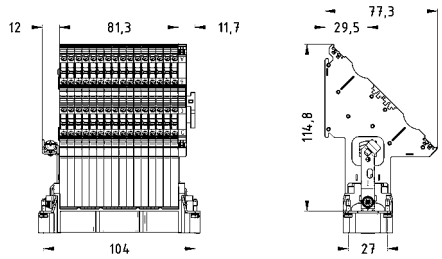 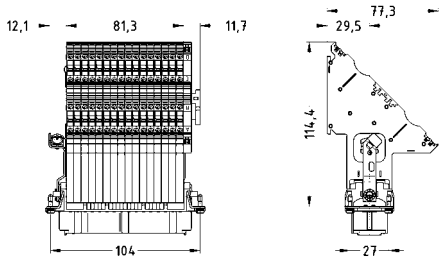
Terminal Block Connectors, Screw terminal, Left hand version, Single contour (SK), silver plated contacts, contact resistance ≤4 mOhm 	0.2 – 2.5	09 21 064 4602	09 21 064 4702	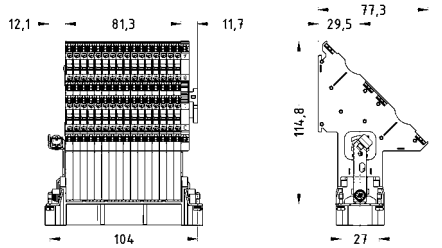 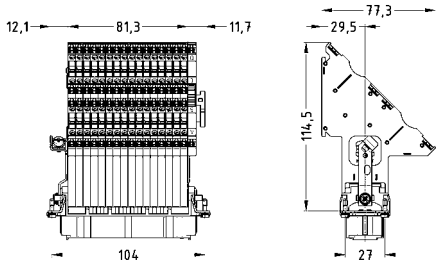

Identification	Wire cross section (mm²)	Part number male	Part number female	Drawing Dimensions in mm
Terminal Block Connectors, Screw terminal, Right hand version, Multi contour (MK), silver plated contacts, contact resistance ≤4 mOhm 	0.2 – 2.5	09 21 064 4611	09 21 064 4711	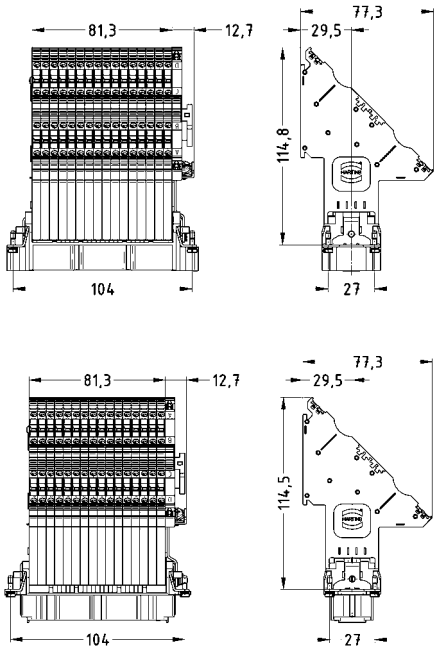
Terminal Block Connectors, Screw terminal, Right hand version, Single contour (SK), silver plated contacts, contact resistance ≤4 mOhm 	0.2 – 2.5	09 21 064 4612	09 21 064 4712	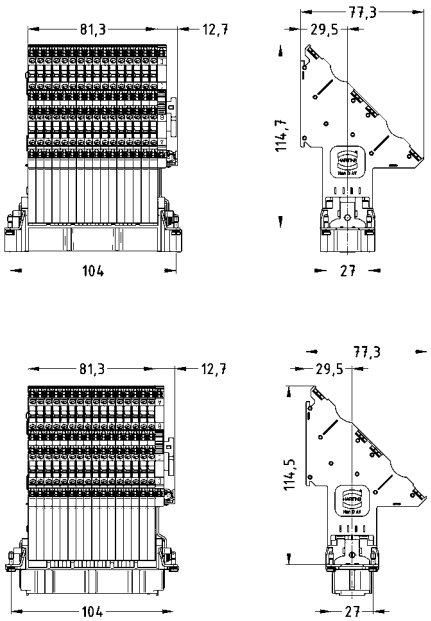

Features

- Easy mounting direct adjacent to terminal block connector Han D® AV
- By using of fixing elements mountable on standard rails
- Screw termination with wire protection

Technical characteristics

Electrical data acc. to IEC 61984	**16 A 400/690 V 6 kV 3**
Rated current	16 A
Rated voltage conductor - ground	400 V
Rated voltage conductor - conductor	690 V
Rated impulse voltage	6 kV
Pollution degree	3
Rated voltage acc. to UL	600 V
Insulation resistance	≥10^{10} Ohm
Limiting temperatures	-40 °C ... 125 °C
Flammability (insert) acc. to UL 94	V 0
Mating cycles	≥500
Tightening torque	0.5 Nm
Material (insert)	polycarbonate
Colour (insert)	RAL 7032 (light grey)
Material (contact)	copper alloy

Specifications and approvals

IEC 60664-1
IEC 61984

Details

Identification strips

the following identification strips may be used

- HARTING – 09 21 000 9971
- Murrplastik – KPX 5/10-5
- Phoenix – 4 K – DST 5
- Phoenix – ZB 5
- Phoenix – DS 5

Identification

The individual terminals have the same identification as on the mating face. In addition each circuit may be separately labelled with identification strips fitted in the adjacent slots.

Mounting example

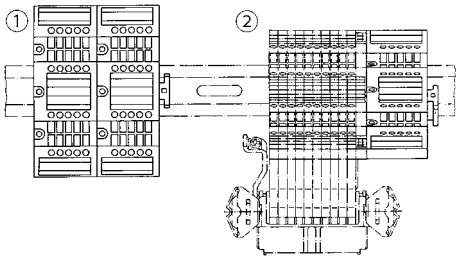

① Distributor on standard rail
② Distributor with teminal block connector Han D® AV

Han D® AV Distributor

400/690 V
16 A

Identification	Terminals	Wire cross section (mm²)	Part number	Drawing Dimensions in mm
Distributor, Screw terminal, tin plated contacts optionally mountable to terminal block connectors	20 4x4 2x10	0.2 – 2.5 0.2 – 2.5 0.2 – 2.5	09 42 020 0111 09 42 020 0131 09 42 020 0121	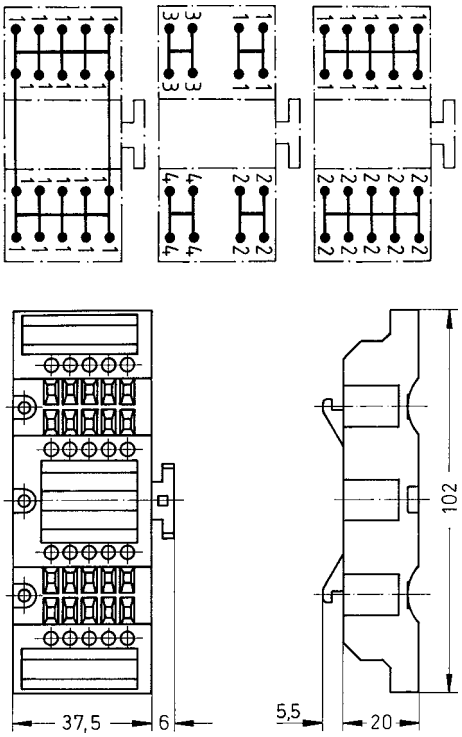

Han AV

Features

- For left or right hand applications available
- PE and connecting terminal for contact no.1 are at the top in both types of installation
- Mountable in standard bulkhead housing and on standard rails by using of fixing elements
- Screw termination with wire protection

Derating

Current carrying capacity

The current carrying capacity of the connectors is limited by the thermal load capability of the contact element material including the connections and the insulating parts. The derating curve is therefore valid for currents which flow constantly (non-intermittent) through each contact element of the connector evenly, without exceeding the allowed maximum temperature.

Measuring and testing techniques acc. to IEC 60512-5-2

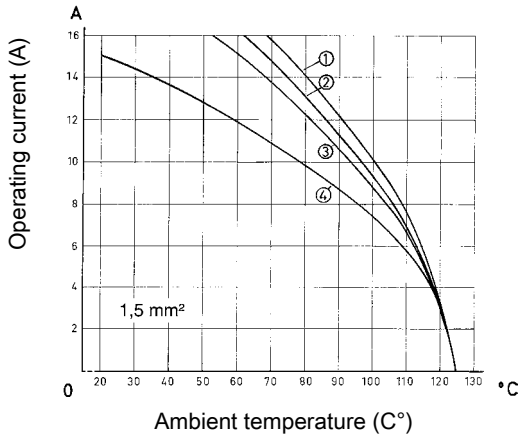

① Han® 6 E AV
② Han® 10 E AV
③ Han® 16 E AV
④ Han® 24 E AV

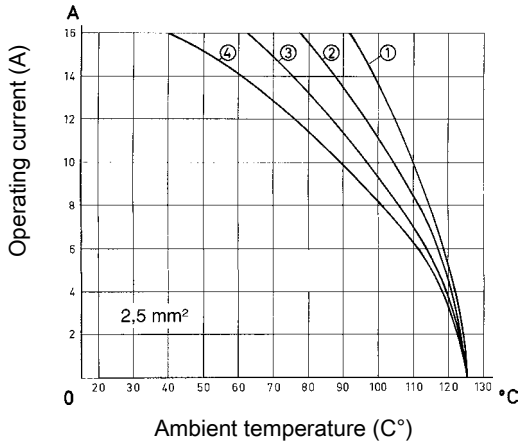

① Han® 6 E AV
② Han® 10 E AV
③ Han® 16 E AV
④ Han® 24 E AV

Technical characteristics

Contacts	6, 10, 16, 24
Electrical data acc. to IEC 61984	**16 A 500 V 6 kV 3**
Rated current	16 A
Rated voltage	500 V
Rated impulse voltage	6 kV
Pollution degree	3
Rated voltage acc. to UL	600 V
Insulation resistance	≥10^{10} Ohm
Limiting temperatures	-40 °C ... 125 °C
Flammability (insert) acc. to UL 94	V 0
Mating cycles	≥500
Tightening torque	0.5 Nm
Material (insert)	polycarbonate
Colour (insert)	RAL 7032 (light grey)
Material (contact)	copper alloy

Specifications and approvals

IEC 61984
IEC 60664-1

Details

Identification strips Han E® AV

Multi contour (MK) the following identification strips may be used

- HARTING 6 x 10 – 09 33 000 9971
- Murrplastik – KPX 6 / 10
- Weidmüller – DEK 6.5
- Phoenix – 4 K – DST 6

Single contour (SK) the following identification strips may be used

- Murrplastik – KWI 6/10
- Wieland – 9705 A/6.7

Identification

The individual terminals have the same identification as on the mating face. In addition each circuit may be separately labelled with identification strips fitted in the adjacent slots.

Number of contacts

6+ ⏚

500 V
16 A

Identification	Wire cross section (mm²)	Part number male	Part number female	Drawing Dimensions in mm
Terminal Block Connectors, Screw terminal, Left hand version, Multi contour (MK), silver plated contacts, contact resistance ≤4 mOhm 	0.2 – 2.5	09 33 006 4625	09 33 006 4725	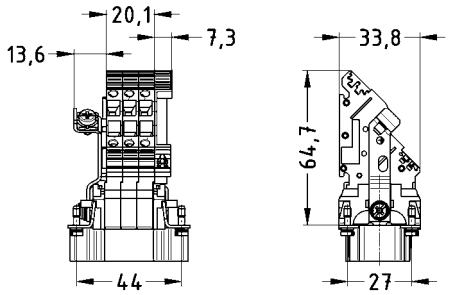 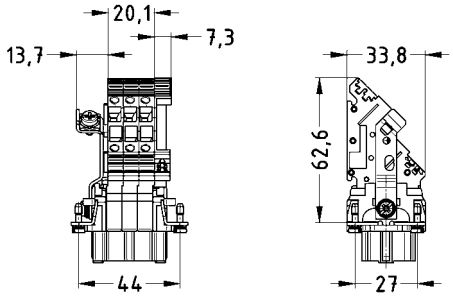
Terminal Block Connectors, Screw terminal, Left hand version, Single contour (SK), silver plated contacts, contact resistance ≤4 mOhm 	0.2 – 2.5	09 33 006 4626	09 33 006 4726	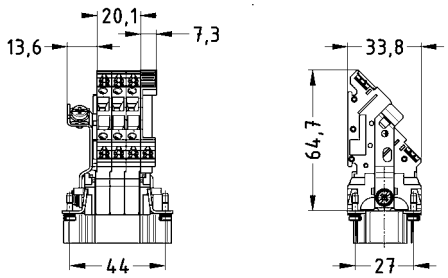 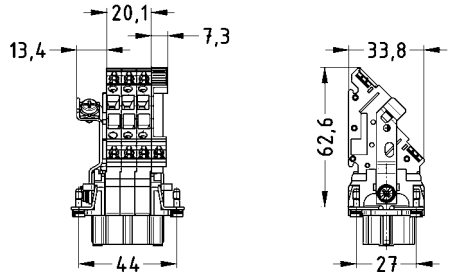

Identification	Wire cross section (mm²)	Part number male	Part number female	Drawing Dimensions in mm
Terminal Block Connectors, Screw terminal, Right hand version, Multi contour (MK), silver plated contacts, contact resistance ≤4 mOhm 	0.2 – 2.5	09 33 006 4635	09 33 006 4735	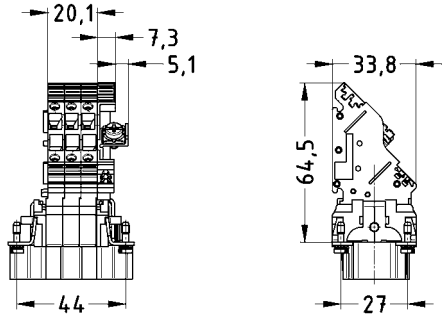 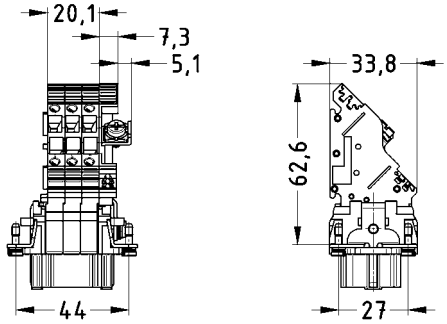
Terminal Block Connectors, Screw terminal, Right hand version, Single contour (SK), silver plated contacts, contact resistance ≤4 mOhm 	0.2 – 2.5	09 33 006 4636	09 33 006 4736	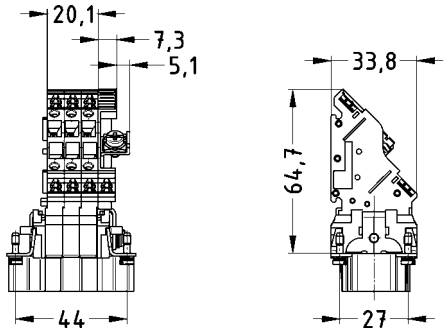 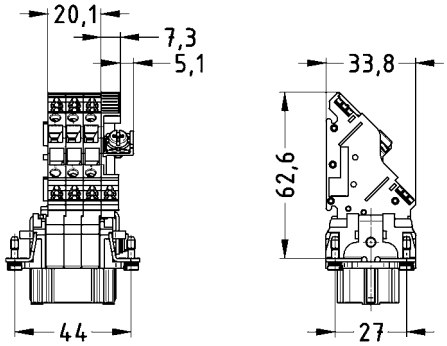

Number of contacts

10+ ⏚

500 V
16 A

Identification	Wire cross section (mm²)	Part number male	Part number female	Drawing Dimensions in mm
Terminal Block Connectors, Screw terminal, Left hand version, Multi contour (MK), silver plated contacts, contact resistance ≤4 mOhm 	0.2 – 2.5	09 33 010 4625	09 33 010 4725	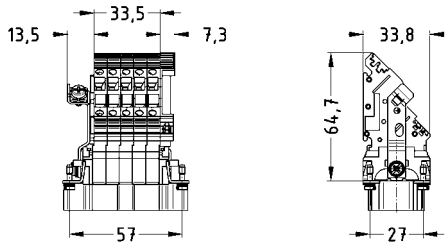 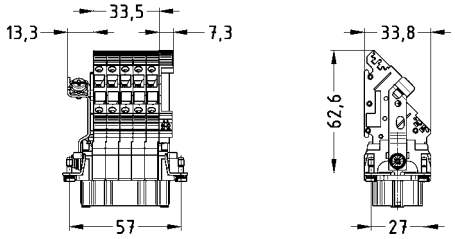
Terminal Block Connectors, Screw terminal, Left hand version, Single contour (SK), silver plated contacts, contact resistance ≤4 mOhm 	0.2 – 2.5	09 33 010 4626	09 33 010 4726	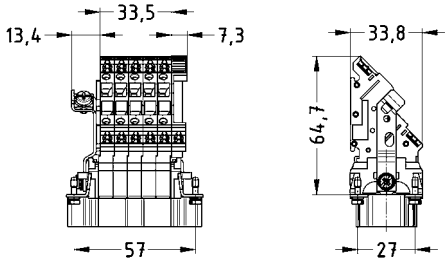 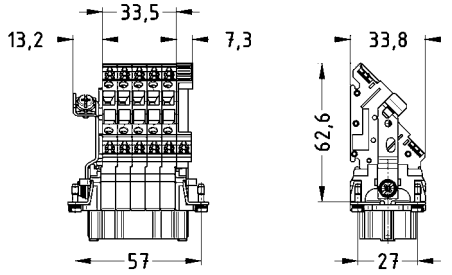

Identification	Wire cross section (mm²)	Part number male	Part number female	Drawing Dimensions in mm
Terminal Block Connectors, Screw terminal, Right hand version, Multi contour (MK), silver plated contacts, contact resistance ≤4 mOhm 	0.2 – 2.5	09 33 010 4635	09 33 010 4735	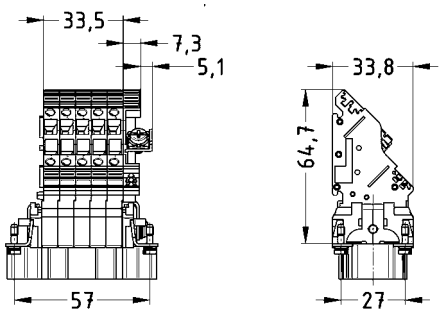 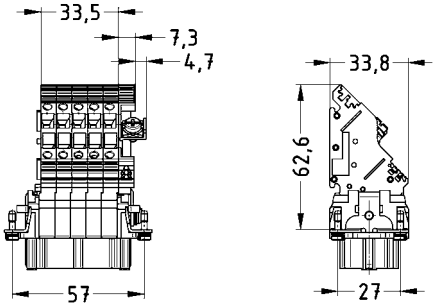
Terminal Block Connectors, Screw terminal, Right hand version, Single contour (SK), silver plated contacts, contact resistance ≤4 mOhm 	0.2 – 2.5	09 33 010 4636	09 33 010 4736	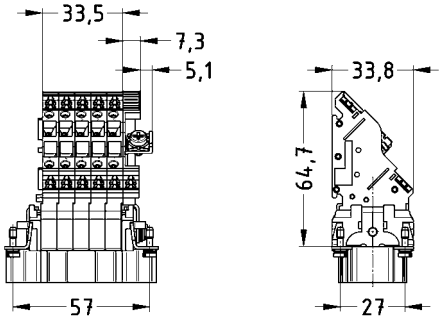 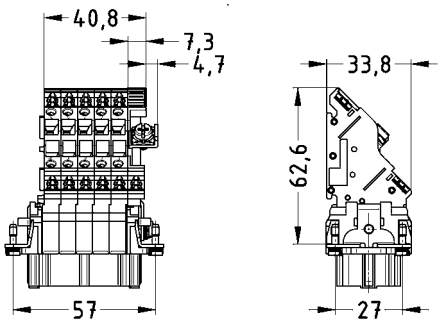

Number of contacts

16+ ⏚

500 V
16 A

Identification	Wire cross section (mm²)	Part number male	Part number female	Drawing Dimensions in mm
Terminal Block Connectors, Screw terminal, Left hand version, Multi contour (MK), silver plated contacts, contact resistance ≤4 mOhm 	0.2 – 2.5	09 33 016 4625	09 33 016 4725	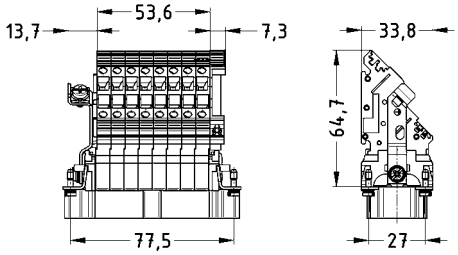 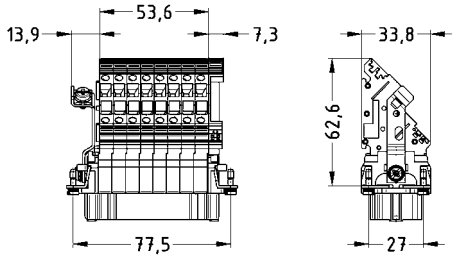
Terminal Block Connectors, Screw terminal, Left hand version, Single contour (SK), silver plated contacts, contact resistance ≤4 mOhm 	0.2 – 2.5	09 33 016 4626	09 33 016 4726	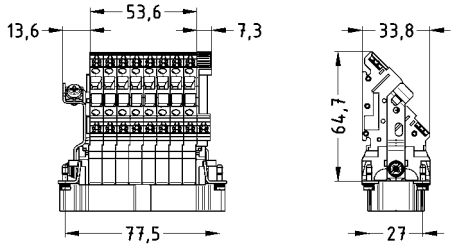 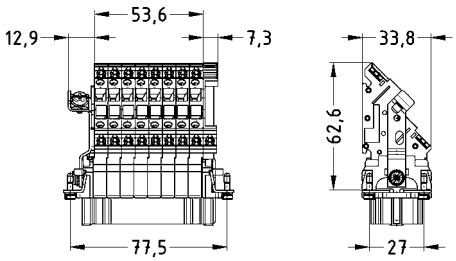

Identification	Wire cross section (mm²)	Part number male	Part number female	Drawing Dimensions in mm
Terminal Block Connectors, Screw terminal, Right hand version, Multi contour (MK), silver plated contacts, contact resistance ≤4 mOhm 	0.2 – 2.5	09 33 016 4635	09 33 016 4735	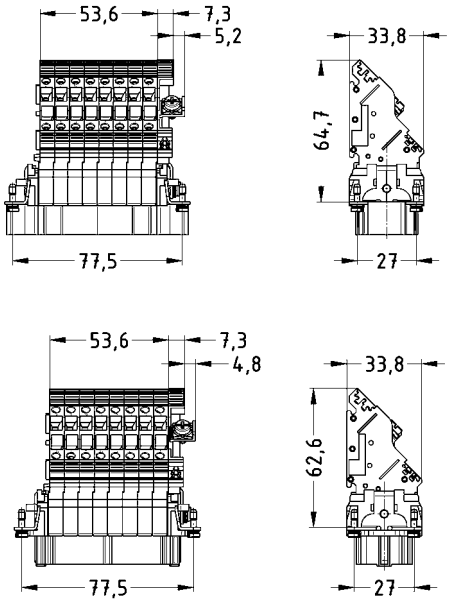
Terminal Block Connectors, Screw terminal, Right hand version, Single contour (SK), silver plated contacts, contact resistance ≤4 mOhm 	0.2 – 2.5	09 33 016 4636	09 33 016 4736	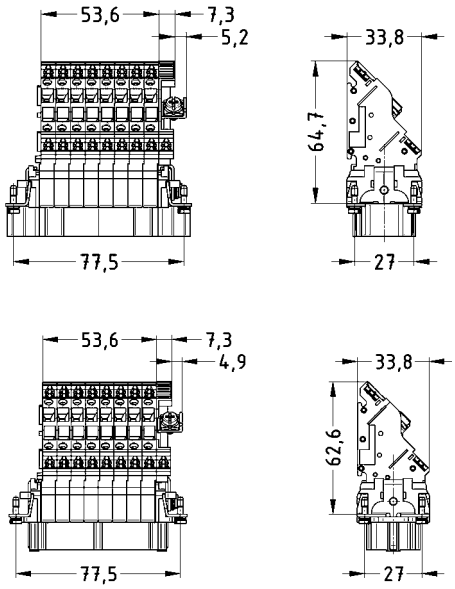

Number of contacts

24+ ⏚

500 V
16 A

Identification	Wire cross section (mm²)	Part number male	Part number female	Drawing Dimensions in mm
Terminal Block Connectors, Screw terminal, Left hand version, Multi contour (MK), silver plated contacts, contact resistance ≤4 mOhm 	0.2 – 2.5	09 33 024 4625	09 33 024 4725	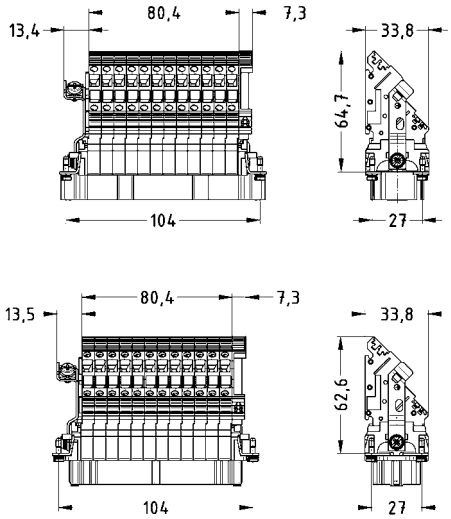
Terminal Block Connectors, Screw terminal, Left hand version, Single contour (SK), silver plated contacts, contact resistance ≤4 mOhm 	0.2 – 2.5	09 33 024 4626	09 33 024 4726	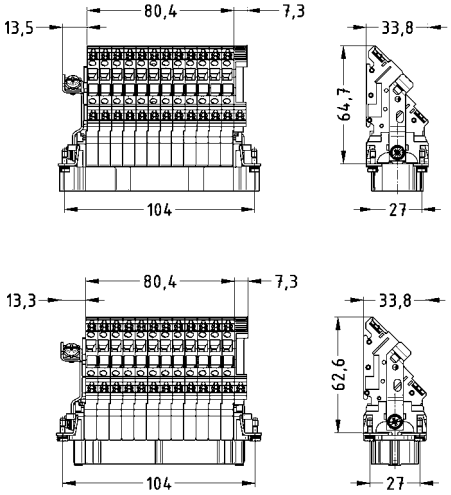

Identification	Wire cross section (mm²)	Part number male	Part number female	Drawing Dimensions in mm
Terminal Block Connectors, Screw terminal, Right hand version, Multi contour (MK), silver plated contacts, contact resistance ≤4 mOhm 	0.2 – 2.5	09 33 024 4635	09 33 024 4735	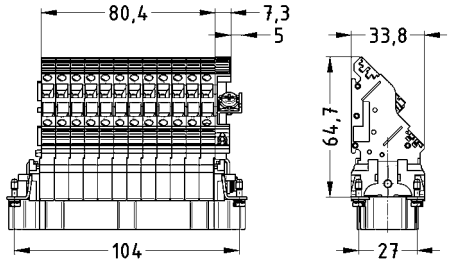 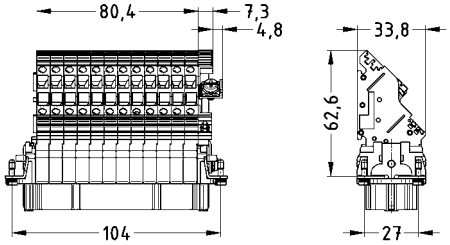
Terminal Block Connectors, Screw terminal, Right hand version, Single contour (SK), silver plated contacts, contact resistance ≤4 mOhm 	0.2 – 2.5	09 33 024 4636	09 33 024 4736	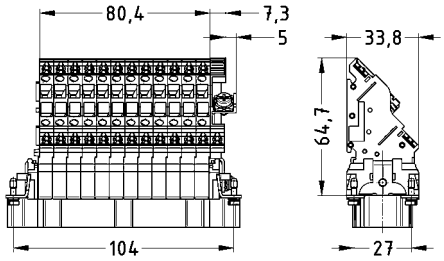 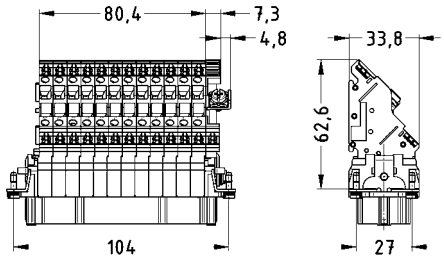

Features

- For left or right hand applications available
- PE and connecting terminal for contact no.1 are at the top in both types of installation
- Mountable in standard bulkhead housing and on standard rails by using of fixing elements
- Reliable cage clamp termination

Derating

Current carrying capacity

The current carrying capacity of the connectors is limited by the thermal load capability of the contact element material including the connections and the insulating parts. The derating curve is therefore valid for currents which flow constantly (non-intermittent) through each contact element of the connector evenly, without exceeding the allowed maximum temperature.

Measuring and testing techniques acc. to IEC 60512-5-2

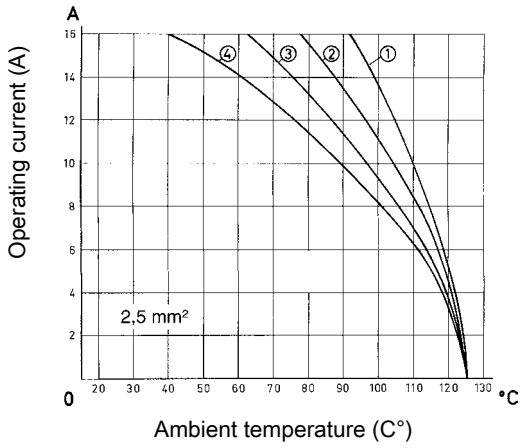

① Han® 6 ES AV
② Han® 10 ES AV
③ Han® 16 ES AV
④ Han® 24 ES AV

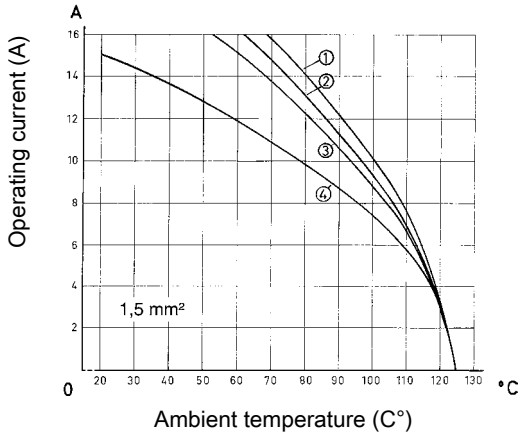

① Han® 6 ES AV
② Han® 10 ES AV
③ Han® 16 ES AV
④ Han® 24 ES AV

Technical characteristics

Contacts	6, 10, 16, 24
Electrical data acc. to IEC 61984	**16 A 500 V 6 kV 3**
Rated current	16 A
Rated voltage	500 V
Rated impulse voltage	6 kV
Pollution degree	3
Rated current acc. to UL	12 A
Rated current acc. to CSA	12 A
Rated voltage acc. to UL	600 V
Insulation resistance	≥10^{10} Ohm
Limiting temperatures	-40 °C ... 125 °C
Flammability (insert) acc. to UL 94	V 0
Mating cycles	≥500
Material (insert)	polycarbonate
Colour (insert)	RAL 7032 (light grey)
Material (contact)	copper alloy

Specifications and approvals

IEC 61984
IEC 60664-1

Details

Identification strips Han® ES AV

Single contour (SK) the following identification strips may be used

- HARTING – 09 33 000 9973 (6 x 15)
- Murrplastik – KWI 6/15
- Wieland – 9705 A/6.7

Identification

The individual terminals have the same identification as on the mating face. In addition each circuit may be separately labelled with identification strips fitted in the adjacent slots.

Number of contacts

6+ ⏚

500 V
16 A

Identification	Wire cross section (mm²)	Part number male	Part number female	Drawing Dimensions in mm
Terminal Block Connectors, Cage-clamp terminal, Left hand version, Single contour (SK), silver plated contacts, contact resistance ≤4 mOhm 	0.14 – 2.5	09 33 006 4629	09 33 006 4729	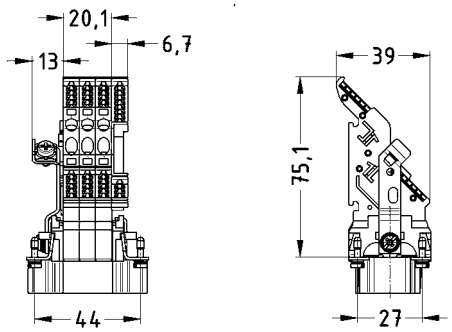 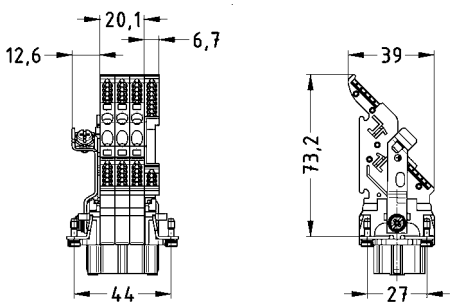
Terminal Block Connectors, Cage-clamp terminal, Right hand version, Single contour (SK), silver plated contacts, contact resistance ≤4 mOhm 	0.14 – 2.5	09 33 006 4639	09 33 006 4739	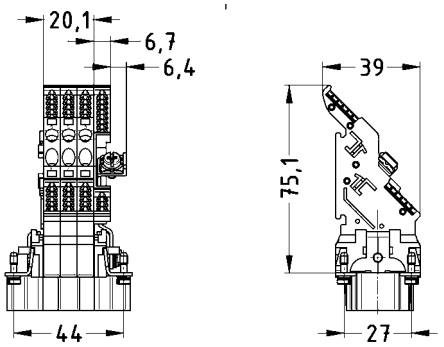 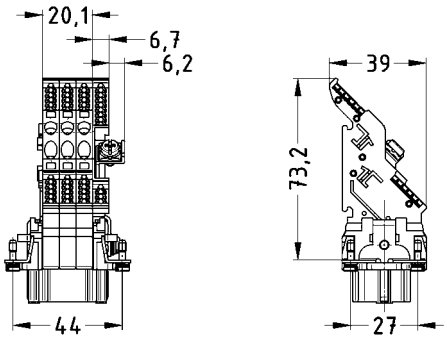

Number of contacts

10+ ⏚

500 V
16 A

Identification	Wire cross section (mm²)	Part number male	Part number female	Drawing Dimensions in mm
Terminal Block Connectors, Cage-clamp terminal, Left hand version, Single contour (SK), silver plated contacts, contact resistance ≤4 mOhm 	0.14 – 2.5	09 33 010 4629	09 33 010 4729	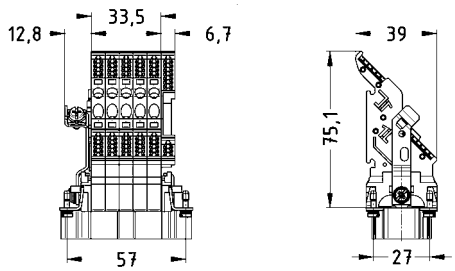 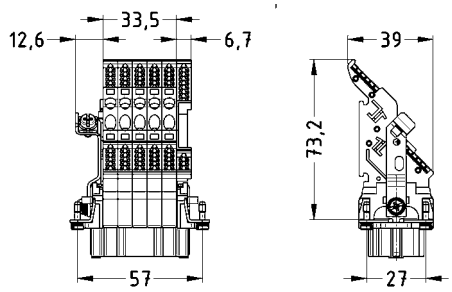
Terminal Block Connectors, Cage-clamp terminal, Right hand version, Single contour (SK), silver plated contacts, contact resistance ≤4 mOhm 	0.14 – 2.5	09 33 010 4639	09 33 010 4739	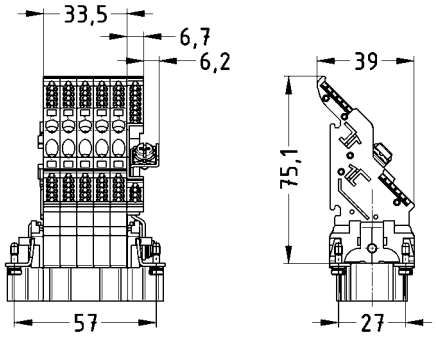 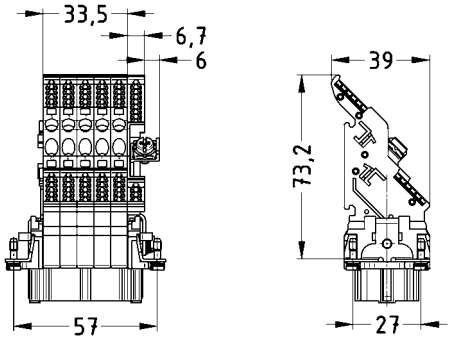

Number of contacts

16+ ⏚

500 V
16 A

Identification	Wire cross section (mm²)	Part number male	Part number female	Drawing Dimensions in mm
Terminal Block Connectors, Cage-clamp terminal, Left hand version, Single contour (SK), silver plated contacts, contact resistance ≤4 mOhm 	0.14 – 2.5	09 33 016 4629	09 33 016 4729	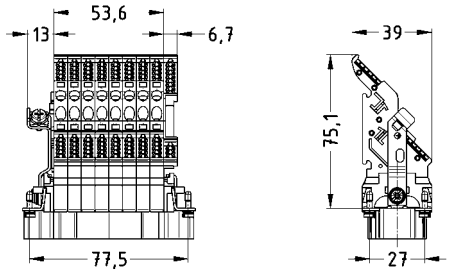 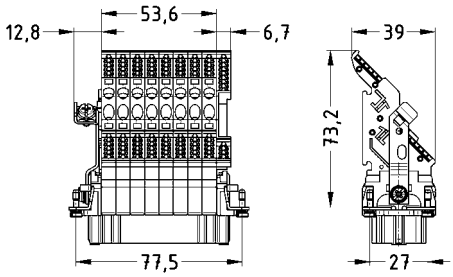
Terminal Block Connectors, Cage-clamp terminal, Right hand version, Single contour (SK), silver plated contacts, contact resistance ≤4 mOhm 	0.14 – 2.5	09 33 016 4639	09 33 016 4739	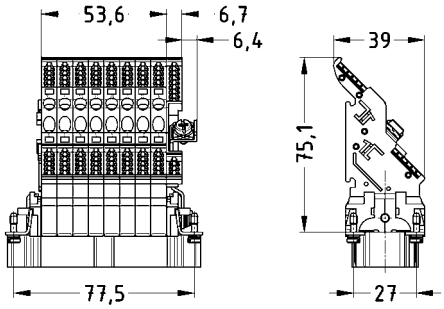 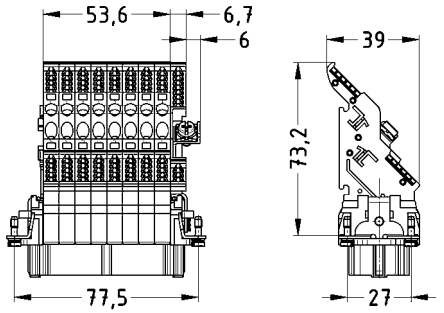

Number of contacts

24+ ⏚

500 V
16 A

Identification	Wire cross section (mm²)	Part number male	Part number female	Drawing Dimensions in mm
Terminal Block Connectors, Cage-clamp terminal, Left hand version, Single contour (SK), silver plated contacts, contact resistance ≤4 mOhm 	0.14 – 2.5	09 33 024 4629	09 33 024 4729	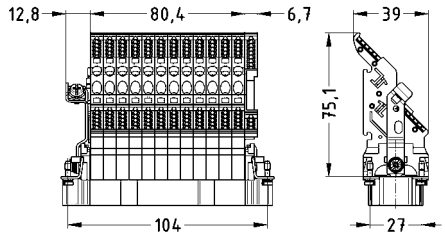 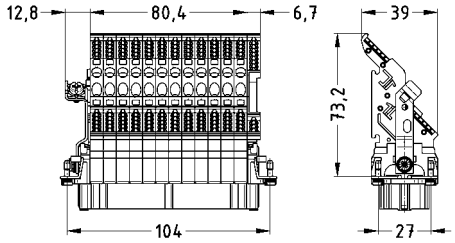
Terminal Block Connectors, Cage-clamp terminal, Right hand version, Single contour (SK), silver plated contacts, contact resistance ≤4 mOhm 	0.14 – 2.5	09 33 024 4639	09 33 024 4739	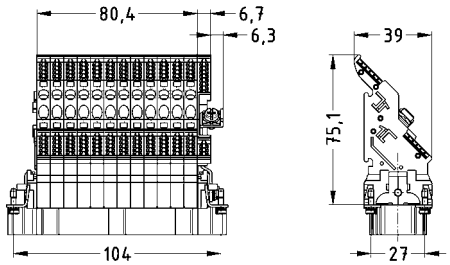 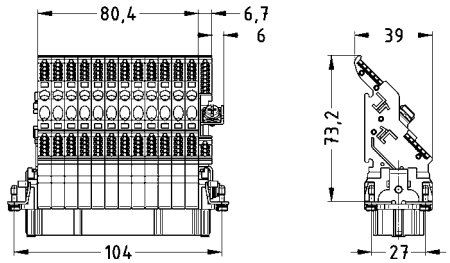

Han AV

Details

There are moulded slots at the rear of the terminal block connectors and distributors to accept the fixing elements. When used these elements, for example, can be used to secure the connectors inside the switch cabinets on standard rails.

Details

For mounting

Terminal block connector Han E® AV / Han® ES AV
Han® 6 E AV, Han® 6 ES AV = 1 fixing element
Han® 10/16/24 E AV, Han® 10/16/24 ES AV = 2 fixing elements
Terminal block connector Han D® AV
Han® 40/64 D AV = 2 fixing elements
Distributor = 1 fixing element

Identification	Part number	Drawing Dimensions in mm
Han D® AV, Distributor, Fixing element	09 33 000 9928	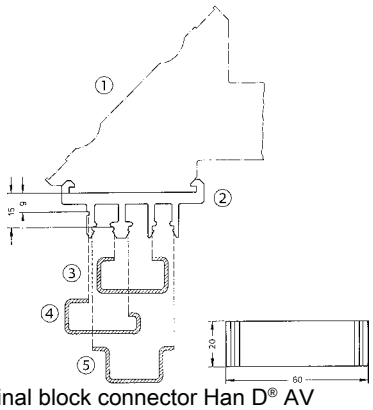 ① Terminal block connector Han D® AV ② Fixing element ③ C-rail IEC 60715-C 30 ④ G-rail IEC 60715-G32 ⑤ Rail IEC 60715-35 x 7.5 or -35 x 15
Han E® AV, Han® ES AV, Fixing element	09 33 000 9929	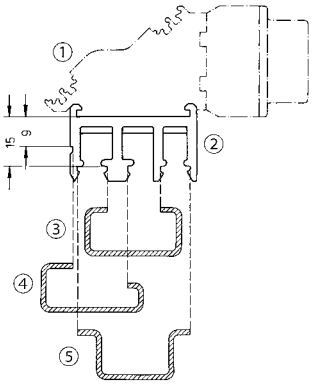 ① Terminal block connector Han E® AV ② Fixing element ③ C-rail IEC 60715-C 30 ④ G-rail IEC 60715-G32 ⑤ Rail IEC 60715-35 x 7.5 or -35 x 15

Identification	Part number	Drawing Dimensions in mm
Han E® AV, Adapter, to fit identification strips, Multi-Contour (MK) 	09 33 000 9964 09 33 000 9965 09 33 000 9966 09 33 000 9967	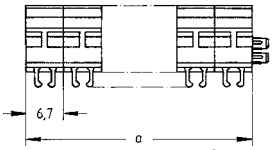 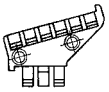 09 33 000 9964 Han® 6 E AV a = 26.8 mm 09 33 000 9965 Han® 10 E AV a = 40.2 mm 09 33 000 9966 Han® 16 E AV a = 60.3 mm 09 33 000 9967 Han® 24 E AV a = 87.4 mm
Han E® AV, Identification strip, Multi-Contour (MK) Range of delivery: 64 pieces in one block 	09 33 000 9971	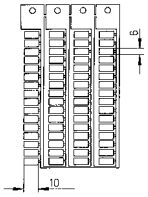
Han® ES AV, Identification strip, Single-Contour (SK) Range of delivery: 64 pieces in one block 	09 33 000 9973	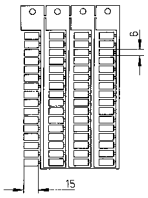
Han D® AV, Identification strip, Multi-Contour (MK) Range of delivery: 88 pieces in one block 	09 21 000 9971	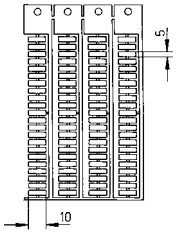

Contents | Page

Staf®..... **09.2**

Derating

Current carrying capacity

The current carrying capacity of the connectors is limited by the thermal load capability of the contact element material including the connections and the insulating parts. The derating curve is therefore valid for currents which flow constantly (non-intermittent) through each contact element of the connector evenly, without exceeding the allowed maximum temperature.

Measuring and testing techniques acc. to IEC 60512-5-2

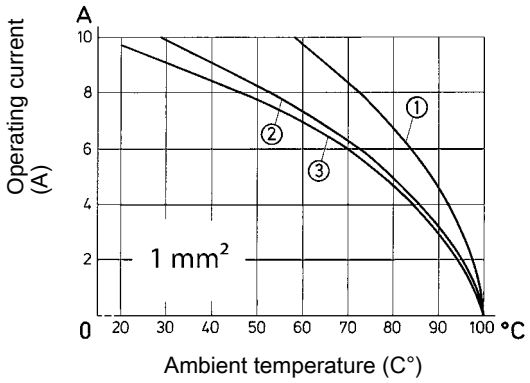

① Staf® 6
② Staf® 14
③ Staf® 20

Technical characteristics

Contacts	6, 14, 20, 40
Rated current	10 A
Rated voltage AC	25 V
Rated voltage DC	60 V
Rated voltage acc. to UL	50 V
Rated voltage acc. to CSA	50 V
Insulation resistance	≥10^{10} Ohm
Limiting temperatures	-40 °C ... 100 °C
Flammability (insert) acc. to UL 94	HB
Mating cycles	≥500
Tightening torque	0.25 Nm
Flammability (seal) acc. to UL 94	HB
Material (insert)	polyamide
Colour (insert)	black
Material (contact)	copper alloy

Specifications and approvals

IEC 61984
IEC 60664-1

Details

In accordance with the appropriate regulations a wire-end sleeve has to be used at clamps without wire protection (see “screw terminal”, chapter 00).

Number of contacts

6

~ 25 V
- 60 V
10 A

Identification	Wire cross section (mm²)	Part number	Drawing Dimensions in mm
Staf®, Screw terminal, Male insert (F), silver plated contacts, contact resistance ≤2 mOhm 	1.5	09 70 006 2616	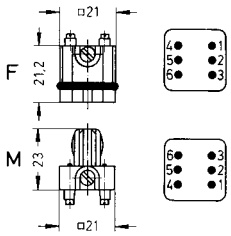 Contact arrangement (view from termination side)
Staf®, Screw terminal, Female Insert (M), silver plated contacts, contact resistance ≤2 mOhm 	1.5	09 70 006 2813	
Staf®, Solder terminal, Male insert (F), silver plated contacts, contact resistance ≤2 mOhm 	2.5	09 70 006 2615	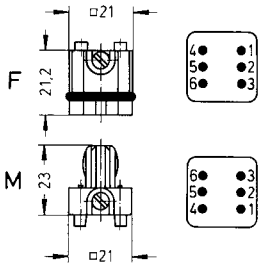 Contact arrangement (view from termination side)
Staf®, Solder terminal, Female Insert (M), silver plated contacts, contact resistance ≤2 mOhm 	2.5	09 70 006 2812	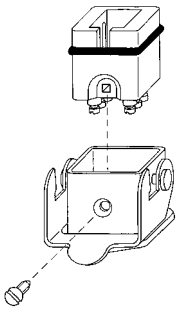 Mounting example

Number of contacts

14

~ 25 V
- 60 V
10 A

Identification	Wire cross section (mm²)	Part number	Drawing Dimensions in mm
Staf®, Screw terminal, Male insert (F), silver plated contacts, contact resistance ≤2 mOhm 	1.5	09 70 014 2614	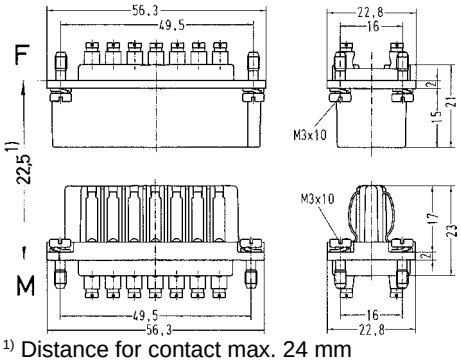 1) Distance for contact max. 24 mm
Staf®, Screw terminal, Female Insert (M), silver plated contacts, contact resistance ≤2 mOhm 	1.5	09 70 014 2811	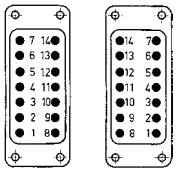 Contact arrangement (view from termination side)
Staf®, Solder terminal, Male insert (F), silver plated contacts, contact resistance ≤2 mOhm 	2.5	09 70 014 2613	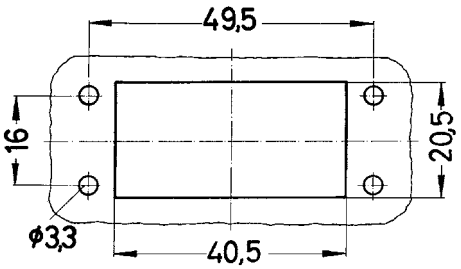 Panel cut out for inserts for use without hoods/housings
Staf®, Solder terminal, Female Insert (M), silver plated contacts, contact resistance ≤2 mOhm 	2.5	09 70 014 2810	

Number of contacts

20

~ 25 V
- 60 V
10 A

Identification	Wire cross section (mm²)	Part number	Drawing Dimensions in mm
Staf®, Screw terminal, Male insert (F), silver plated contacts, contact resistance ≤2 mOhm 	1.5	09 70 020 2622	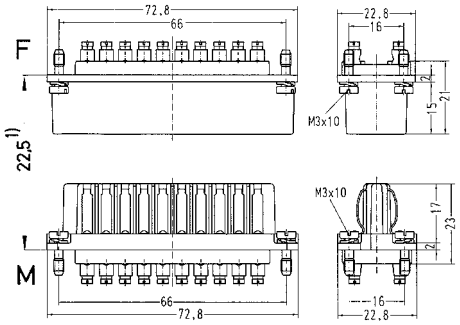 1) Distance for contact max. 24 mm
Staf®, Screw terminal, Female Insert (M), silver plated contacts, contact resistance ≤2 mOhm 	1.5	09 70 020 2817	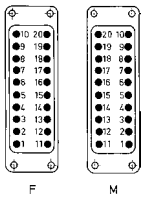 Contact arrangement (view from termination side)
Staf®, Solder terminal, Male insert (F), silver plated contacts, contact resistance ≤2 mOhm 	2.5	09 70 020 2621	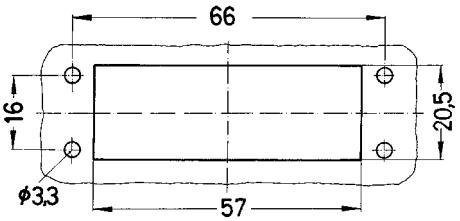 Panel cut out for inserts for use without hoods/housings
Staf®, Solder terminal, Female Insert (M), silver plated contacts, contact resistance ≤2 mOhm 	2.5	09 70 020 2816	

Staf

Number of contacts

40

~ 25 V
- 60 V
10 A

Identification	Wire cross section (mm²)	Part number	Drawing Dimensions in mm
Staf®, Screw terminal, Male insert (F), silver plated contacts, contact resistance ≤2 mOhm Please order two inserts for a complete assembly!	1.5	09 70 020 2622	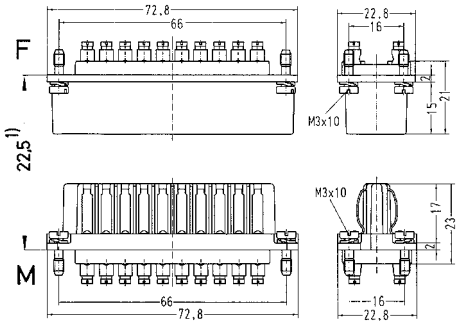 1) Distance for contact max. 24 mm
Staf®, Screw terminal, Female Insert (M), silver plated contacts, contact resistance ≤2 mOhm Please order two inserts for a complete assembly!	1.5	09 70 020 2817	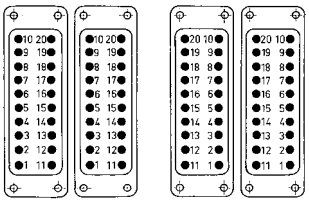 Contact arrangement (view from termination side)
Staf®, Solder terminal, Male insert (F), silver plated contacts, contact resistance ≤2 mOhm Please order two inserts for a complete assembly!	2.5	09 70 020 2621	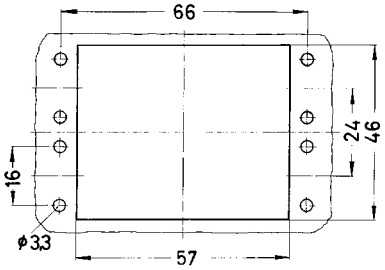 Panel cut out for inserts for use without hoods/housings
Staf®, Solder terminal, Female Insert (M), silver plated contacts, contact resistance ≤2 mOhm Please order two inserts for a complete assembly!	2.5	09 70 020 2816	

Staf

Contents | Page

Latching parts	**11.3**
Plastic panel mounting	**11.5**
Metal panel mounting	**11.6**
Insert mounting	**11.7**
Insert mounting with carrier element	**11.8**
Plastic housings	**11.10**
Accessories	**11.15**

Note:
A connector mounted with Han-Snap® elements does not offer finger safe protection to the relevant standards. In this case protection against electric shock must be provided by the installation methods of the user. The fixing of the PE terminal must be conducted on equal side of the connector insert to avoid ground interruptions.

- The Han-Snap® system is ideal for connectors within closed electrical operating environments.
  These can be rooms, cabinets or termination boxes.

- The Han-Snap® components are an innovative design which offer the following advantages and characteristics:
  - reduction of material and assembly costs;
  - fast and easy installation;
  - preassembly of Han connectors;
  - secure and rigid mounting of Han connectors;
  - frequent use of latching systems is possible (up to several thousand cycles).

- The Han-Snap® elements are compatible with the standard inserts and terminal block connectors of the following series (named series Han B as follows)
  - Han D®, 40 and 64 pins
  - Han DD®
  - Han E®
  - Han® EE
  - Han® EEE
  - Han® ES
  - Han Hv E®
  - Han® Hv ES
  - Han® HsB
  - Han-Com®
  - Han-Modular®

- With the Han-Snap® adapter the following standard inserts are compatible (named series Han A as follows):
  - Han D®, 15 and 25 pins
  - Han A®, 10 and 16 pins

- The Han-Snap® elements are a mechanical system for the mounting assembly and security of Han connectors.
  Normally the elements are assembled to the connector insert using the standard insert fixing screws.
  If coding is required the standard fixing screws may be replaced by either code pins or guide pins and bushes.

- On free connectors the wires or cables can be secured to the strain relief element with standard cable ties of 5 mm width maximum.

Han-Snap® on standard rail

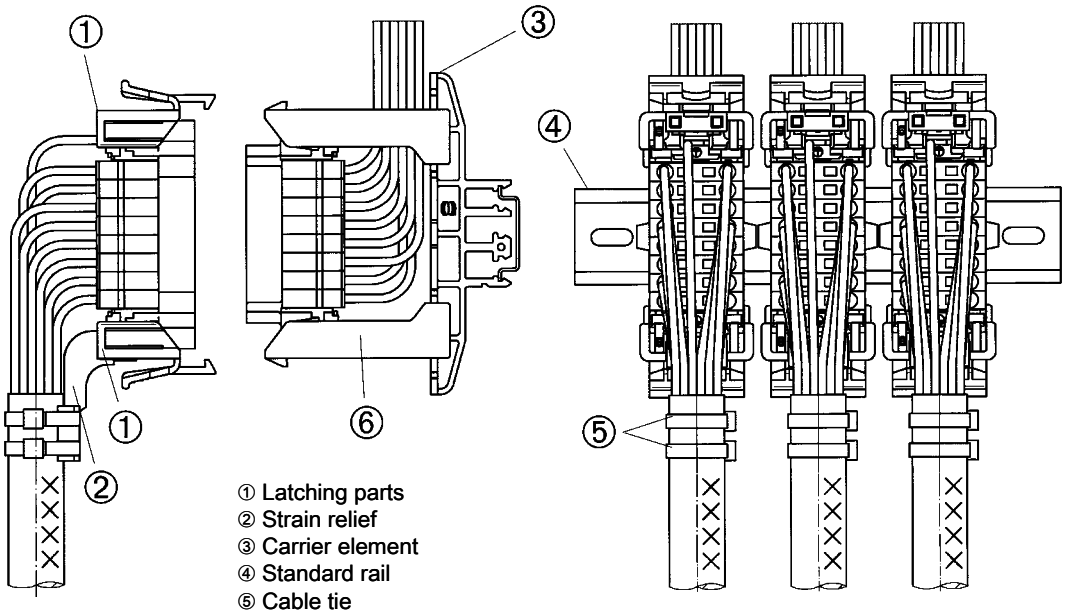

① Latching parts
② Strain relief
③ Carrier element
④ Standard rail
⑤ Cable tie
⑥ Insert mounting

Latching parts

Features

- Compact design saves space
- Practical and easy handling
- Reduction of material and assembly costs

Technical characteristics

Limiting temperatures	-40 °C ... 125 °C
Flammability (hoods/housings) acc. to UL 94	V 0
Tightening torque	0.8 Nm
Degree of protection acc. to IEC 60529	IP20
Retention force without guiding	200 N
Retention force with guiding	300 N
Vibration resistance	IEC 60068, part 2-6, BN 74018
Shock immunity	IEC 60068, part 2-27, BN 74018
Material (accessories)	polycarbonate
Colour (accessories)	RAL 7032 (light grey)

Details

Inserts can be mounted on the panel mounting part and the latching part with the standard insert mounting screws.

High mechanical security of the fixings.

No functional impairment is caused by slight over tightening of the fixing screws.

Alternatively, Han coding elements (code pins or guide pins and bushes) may be used.

Please note: The strain relief element should be assembled to the latching part at the end of the insert opposite to the ground screw.

Up to 2 cable ties with max. 5 mm width can be used on the strain relief.

Label 9 x 20 mm may be fitted in both sides of each latching element.

Label 7 x 20 mm may be fitted to the top of the latching part without the strain relief element.

Identification	Part number	Drawing Dimensions in mm
Han-Snap®, Latching parts, with strain relief Range of delivery: 1 latching part with strain relief, 1 latching part	09 33 000 9991	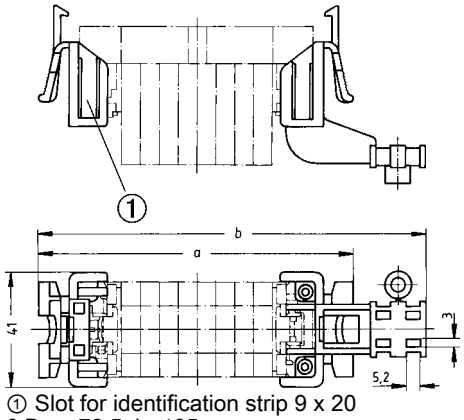 ① Slot for identification strip 9 x 20 6 B: a=78,5; b=105 10 B: a=91,5; b=118 16 B: a=112,5; b=138,5 24 B: a=138,5; b=165

Identification	Part number	Drawing Dimensions in mm
Han-Snap®, Latching parts, with strain relief, and panel mounting parts Range of delivery: 1 latching part with strain relief, 1 panel mounting part 	09 33 000 9990	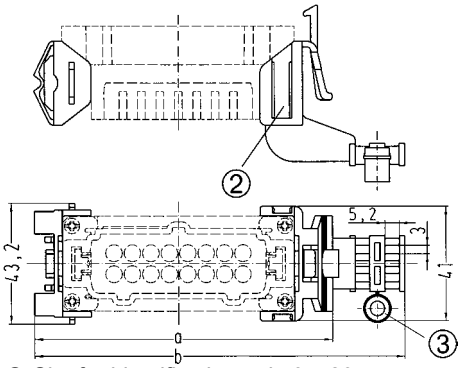 ② Slot for identification strip 9 x 20 ③ Distance bush 6 B: a=75; b=101 10 B: a=88; b=114 16 B: a=108.5; b=134.5 24 B: a=135; b=161
Han-Snap®, Latching parts Range of delivery: 2 latching parts 	09 33 000 9987	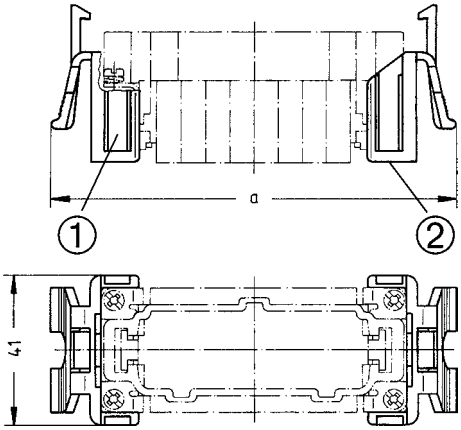 ① Slot for identification strip 9 x 20 ② Slot for identification strip 7 x 20 6 B: a= 78.5 10 B: a= 91.5 16 B: a= 112.5 24 B: a= 138.5

Plastic panel mounting

Features

- Snap element for sheet-metal cut out
- Compact design saves space
- Practical and easy handling
- Reduction of material and assembly costs

Technical characteristics

Limiting temperatures	-40 °C ... 125 °C
Flammability (hoods/housings) acc. to UL 94	V 0
Tightening torque	0.8 Nm
Retention force without guiding	250 N, 400 N
Retention force with guiding	400 N, 500 N
Vibration resistance	IEC 60068, part 2-6, BN 74018
Shock immunity	IEC 60068, part 2-27, BN 74018
Material (accessories)	polycarbonate
Colour (accessories)	RAL 7032 (light grey)

Details

Connector inserts and terminal block connectors can be fixed on elements for panel mounting with standard insert mounting screws.

High mechanical security of the fixings. No functional impairment is caused by slight over tightening of the fixing screws.

Alternatively, Han coding elements (code pins or guide pins and bushes) may be used.

Connector assembly into the panel (sheet-metal) cut out or two parallel mounted rails is possible from mating or termination side.

Han-Snap

Identification	Part number	Drawing Dimensions in mm
Han-Snap®, Panel mounting parts Range of delivery: 2 plastic panel mounting parts sufficient for one insert or terminal block connector 	09 33 000 9985	Panel cut out Sheet-metal thickness 1.3 - 3 mm 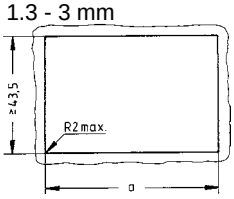 6 B: $a^{+0,5}$= 65 10 B: $a^{+0,5}$= 78 16 B: $a^{+0,5}$= 98 24 B: $a^{+0,5}$= 125 10 A: $a^{+0,5}$= 81.5 16 A: $a^{+0,5}$= 98 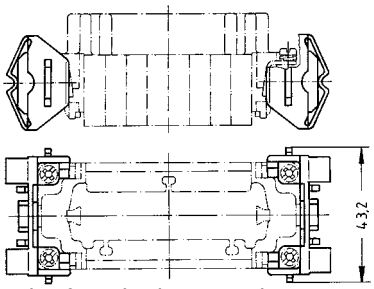 Min. retention force in sheet-metal cut out Mating without guiding system 250 N Mating with guiding system 400 N Unmating without guiding system 400 N Unmating with guiding system 500 N

Metal panel mounting

Features

- Snap element for sheet-metal cut out
- Compact design saves space
- Practical and easy handling
- Reduction of material and assembly costs

Technical characteristics

Limiting temperatures	-40 °C ... 125 °C
Tightening torque	0.8 Nm
Vibration resistance	IEC 60068, part 2-6, BN 74018
Shock immunity	IEC 60068, part 2-27, BN 74018
Material (accessories)	zinc die-cast

Specifications and approvals

c UL us

Details

Connector inserts and terminal block connectors can be fixed on elements for panel mounting with standard insert mounting screws.

High mechanical security of the fixings.

Alternatively, Han coding elements (code pins or guide pins and bushes) may be used.

Connector assembly into the panel (sheet-metal) cut out or two parallel mounted rails is possible from mating or termination side.

Identification	Part number	Drawing Dimensions in mm
Han-Snap®, Panel mounting parts Range of delivery: 2 metallic panel mounting parts sufficient for one insert or terminal block connector 	09 33 000 9984	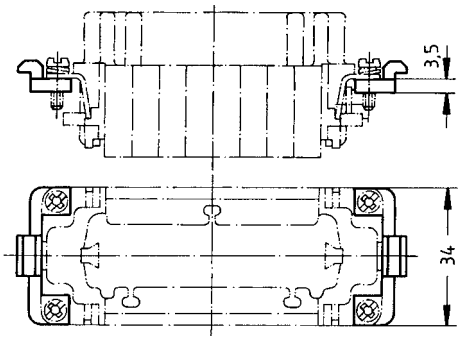 Panel cut out 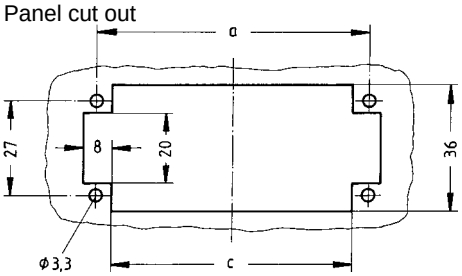 6 B: a=44; c=36 10 B: a=57; c=49 16 B: a=77.5; c=69.5 24 B: a=104; c=96

Insert mounting

Features

- Insert is mounted with carrier element
- A practical solution to fix the insert directly on a standard rail
- Insert can be assembled to Han-Snap® element with screw-driver
- Compact design saves space

Technical characteristics

Limiting temperatures	-40 °C ... 125 °C
Tightening torque	0.8 Nm
Retention force on rail	< 300 N (tension), < 1000 N (pressure)
Vibration resistance	IEC 60068, part 2-6, BN 74018
Shock immunity	IEC 60068, part 2-27, BN 74018
Material (accessories)	polycarbonate
Colour (accessories)	RAL 7032 (light grey)

Details

The insert mounting locks directly on standard rail 35 x 15 or 35 x 7.5 mm.

Inserts can be assembled on the insert mounting with the standard insert fixing screws.

High mechanical security of the fixings.

No functional impairment is caused by slight over tightening of the fixing screws.

Alternatively, Han® coding elements (code pins or guide pins and bushes) may be used.

The following labels may be fitted alternatively to the insert mounting parts for circuit identification purposes:

label 7 x 20 mm or

label 9 x 20 mm

Han-Snap

Identification	Part number	Drawing Dimensions in mm
Han-Snap®, Insert mounting Range of delivery: 2 insert mounting parts	09 33 000 9980	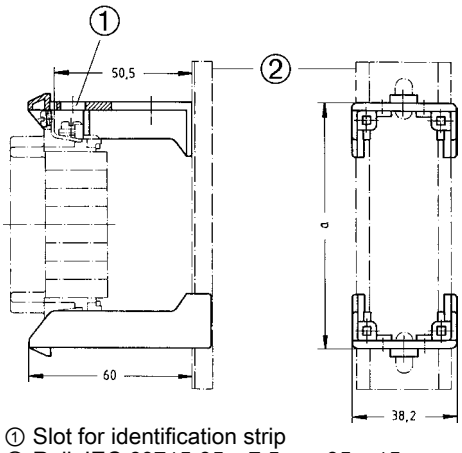 ① Slot for identification strip ② Rail IEC 60715-35 x 7.5 or -35 x 15 6 B: a= 57 10 B: a= 70 16 A / 16 B: a= 90.5 24 B: a= 117

Insert mounting with carrier element

Features

- Insert is mounted with carrier element
- A practical solution to fix the insert directly on a standard rail
- Insert can be assembled to Han-Snap® element with screw-driver
- Compact design saves space

Technical characteristics

Limiting temperatures	-40 °C ... 125 °C
Flammability (hoods/housings) acc. to UL 94	V 0
Tightening torque	0.8 Nm
Retention force on rail	< 450 N
Vibration resistance	IEC 60068, part 2-6, BN 74018
Shock immunity	IEC 60068, part 2-27, BN 74018
Material (accessories)	polycarbonate
Colour (accessories)	RAL 7032 (light grey)

Details

The carrier element is the basic element to mount the inserts in the cross direction on standard rails, for example:

- Caprail, 35 x 7.5 or 35 x 15 acc. to DIN EN 60 715
- C-rail, C 30 acc. to DIN EN 60 715
- G-rail, G 32 acc. to DIN EN 60 715

Where vibration is likely to be encountered, use the 35 x 15 mounting rails. When using the large carrier element, the 35 x 15 mounting rails are recommended to give greater stability.

Insert mounting type 6/10 is suitable for inserts of sizes Han 6 B and Han 10 B.

Insert mounting type 6/24 is suitable for all insert sizes:

Han 6 B / 10 B / 16 B / 24 B,

Han 16 A with the corresponding adapter.

Inserts can be assembled to the insert mountings with the standard insert mounting screws.

High mechanical security of the fixings. No functional impairment is caused by slight over tightening of the fixing screws.

Alternatively, Han coding elements (code pins or guide pins and bushes) may be used.

The following labels may be fitted to the insert mounting parts for circuit identification purposes:

- label 7 x 20 mm or

- label 9 x 20 mm

Identification	Part number	Drawing Dimensions in mm
Han-Snap®, Insert mounting, with carrier element, Type 6/10 Range of delivery: 2 insert mounting parts, 1 carrier element	09 33 000 9988	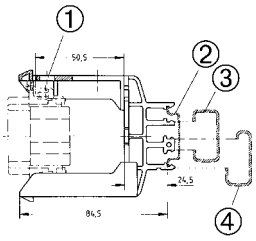 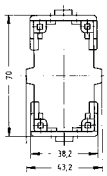

Insert mounting with carrier element

Identification	Part number	Drawing Dimensions in mm
Han-Snap®, Insert mounting, with carrier element, Type 6/24 Range of delivery: 2 insert mounting parts, 1 carrier element 	09 33 000 9989	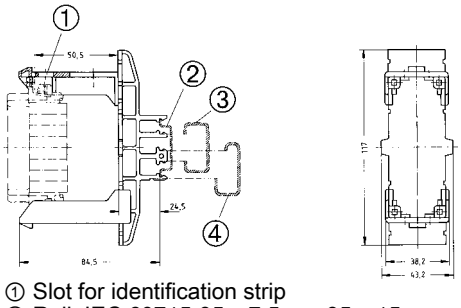 ① Slot for identification strip ② Rail IEC 60715-35 x 7.5 or -35 x 15 ③ C-rail IEC 60715-C 30 ④ G-rail IEC 60715-G32
Han-Snap®, Insert mounting, swinging, for standard inserts 	09 33 000 9801	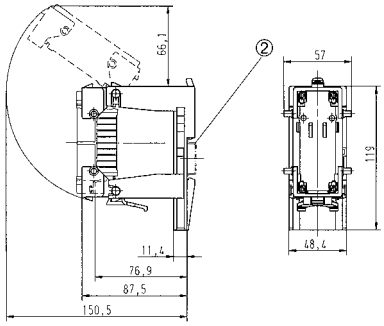 ② Rail IEC 60715-35 x 7.5 or -35 x 15
Han-Snap®, Insert mounting, swinging, for Han-Modular® hinged frames 	09 33 000 9803	

Han-Snap

Features

- Ideal for use within closed electrical operation enviroments
- Allows use off preassembled cables
- Optimised cost of material and assembly
- Insert can be assembled to Han-Snap® element with screw-driver

Technical characteristics

Limiting temperatures	-40 °C ... 125 °C
Flammability (hoods/housings) acc. to UL 94	V 0
Tightening torque	0.8 Nm
Vibration resistance	IEC 60068, part 2-6, BN 74018
Shock immunity	IEC 60068, part 2-27, BN 74018
Tightening torque (locking)	0.8 Nm
Material (hoods/housings)	polycarbonate
Colour (hoods/housings)	RAL 7032 (light grey)
Material (accessories)	polycarbonate
Colour (accessories)	RAL 7032 (light grey)

Details

2 identical half shells form a shell housing.

Each housing has 3 cable entries, one on top and one at each end. 2 x cable entries can be closed by enclosed blind plugs.

In the area of cable entries there are rectangular openings for mounting of cable ties up to max. 5 mm width.

In the mating area both housing shells are fixed by the standard insert fixing screws.

To release the half shells use screw driver (3.5 x 0.5).

Alternatively, Han® coding elements (code pins or guide pins and bushings) may be used.

High mechanical security of the fixings.

No functional impairment is caused by slight over tightening of the fixing screws. The blind plugs have slots for identification strips.

The following labels can be fitted:

label 7 x 20 mm or

label 9 x 20 mm

Han A-size 16 by using the corresponding adapter

Inserts can be assembled to the adapters with the standard insert fixing screws.

With the included screws the adapter can be fixed to the selected Han-Snap® element.

Identification	Part number	Drawing Dimensions in mm
Han-Snap®, Plastic housings Range of delivery: 2 half shells with blind plugs	09 33 006 0401	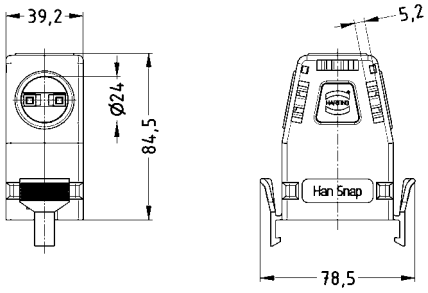
Han-Snap®, Protection cover, plastic	09 33 006 5401	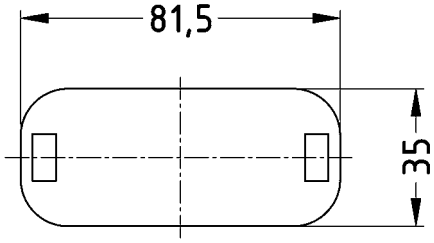

Identification	Part number	Drawing Dimensions in mm
Han-Snap®, Plastic housings Range of delivery: 2 half shells with blind plugs	09 33 010 0401	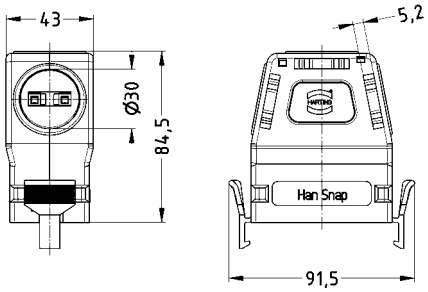
Han-Snap®, Protection cover, plastic	09 33 010 5401	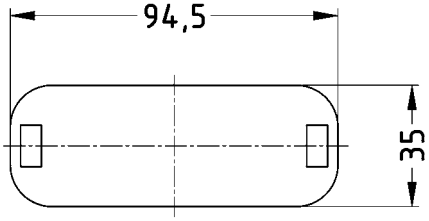

Identification	Part number	Drawing Dimensions in mm
Han-Snap®, Plastic housings Range of delivery: 2 half shells with blind plugs	09 33 016 0401	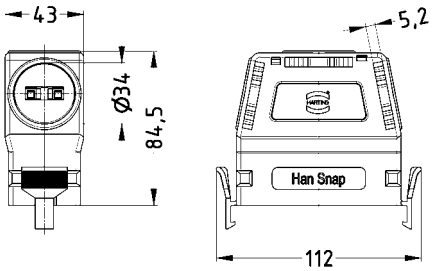
Han-Snap®, Protection cover, plastic	09 33 016 5401	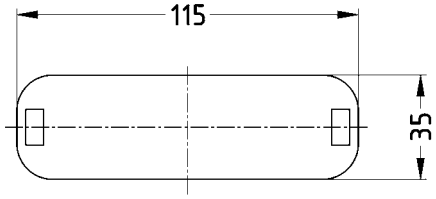
Han A® , Adapter Range of delivery: 2 adapters, 4 fixing screws	09 20 000 9933	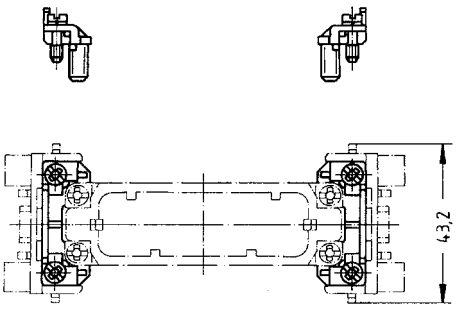

Han-Snap

Identification	Part number	Drawing Dimensions in mm
Han-Snap®, Plastic housings Range of delivery: 2 half shells with blind plugs	09 33 024 0401	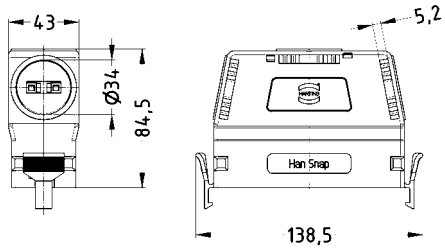
Han-Snap®, Protection cover, plastic	09 33 024 5401	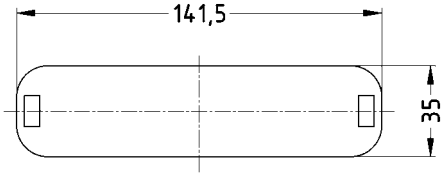

Identification	Part number male	Part number female	Drawing Dimensions in mm
standard, Coding system with guide pins/bushes, for application “insert with screw adapter” with/ without grip frame Please order 4 pieces for one connector	09 33 000 9808	09 33 000 9809	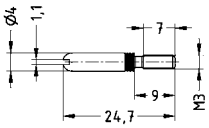 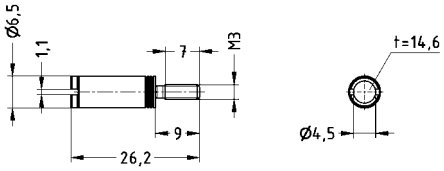
Coding element, only for swinging insert mountings 	09 33 000 9956	09 33 000 9957	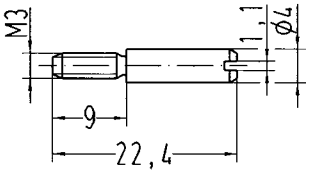 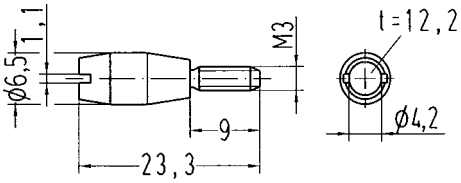

Han-Snap

Identification	Part number	Drawing Dimensions in mm
Identification strip Range of delivery: single	09 33 000 9981	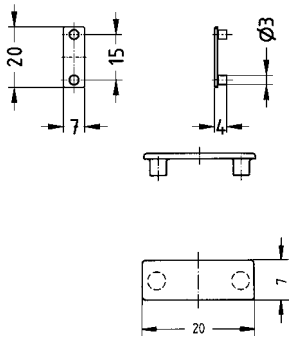
Identification strip Range of delivery: 20 pieces in one block	09 33 000 9982	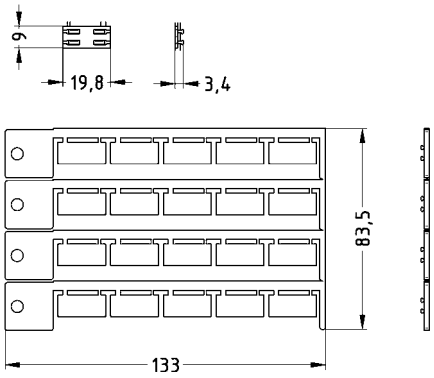

Contents | Page

Plug sockets	**12.3**
Frames	**12.5**
Data connectors	**12.8**
Wires	**12.13**
Gender changer	**12.14**
Accessories	**12.15**

Overview plug sockets

Plug sockets	Germany (VDE)	USA / Euro	USA (NEMA5-15)/ Japan	France (UTE)
Nominal voltage, max.	250 V AC	250 V AC	125 V AC	250 V AC
Nominal frequency	50 Hz AC	60 Hz AC	50 Hz AC	50 Hz AC
Nominal current, max.	10 ... 16 A	15 A	15 A	10 ... 16 A
LED display	Yellow [1)]	-	-	Yellow
Termination	Screw terminal	Screw terminal	Screw terminal	Screw terminal
Mounting depth assembled	approx. 62 mm	approx. 30 mm	approx. 30 mm	approx. 62 mm

Plug sockets	Switzerland	Great Britain (BS)	Italy (CEI 23-16)	Australia / China
Nominal voltage, max.	250 V AC	250 V AC	250 V AC	240 V AC
Nominal frequency	50 Hz AC	50/60 Hz AC	50 Hz AC	50/60 Hz AC
Nominal current, max.	10 A	13 A	10 ... 16 A	15 A
LED display	-	-	-	-
Termination	Spring clamp terminal	Screw terminal	Screw terminal	Screw terminal
Mounting depth assembled	approx. 20 mm	approx. 20 mm	approx. 20 mm	approx. 20 mm

Plug sockets	Denmark	India	Brazil
Nominal voltage, max.	250 V AC	240 V AC	250 V AC
Nominal frequency	50 Hz AC	50 Hz AC	60 Hz AC
Nominal current, max.	13 A	13 A	10 A
LED display	-	-	-
Termination	Spring clamp terminal	Screw terminal	Screw terminal
Mounting depth assembled	approx. 20 mm	approx. 17 mm	approx. 35 mm

1) Yellow plug socket without LED display

Features

- Plug sockets for the European and international market
- Modular assembly
- Plug sockets to mount or snap into mounting plates

Technical characteristics

Material (hoods/housings)	thermoplastic
Colour (hoods/housings)	grey, RAL 1016 (sulphur yellow)
Weight	<36 g
Nominal voltage, max.	250 V, 125 V, 240 V
Nominal frequency	50 Hz, 60 Hz
Nominal current, max.	16 A, 15 A, 13 A, 6 A
Mounting depth	62 mm, 30 mm, 20 mm

Details

For detailed technical characteristics see previous page

Identification	Wire cross section (mm²)	Part number	
Han-Port®, Plug socket, Germany (VDE), with LED display, Screw terminal connection at the rear	– 6	39 50 001 0001	
Han-Port®, Plug socket, USA (NEMA5-15) / Japan, Screw terminal finger safe	– 6	39 50 001 0004	
Han-Port®, Plug socket, France (UTE), Screw terminal connection at the rear	– 6	39 50 001 0005	
Han-Port®, Plug socket, Great Britain (BS), Screw terminal finger safe	– 4	39 50 001 0006	

Plug sockets

Identification	Wire cross section (mm²)	Part number	
Han-Port®, Plug socket, Italy (CEI 23-16), double, Screw terminal finger safe	– 2.5	39 50 001 0007	
Han-Port®, Plug socket, Australia / China, Screw terminal	– 2.5	39 50 001 0009	
Han-Port®, Plug socket, USA / Euro, Screw terminal finger safe	– 6	39 50 001 0010	
Han-Port®, Plug socket, India, Screw terminal	– 4	39 50 001 0321	
Han-Port®, Plug socket, Brazil, Screw terminal	– 2.5	39 50 001 0331	
Han-Port®, Plug socket, Switzerland, Spring clamp terminal	– 1.5	39 50 001 0012	
Han-Port®, Plug socket, Denmark, Spring clamp terminal	– 6	39 50 001 0017	
Han-Port®, Plug socket, Germany (VDE) for assembly in front of main switch connection at the rear	– 6	39 50 001 0002	

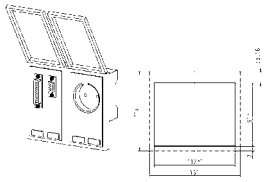

Features

- Suitable for rough industrial environments (degree of protection IP65 with closed cover)
- Modular assembly
- Various mounting plates with plug sockets and data interfaces available

Technical characteristics

Stock temperature	-25 °C ... 60 °C
Degree of protection acc. to IEC 60529	IP65
Material (hoods/housings)	thermoplastic

Specifications and approvals

Identification	Part number	
Han-Port®, single frame, plastic version, PBT black, plastic cover, PC transparent	39 50 000 0300	
Han-Port®, single frame, plastic version, PBT black, plastic cover, ABS metallic silver	39 50 000 0320	
Han-Port®, double frame, plastic version, PBT black, plastic cover, PC transparent	39 50 000 0400	
Han-Port®, double frame, plastic version, PBT black, plastic cover, ABS metallic silver	39 50 000 0420	

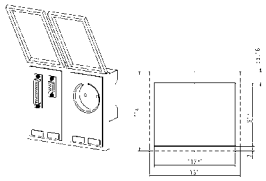

Features

- Suitable for rough industrial environments (degree of protection IP65 with closed cover)
- Modular assembly
- Various mounting plates with plug sockets and data interfaces available

Technical characteristics

Stock temperature	-25 °C ... 60 °C
Degree of protection acc. to IEC 60529	IP65
Material (hoods/housings)	zinc die cast, smoothed surface

Identification	Part number	
Han-Port®, single frame, metal version, nickel plated (electrically conductive), transparent plastic cover	39 50 000 0100	
Han-Port®, double frame, metal version, nickel plated (electrically conductive), transparent plastic cover	39 50 000 0200	

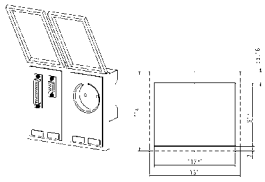

Features

- Suitable for rough industrial environments (degree of protection IP65 with closed cover)
- Modular assembly
- Various mounting plates with plug sockets and data interfaces available

Technical characteristics

Stock temperature	-25 °C ... 60 °C
Degree of protection acc. to IEC 60529	IP65
Material (hoods/housings)	zinc die cast, smoothed surface

Identification	Part number	
Han-Port®, single frame, metal version, nickel plated (electrically conductive), metal cover, nickel plated	39 50 000 0110	
Han-Port®, single frame, metal version, CPD black, metal cover, CPD black	39 50 000 0120	
Han-Port®, double frame, metal version, nickel plated (electrically conductive), metal cover, nickel plated	39 50 000 0210	

Features

- Standard interfaces for easy connection of devices
- Modular assembly
- Assembled data connectors to snap into the frame
- Frames with or without shielding plate

Technical characteristics

Nominal voltage, max.	125 V, 150 V, 50 V, 30 V
Nominal current, max.	3 A, 1 A
Mounting depth	32 mm, 80 mm

Details

D-Sub: < 125 V AC / 150 V DC / 3 A
Mounting depth 32 mm
RJ45: < 50 V AC/DC / 1 A
Mounting depth 32 mm
USB: < 30 V AC/DC / 1 A
Mounting depth 80 mm

Identification	Part number	
Han-Port®, Data connectors, without shielding plate, D-Sub 9 female/male gender changer, D-Sub 9 female/male gender changer, DIN 41652 / IEC 60807-1	39 50 003 0020	
Han-Port®, Data connectors, without shielding plate, D-Sub 9 female/female gender changer, DIN 41652 / IEC 60807-1	39 50 003 0024	
Han-Port®, Data connectors, without shielding plate, D-Sub 9 female/male gender changer, D-Sub 25 female/male gender changer, DIN 41652 / IEC 60807-1	39 50 003 0040	
Han-Port®, Data connectors, without shielding plate, D-Sub 25 female/male gender changer, DIN 41652 / IEC 60807-1	39 50 003 0074	
Han-Port®, Data connectors, without shielding plate, RJ45 female/female gender changer, 8-pins, metal, Cat. 5e, D-Sub 9 female/female gender changer, D-Sub 9 male/male gender changer, DIN 41652 / IEC 60807-1	39 50 003 0111	
Han-Port®, Data connectors, without shielding plate, RJ45 female/female gender changer, 8-pins, metal, Cat. 5e, D-Sub 9 male/male gender changer, D-Sub 9 male/male gender changer, D-Sub 9 male/male gender changer, DIN 41652 / IEC 60807-1	39 50 003 0129	

Identification	Part number	
Han-Port®, Data connectors, without shielding plate, RJ45 female/female gender changer, 8-pins, metal, Cat. 5e, D-Sub 9 female/male gender changer, D-Sub 25 female/male gender changer, DIN 41652 / IEC 60807-1	39 50 003 0170	

Identification	Part number	
Han-Port®, Data connectors, with shielding plate, RJ45 female/female gender changer, 8-pins, metal, Cat. 5e, RJ45 female/female gender changer, 8-pins, metal, Cat. 5e	39 50 002 0120	
Han-Port®, Data connectors, with shielding plate, RJ45 female/female gender changer, 8-pins, metal, Cat. 5e, RJ45 female/female gender changer, 8-pins, metal, Cat. 5e, RJ45 female/female gender changer, 8-pins, metal, Cat. 5e, RJ45 female/female gender changer, 8-pins, metal, Cat. 5e	39 50 002 0122	
Han-Port®, Data connectors, with shielding plate, USB female/female gender changer, size A according to specification 3.0, USB female/female gender changer, size A according to specification 3.0	39 50 002 0093	
Han-Port®, Data connectors, with shielding plate, USB female/female gender changer, size A according to specification 3.0, RJ45 female/female gender changer, 8-pins, metal, Cat. 5e, D-Sub 9 male/male gender changer, D-Sub 9 male/male gender changer	39 50 002 0117	
Han-Port®, Data connectors, with shielding plate, USB female/female gender changer, size A according to specification 3.0, RJ45 female/female gender changer, 8-pins, metal, Cat. 5e, RJ45 female/female gender changer, 8-pins, metal, Cat. 5e	39 50 002 0133	
Han-Port®, Data connectors, with shielding plate, USB female/female gender changer, size A according to specification 3.0, RJ45 female/female gender changer, 8-pins, metal, Cat. 5e, D-Sub 9 female/male gender changer	39 50 002 0143	

Identification	Part number	
Han-Port®, Data connectors, with shielding plate, USB female/female gender changer, size A according to specification 3.0, RJ45 female/female gender changer, 8-pins, metal, Cat. 5e, D-Sub 25 female/male gender changer	39 50 002 0145	
Han-Port®, Data connectors, with shielding plate, RJ45 female/female gender changer, 8-pins, metal, Cat. 5e, RJ45 female/female gender changer, 8-pins, metal, Cat. 5e, D-Sub 9 female/female gender changer	39 50 002 0163	

Identification	Cable length	Part number	
USB, male/male, Patch cable, type A	2 m 5 m	39 50 903 0050 39 50 903 0051	
RJ45, 8-pins, metal, Patch cable, Cat. 5e	2 m 5 m	39 50 903 0060 39 50 903 0061	
D-Sub 9, male/male, Patch cable	2 m 5 m	39 50 903 0010 39 50 903 0011	
D-Sub 9, female/male, Patch cable	2 m 5 m	39 50 903 0020 39 50 903 0021	
D-Sub 25, female/male, Patch cable	1.8 m 5 m	39 50 903 0040 39 50 903 0041	

Gender changer

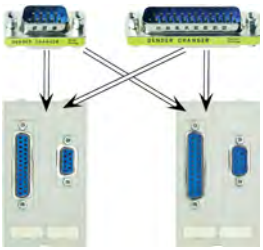

Identification	Part number	
Han-Port®, Gender changer, D-Sub 9, female/female	39 50 904 0030	
Han-Port®, Gender changer, D-Sub 9, female/male	39 50 904 0031	
Han-Port®, Gender changer, D-Sub 9, male/male	39 50 904 0032	
Han-Port®, Gender changer, D-Sub 25, female/female	39 50 904 0050	
Han-Port®, Gender changer, USB female/female gender changer, size A according to specification 3.0	39 50 904 0020	
Han-Port®, Gender changer, RJ45 female/female gender changer, 8-pins, metal, Cat. 5e	39 50 904 0010	

Identification	Part number	
Han-Port®, Blind plate, with perforated cut-outs for gender changer RJ45, USB and D-Sub 25	39 50 000 0851	
Han-Port®, Blind plate, free space for self assembly of connectors or switches: 45 x 75 mm	39 50 000 0890	
Han-Port®, Identification strip Range of delivery: 20 pieces per frame	39 50 000 0900	

Contents | Page

Han® Q 2/0 Crimp	**13.2**
Han® Q 2/0 Crimp High Voltage	**13.4**
Han® Q 2/0 Axial screw	**13.6**
Han® Q 2/0 Axial screw High Voltage	**13.8**
Han® Q 3/0 Crimp	**13.10**
Han® Q 4/0 Crimp	**13.12**
Han® Q 4/2 Crimp	**13.14**
Han® Q 4/2 Axial screw	**13.16**
Han® Q 5/0 Quick Lock	**13.18**
Han® Q 5/0 Crimp	**13.20**
Han® Q 7/0 Crimp	**13.23**
Han® Q 8/0 Quick Lock	**13.25**
Han® Q 8/0 Crimp	**13.27**
Han® Q 12/0 Crimp/Quick Lock	**13.30**
Han® Q 17 Crimp	**13.33**
Han® Q High Density Crimp	**13.35**
Han® Q Data RJ45	**13.37**
Plastic hoods/housings	**13.39**
Hoods/Housings, metal	**13.43**
EMC hoods/housings	**13.47**
Accessories	**13.50**

Features

- High current rated compact designed connector
- Mating compatible to the axial screw version
- Suitable for Han® C crimp contacts
- Allows a cost optimised production of high quantities
- Finger safe male and female contacts
- 16 coding options

Derating

Current carrying capacity

The current carrying capacity of the connectors is limited by the thermal load capability of the contact element material including the connections and the insulating parts. The derating curve is therefore valid for currents which flow constantly (non-intermittent) through each contact element of the connector evenly, without exceeding the allowed maximum temperature.

Measuring and testing techniques acc. to IEC 60512-5-2

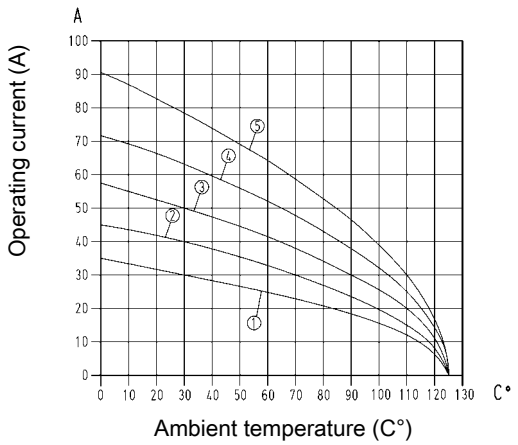

① Wire cross section 1.5 mm²
② Wire cross section 2.5 mm²
③ Wire cross section 4 mm²
④ Wire cross section 6 mm²
⑤ Wire cross section 10 mm²

Technical characteristics

Contacts	2/0
Electrical data acc. to IEC 61984	**40 A 400 V 6 kV 3**
Rated current	40 A
Rated voltage	400 V
Rated impulse voltage	6 kV
Pollution degree	3
Rated voltage acc. to UL	600 V
Rated voltage acc. to CSA	600 V
Insulation resistance	≥10^{10} Ohm
Limiting temperatures	-40 °C ... 125 °C
Flammability (insert) acc. to UL 94	V 0
Mating cycles	≥500
Material (insert)	polycarbonate
Colour (insert)	RAL 7032 (light grey)
Material (contact)	copper alloy

Specifications and approvals

IEC 60664-1
IEC 61984

Details

Crimping tools see chapter 90

Remarks on the crimp technique

The wire gauges mentioned in the catalogue refer to geometric wire gauges of cables.

By using in Han® 3 A HPR hoods/housings the sealing on the insert has to be removed.

Number of contacts

2/0+ ⏚

400 V
40 A

Identification	Wire cross section (mm²)	Part number male	Part number female	Drawing Dimensions in mm
Han® Q, Crimp terminal Please order crimp contacts separately.		09 12 002 3051	09 12 002 3151	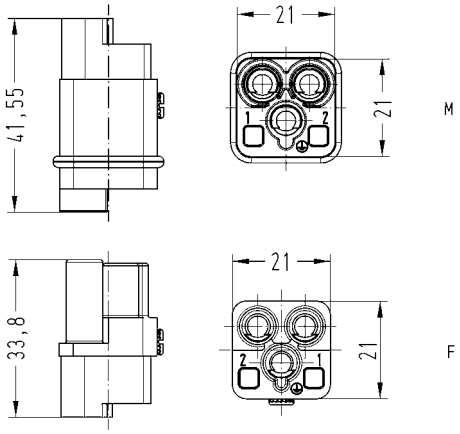 Contact arrangement (view from termination side)
Han® C, Crimp contact, silver plated contacts, contact resistance ≤1 mOhm 	1.5 2.5 4 6 10	09 32 000 6104 09 32 000 6105 09 32 000 6107 09 32 000 6108 09 32 000 6109	09 32 000 6204 09 32 000 6205 09 32 000 6207 09 32 000 6208 09 32 000 6209	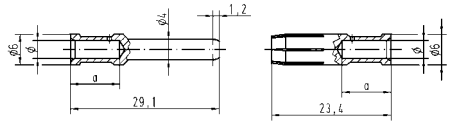 Wire gauge ⌀ Stripping length 1.5 mm² AWG 16 1.75 9.5 mm 2.5 mm² AWG 14 2.25 9.5 mm 4 mm² AWG 12 2.85 9.5 mm 6 mm² AWG 10 3.5 9.5 mm 10 mm² AWG 8 4.3 12 mm
Coding element, plastic 		09 12 000 9922	09 12 000 9922	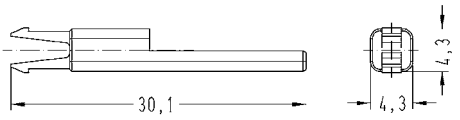

Features

- High current rated compact designed connector
- Mating compatible to the axial screw version
- Suitable for Han® C crimp contacts
- Allows a cost optimised production of high quantities
- Finger safe male and female contacts
- 16 coding options
- For high voltages, please use heat shrink tube (included in delivery range)

Derating

Current carrying capacity

The current carrying capacity of the connectors is limited by the thermal load capability of the contact element material including the connections and the insulating parts. The derating curve is therefore valid for currents which flow constantly (non-intermittent) through each contact element of the connector evenly, without exceeding the allowed maximum temperature.

Measuring and testing techniques acc. to IEC 60512-5-2

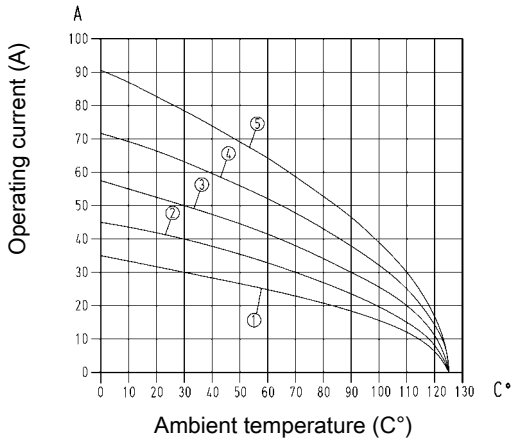

① Wire cross section 1.5 mm²
② Wire cross section 2.5 mm²
③ Wire cross section 4 mm²
④ Wire cross section 6 mm²
⑤ Wire cross section 10 mm²

Technical characteristics

Contacts	2/0
Electrical data acc. to IEC 61984	**40 A 830 V 6 kV 3**
Rated current	40 A
Rated voltage	830 V
Rated impulse voltage	6 kV
Pollution degree	3
Rated voltage acc. to UL	600 V
Rated voltage acc. to CSA	600 V
Insulation resistance	≥10^{10} Ohm
Limiting temperatures	-40 °C ... 125 °C
Flammability (insert) acc. to UL 94	V 0
Mating cycles	≥500
Material (insert)	polycarbonate
Colour (insert)	RAL 7032 (light grey)
Material (contact)	copper alloy

Specifications and approvals

IEC 60664-1
IEC 61984

Details

Crimping tools see chapter 90

Remarks on the crimp technique

The wire gauges mentioned in the catalogue refer to geometric wire gauges of cables.

By using in Han® 3 A HPR hoods/housings the sealing on the insert has to be removed.

Number of contacts

2/0+ ⏚

830 V
40 A

Identification	Wire cross section (mm²)	Part number male	Part number female	Drawing Dimensions in mm
Han® Q, Crimp terminal Range of delivery: with heat shrink tube Please order crimp contacts separately.		09 12 002 3052	09 12 002 3152	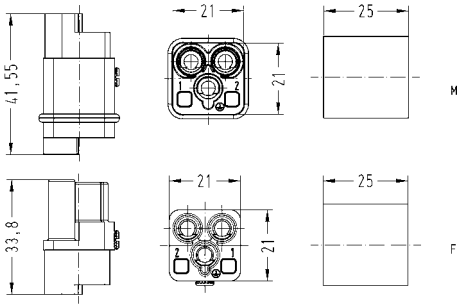 Contact arrangement (view from termination side)
Han® C, Crimp contact, silver plated contacts, contact resistance ≤1 mOhm 	1.5 2.5 4 6 10	09 32 000 6104 09 32 000 6105 09 32 000 6107 09 32 000 6108 09 32 000 6109	09 32 000 6204 09 32 000 6205 09 32 000 6207 09 32 000 6208 09 32 000 6209	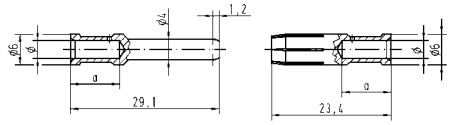 Wire gauge / ø / Stripping length 1.5 mm² AWG 16 / 1.75 / 9.5 mm 2.5 mm² AWG 14 / 2.25 / 9.5 mm 4 mm² AWG 12 / 2.85 / 9.5 mm 6 mm² AWG 10 / 3.5 / 9.5 mm 10 mm² AWG 8 / 4.3 / 12 mm
Coding element, plastic 		09 12 000 9922	09 12 000 9922	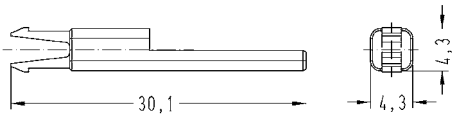

Features

- High current rated compact designed connector
- Mating compatible to the crimp version
- Finger safe male and female contacts
- 16 coding options
- No special tools required for axial-screw termination

Derating

Current carrying capacity

The current carrying capacity of the connectors is limited by the thermal load capability of the contact element material including the connections and the insulating parts. The derating curve is therefore valid for currents which flow constantly (non-intermittent) through each contact element of the connector evenly, without exceeding the allowed maximum temperature.

Measuring and testing techniques acc. to IEC 60512-5-2

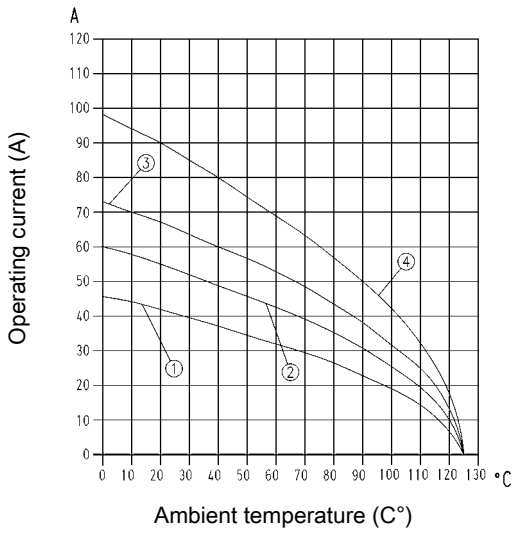

① Wire cross section 2.5 mm²
② Wire cross section 4 mm²
③ Wire cross section 6 mm²
④ Wire cross section 10 mm²

Technical characteristics

Contacts	2/0
Electrical data acc. to IEC 61984	**40 A 400 V 6 kV 3**
Rated current	40 A
Rated voltage	400 V
Rated impulse voltage	6 kV
Pollution degree	3
Rated voltage acc. to UL	400 V
Rated voltage acc. to CSA	400 V
Insulation resistance	≥10^{10} Ohm
Limiting temperatures	-40 °C ... 125 °C
Flammability (insert) acc. to UL 94	V 0
Mating cycles	≥500
Tightening torque	1.8 Nm
Material (insert)	polycarbonate
Colour (insert)	RAL 7032 (light grey)
Material (contact)	copper alloy

Specifications and approvals

IEC 60664-1
IEC 61984

Details

By using in Han® 3 A HPR hoods/housings the sealing on the insert has to be removed.

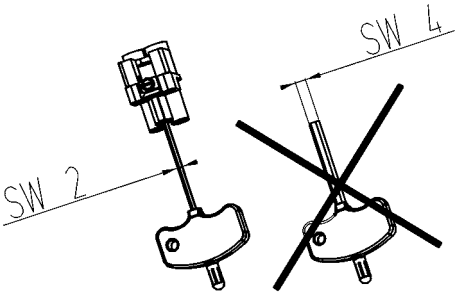

For termination please use only hexagonal screw driver with wrench size SW 2.
If PE contact is not used: Please screw the PE contact maximal on both sides clockwise with a hexagonal screwdriver, wrench size SW 2.

Han® Q 2/0 Axial screw

Size 3 A

Number of contacts

2/0+ ⏚

400 V
40 A

Identification	Wire cross section (mm²)	Part number male	Part number female	Drawing Dimensions in mm
Han® Q, Axial screw terminal, silver plated contacts, contact resistance ≤1 mOhm 	2.5 – 6 4 – 10	09 12 002 2653 09 12 002 2651	09 12 002 2753 09 12 002 2751	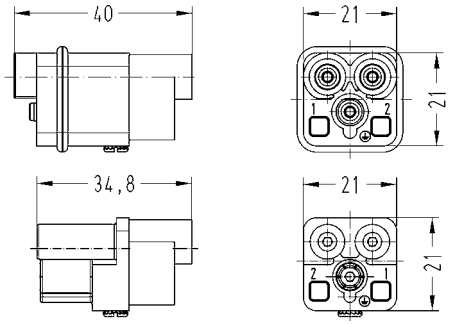 Stripping length 8-9 mm
Coding element, plastic 		09 12 000 9922	09 12 000 9922	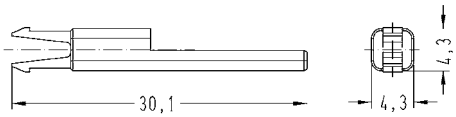

Features

- High current rated compact designed connector
- Mating compatible to the crimp version
- Finger safe male and female contacts
- 16 coding options
- No special tools required for axial-screw termination
- For high voltages, please use heat shrink tube (included in delivery range)

Derating

Current carrying capacity

The current carrying capacity of the connectors is limited by the thermal load capability of the contact element material including the connections and the insulating parts. The derating curve is therefore valid for currents which flow constantly (non-intermittent) through each contact element of the connector evenly, without exceeding the allowed maximum temperature.

Measuring and testing techniques acc. to IEC 60512-5-2

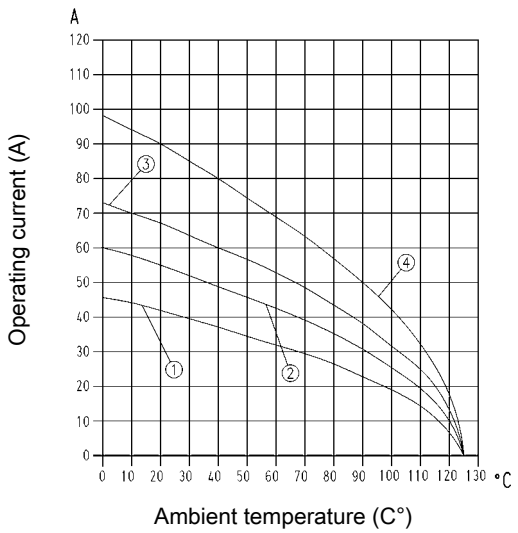

① Wire cross section 2.5 mm²
② Wire cross section 4 mm²
③ Wire cross section 6 mm²
④ Wire cross section 10 mm²

Technical characteristics

Contacts	2/0
Electrical data acc. to IEC 61984	**40 A 830 V 6 kV 3**
Rated current	40 A
Rated voltage	830 V
Rated impulse voltage	6 kV
Pollution degree	3
Rated voltage acc. to UL	600 V
Rated voltage acc. to CSA	600 V
Insulation resistance	≥10^{10} Ohm
Limiting temperatures	-40 °C ... 125 °C
Flammability (insert) acc. to UL 94	V 0
Mating cycles	≥500
Tightening torque	1.8 Nm
Material (insert)	polycarbonate
Colour (insert)	RAL 7032 (light grey)
Material (contact)	copper alloy

Specifications and approvals

IEC 60664-1
IEC 61984

Details

By using in Han® 3 A HPR hoods/housings the sealing on the insert has to be removed.

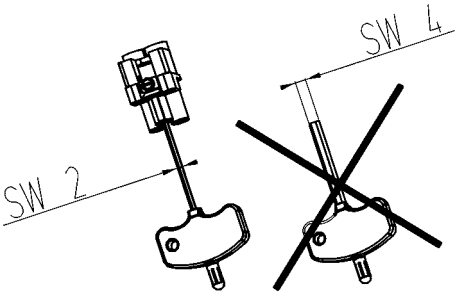

For termination please use only hexagonal screw driver with wrench size SW 2.
If PE contact is not used: Please screw the PE contact maximal on both sides clockwise with a hexagonal screwdriver, wrench size SW 2.

Han® Q 2/0 Axial screw High Voltage

Size 3 A

Number of contacts

2/0+ ⏚

830 V
40 A

Identification	Wire cross section (mm²)	Part number male	Part number female	Drawing Dimensions in mm
Han® Q, Axial screw terminal, silver plated contacts Range of delivery: with heat shrink tube contact resistance ≤1 mOhm 	2.5 – 6 4 – 10	09 12 002 2654 09 12 002 2652	09 12 002 2754 09 12 002 2752	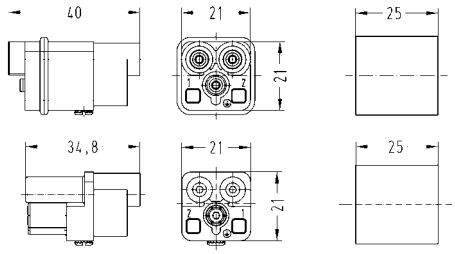 Stripping length 8-9 mm
Coding element, plastic 		09 12 000 9922	09 12 000 9922	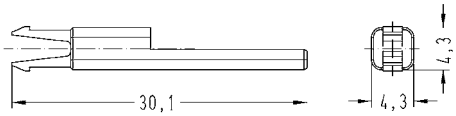

Han Q

Features

- High current rated compact designed connector
- 4 coding options
- Suitable for Han® C crimp contacts
- Finger safe male and female contacts
- Pre-mating PE crimp contact

Derating

Current carrying capacity

The current carrying capacity of the connectors is limited by the thermal load capability of the contact element material including the connections and the insulating parts. The derating curve is therefore valid for currents which flow constantly (non-intermittent) through each contact element of the connector evenly, without exceeding the allowed maximum temperature.

Measuring and testing techniques acc. to IEC 60512-5-2

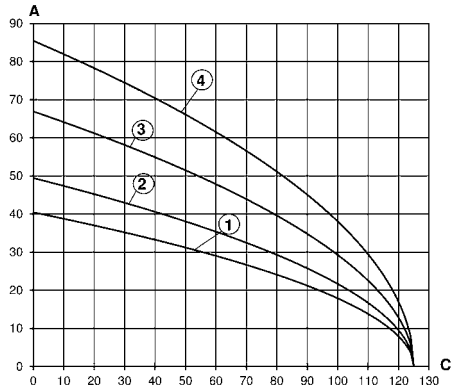

① Wire cross section 2.5 mm²
② Wire cross section 4 mm²
③ Wire cross section 6 mm²
④ Wire cross section 10 mm²

Technical characteristics

Contacts	3/0
Electrical data acc. to IEC 61984	**40 A 400 V 6 kV 3**
Rated current	40 A
Rated voltage	400 V
Rated impulse voltage	6 kV
Pollution degree	3
Insulation resistance	≥10^{10} Ohm
Limiting temperatures	-40 °C ... 125 °C
Flammability (insert) acc. to UL 94	V 0
Mating cycles	≥500
Material (insert)	polycarbonate
Colour (insert)	RAL 7032 (light grey)
Material (contact)	copper alloy

Specifications and approvals

IEC 60664-1
IEC 61984

Details

Crimping tools see chapter 90

Remarks on the crimp technique

The wire gauges mentioned in the catalogue refer to geometric wire gauges of cables.

Number of contacts

3/0+ ⏚

400 V
40 A

Identification	Wire cross section (mm²)	Part number male	Part number female	Drawing Dimensions in mm
Han® Q, Crimp terminal Please order crimp contacts separately.		09 12 003 3051	09 12 003 3151	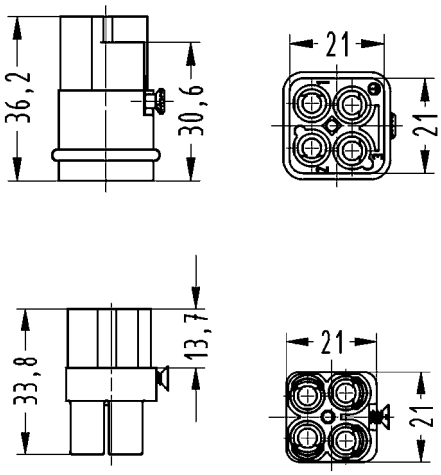
Han® C, Crimp contact, silver plated contacts, contact resistance ≤1 mOhm 	1.5 2.5 4 6 10	09 32 000 6104 09 32 000 6105 09 32 000 6107 09 32 000 6108 09 32 000 6109	09 32 000 6204 09 32 000 6205 09 32 000 6207 09 32 000 6208 09 32 000 6209	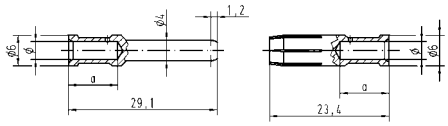 Wire gauge / ø / Stripping length 1.5 mm² AWG 16 / 1.75 / 9.5 mm 2.5 mm² AWG 14 / 2.25 / 9.5 mm 4 mm² AWG 12 / 2.85 / 9.5 mm 6 mm² AWG 10 / 3.5 / 9.5 mm 10 mm² AWG 8 / 4.3 / 12 mm
Coding element, plastic Range of delivery: 20 pieces per frame 		09 12 000 9924	09 12 000 9924	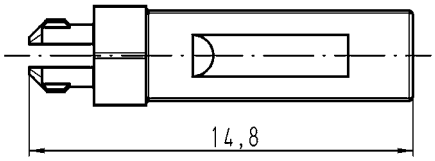

Features

- High current rated compact designed connector
- 4 coding options
- Suitable for Han® C crimp contacts
- Finger safe male and female contacts

Derating

Current carrying capacity

The current carrying capacity of the connectors is limited by the thermal load capability of the contact element material including the connections and the insulating parts. The derating curve is therefore valid for currents which flow constantly (non-intermittent) through each contact element of the connector evenly, without exceeding the allowed maximum temperature.

Measuring and testing techniques acc. to IEC 60512-5-2

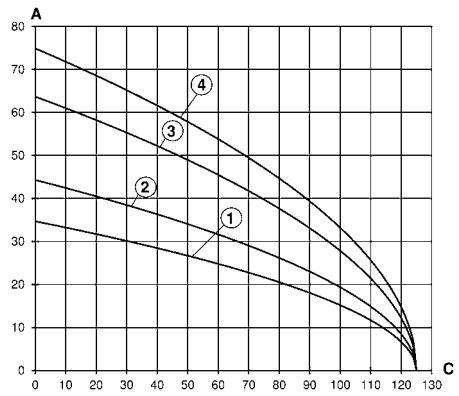

① Wire cross section 2.5 mm²
② Wire cross section 4 mm²
③ Wire cross section 6 mm²
④ Wire cross section 10 mm²

Technical characteristics

Contacts	4/0
Electrical data acc. to IEC 61984	**40 A 830 V 8 kV 3**
Rated current	40 A
Rated voltage	830 V
Rated impulse voltage	8 kV
Pollution degree	3
Insulation resistance	≥10^{10} Ohm
Limiting temperatures	-40 °C ... 125 °C
Flammability (insert) acc. to UL 94	V 0
Mating cycles	≥500
Material (insert)	polycarbonate
Colour (insert)	RAL 7032 (light grey)
Material (contact)	copper alloy

Specifications and approvals

IEC 60664-1
IEC 61984

Details

Attention! Only for thermoplastic hoods/housings!

Crimping tools see chapter 90

Remarks on the crimp technique

The wire gauges mentioned in the catalogue refer to geometric wire gauges of cables.

Number of contacts

4/0

830 V
40 A

Identification	Wire cross section (mm²)	Part number male	Part number female	Drawing Dimensions in mm
Han® Q, Crimp terminal Please order crimp contacts separately.		09 12 004 3051	09 12 004 3151	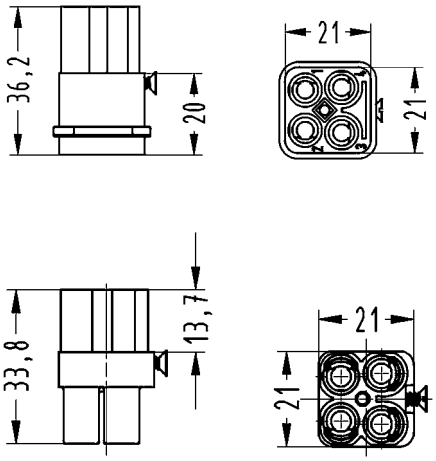
Han® C, Crimp contact, silver plated contacts, contact resistance ≤1 mOhm 	1.5 2.5 4 6 10	09 32 000 6104 09 32 000 6105 09 32 000 6107 09 32 000 6108 09 32 000 6109	09 32 000 6204 09 32 000 6205 09 32 000 6207 09 32 000 6208 09 32 000 6209	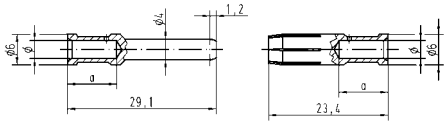 Wire gauge / ø / Stripping length 1.5 mm² AWG 16 / 1.75 / 9.5 mm 2.5 mm² AWG 14 / 2.25 / 9.5 mm 4 mm² AWG 12 / 2.85 / 9.5 mm 6 mm² AWG 10 / 3.5 / 9.5 mm 10 mm² AWG 8 / 4.3 / 12 mm
Coding element, plastic Range of delivery: 20 pieces per frame 		09 12 000 9924	09 12 000 9924	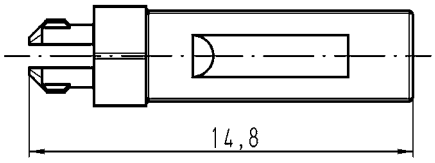

Features

- Han® C power contacts
- Han D® signal contacts
- Finger safe male and female contacts
- Pre-mating PE crimp contact
- 3 coding options by using a coding pin instead of fixing screw
- Insert suitable for standard plastic hoods/housings and metal hoods/housings with additional PE contact of the size Han-Compact®
- Mating compatible to the axial screw version

Derating

Current carrying capacity

The current carrying capacity of the connectors is limited by the thermal load capability of the contact element material including the connections and the insulating parts. The derating curve is therefore valid for currents which flow constantly (non-intermittent) through each contact element of the connector evenly, without exceeding the allowed maximum temperature.

Measuring and testing techniques acc. to IEC 60512-5-2

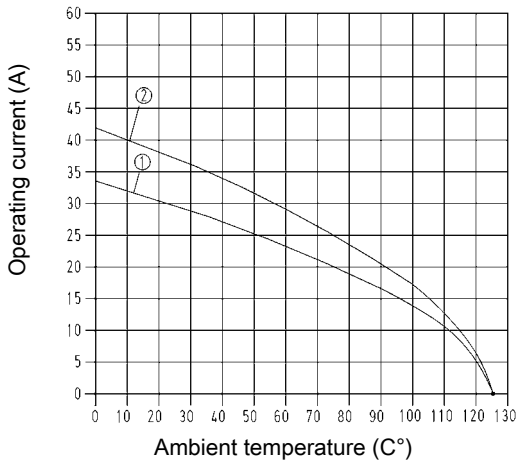

① Wire cross section 2.5 mm²
② Wire cross section 4 mm²

Technical characteristics

Contacts	4/2
Electrical data acc. to IEC 61984	**40 A 400/690 V 6 kV 3**
Rated current	40 A
Rated voltage conductor - ground	400 V
Rated voltage conductor - conductor	690 V
Rated impulse voltage	6 kV
Pollution degree	3
Electrical data, signal	**10 A 250 V 4 kV 3**
Rated current	10 A
Rated voltage	250 V
Rated impulse voltage	4 kV
Rated voltage acc. to UL	600 V
Rated voltage acc. to UL, signal	250 V
Rated voltage acc. to CSA	600 V
Rated voltage acc. to CSA, signal	250 V
Insulation resistance	≥10^{10} Ohm
Limiting temperatures	-40 °C ... 125 °C
Flammability (insert) acc. to UL 94	V 0
Mating cycles	≥500
Material (insert)	polycarbonate
Colour (insert)	RAL 7032 (light grey)
Material (contact)	copper alloy

Specifications and approvals

IEC 60664-1
IEC 61984

Details

Crimping tools see chapter 90

Remarks on the crimp technique

The wire gauges mentioned in the catalogue refer to geometric wire gauges of cables.

Number of contacts

4/2+ ⏚

400/690 V / 250 V
40 A/10 A

Identification	Wire cross section (mm²)	Part number male	Part number female	Drawing Dimensions in mm
Han® Q, Crimp terminal Please order crimp contacts separately.	1.5 – 6	09 12 006 3041	09 12 006 3141	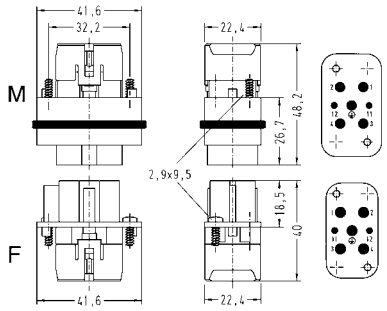 Contact arrangement (view from termination side)
Han D®, Crimp contact, gold plated contacts, contact resistance ≤3 mOhm 	0.14 – 0.37 0.5 0.75 1 1.5 2.5	09 15 000 6124 09 15 000 6123 09 15 000 6125 09 15 000 6122 09 15 000 6121 09 15 000 6126	09 15 000 6224 09 15 000 6223 09 15 000 6225 09 15 000 6222 09 15 000 6221 09 15 000 6226	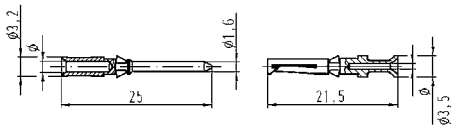 Wire gauge / ⌀ / Stripping length 0.14-0.37 mm² AWG 26-22 / 0.9 mm / 8 mm 0.5 mm² AWG 20 / 1.1 mm / 8 mm 0.75 mm² AWG 18 / 1.3 mm / 8 mm 1 mm² AWG 18 / 1.45 mm / 8 mm 1.5 mm² AWG 16 / 1.75 mm / 8 mm 2.5 mm² AWG 14 / 2.25 mm / 6 mm
Han D®, Crimp contact, silver plated contacts, contact resistance ≤3 mOhm 	0.14 – 0.37 0.5 0.75 1 1.5 2.5	09 15 000 6104 09 15 000 6103 09 15 000 6105 09 15 000 6102 09 15 000 6101 09 15 000 6106	09 15 000 6204 09 15 000 6203 09 15 000 6205 09 15 000 6202 09 15 000 6201 09 15 000 6206	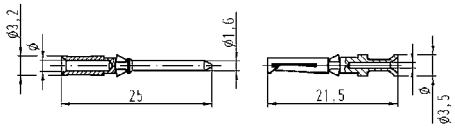 Wire gauge / ⌀ / Stripping length 0.14-0.37 mm² AWG 26-22 / 0.9 mm / 8 mm 0.5 mm² AWG 20 / 1.1 mm / 8 mm 0.75 mm² AWG 18 / 1.3 mm / 8 mm 1 mm² AWG 18 / 1.45 mm / 8 mm 1.5 mm² AWG 16 / 1.75 mm / 8 mm 2.5 mm² AWG 14 / 2.25 mm / 6 mm
Han® C, Crimp contact, silver plated contacts, contact resistance ≤1 mOhm 	1.5 2.5 4 6	09 32 000 6104 09 32 000 6105 09 32 000 6107 09 32 000 6108	09 32 000 6204 09 32 000 6205 09 32 000 6207 09 32 000 6208	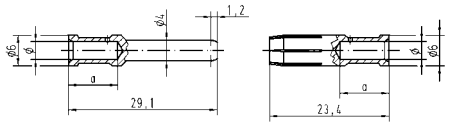 Wire gauge / ⌀ / Stripping length 1.5 mm² AWG 16 / 1.75 / 9.5 mm 2.5 mm² AWG 14 / 2.25 / 9.5 mm 4 mm² AWG 12 / 2.85 / 9.5 mm 6 mm² AWG 10 / 3.5 / 9.5 mm 10 mm² AWG 8 / 4.3 / 12 mm

Features

- Compact design saves space
- No special tools required
- Mating compatible to the crimp version
- Insert suitable for standard plastic hoods/housings and metal hoods/housings with additional PE contact of the size Han-Compact®
- With or without Han-Quick Lock® signal contacts

Derating

Current carrying capacity

The current carrying capacity of the connectors is limited by the thermal load capability of the contact element material including the connections and the insulating parts. The derating curve is therefore valid for currents which flow constantly (non-intermittent) through each contact element of the connector evenly, without exceeding the allowed maximum temperature.

Measuring and testing techniques acc. to IEC 60512-5-2

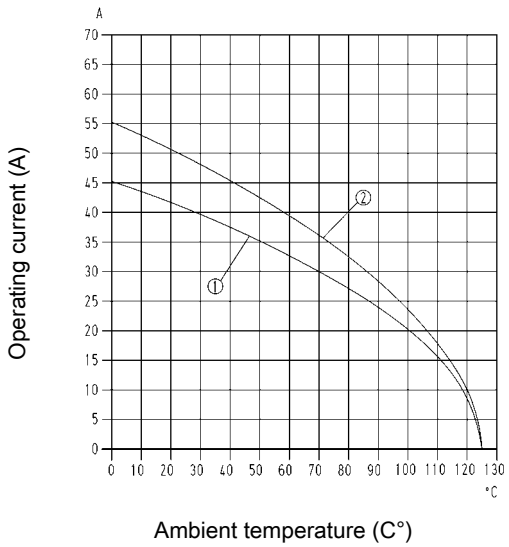

① Wire cross section 4 mm²
② Wire cross section 6 mm²

Technical characteristics

Contacts	4/2
Electrical data acc. to IEC 61984	**40 A 400/690 V 6 kV 3**
Rated current	40 A
Rated voltage conductor - ground	400 V
Rated voltage conductor - conductor	690 V
Rated impulse voltage	6 kV
Pollution degree	3
Electrical data, signal	**10 A 250 V 4 kV 3**
Rated current	10 A
Rated voltage	250 V
Rated impulse voltage	4 kV
Insulation resistance	≥10^{10} Ohm
Limiting temperatures	-40 °C ... 125 °C
Flammability (insert) acc. to UL 94	V 0
Mating cycles	≥500
Tightening torque	1.8 Nm
Degree of protection acc. to IEC 60529	IP65
Material (insert)	polycarbonate
Colour (insert)	RAL 7032 (light grey)
Material (contact)	copper alloy

Specifications and approvals

IEC 60664-1
IEC 61984

Details

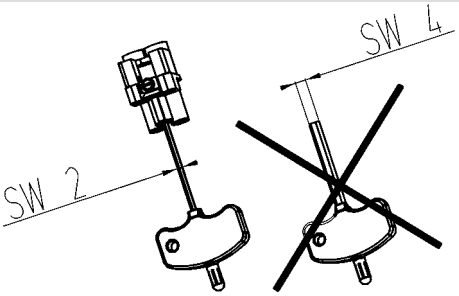

For termination please use only hexagonal screw driver with wrench size SW 2.
If PE contact is not used: Please screw the PE contact maximal on both sides clockwise with a hexagonal screwdriver, wrench size SW 2.

Number of contacts

4/2+ ⏚

400/690 V / 250 V
40 A/10 A

Identification	Wire cross section (mm²)	Part number male	Part number female	Drawing Dimensions in mm
Han-Quick Lock® Han® Q, Axial screw terminal, silver plated contacts, contact resistance ≤0.3 mOhm contact resistance, signal <3 mOhm with Han-Quick Lock® signal contacts	2.5 – 6 4 – 10	09 12 006 2662 09 12 006 2663	09 12 006 2762 09 12 006 2763	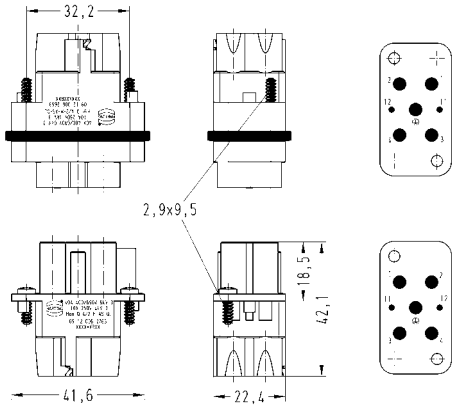 Stripping length Power contacts 8 mm Stripping length Signal contacts 10 mm
Han® Q, Axial screw terminal, silver plated contacts, contact resistance ≤0.3 mOhm without signal contacts	2.5 – 6 4 – 10	09 12 006 2665 09 12 006 2666	09 12 006 2765 09 12 006 2766	

Features

- Innovative Han-Quick Lock® termination technology with reduced wiring times
- No special tools required
- Mating compatible to the crimp version
- Vibration and shock resistant

Derating

Current carrying capacity

The current carrying capacity of the connectors is limited by the thermal load capability of the contact element material including the connections and the insulating parts. The derating curve is therefore valid for currents which flow constantly (non-intermittent) through each contact element of the connector evenly, without exceeding the allowed maximum temperature.

Measuring and testing techniques acc. to IEC 60512-5-2

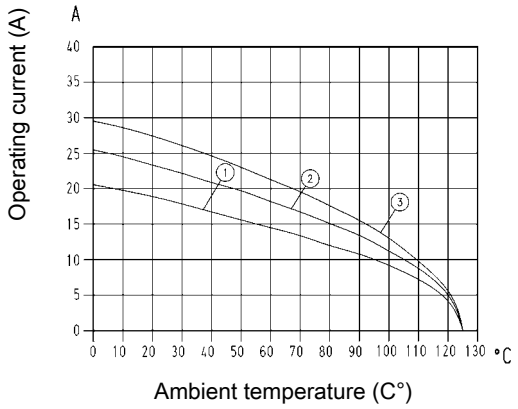

① Wire cross section 1 mm²
② Wire cross section 1.5 mm²
③ Wire cross section 2.5 mm²

Technical characteristics

Contacts	5/0
Electrical data acc. to IEC 61984	**blue slide** **16 A 230/400 V 4 kV 3** **black slide** **16 A 230/400 V 4 kV 3**
Rated current	16 A
Rated voltage conductor - ground	230 V
Rated voltage conductor - conductor	400 V
Rated impulse voltage	4 kV
Pollution degree	3
Rated voltage acc. to UL	600 V
Rated voltage acc. to CSA	600 V
Insulation resistance	≥10^{10} Ohm
Limiting temperatures	-40 °C ... 125 °C
Flammability (insert) acc. to UL 94	V 0
Mating cycles	≥500
Degree of protection acc. to IEC 60529	IP65 / IP67
Material (insert)	polycarbonate
Colour (insert)	RAL 7032 (light grey)
Material (contact)	copper alloy

Specifications and approvals

IEC 60664-1
IEC 61984

Details

By using in Han® 3 A HPR hoods/housings the sealing on the insert has to be removed.

Number of contacts

5/0+ ⏚

230/400 V
16 A

Identification	Wire cross section (mm²)	Part number male	Part number female	Drawing Dimensions in mm
Han-Quick Lock® Han® Q, Han-Quick Lock® termination, blue slide, silver plated contacts, contact resistance ≤1 mOhm 	0.5 – 2.5	09 12 005 2633	09 12 005 2733	M 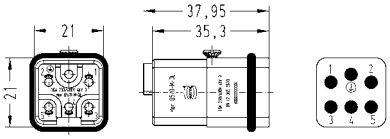 F 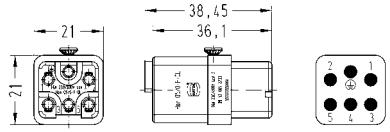
Han-Quick Lock® Han® Q, Han-Quick Lock® termination, black slide, silver plated contacts, contact resistance ≤1 mOhm 	0.25 – 1.5	09 12 005 2634	09 12 005 2734	

Features

- Compact design saves space
- Suitable for Han E® crimp contacts
- Leading protective ground contact with screw terminal

Derating

Current carrying capacity

The current carrying capacity of the connectors is limited by the thermal load capability of the contact element material including the connections and the insulating parts. The derating curve is therefore valid for currents which flow constantly (non-intermittent) through each contact element of the connector evenly, without exceeding the allowed maximum temperature.

Measuring and testing techniques acc. to IEC 60512-5-2

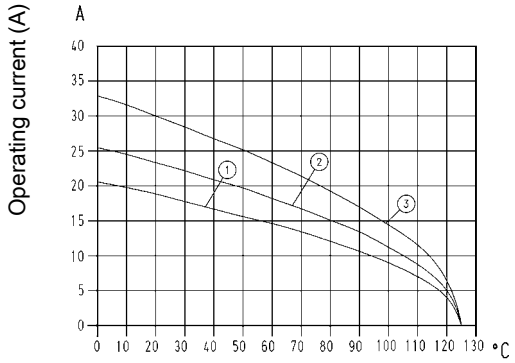

Ambient temperature (C°)

① Wire cross section 1 mm²
② Wire cross section 1.5 mm²
③ Wire cross section 2.5 mm²

Technical characteristics

Contacts	5/0
Electrical data acc. to IEC 61984	**16 A 230/400 V 4 kV 3**
Rated current	16 A
Rated voltage conductor - ground	230 V
Rated voltage conductor - conductor	400 V
Rated impulse voltage	4 kV
Pollution degree	3
Rated voltage acc. to UL	600 V
Rated voltage acc. to CSA	600 V
Insulation resistance	≥10^{10} Ohm
Limiting temperatures	-40 °C ... 125 °C
Flammability (insert) acc. to UL 94	V 0
Mating cycles	≥500
Degree of protection acc. to IEC 60529	IP65 / IP67
Material (insert)	polycarbonate
Colour (insert)	RAL 7032 (light grey)
Material (contact)	copper alloy

Specifications and approvals

IEC 60664-1
IEC 61984

Details

Crimping tools see chapter 90

Remarks on the crimp technique

The wire gauges mentioned in the catalogue refer to geometric wire gauges of cables.

By using in Han® 3 A HPR hoods/housings the sealing on the insert has to be removed.

Coding pin

Use of the coding pin prevents incorrect mating to other connectors of the same type. The male pin should be omitted from the opposing cavity in the male insert.

Number of contacts

5/0+ ⏚

230/400 V
16 A

Identification	Wire cross section (mm²)	Part number male	Part number female	Drawing Dimensions in mm
Han® Q, Crimp terminal Please order crimp contacts separately.		09 12 005 3001	09 12 005 3101	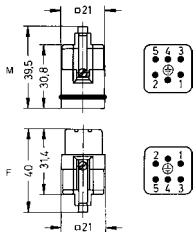 Contact arrangement (view from termination side)
Han E®, Crimp contact, gold plated contacts, contact resistance ≤1 mOhm 	0.14 – 0.37 0.5 0.75 1 1.5 2.5	09 33 000 6117 09 33 000 6122 09 33 000 6115 09 33 000 6118 09 33 000 6116 09 33 000 6123	09 33 000 6217 09 33 000 6222 09 33 000 6215 09 33 000 6218 09 33 000 6216 09 33 000 6223	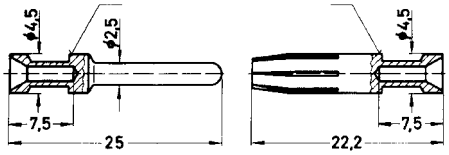
Han E®, Crimp contact, silver plated contacts, contact resistance ≤1 mOhm 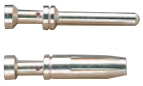	0.14 – 0.37 0.5 0.75 1 1.5 2.5	09 33 000 6127 09 33 000 6121 09 33 000 6114 09 33 000 6105 09 33 000 6104 09 33 000 6102	09 33 000 6227 09 33 000 6220 09 33 000 6214 09 33 000 6205 09 33 000 6204 09 33 000 6202	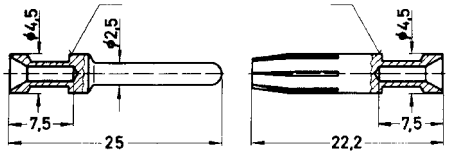 Identification / Wire gauge / Stripping length no groove — 0.14-0.37 mm² — AWG 26-22 — 7.5 mm no groove — 0.5 mm² — AWG 20 — 7.5 mm 1 groove* — 0.75 mm² — AWG 18 — 7.5 mm 1 groove — 1 mm² — AWG 18 — 7.5 mm 2 grooves — 1.5 mm² — AWG 16 — 7.5 mm 3 grooves — 2.5 mm² — AWG 14 — 7.5 mm wide groove — 3 mm² — AWG 12 — 7.5 mm no groove — 4 mm² — AWG 12 — 7.5 mm * on the back crimp collar
Han E®, Relay contact, silver plated contacts, contact resistance ≤1 mOhm 	0.75 – 1 1.5 2.5	09 33 000 6109 09 33 000 6110 09 33 000 6111		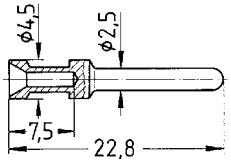 Stripping length 7.5 mm
Han E®, F.O. contact for 1 mm plastic fibre		20 10 001 3311	20 10 001 3321	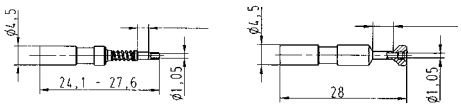 Crimp zone

Han Q

Identification	Wire cross section (mm²)	Part number male	Part number female	Drawing Dimensions in mm
Han E®, Han® EE, Han® EEE, Coding pin, plastic for crimp inserts only			09 33 000 9954	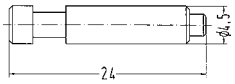

Features

- Compact design saves space
- Suitable for Han D® crimp contacts
- Leading protective ground contact with screw terminal
- 6 coding options

Derating

Current carrying capacity

The current carrying capacity of the connectors is limited by the thermal load capability of the contact element material including the connections and the insulating parts. The derating curve is therefore valid for currents which flow constantly (non-intermittent) through each contact element of the connector evenly, without exceeding the allowed maximum temperature.

Measuring and testing techniques acc. to IEC 60512-5-2

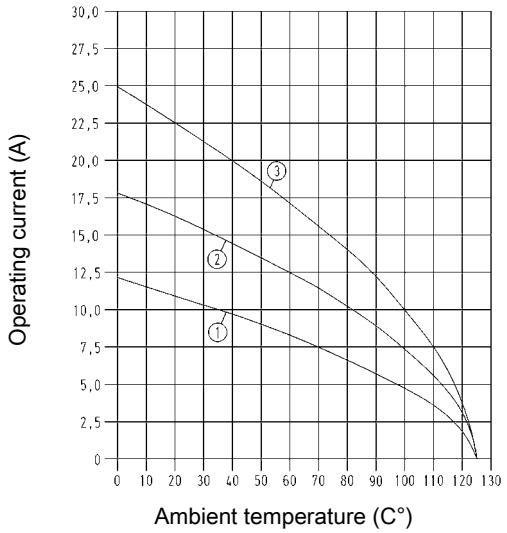

① Wire cross section 0.75 mm²
② Wire cross section 1.5 mm²
③ Wire cross section 2.5 mm²

Technical characteristics

Contacts	7/0
Electrical data acc. to IEC 61984	**10 A 400 V 6 kV 3**
Rated current	10 A
Rated voltage	400 V
Rated impulse voltage	6 kV
Pollution degree	3
Rated voltage acc. to UL	600 V
Rated voltage acc. to CSA	600 V
Insulation resistance	≥10^{10} Ohm
Limiting temperatures	-40 °C ... 125 °C
Flammability (insert) acc. to UL 94	V 0
Mating cycles	≥500
Degree of protection acc. to IEC 60529	IP65 / IP67
Material (insert)	polycarbonate
Colour (insert)	RAL 7032 (light grey)
Material (contact)	copper alloy

Specifications and approvals

IEC 60664-1
IEC 61984

Details

Crimping tools see chapter 90

Remarks on the crimp technique

The wire gauges mentioned in the catalogue refer to geometric wire gauges of cables.

By using in Han® 3 A HPR hoods/housings the sealing on the insert has to be removed.

Number of contacts

7/0+ ⏚

400 V
10 A

Identification	Wire cross section (mm²)	Part number male	Part number female	Drawing Dimensions in mm
Han® Q, Crimp terminal Please order crimp contacts separately.		09 12 007 3001	09 12 007 3101	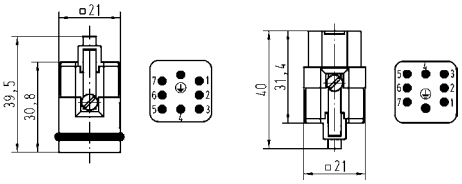 Contact arrangement (view from termination side)
Han D®, Crimp contact, gold plated contacts, contact resistance ≤3 mOhm 	0.14 – 0.37 0.5 0.75 1 1.5 2.5	09 15 000 6124 09 15 000 6123 09 15 000 6125 09 15 000 6122 09 15 000 6121 09 15 000 6126	09 15 000 6224 09 15 000 6223 09 15 000 6225 09 15 000 6222 09 15 000 6221 09 15 000 6226	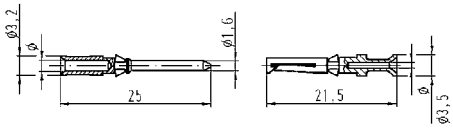 Wire gauge / ⌀ / Stripping length 0.14-0.37 mm² AWG 26-22 / 0.9 mm / 8 mm 0.5 mm² AWG 20 / 1.1 mm / 8 mm 0.75 mm² AWG 18 / 1.3 mm / 8 mm 1 mm² AWG 18 / 1.45 mm / 8 mm 1.5 mm² AWG 16 / 1.75 mm / 8 mm 2.5 mm² AWG 14 / 2.25 mm / 6 mm
Han D®, Crimp contact, silver plated contacts, contact resistance ≤3 mOhm 	0.14 – 0.37 0.5 0.75 1 1.5 2.5	09 15 000 6104 09 15 000 6103 09 15 000 6105 09 15 000 6102 09 15 000 6101 09 15 000 6106	09 15 000 6204 09 15 000 6203 09 15 000 6205 09 15 000 6202 09 15 000 6201 09 15 000 6206	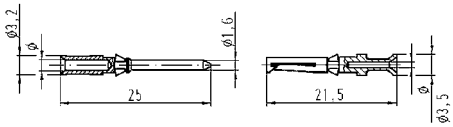 Wire gauge / ⌀ / Stripping length 0.14-0.37 mm² AWG 26-22 / 0.9 mm / 8 mm 0.5 mm² AWG 20 / 1.1 mm / 8 mm 0.75 mm² AWG 18 / 1.3 mm / 8 mm 1 mm² AWG 18 / 1.45 mm / 8 mm 1.5 mm² AWG 16 / 1.75 mm / 8 mm 2.5 mm² AWG 14 / 2.25 mm / 6 mm
F.O. contact for 1 mm plastic fibre		20 10 001 3211	20 10 001 3221	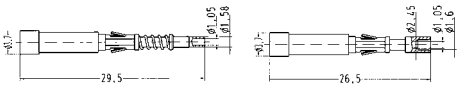 20 10 001 3211 + 20 10 001 3221
Coding element, plastic 		09 12 000 9901	09 12 000 9902	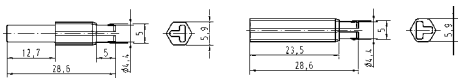

Han Q

Features

- Innovative Han-Quick Lock® termination technology with reduced wiring times
- No special tools required
- Mating compatible to the crimp version
- Insert suitable for standard plastic hoods/housings and metal hoods/housings with additional PE contact of the size Han-Compact®
- Pre-mating PE crimp contact

Derating

Current carrying capacity

The current carrying capacity of the connectors is limited by the thermal load capability of the contact element material including the connections and the insulating parts. The derating curve is therefore valid for currents which flow constantly (non-intermittent) through each contact element of the connector evenly, without exceeding the allowed maximum temperature.

Measuring and testing techniques acc. to IEC 60512-5-2

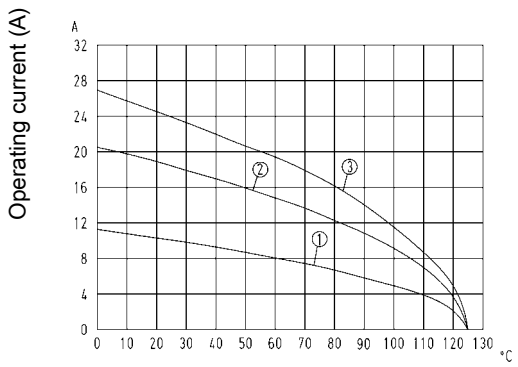

Ambient temperature (C°)

① Wire cross section 0.5 mm²
② Wire cross section 1.5 mm²
③ Wire cross section 2.5 mm²

Technical characteristics

Contacts	8/0
Electrical data acc. to IEC 61984	**blue slide** **16 A 500 V 6 kV 3** **black slide** **16 A 500 V 6 kV 3**
Rated current	16 A
Rated voltage	500 V
Rated impulse voltage	6 kV
Pollution degree	3
Rated voltage acc. to UL	600 V
Rated voltage acc. to CSA	600 V
Insulation resistance	≥10^{10} Ohm
Limiting temperatures	-40 °C ... 125 °C
Flammability (insert) acc. to UL 94	V 0
Mating cycles	≥500
Material (insert)	polycarbonate
Colour (insert)	RAL 7032 (light grey)
Material (contact)	copper alloy

Specifications and approvals

IEC 60664-1
IEC 61984

Number of contacts

8/0+ ⏚

500 V
16 A

Identification	Wire cross section (mm²)	Part number male	Part number female	Drawing Dimensions in mm
Han-Quick Lock® Han® Q, Han-Quick Lock®, blue slide, silver plated contacts, contact resistance ≤3 mOhm 	0.5 – 2.5	09 12 008 2633	09 12 008 2733	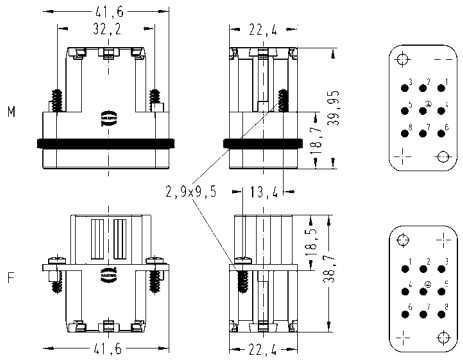
Han-Quick Lock® Han® Q, Han-Quick Lock®, black slide, silver plated contacts, contact resistance ≤3 mOhm	0.25 – 1.5	09 12 008 2634	09 12 008 2734	

Han Q

Features

- Compact design saves space
- Suitable for Han E® crimp contacts
- Pre-mating PE crimp contact
- ISO 23570 / DESINA conform product

Derating

Current carrying capacity

The current carrying capacity of the connectors is limited by the thermal load capability of the contact element material including the connections and the insulating parts. The derating curve is therefore valid for currents which flow constantly (non-intermittent) through each contact element of the connector evenly, without exceeding the allowed maximum temperature.

Measuring and testing techniques acc. to IEC 60512-5-2

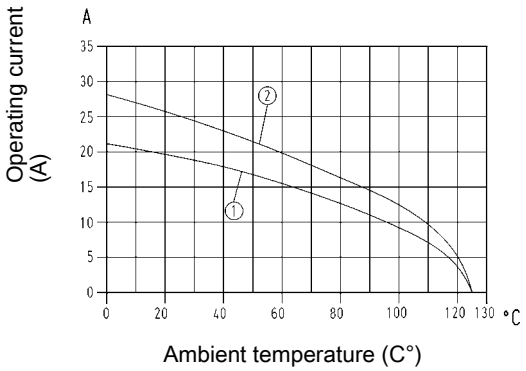

① Wire cross section 1.5 mm²
② Wire cross section 2.5 mm²

Technical characteristics

Contacts	8/0
Electrical data acc. to IEC 61984	**16 A 500 V 6 kV 3**
Rated current	16 A
Rated voltage	500 V
Rated impulse voltage	6 kV
Pollution degree	3
Rated voltage acc. to UL	600 V
Rated voltage acc. to CSA	600 V
Insulation resistance	≥10^{10} Ohm
Limiting temperatures	-40 °C ... 125 °C
Flammability (insert) acc. to UL 94	V 0
Mating cycles	≥500
Material (insert)	polycarbonate
Colour (insert)	RAL 7032 (light grey)
Material (contact)	copper alloy

Specifications and approvals

IEC 60664-1
IEC 61984

Details

Crimping tools see chapter 90

Remarks on the crimp technique

The wire gauges mentioned in the catalogue refer to geometric wire gauges of cables.

Coding pin

Use of the coding pin prevents incorrect mating to other connectors of the same type. The male pin should be omitted from the opposing cavity in the male insert.

Number of contacts

8/0+ ⏚

500 V
16 A

Identification	Wire cross section (mm²)	Part number male	Part number female	Drawing Dimensions in mm
Han® Q, Crimp terminal Please order crimp contacts separately.		09 12 008 3001	09 12 008 3101	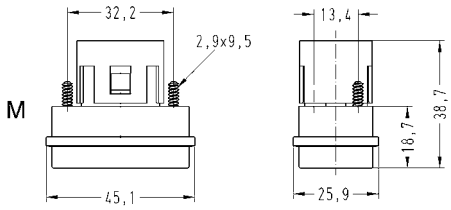 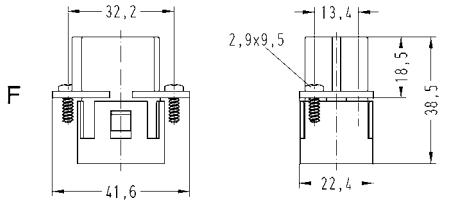 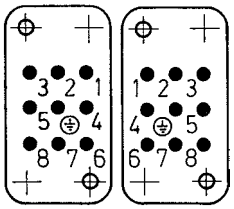 Contact arrangement (view from termination side)
Han E®, Crimp contact, gold plated contacts, contact resistance ≤1 mOhm 	0.14 – 0.37 0.5 0.75 1 1.5 2.5 4	09 33 000 6117 09 33 000 6122 09 33 000 6115 09 33 000 6118 09 33 000 6116 09 33 000 6123 09 33 000 6119	09 33 000 6217 09 33 000 6222 09 33 000 6215 09 33 000 6218 09 33 000 6216 09 33 000 6223 09 33 000 6221	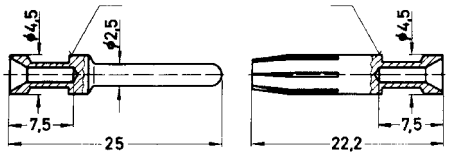

Identification	Wire gauge		Stripping length
no groove	0.14-0.37 mm²	AWG 26-22	7.5 mm
no groove	0.5 mm²	AWG 20	7.5 mm
1 groove*	0.75 mm²	AWG 18	7.5 mm
1 groove	1 mm²	AWG 18	7.5 mm
2 grooves	1.5 mm²	AWG 16	7.5 mm
3 grooves	2.5 mm²	AWG 14	7.5 mm
wide groove	3 mm²	AWG 12	7.5 mm
no groove	4 mm²	AWG 12	7.5 mm

* on the back crimp collar

Identification	Wire cross section (mm²)	Part number male	Part number female	Drawing Dimensions in mm
Han E®, Crimp contact, silver plated contacts, contact resistance ≤1 mOhm	0.14 – 0.37 0.5 0.75 1 1.5 2.5 4	09 33 000 6127 09 33 000 6121 09 33 000 6114 09 33 000 6105 09 33 000 6104 09 33 000 6102 09 33 000 6107	09 33 000 6227 09 33 000 6220 09 33 000 6214 09 33 000 6205 09 33 000 6204 09 33 000 6202 09 33 000 6207	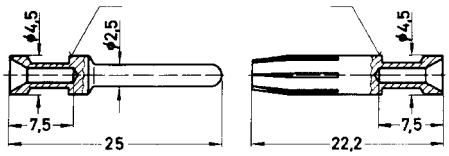
Han E®, Relay contact, silver plated contacts, contact resistance ≤1 mOhm	0.75 – 1 1.5 2.5	09 33 000 6109 09 33 000 6110 09 33 000 6111		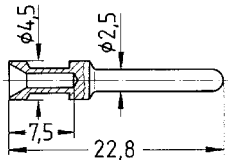 Stripping length 7.5 mm
Han E®, F.O. contact for 1 mm plastic fibre		20 10 001 3311	20 10 001 3321	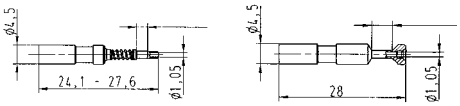 Crimp zone
Han E®, Han® EE, Han® EEE, Coding pin, plastic for crimp inserts only			09 33 000 9954	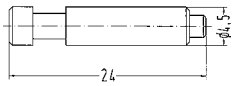

Identification	Wire gauge		Stripping length
no groove	0.14-0.37 mm²	AWG 26-22	7.5 mm
no groove	0.5 mm²	AWG 20	7.5 mm
1 groove*	0.75 mm²	AWG 18	7.5 mm
1 groove	1 mm²	AWG 18	7.5 mm
2 grooves	1.5 mm²	AWG 16	7.5 mm
3 grooves	2.5 mm²	AWG 14	7.5 mm
wide groove	3 mm²	AWG 12	7.5 mm
no groove	4 mm²	AWG 12	7.5 mm

* on the back crimp collar

Features

- Suitable for Han D® crimp contacts
- PE contact with Han-Quick Lock® termination technology
- 16 coding options without loss of contacts

Derating

Current carrying capacity

The current carrying capacity of the connectors is limited by the thermal load capability of the contact element material including the connections and the insulating parts. The derating curve is therefore valid for currents which flow constantly (non-intermittent) through each contact element of the connector evenly, without exceeding the allowed maximum temperature.

Measuring and testing techniques acc. to IEC 60512-5-2

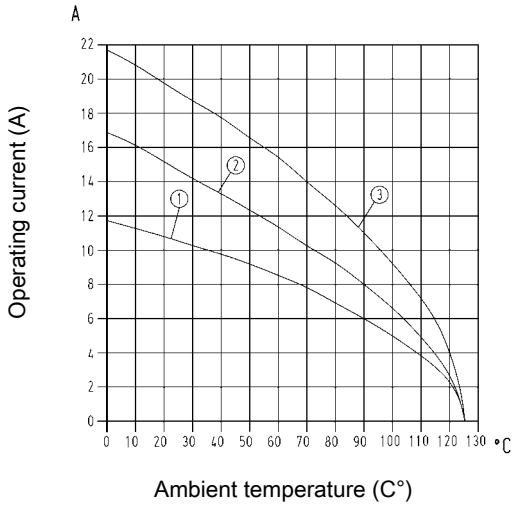

① Wire cross section 0.75 mm²
② Wire cross section 1.5 mm²
③ Wire cross section 2.5 mm²

Technical characteristics

Contacts	12/0
Electrical data acc. to IEC 61984	**blue slide** **10 A 400 V 6 kV 3** **black slide** **10 A 400 V 6 kV 3**
Rated current	10 A
Rated voltage	400 V
Rated impulse voltage	6 kV
Pollution degree	3
Insulation resistance	≥10^{10} Ohm
Limiting temperatures	-40 °C ... 125 °C
Flammability (insert) acc. to UL 94	V 0
Mating cycles	≥500
Material (insert)	polycarbonate
Colour (insert)	RAL 7032 (light grey)
Material (contact)	copper alloy

Specifications and approvals

IEC 60664-1
IEC 61984

Details

Crimping tools see chapter 90

Remarks on the crimp technique

The wire gauges mentioned in the catalogue refer to geometric wire gauges of cables.

By using in Han® 3 A HPR hoods/housings the sealing on the insert has to be removed.

Number of contacts

12/0+ ⏚

400 V
10 A

Identification	Wire cross section (mm²)	Part number male	Part number female	Drawing Dimensions in mm
Han-Quick Lock® Han® Q, Crimp termination/Han-Quick Lock®, blue slide Please order crimp contacts separately.		09 12 012 3001	09 12 012 3101	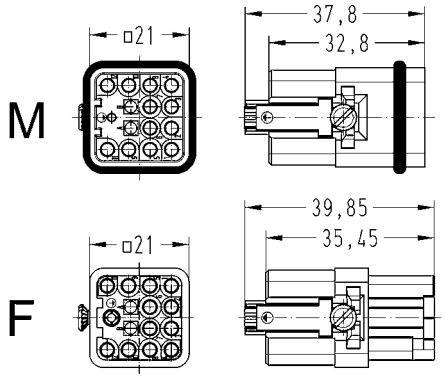 PE contact : Wire cross section blue slide 0.5 ... 2.5 PE contact : Wire cross section black slide 0.25 ... 1.5
Han-Quick Lock® Han® Q, Crimp termination/Han-Quick Lock®, black slide Please order crimp contacts separately.		09 12 012 3004	09 12 012 3104	
Han D®, Crimp contact, gold plated contacts, contact resistance ≤3 mOhm 	0.14 – 0.37 0.5 0.75 1 1.5 2.5	09 15 000 6124 09 15 000 6123 09 15 000 6125 09 15 000 6122 09 15 000 6121 09 15 000 6126	09 15 000 6224 09 15 000 6223 09 15 000 6225 09 15 000 6222 09 15 000 6221 09 15 000 6226	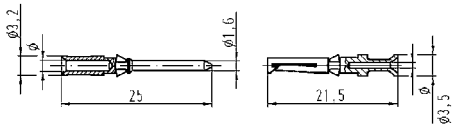

Wire gauge		⌀	Stripping length
0.14-0.37 mm²	AWG 26-22	0.9 mm	8 mm
0.5 mm²	AWG 20	1.1 mm	8 mm
0.75 mm²	AWG 18	1.3 mm	8 mm
1 mm²	AWG 18	1.45 mm	8 mm
1.5 mm²	AWG 16	1.75 mm	8 mm
2.5 mm²	AWG 14	2.25 mm	6 mm

Identification	Wire cross section (mm²)	Part number male	Part number female	Drawing Dimensions in mm
Han D®, Crimp contact, silver plated contacts, contact resistance ≤3 mOhm	0.14 – 0.37 0.5 0.75 1 1.5 2.5	09 15 000 6104 09 15 000 6103 09 15 000 6105 09 15 000 6102 09 15 000 6101 09 15 000 6106	09 15 000 6204 09 15 000 6203 09 15 000 6205 09 15 000 6202 09 15 000 6201 09 15 000 6206	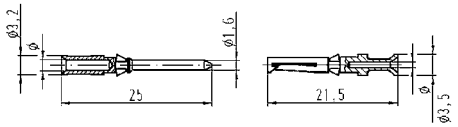

Wire gauge		⌀	Stripping length
0.14-0.37 mm²	AWG 26-22	0.9 mm	8 mm
0.5 mm²	AWG 20	1.1 mm	8 mm
0.75 mm²	AWG 18	1.3 mm	8 mm
1 mm²	AWG 18	1.45 mm	8 mm
1.5 mm²	AWG 16	1.75 mm	8 mm
2.5 mm²	AWG 14	2.25 mm	6 mm

F.O. contact for 1 mm plastic fibre		20 10 001 3211	20 10 001 3221	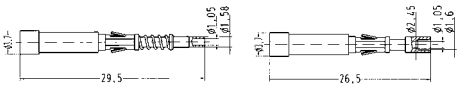 20 10 001 3211 + 20 10 001 3221
Coding element, plastic Range of delivery: 20 pieces per frame 		09 12 000 9924	09 12 000 9924	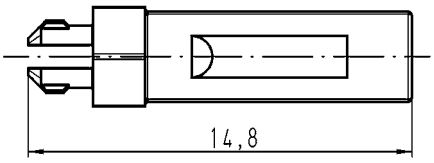

Features

- Compact design saves space
- Suitable for Han D® crimp contacts
- Pre-mating PE crimp contact
- 3 coding options by using a coding pin instead of fixing screw

Derating

Current carrying capacity

The current carrying capacity of the connectors is limited by the thermal load capability of the contact element material including the connections and the insulating parts. The derating curve is therefore valid for currents which flow constantly (non-intermittent) through each contact element of the connector evenly, without exceeding the allowed maximum temperature.

Measuring and testing techniques acc. to IEC 60512-5-2

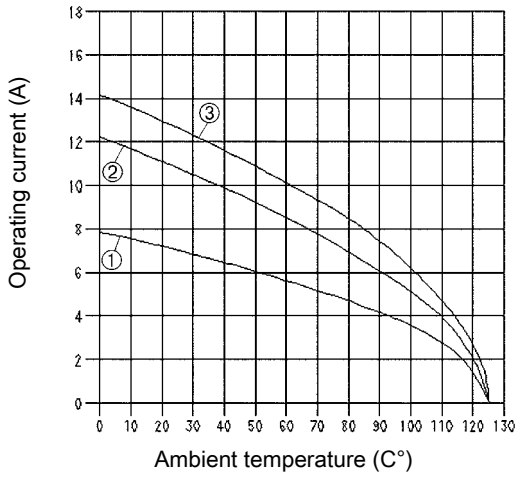

① Wire cross section 0.5 mm²
② Wire cross section 1 mm²
③ Wire cross section 1.5 mm²

Technical characteristics

Contacts	17/0
Electrical data acc. to IEC 61984	**10 A 160 V 2.5 kV 3**
Rated current	10 A
Rated voltage	160 V
Rated impulse voltage	2.5 kV
Pollution degree	3
Rated voltage acc. to UL	250 V
Rated voltage acc. to CSA	250 V
Insulation resistance	≥10^{10} Ohm
Limiting temperatures	-40 °C ... 125 °C
Flammability (insert) acc. to UL 94	V 0
Mating cycles	≥500
Material (insert)	polycarbonate
Colour (insert)	RAL 7032 (light grey)
Material (contact)	copper alloy

Specifications and approvals

IEC 60664-1
IEC 61984

Details

Crimping tools see chapter 90

Remarks on the crimp technique

The wire gauges mentioned in the catalogue refer to geometric wire gauges of cables.

Number of contacts

17/0+ ⏚

160 V
10 A

Identification	Wire cross section (mm²)	Part number male	Part number female	Drawing Dimensions in mm
Han® Q, Crimp terminal 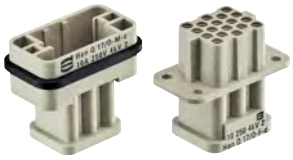 Please order crimp contacts separately.		09 12 017 3001	09 12 017 3101	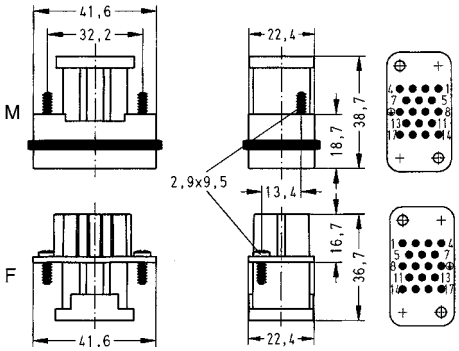 Contact arrangement (view from termination side)
Han D®, Crimp contact, gold plated contacts, contact resistance ≤3 mOhm 	0.14 – 0.37 0.5 0.75 1 1.5 2.5	09 15 000 6124 09 15 000 6123 09 15 000 6125 09 15 000 6122 09 15 000 6121 09 15 000 6126	09 15 000 6224 09 15 000 6223 09 15 000 6225 09 15 000 6222 09 15 000 6221 09 15 000 6226	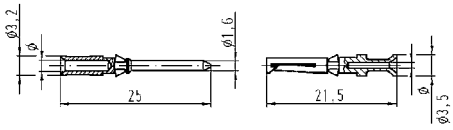 Wire gauge / ø / Stripping length 0.14-0.37 mm² AWG 26-22 / 0.9 mm / 8 mm 0.5 mm² AWG 20 / 1.1 mm / 8 mm 0.75 mm² AWG 18 / 1.3 mm / 8 mm 1 mm² AWG 18 / 1.45 mm / 8 mm 1.5 mm² AWG 16 / 1.75 mm / 8 mm 2.5 mm² AWG 14 / 2.25 mm / 6 mm
Han D®, Crimp contact, silver plated contacts, contact resistance ≤3 mOhm 	0.14 – 0.37 0.5 0.75 1 1.5 2.5	09 15 000 6104 09 15 000 6103 09 15 000 6105 09 15 000 6102 09 15 000 6101 09 15 000 6106	09 15 000 6204 09 15 000 6203 09 15 000 6205 09 15 000 6202 09 15 000 6201 09 15 000 6206	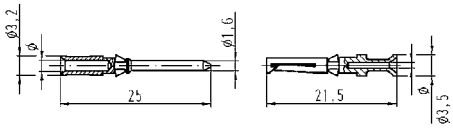 Wire gauge / ø / Stripping length 0.14-0.37 mm² AWG 26-22 / 0.9 mm / 8 mm 0.5 mm² AWG 20 / 1.1 mm / 8 mm 0.75 mm² AWG 18 / 1.3 mm / 8 mm 1 mm² AWG 18 / 1.45 mm / 8 mm 1.5 mm² AWG 16 / 1.75 mm / 8 mm 2.5 mm² AWG 14 / 2.25 mm / 6 mm
F.O. contact for 1 mm plastic fibre		20 10 001 3211	20 10 001 3221	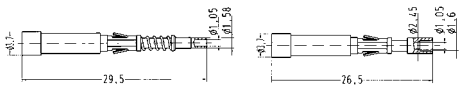 20 10 001 3211 + 20 10 001 3221

Han Q

Features

- Easy handling of signal connectors in industrial environment
- High density of contacts
- Suitable for D-Sub crimp contacts
- One preleading contact

Derating

Current carrying capacity

The current carrying capacity of the connectors is limited by the thermal load capability of the contact element material including the connections and the insulating parts. The derating curve is therefore valid for currents which flow constantly (non-intermittent) through each contact element of the connector evenly, without exceeding the allowed maximum temperature.

Measuring and testing techniques acc. to IEC 60512-5-2

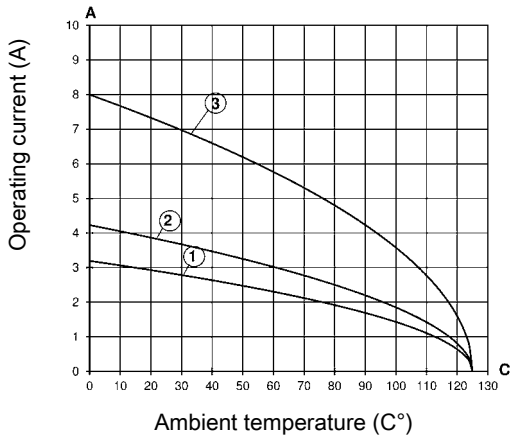

① Stamped contacts: Wire cross section 0.14 mm²
② Stamped contacts: Wire cross section 0.25 mm²
③ Turned contacts: Wire cross section 0.5 mm²

Technical characteristics

Contacts	21
Electrical data acc. to IEC 61984	**6.5 A 50 V 0.8 kV 3**
Rated current	6.5 A
Rated voltage	50 V
Rated impulse voltage	0.8 kV
Pollution degree	3
Rated voltage AC	50 V
Rated voltage DC	120 V
Insulation resistance	≥10^{10} Ohm
Limiting temperatures	-40 °C ... 125 °C
Flammability (insert) acc. to UL 94	V 0
Material (insert)	polycarbonate
Colour (insert)	RAL 7032 (light grey)
Material (contact)	copper alloy

Specifications and approvals

IEC 60664-1
IEC 61984

Details

Crimping tools see chapter 90

Remarks on the crimp technique

The wire gauges mentioned in the catalogue refer to geometric wire gauges of cables.

Number of contacts

21

~ 50 V
- 120 V
50 V
6.5 A

Identification	Wire cross section (mm²)	Part number male	Part number female	Drawing Dimensions in mm
Han® Q, Crimp terminal Please order crimp contacts separately.		09 12 021 3001	09 12 021 3101	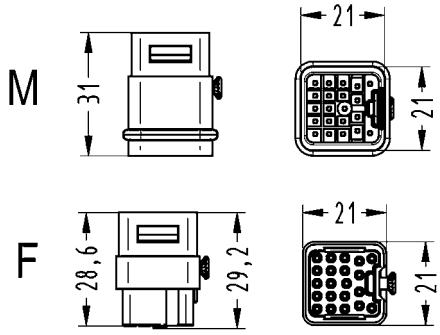
Han® D-Sub crimp contact, turned contacts	0.09 – 0.25 0.13 – 0.33 0.25 – 0.52	09 67 000 7576 09 67 000 5576 09 67 000 8576	09 67 000 7476 09 67 000 5476 09 67 000 8476	
Han® D-Sub crimp contact, stamped contacts	0.09 – 0.25 0.25 – 0.56	09 67 000 7176 09 67 000 8176	09 67 000 7276 09 67 000 8276	

Wire gauge	max. insulation diameter	Stripping length
0.09-0.25 mm²	1.7	4 mm
0.13-0.33 mm²	1.7	4 mm
0.25-0.52 mm²	1.7	4 mm

Wire gauge	max. insulation diameter	Stripping length
0.09-0.25 mm²	1.02	2.5 mm + 0.5
0.25-0.52 mm²	1.52	2.5 mm + 0.5

Features

- Combination connector: Ethernet connector based on RJ45 with up to 10 signal D-Sub contacts, crimp termination
- Turned D-Sub contacts of performance level 1
- Compact design saves space
- High density of contacts

Technical characteristics

Contacts	8
Electrical data, signal	**5 A 50 V 0.8 kV 3**
Rated current	5 A
Rated voltage	50 V
Rated impulse voltage	0.8 kV
Insulation resistance	≥10^{10} Ohm
Limiting temperatures	-40 °C ... 85 °C
Flammability (insert) acc. to UL 94	V 0
Mating cycles	≥500
Material (insert)	polycarbonate
Colour (insert)	RAL 7032 (light grey)

Specifications and approvals

IEC 60664-1
IEC 61984

Number of contacts

8

50 V
5 A

Identification	Wire cross section (mm²)	Part number male	Part number female	Drawing Dimensions in mm
Han® Q, RJ45 acc. to IEC 60603-7, Han® Q Data RJ45, Cat. 5e Please order crimp contacts separately.		09 12 011 3001	09 12 011 3111	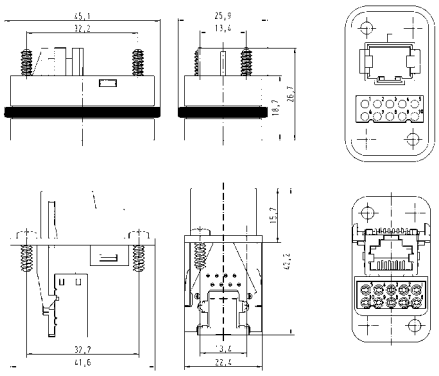
Han® D-Sub crimp contact, turned contacts 	0.13 – 0.33 0.25 – 0.52	09 67 000 5576 09 67 000 8576	09 67 000 5476 09 67 000 8476	

Wire gauge	max. insulation diameter	Stripping length
0.09-0.25 mm²	1.7	4 mm
0.13-0.33 mm²	1.7	4 mm
0.25-0.52 mm²	1.7	4 mm

Features

- Plastic hoods/housings for industrial applications
- Compact design saves space

Technical characteristics

Limiting temperatures	-40 °C ... 125 °C
Flammability (hoods/housings) acc. to UL 94	V 0
Flammability (locking lever) acc. to UL 94	V 0
Protection class acc. to UL 50	NEMA type 4/4X/12
Degree of protection acc. to IEC 60529	IP65 / IP67, IP65, IP67
Material (hoods/housings)	polycarbonate, thermoplastic
Colour (hoods/housings)	RAL 9005 (black)
Material (locking lever)	polyamide
Colour (locking lever)	RAL 9005 (black)
Material (seal)	NBR

Specifications and approvals

Plastic hoods/housings for industrial applications
double locking lever

Identification	Cable entry	Part number Low construction	Part number High construction	Drawing Dimensions in mm
Han-Compact®, Hoods, top entry, for Han-Compact® half cable gland	1xM25 1xPg 16 1xPg 21		19 12 008 0429 09 12 008 0427 09 12 008 0429	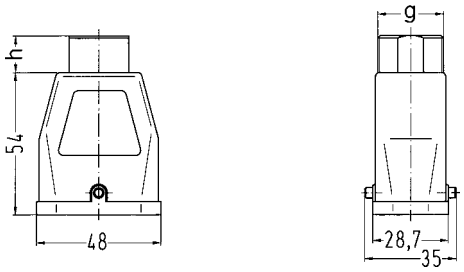
Han-Compact®, Hoods, top entry, for flexible conduits Adaptaflex PAFS18	1xPAFS 18		09 12 008 0428	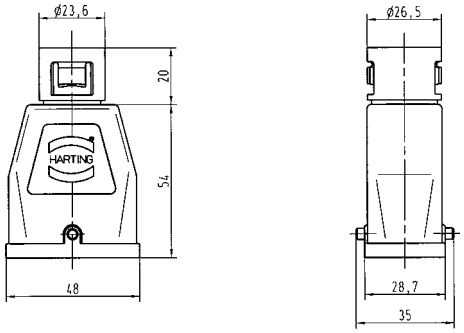
Han-Compact®, Hoods, side entry, for Han-Compact® half cable gland	1xPg 16		09 12 008 0527	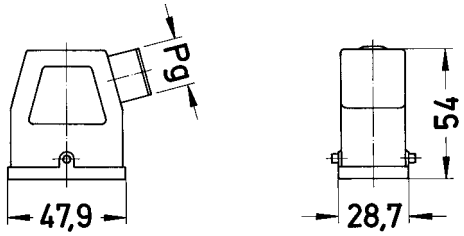
Han-Compact®, Hoods, top/side entry, for Han-Compact® half cable gland	2xM20		19 12 008 0425	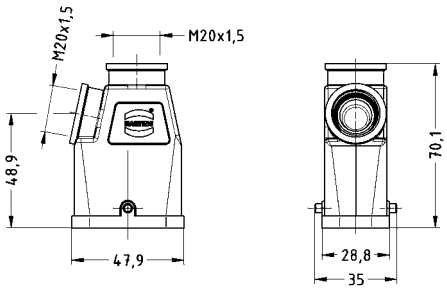

Han Q

Identification	Cable entry	Part number Low construction	Part number High construction	Drawing Dimensions in mm
Han-Compact®, Bulkhead mounted housings, straight version		09 12 008 0327		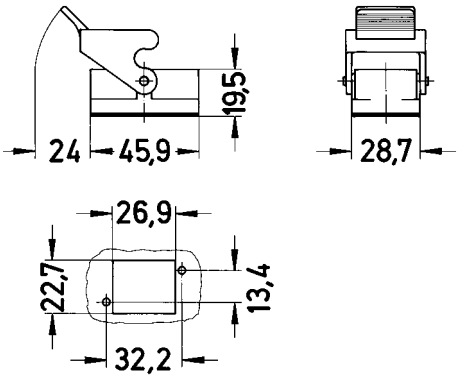
Han-Compact®, Bulkhead mounted housings, side entry		09 12 008 0902		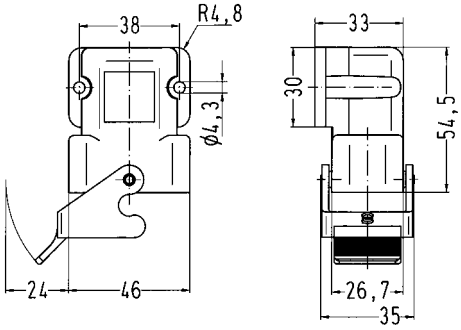
Han-Compact®, Protection cover for bulkhead mounted housings, plastic for mounted male insert		09 12 008 5407		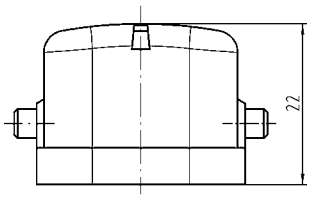
Han-Compact®, Protection cover for bulkhead mounted housings, plastic for mounted female insert		09 12 008 5408		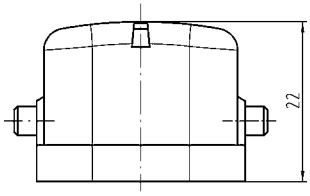

Identification	Cable entry	Part number Low construction	Part number High construction	Drawing Dimensions in mm
Han-Compact®, Surface mounted housings, for Han-Compact® half cable gland 	1xPg 16	09 12 008 0901		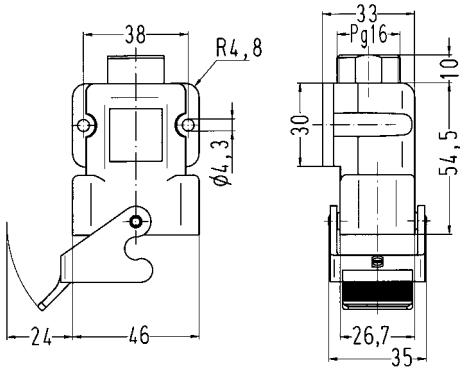
Han-Compact®, Cable to cable housings, top entry, for Han-Compact® half cable gland 	1xM25 1xPg 16		19 12 008 0729 09 12 008 0727	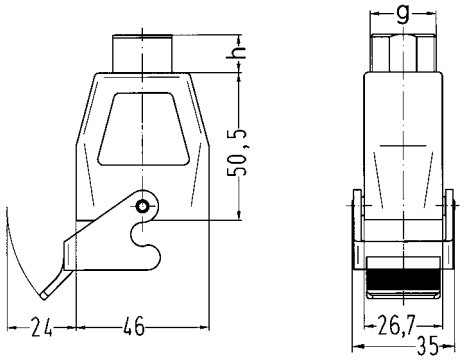
Han-Compact®, Cable to cable housings, top entry, for flexible conduits Adaptaflex PAFS18 	1xPAFS 18		09 12 008 0728	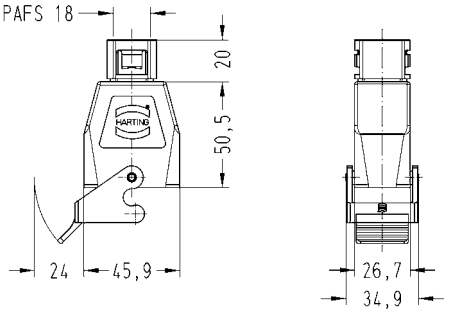

Features

- Metal hoods/housings for industrial applications
- Large space for cables
- Visible cabling
- Separate PE termination possible

Technical characteristics

Limiting temperatures	-40 °C ... 125 °C
Protection class acc. to UL 50	NEMA type 4/4X/12
Degree of protection acc. to IEC 60529	IP65
Material (hoods/housings)	zinc die-cast
Surface (hoods/housings)	chromated, powder-coated
Colour (hoods/housings)	RAL 9005 (black)
Material (locking lever)	stainless steel
Material (seal)	NBR

Specifications and approvals

GL

Metal hoods/housings for industrial applications
double locking lever

Identification	Cable entry	Part number Low construction	Part number High construction	Drawing Dimensions in mm
Han-Compact®, Hoods, powder-coated, top entry, for standard cable gland, including separate PE contact for all inserts of size Han-Compact®	1xM25		19 12 008 0426	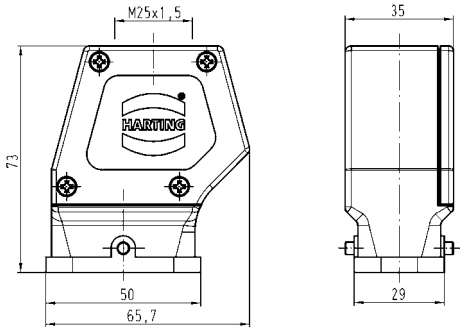
Han-Compact®, Hoods, chromated, top entry, for Han-Compact® half cable gland, including separate PE contact for all inserts of size Han-Compact®	1xM25		19 12 008 0411	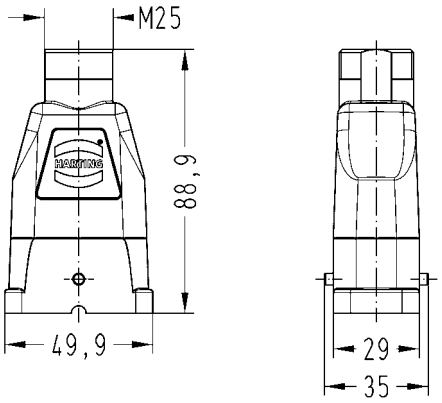
Han-Compact®, Hoods, powder-coated, top entry, for Han-Compact® half cable gland, including separate PE contact for all inserts of size Han-Compact®	1xM25		19 12 708 0411	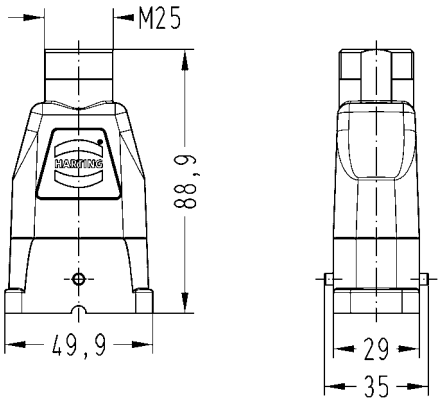

Han Q

Identification	Cable entry	Part number Low construction	Part number High construction	Drawing Dimensions in mm
Han-Compact®, Hoods, powder-coated, side entry, for standard cable gland, including separate PE contact for all inserts of size Han-Compact®	1xM25		19 12 008 0526	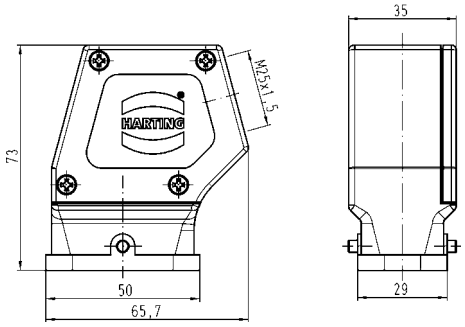
Han-Compact®, Hoods, chromated, side entry, for Han-Compact® half cable gland for Han® Q 8/0 Crimp, Han® Q 17/0 and Han® Q Data RJ45	1xM25		19 12 008 0501	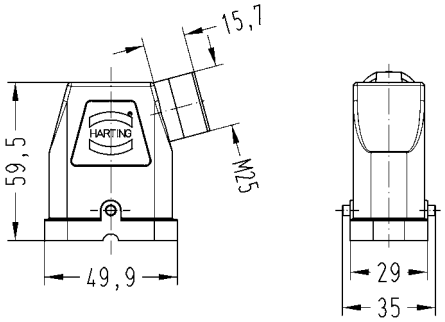
Han-Compact®, Hoods, chromated, side entry, for Han-Compact® half cable gland, including separate PE contact for all inserts of size Han-Compact®	1xM25		19 12 008 0511	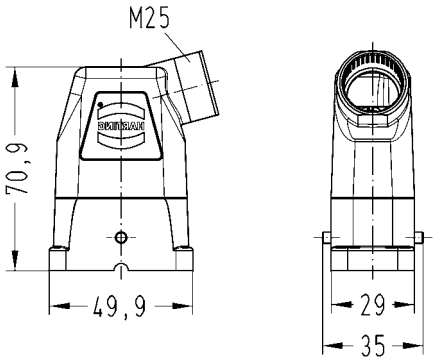
Han-Compact®, Hoods, powder-coated, side entry, for Han-Compact® half cable gland for Han® Q 8/0 Crimp, Han® Q 17/0 and Han® Q Data RJ45	1xM25		19 12 708 0501	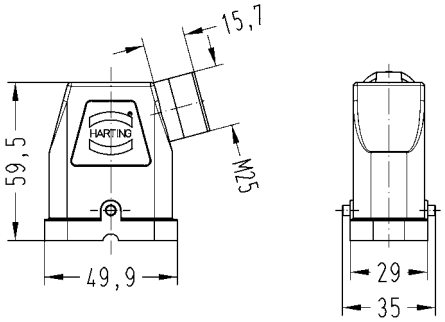

Identification	Cable entry	Part number Low construction	Part number High construction	Drawing Dimensions in mm
Han-Compact®, Hoods, powder-coated, side entry, for Han-Compact® half cable gland, including separate PE contact for all inserts of size Han-Compact®	1xM25		19 12 708 0511	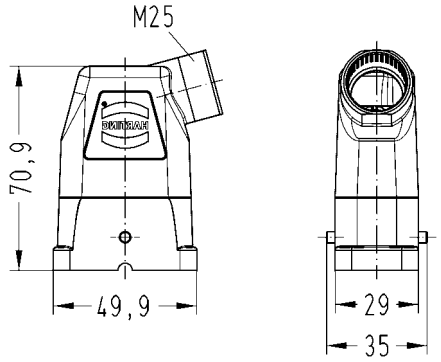
Han-Compact®, Bulkhead mounted housings, chromated 		09 12 008 0301		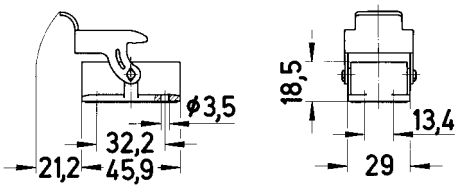
Han-Compact®, Bulkhead mounted housings, powder-coated 		09 12 708 0301		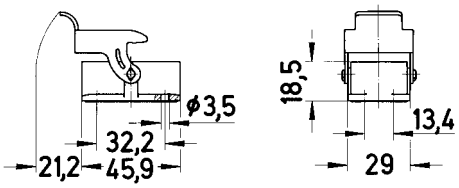

Features

- Hoods/Housings for higher EMC requirements
- Separate PE termination possible
- High degree of flexibility due to two-part assembly

Technical characteristics

Limiting temperatures	-40 °C ... 125 °C
Protection class acc. to UL 50	NEMA type 4/4X/12
Degree of protection acc. to IEC 60529	IP65
Material (hoods/housings)	zinc die-cast
Surface (hoods/housings)	nickel plated
Material (locking lever)	stainless steel
Material (seal)	NBR

Specifications and approvals

GL

Hoods/Housings for higher EMC requirements
double locking lever

Identification	Cable entry	Part number Low construction	Part number High construction	Drawing Dimensions in mm
Han-Compact®, Hoods, top entry, for standard cable gland, including separate PE contact for all inserts of size Han-Compact®	1xM25		19 12 008 0428	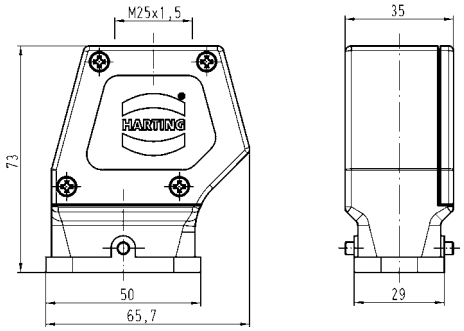
Han-Compact®, Hoods, top entry, for Han-Compact® half cable gland, including separate PE contact for all inserts of size Han-Compact®	1xM25		19 12 008 0412	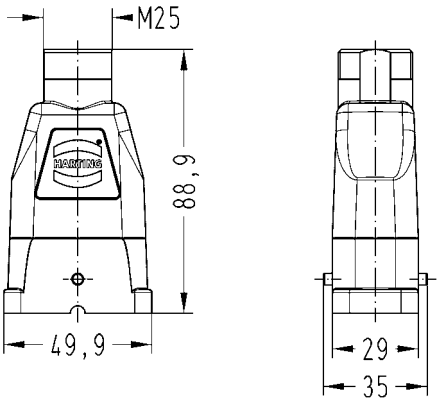
Han-Compact®, Hoods, side entry, for standard cable gland, including separate PE contact for all inserts of size Han-Compact®	1xM25		19 12 008 0528	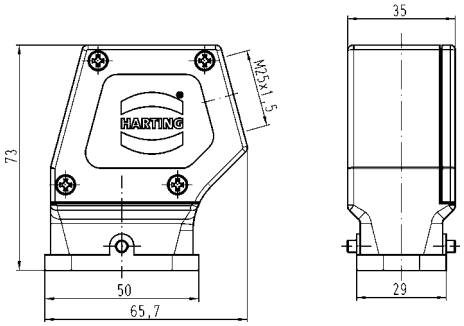

Han Q

Identification	Cable entry	Part number Low construction	Part number High construction	Drawing Dimensions in mm
Han-Compact®, Hoods, side entry, for Han-Compact® half cable gland for Han® Q 8/0 Crimp, Han® Q 17/0 and Han® Q Data RJ45	1xM25		19 12 008 0502	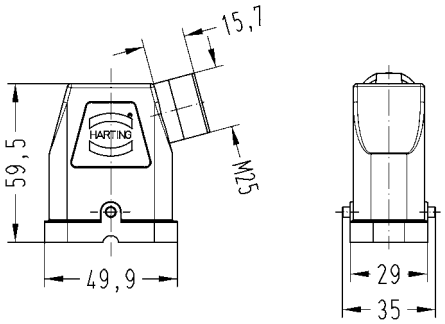
Han-Compact®, Hoods, side entry, for Han-Compact® half cable gland, including separate PE contact for all inserts of size Han-Compact®	1xM25		19 12 008 0512	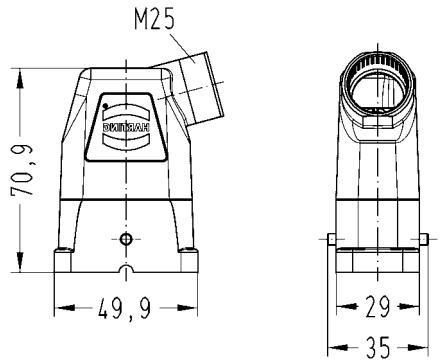
Han-Compact®, Bulkhead mounted housings 		09 12 008 0303		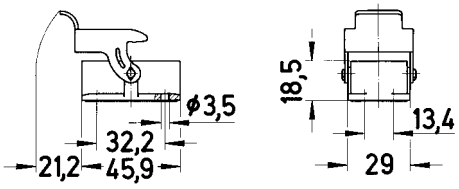

Han Q

Technical characteristics

Colour (accessories) black

Technical characteristics

Material (screwing) thermoplastic

Identification	Clamping range (mm)	Size	Part number	Drawing Dimensions in mm
Han-Compact®, Half gland, for surface mounted housings	6.5 ... 9.5 11.5 ... 15.5	Pg 16 Pg 16	09 00 000 5057 09 00 000 5058	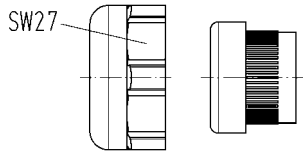
Han-Compact®, Half gland, for hoods, for cable to cable housings	6.5 ... 9.5 11.5 ... 15.5 9 ... 13 14 ... 18 17 ... 20.5	Pg 16 Pg 16 Pg 16 Pg 21 Pg 21	09 00 000 5047 09 00 000 5059 09 00 000 5156 09 00 000 5157 09 00 000 5158	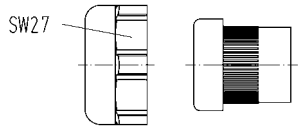 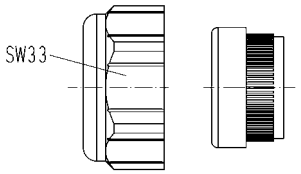 09 00 000 5157 + 09 00 000 5158
Han-Compact®, Half gland, for hoods, for cable to cable housings, black	6.5 ... 9.5 10.5 ... 14 14 ... 17	M25 M25 M25	19 12 000 5156 19 12 000 5157 19 12 000 5158	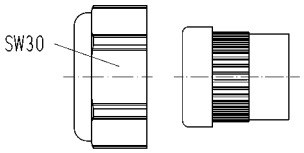

Technical characteristics

Material (screwing) metal

Identification	Clamping range (mm)	Size	Part number	Drawing Dimensions in mm
Han-Compact®, Half gland, for hoods, metal	14 ... 17 10.5 ... 14	M25 M25	19 12 000 5058 19 12 000 5057	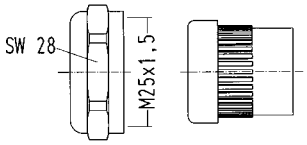
Han-Compact®, EMC clamp, for hoods	10.5 ... 14 10.5 ... 14 14 ... 17	M25 M25 M25	19 62 000 5056 19 62 000 5057 19 62 000 5058	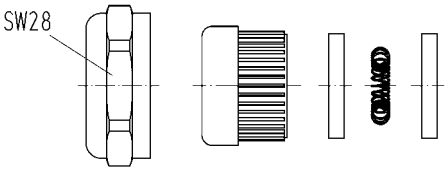

	cable-∅	shield-∅	SW
19 62 000 5056	10.5 … 14mm	9 … 13 mm	28
19 62 000 5057	10.5 … 14mm	6 … 11 mm	28
19 62 000 5058	14 … 17 mm	9 … 13 mm	28

Technical characteristics

Material (accessories) NBR, plastic

Technical characteristics

Colour (accessories) black

Identification	Part number	Drawing Dimensions in mm
Han-Compact®, Flange gasket, for bulkhead mounted plastic housings, angled, for surface mounted housings	09 12 000 9911	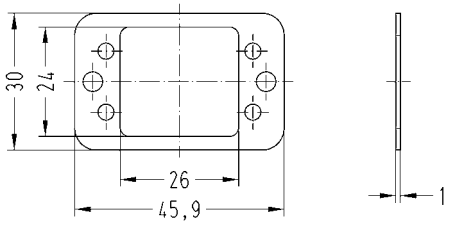
Han-Compact®, Flange gasket, for bulkhead mounted plastic housings, straight 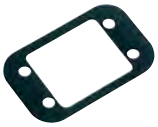	09 12 000 9912	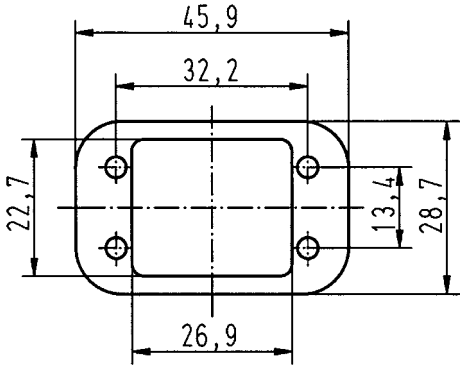
Locking lever, single locking lever, Han® Q 8/0, black	09 00 000 5244	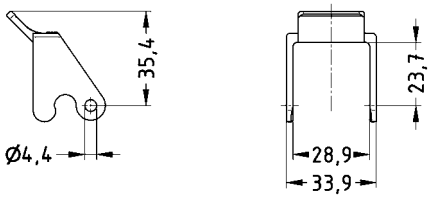

Han Q

Contents | Page

Han® K 3/0	**14.7**
Han® K 3/2	**14.9**
Hoods/Housings for Han® K 3/0, Han® K 3/2	**14.11**
Han® HC Modular 250	**14.14**
Hoods/Housings for Han® HC Modular 250	**14.16**
Han® HC Modular 350	**14.21**
Hoods/Housings for Han® HC Modular 350	**14.24**
Han® M hoods/housings for Han® HC Modular 350	**14.40**
Han® HC Modular 650	**14.43**
Hoods/Housings for Han® HC Modular 650	**14.46**
Han® 24 HPR EasyCon	**14.54**
Han® 24 HPR EasyCon - Accessories	**14.60**
Han® 48 HPR	**14.61**
Han® HC Individual	**14.66**
Han® HC Individual Sets	**14.70**

Assembly instructions

Remarks on the axial screw termination see chapter 00

Step 1: The outer diameter of the cable must not exceed 19.5 mm.
Strip the cable by 19 mm.

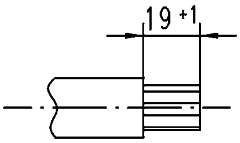

Insert the cable through hood.

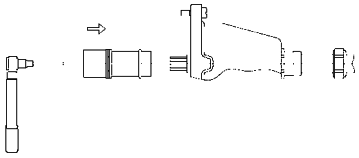

Step 2: Press the Han HC contact on the cable strand and apply tightening torque according table 1 by using a tightening torques tool. Take care that all cable strands fit completely inside the contact termination cavity. During assembling adhere the cable and the contact to minimise axial movement or twisting.

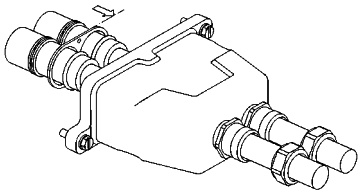

Step 3: Move the perforated plate across the HC contacts.

Step 4: Fit frame onto the hexagon shape of the HC contact. Coding can be arranged by turning the contact within 60° steps. Bolt the frame together with perforated plate.

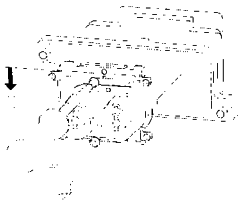

Step 5: Push back the packet inside the good.

Step 6: Tighten the four M3 (tightening torque 0.5 Nm) screws and the cable gland according manufacturer recommendation.

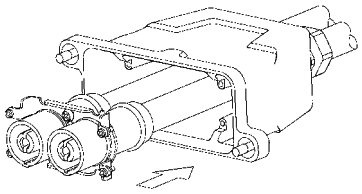

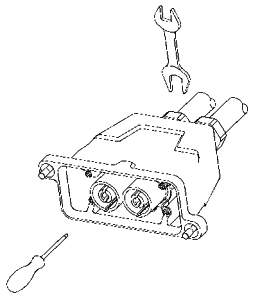

During the assembly of the frame for 4 poles the following tightening torques have to be taken into consideration:
A = 0.5 Nm
B = 1.5 Nm
C = 0.25 Nm

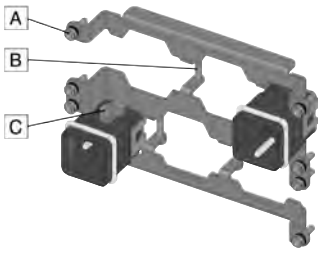

Assembly instructions

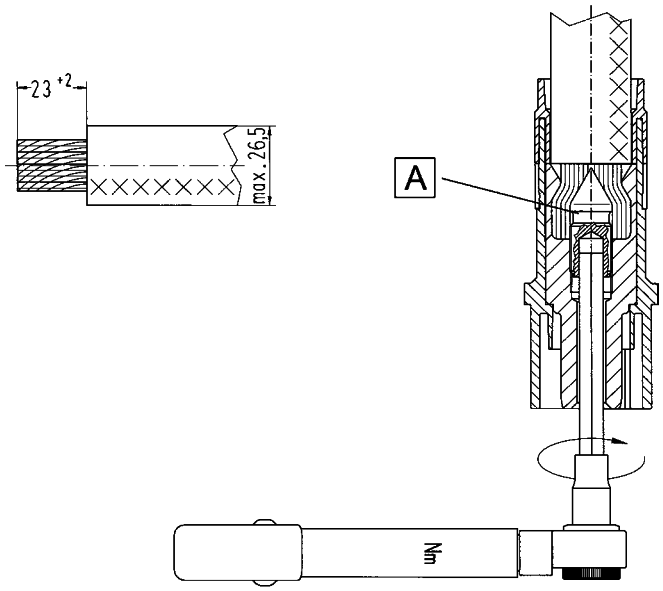

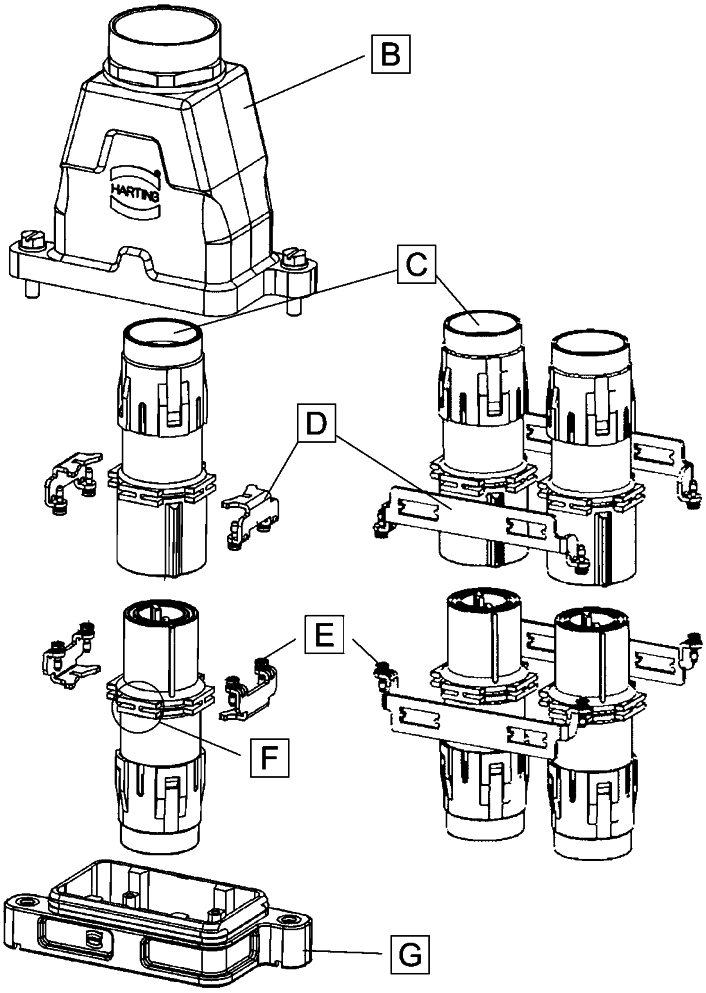

1. Strip cable to 23+2 mm.

2. Push conductor through the cable gland and the housing. Push the stripped end of the conductor into the termination entry of the module until the insulation touches the contact.

3. To tighten the axial screw, a hexagonal wrench size 8 is needed. Insert the hexagonal wrench on the mating side of the contact. At the same time, push the conductor over the axial screw.The locking screw has to be tightened with the recommended tightening torque that is determined by the conductor's cross section.

4. Once the modules are terminated, they are mounted into the housing by using two metal frames (tightening torque of the fixing screws = 0.5 Nm). The modules have 4 pegs formed by 2 parallel ribs (each peg shapes like a "H"). Each rib takes 1 pole frame, where the lateral link has to go into the relief of the frame. The 2 pole frames have 2 cutouts on the wall which get fitted to the "H"-shaped pegs (see figure). The heads of the screws have to face the mating direction of the module. Coding can be established by rotating the contact by 90 degrees. Therefore it is important that the corresponding modules are assembled in the correct position otherwise mating is not possible.

5. After assembling the modules in the housing, the tightening torque of the locking screw can be checked and corrected if necessary.

6. After final assembly of the contacts, the user should ensure that the cable is adequately strain reliefed to protect the contact from radial stress.

A - Axial screw, B - Hood, C - Termination entry, D - Frame, E - Fixing screws, F - parallel ribs with H-shape, G - Housings bulkhead mounting,

Assembly and construction

1 Assembly carrier plate

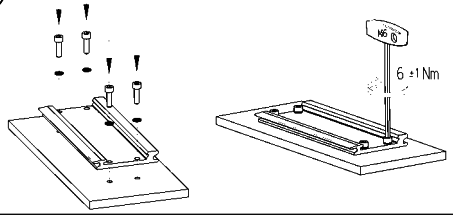

2 Assembly locking module

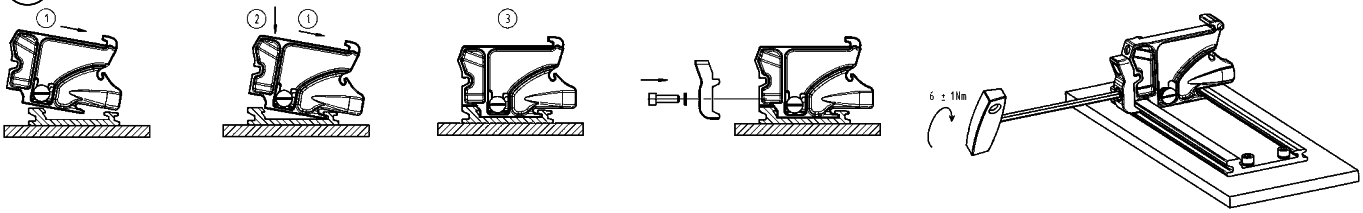

3 Crimping

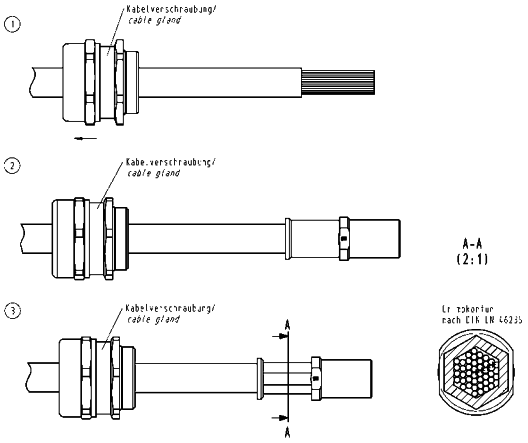

Wire gauge	Tool identification	Stripping length
25 mm²	10	26 mm
35 mm²	12	26 mm
50 mm²	14	28 mm
70 mm²	16	28 mm
95 mm²	18	30 mm
120 mm²	20	24 mm

* For stranded wire acc. to IEC 60 228 classe 5

4 Assembly identification carrier module

5 Connector configuration variant 1

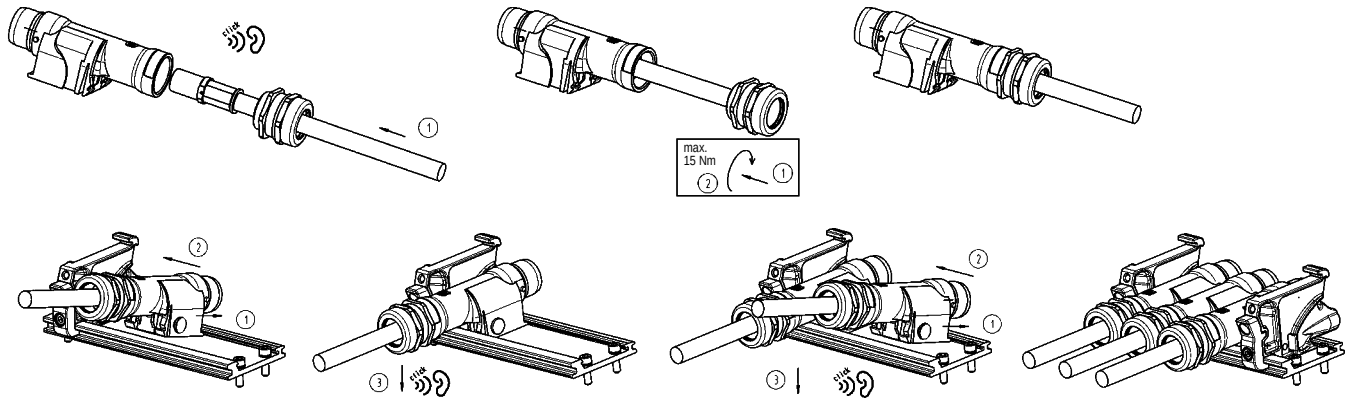

Assembly and construction

5 Connector configuration variant 2

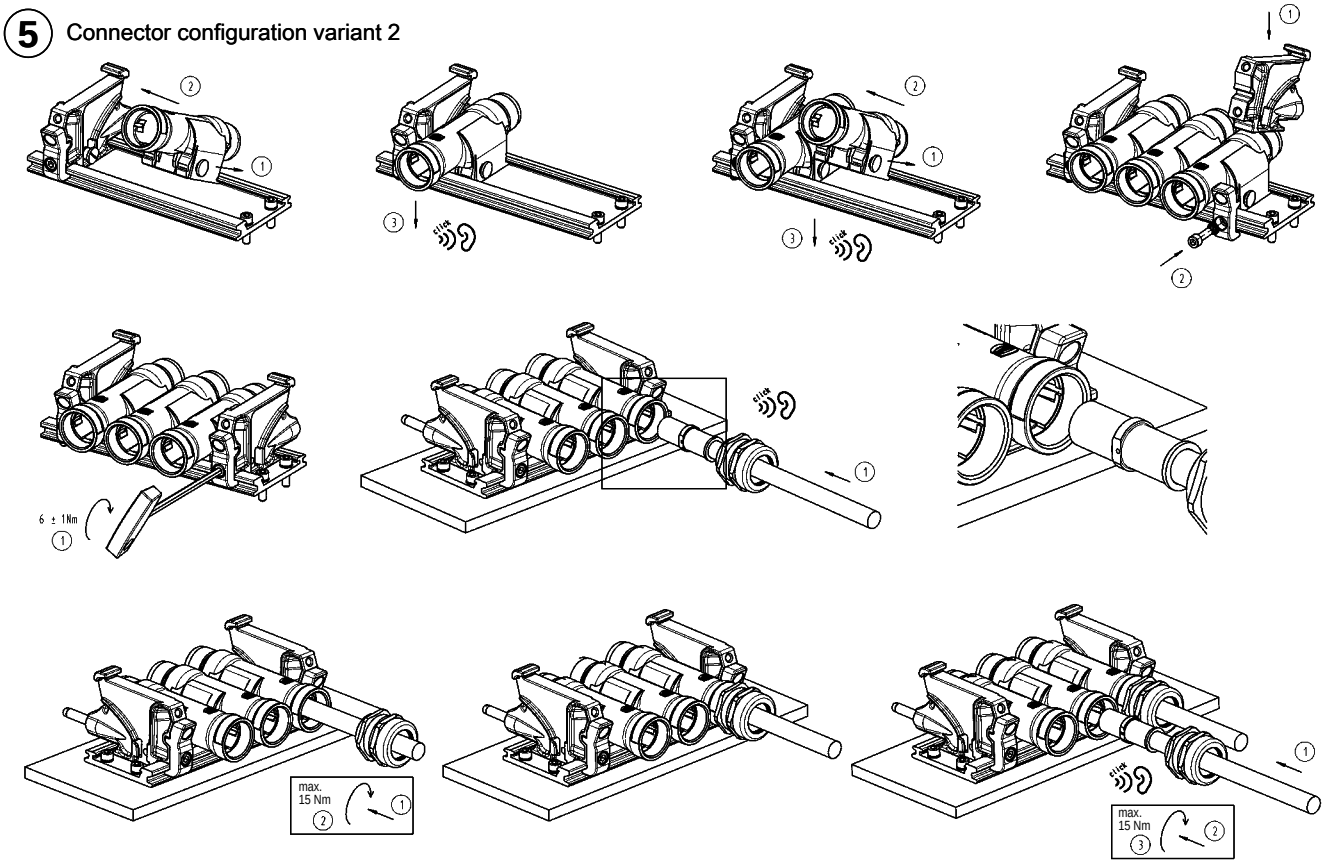

6 Locking

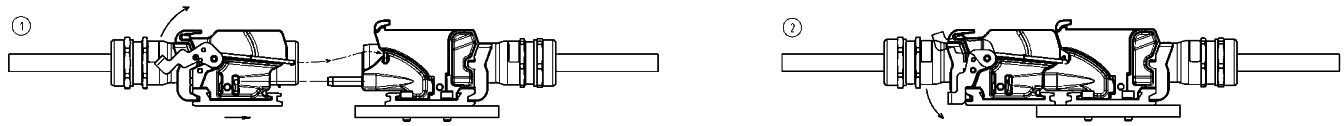

7 Stackable rail system

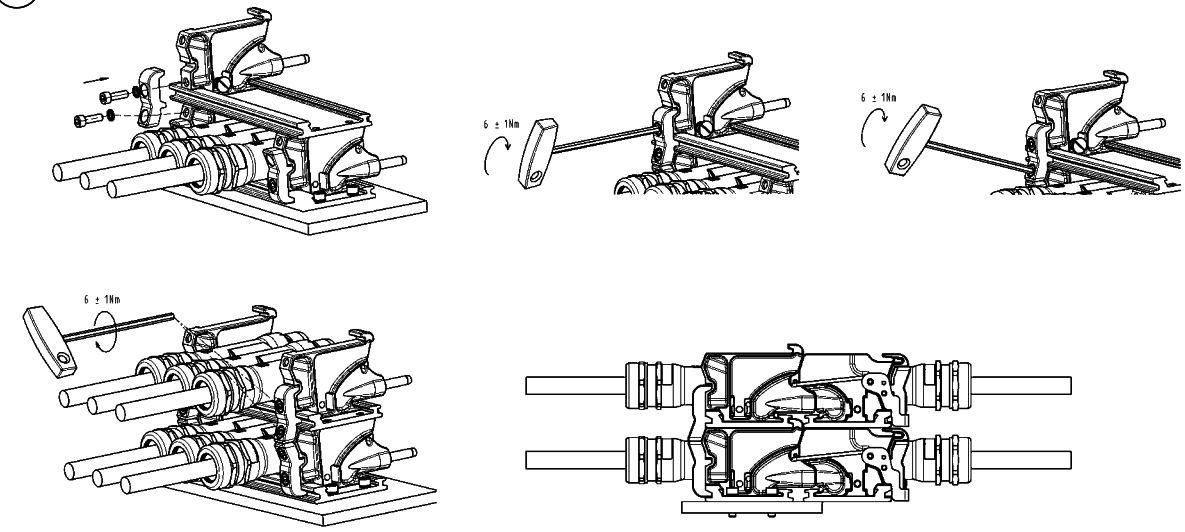

Removal

1 Removal carrier module

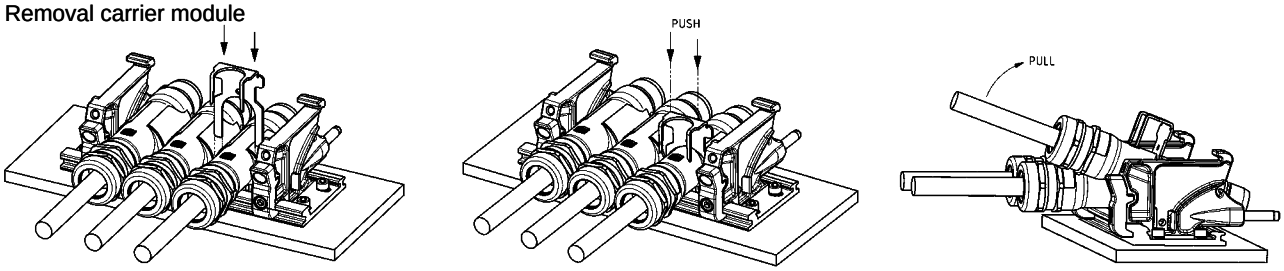

2 Removal contacts

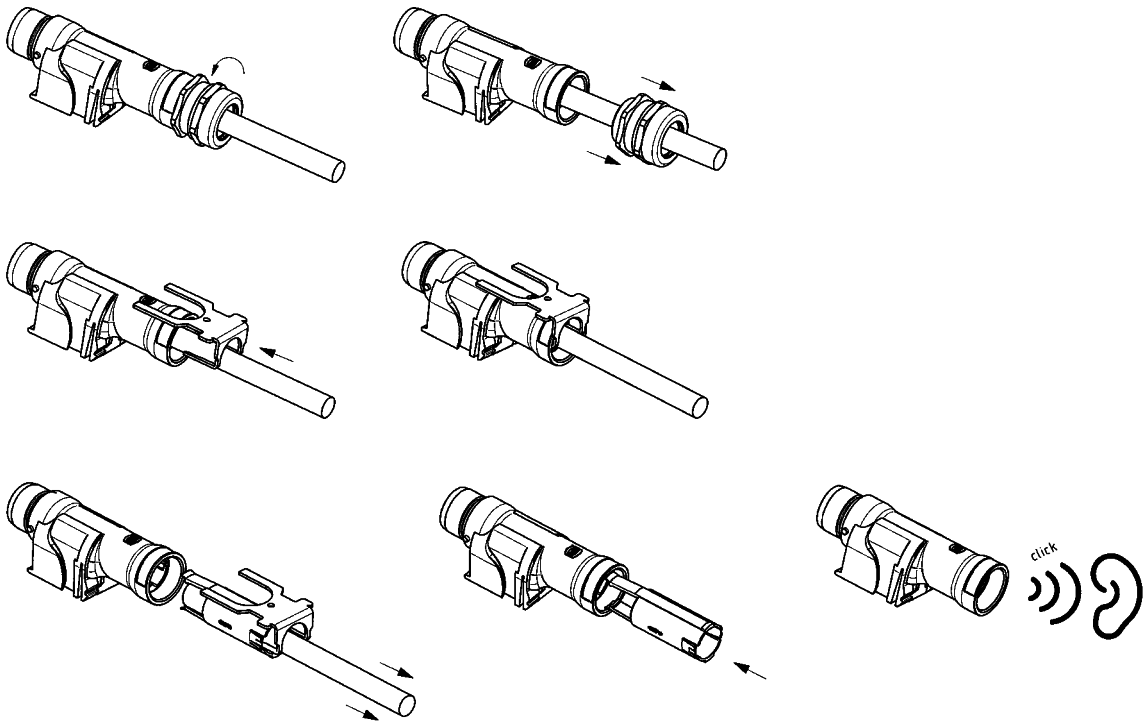

3 Removal coding

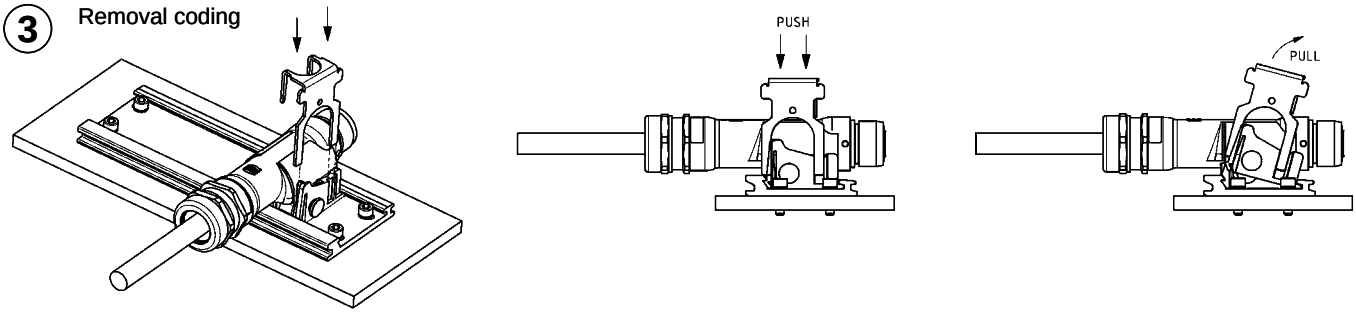

4 Removal Identification carrier module

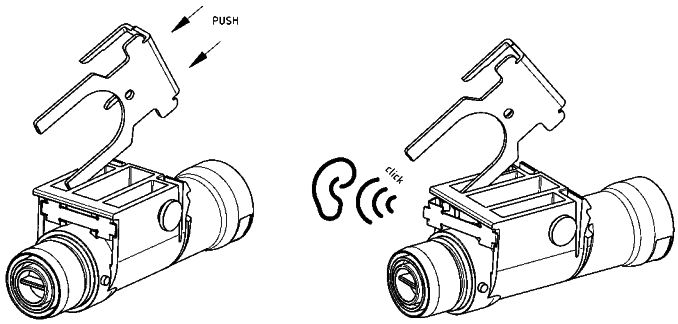

Features

- The ideal connector for transmission of high currents requiring little space
- The vertical and angled versions offer solutions for almost all applications
- The angled versions offer a space-saving 90° cable wiring

Derating

Current carrying capacity

The current carrying capacity of the connectors is limited by the thermal load capability of the contact element material including the connections and the insulating parts. The derating curve is therefore valid for currents which flow constantly (non-intermittent) through each contact element of the connector evenly, without exceeding the allowed maximum temperature.

Measuring and testing techniques acc. to IEC 60512-5-2

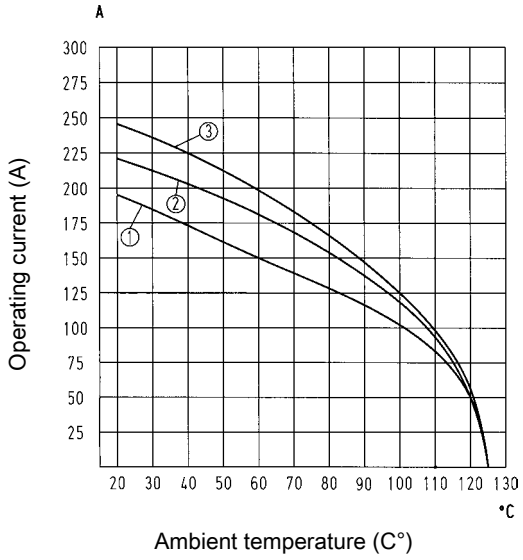

① Wire cross section 35 mm²
② Wire cross section 50 mm²
③ Wire cross section 70 mm²

Technical characteristics

Contacts	3/0
Electrical data acc. to IEC 61984	**200 A 1150/2000 V 8 kV 3**
Rated current	200 A
Rated voltage conductor - ground	1150 V
Rated voltage conductor - conductor	2000 V
Rated impulse voltage	8 kV
Pollution degree	3
Rated current acc. to UL	200 A
Rated current acc. to CSA	160 A
Rated voltage acc. to UL	600 V
Rated voltage acc. to CSA	600 V
Insulation resistance	≥10^{10} Ohm
Limiting temperatures	-40 °C ... 125 °C
Flammability (insert) acc. to UL 94	V 0
Mating cycles	≥500
Material (insert)	polycarbonate
Colour (insert)	RAL 7032 (light grey)
Material (contact)	copper alloy

Specifications and approvals

IEC 61984
IEC 60664-1

Details

ATTENTION! Only to be used with special Han® 24 HPR hoods and housings!

Hex key 09 99 000 0371 see chapter 90

Remarks on the axial screw technique

The wire gauges mentioned in the catalogue refer to geometric wire gauges of cables.

Number of contacts

3/0

1150/2000 V
200 A

Identification	Wire cross section (mm²)	Part number male	Part number female	Drawing Dimensions in mm
High Current Connectors, Axial screw terminal, top entry, silver plated contacts, contact resistance ≤0.2 mOhm 	35 – 70	09 38 005 2621	09 38 005 2721	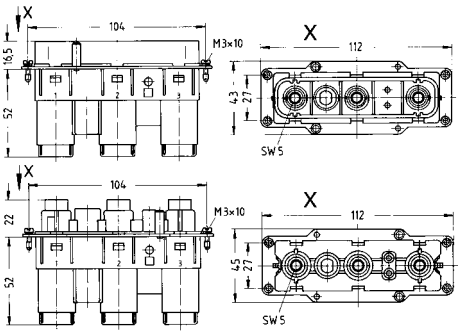 Distance for contact max. 21 mm Stripping length 22 mm Tightening torque mm² 35 50 70 Nm 8 9 10
High Current Connectors, Axial screw terminal, angled entry, silver plated contacts, contact resistance ≤0.2 mOhm 	35 – 70	09 38 005 2622	09 38 005 2722	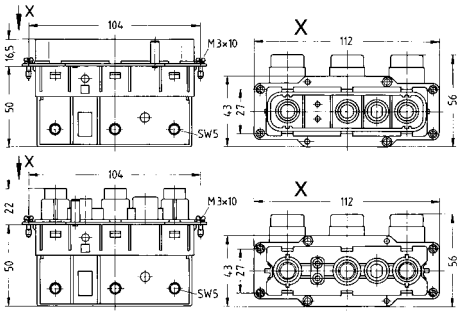 Distance for contact max. 21 mm Stripping length 22 mm Tightening torque mm² 35 50 70 Nm 8 9 10

HC-Modular

Features

- The ideal connector for transmission of high currents requiring little space
- The vertical and angled versions offer solutions for almost all applications
- The angled versions offer a space-saving 90° cable wiring

Derating

Current carrying capacity

The current carrying capacity of the connectors is limited by the thermal load capability of the contact element material including the connections and the insulating parts. The derating curve is therefore valid for currents which flow constantly (non-intermittent) through each contact element of the connector evenly, without exceeding the allowed maximum temperature.

Measuring and testing techniques acc. to IEC 60512-5-2

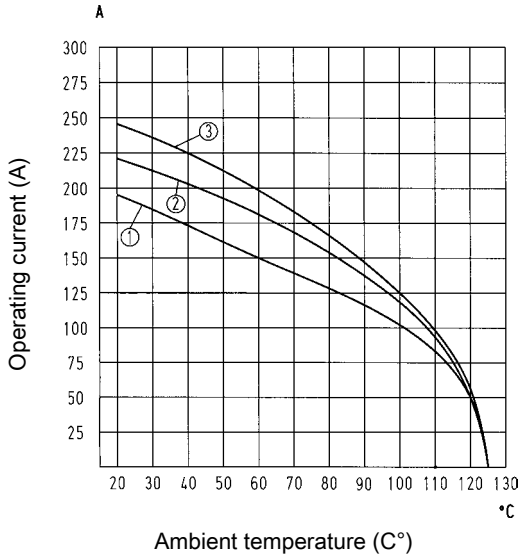

① Wire cross section 35 mm²
② Wire cross section 50 mm²
③ Wire cross section 70 mm²

Technical characteristics

Contacts	3/2
Electrical data acc. to IEC 61984	**200 A 1150/2000 V 8 kV 3**
Rated current	200 A
Rated voltage conductor - ground	1150 V
Rated voltage conductor - conductor	2000 V
Rated impulse voltage	8 kV
Pollution degree	3
Electrical data, signal	**16 A 400 V 6 kV 3**
Rated current	16 A
Rated voltage	400 V
Rated impulse voltage	6 kV
Rated current acc. to UL	200 A
Rated current acc. to UL, signal area	16 A
Rated current acc. to CSA	160 A
Rated current acc. to CSA, signal area	16 A
Rated voltage acc. to UL	600 V
Rated voltage acc. to UL, signal	600 V
Rated voltage acc. to CSA	600 V
Rated voltage acc. to CSA, signal	600 V
Insulation resistance	≥10^{10} Ohm
Limiting temperatures	-40 °C ... 125 °C
Flammability (insert) acc. to UL 94	V 0
Mating cycles	≥500
Material (insert)	polycarbonate
Colour (insert)	RAL 7032 (light grey)

Specifications and approvals

IEC 61984
IEC 60664-1

Details

ATTENTION! Only to be used with special Han® 24 HPR hoods and housings!

Hex key 09 99 000 0371 see chapter 90

Remarks on the axial screw technique

The wire gauges mentioned in the catalogue refer to geometric wire gauges of cables.

Hex key for PE contact 09 99 000 0370 see chapter 90

Number of contacts

3/2+ ⏚

1150/2000 V / 400 V
200 A/16 A

Identification	Wire cross section (mm²)	Wire cross section PE (mm²)	Part number male	Part number female	Drawing Dimensions in mm
High Current Connectors, Axial screw terminal, top entry	35 – 70	16 – 35	09 38 005 2601	09 38 005 2701	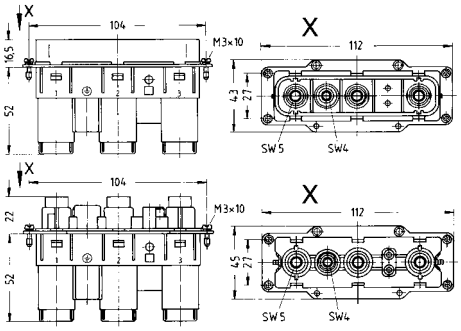 Distance for contact max. 21 mm Stripping length Power contacts 22 mm Stripping length Signal contacts 7 mm Stripping length PE contact 14 mm Wire cross section Control system 2.5 mm² Tightening torque mm² 35 50 70 Nm 8 9 10 Tightening torque Signal contacts 0.5 Nm Tightening torque PE contact 6 Nm
High Current Connectors, Axial screw terminal, angled entry	35 – 70	16 – 35	09 38 005 2602	09 38 005 2702	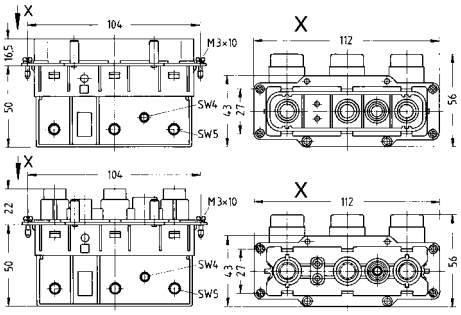 Distance for contact max. 21 mm Stripping length Power contacts 22 mm Stripping length Signal contacts 7 mm Stripping length PE contact 14 mm Wire cross section Control system 2.5 mm² Tightening torque mm² 35 50 70 Nm 8 9 10 Tightening torque Signal contacts 0.5 Nm Tightening torque PE contact 6 Nm

Features

- Hoods/Housings, pressure tight
- Highly EMC resistant
- Screw locking M6
- Field of application: For external electrical interconnections in vehicles, in highly demanding environments and wet areas, as well as for sensitive interconnections that have to be shielded
- Distinguishing feature: colour-coded black, internal seal (RAL 9005)

Technical characteristics

Limiting temperatures	-40 °C ... 125 °C
Protection class acc. to UL 50	NEMA 4/12
Degree of protection acc. to IEC 60529	IP69K
Degree of protection acc. to IEC 60529	IP65 / IP68
Tightening torque (locking)	4 Nm
Corrosion resistance	ASTM B117-09 (500 h)
Material (hoods/housings)	aluminium die-cast, corrosion resistant
Surface (hoods/housings)	powder-coated
Colour (hoods/housings)	RAL 9005 (black)
Material (locking lever)	stainless steel
Material (seal)	NBR

Specifications and approvals

Identification	Cable entry	Part number	Drawing Dimensions in mm
Han® HPR, Hoods, top entry, screw locking, high construction	1xM63	19 40 024 0420	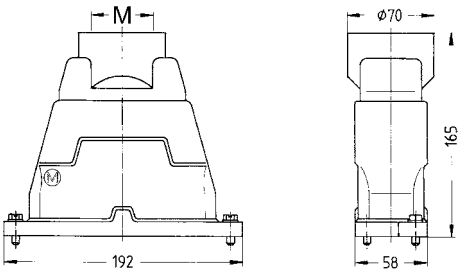
Han® HPR, Hoods, top entry, screw locking	3xM25 3xM25, 1xM20	19 40 024 0461 19 40 024 0471	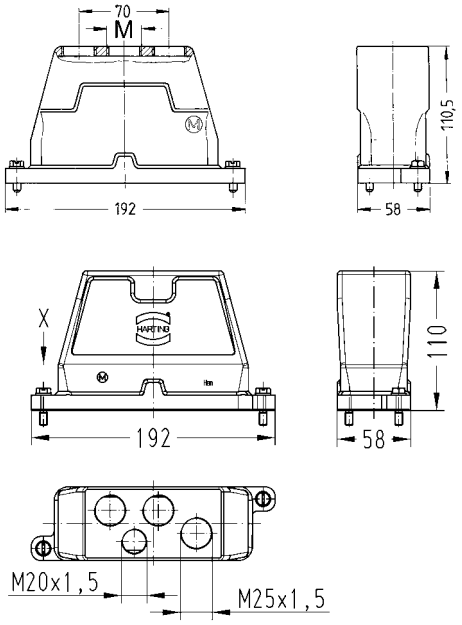
Han® HPR, Hoods, angled entry, screw locking	3xM25	19 40 024 0631	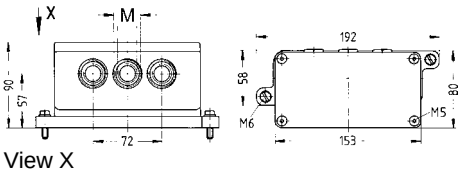 View X

Identification	Cable entry	Part number	Drawing Dimensions in mm
Han® HPR, Bulkhead mounted housings, screw locking 		09 40 024 0311	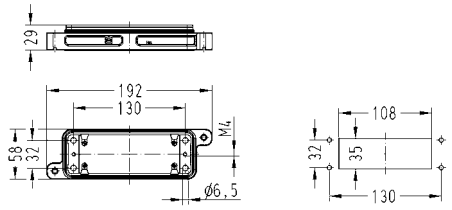
Han® HPR, Surface mounted housings, straight version, top entry, screw locking 	3xM25 3xM25, 1xM20	19 40 024 1231 19 40 024 1271	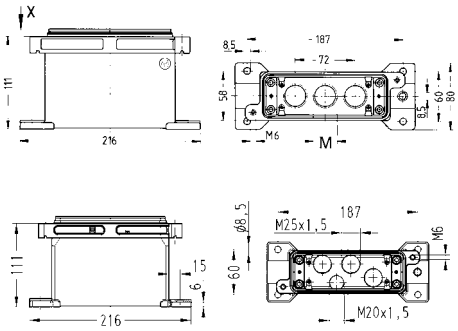
Han® HPR, Surface mounted housings, horizontal version, top entry, screw locking 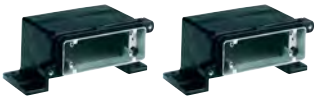	1xM50 3xM25 3xM25, 1xM20	19 40 024 0914 19 40 024 0931 19 40 024 0971	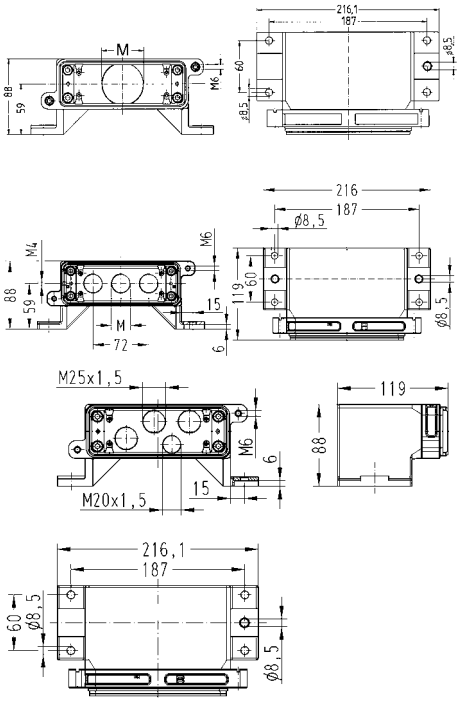

HC-Modular

Features

- Contacts for fine stranded wire
- Low mating forces
- Suitable for HPR® housings

Derating

Current carrying capacity

The current carrying capacity of the connectors is limited by the thermal load capability of the contact element material including the connections and the insulating parts. The derating curve is therefore valid for currents which flow constantly (non-intermittent) through each contact element of the connector evenly, without exceeding the allowed maximum temperature.

Measuring and testing techniques acc. to IEC 60512-5-2

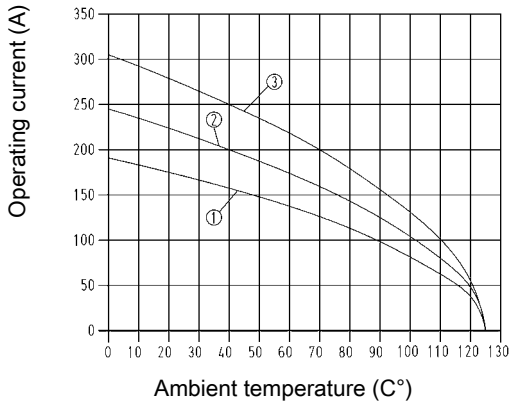

① Wire cross section 35 mm²
② Wire cross section 50 mm²
③ Wire cross section 70 mm²
4 contacts in Han® 24 HPR

Technical characteristics

Electrical data acc. to IEC 61984	**250 A 2000 V 12 kV 3**
Rated current	250 A
Rated voltage	2000 V
Rated impulse voltage	12 kV
Pollution degree	3
Insulation resistance	≥10^{10} Ohm
Limiting temperatures	-40 °C ... 125 °C
Flammability (insert) acc. to UL 94	V 0
Mating cycles	≥500
Material (insert)	polycarbonate
Colour (insert)	RAL 7032 (light grey)
Material (contact)	copper alloy

Specifications and approvals

IEC 60664-1
IEC 61984
EN 50124-1
GL

Details

Crimping tools see chapter 90

Remarks on the crimp technique
The wire gauges mentioned in the catalogue refer to geometric wire gauges of cables.

Removal tool 09 99 000 0332 see chapter 90

2000 V
250 A

Identification	Wire cross section (mm²)	Part number male	Part number female	Drawing Dimensions in mm
Han® HC Modular, Crimp terminal		09 11 001 3021	09 11 001 3121	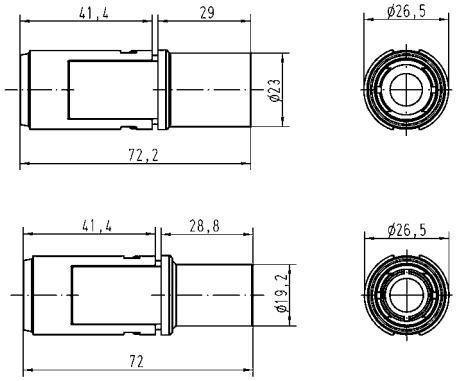 Max. insulation diameter 18 mm
Crimp contact, TC 250, silver plated contacts, contact resistance ≤0.3 mOhm	25 35 50 70	09 11 000 6126 09 11 000 6127 09 11 000 6128 09 11 000 6129	09 11 000 6226 09 11 000 6227 09 11 000 6228 09 11 000 6229	
PE contact, Crimp contact, silver plated contacts, contact resistance ≤0.3 mOhm	35	09 11 000 6104	09 11 000 6204	

Wire gauge	Tool identification	Stripping length A	∅
25 mm²	10	19 mm	7 mm
35 mm²	12	22 mm	8.45 mm
50 mm²	14	22 mm	10.25 mm
70 mm²	16	22 mm	11.75 mm
for stranded wire according to IEC 60 228 Class 5			

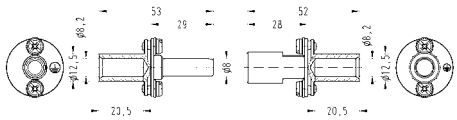

Features

- Hoods/Housings, pressure tight
- Highly EMC resistant
- Screw locking M6
- Field of application: For external electrical interconnections in vehicles, in highly demanding environments and wet areas, as well as for sensitive interconnections that have to be shielded
- Distinguishing feature: colour-coded black, internal seal (RAL 9005)

Technical characteristics

Limiting temperatures	-40 °C ... 125 °C
Protection class acc. to UL 50	NEMA 4/12
Degree of protection acc. to IEC 60529	IP69K
Degree of protection acc. to IEC 60529	IP65 / IP68
Tightening torque (locking)	4 Nm
Corrosion resistance	ASTM B117-09 (500 h)
Material (hoods/housings)	aluminium die-cast, corrosion resistant
Surface (hoods/housings)	powder-coated
Colour (hoods/housings)	RAL 9005 (black)
Material (locking lever)	stainless steel
Material (seal)	NBR
Material (accessories)	metal

Specifications and approvals

Identification	Cable entry	Part number	Drawing Dimensions in mm
Han® HPR, Hoods, top entry, screw locking 	4xM20 4xM25	19 40 024 0473 19 40 024 0474	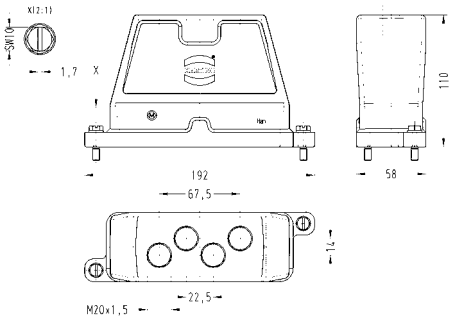 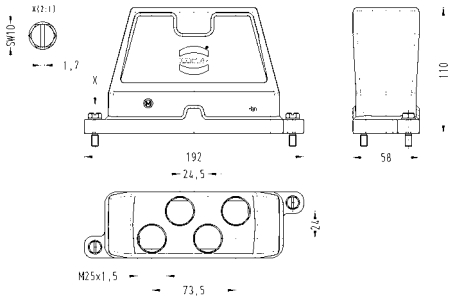
Frame, for male inserts, Han® HC Modular 250, 4 pins 		09 11 000 9925	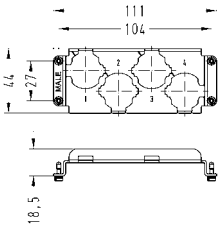 Tightening torque Fixing screws M3: 0.5 Nm

HC-Modular

Identification	Cable entry	Part number	Drawing Dimensions in mm
Han® HPR, Bulkhead mounted housings, screw locking		09 40 024 0311	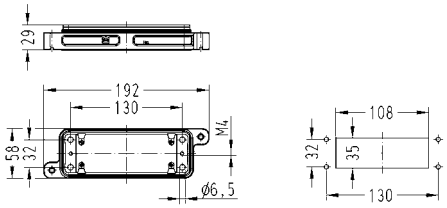
Han® HPR, Surface mounted housings, top entry, screw locking	4xM25	19 40 024 1242	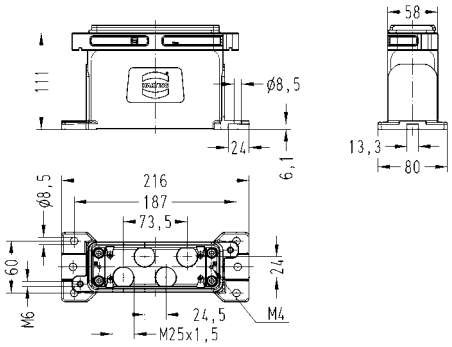
Han® HPR, Mounting frames		09 40 000 9955	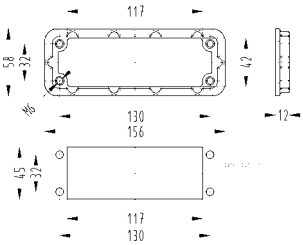
Frame, for female inserts, Han® HC Modular 250, 4 pins		09 11 000 9926	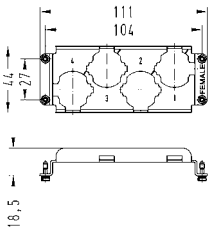 Tightening torque Fixing screws M3: 0.5 Nm

HC-Modular

Identification	Cable entry	Part number	Drawing Dimensions in mm
Han® HPR, Hoods, top entry, screw locking, enlarged	4xM25	19 40 016 0478	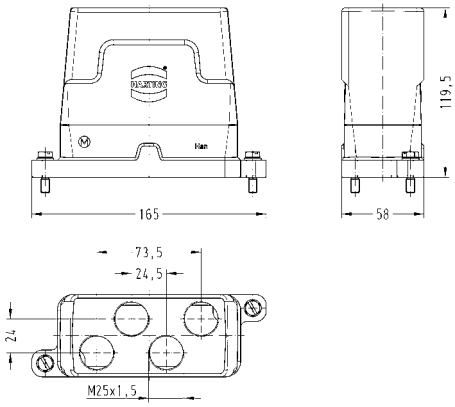
Frame, for male inserts, Han® HC Modular 250, 4 pins		09 11 000 9937	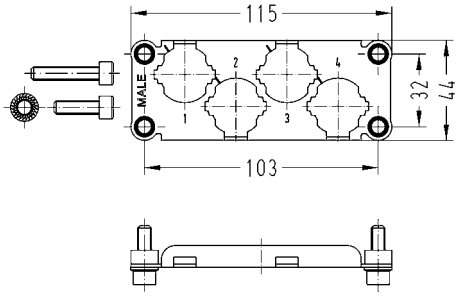 Tightening torque Fixing screws M6: 10 Nm

HC-Modular

Identification	Cable entry	Part number	Drawing Dimensions in mm
Han® HPR, Bulkhead mounted housings, screw locking, enlarged		09 40 016 0368	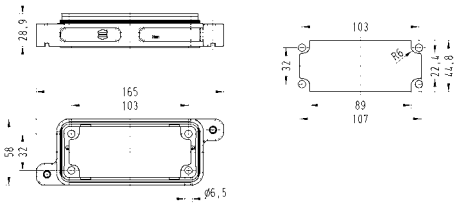
Han® HPR, Surface mounted housings, top entry, screw locking, enlarged	1xM25	19 40 016 0978	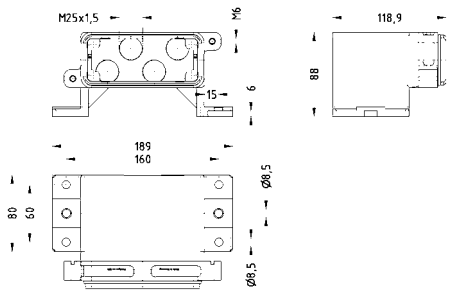
Han® HPR, Mounting frames		09 40 000 9956	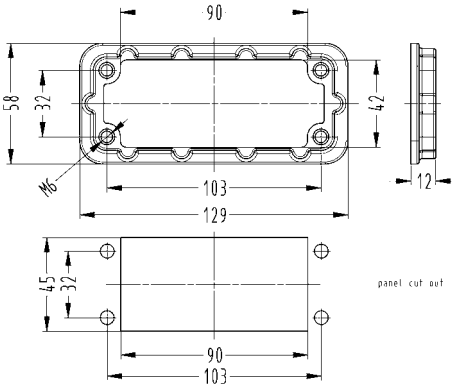
Frame, for female inserts, Han® HC Modular 250, 4 pins		09 11 000 9938	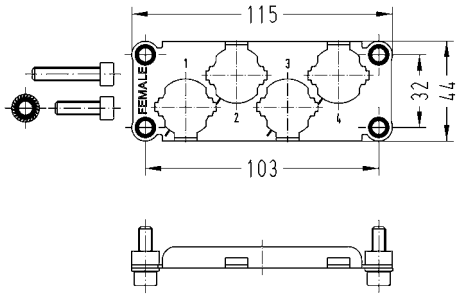 Tightening torque Fixing screws M6: 10 Nm

HC-Modular

Features

- Contacts for fine stranded wire
- Low mating forces
- Suitable for HPR® housings
- UL approvals for axial-screw and screw terminal

Derating

Current carrying capacity

The current carrying capacity of the connectors is limited by the thermal load capability of the contact element material including the connections and the insulating parts. The derating curve is therefore valid for currents which flow constantly (non-intermittent) through each contact element of the connector evenly, without exceeding the allowed maximum temperature.

Measuring and testing techniques acc. to IEC 60512-5-2

Crimp terminal

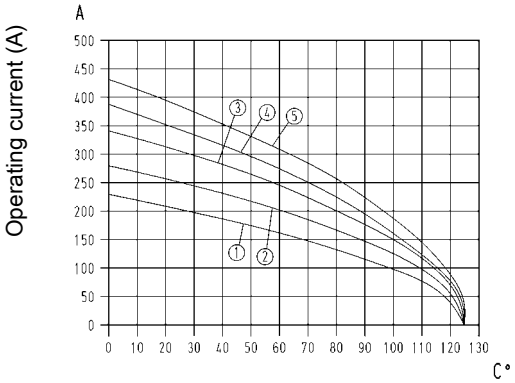

Ambient temperature (C°)

① Wire cross section 35 mm²
② Wire cross section 50 mm²
③ Wire cross section 70 mm²
④ Wire cross section 95 mm²
⑤ Wire cross section 120 mm²
three contacts in Han® 24 HPR

Axial screw termination
Screw terminal

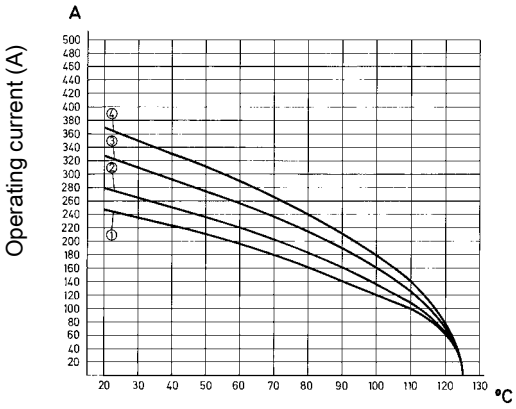

Ambient temperature (C°)

① Wire cross section 50 mm²
② Wire cross section 70 mm²
③ Wire cross section 95 mm²
④ Wire cross section 120 mm²
three contacts in Han® 24 HPR

Technical characteristics

Electrical data acc. to IEC 61984	**350 A 2000 V 12 kV 3**
Rated current	350 A
Rated voltage	2000 V
Rated impulse voltage	12 kV
Pollution degree	3
Insulation resistance	≥10^{10} Ohm
Limiting temperatures	-40 °C ... 125 °C
Flammability (insert) acc. to UL 94	V 0
Mating cycles	≥500
Material (insert)	polycarbonate and polyamide
Colour (insert)	RAL 7032 (light grey)
Material (contact)	copper alloy

Specifications and approvals

IEC 60664-1
IEC 61984

Details

Electrical data up to 350 A 4000 V 18 kV 3 by using a hexagonal adapter and the HARTING cable gland, in order to realize the clearance and creepage distance.

Crimping tools see chapter 90

Hex key 09 99 000 0371 see chapter 90

Remarks on the axial screw technique

The wire gauges mentioned in the catalogue refer to geometric wire gauges of cables.

Remarks on the crimp technique

The wire gauges mentioned in the catalogue refer to geometric wire gauges of cables.

2000 V
350 A

Identification	Wire cross section (mm²)	Part number male	Part number female	Drawing Dimensions in mm
Han® HC Modular, Crimp terminal 		09 11 001 3001	09 11 001 3101	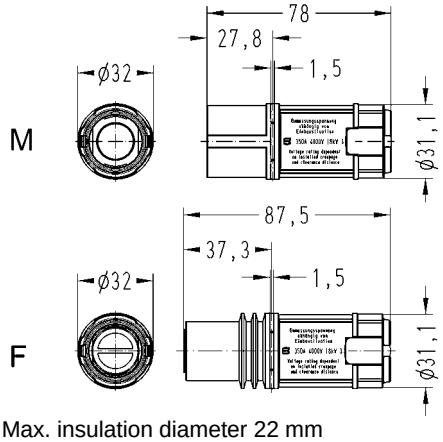 Max. insulation diameter 22 mm
Crimp contact, TC 350, silver plated contacts, contact resistance ≤0.3 mOhm 	25 35 50 70 95 120	09 11 000 6139 09 11 000 6140 09 11 000 6141 09 11 000 6142 09 11 000 6143 09 11 000 6144	09 11 000 6239 09 11 000 6240 09 11 000 6241 09 11 000 6242 09 11 000 6243 09 11 000 6244	

Wire gauge	Ø	Stripping length
25 mm²	7	26 mm
35 mm²	8.2	26 mm
50 mm²	10	28 mm
70 mm²	11.5	28 mm
95 mm²	13.5	30 mm
120 mm²	15.5	24 mm

for stranded wire according to IEC 60 228 Class 5
Crimp zone acc. to DIN 46235

2000 V
350 A

Identification	Wire cross section (mm²)	Part number male	Part number female	Drawing Dimensions in mm
Han® HC Modular, Screw terminal, silver plated contacts, contact resistance ≤0.2 mOhm 	35 – 120	09 11 001 2655	09 11 001 2755	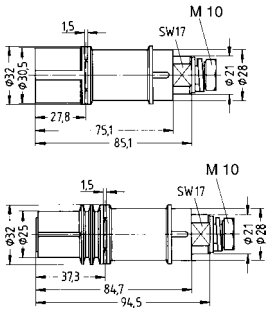 Tightening torque 14 Nm for cable lug ≤ 120 mm² Please ensure to hold up the contact with a wrench size 17 to apply the tightening torque
Han® HC Modular, Axial screw terminal, silver plated contacts, contact resistance ≤0.2 mOhm 	35 – 70 95 – 120	09 11 001 2651 09 11 001 2652	09 11 001 2751 09 11 001 2752	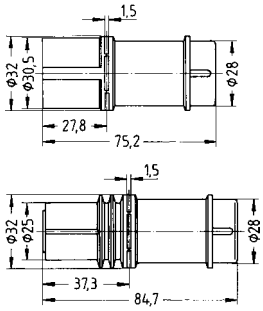 Tightening torque mm² 35 50 70 95 120 Nm 8 10 12 14 16 Max. insulation diameter 19.5 mm Stripping length 19...20 mm
PE contact, Axial screw contact, silver plated contacts, contact resistance ≤0.2 mOhm 	35 – 70	09 11 000 6156	09 11 000 6256	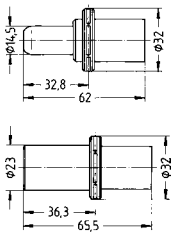 Tightening torque mm² 35 50 70 Nm 8 10 12 Stripping length 19...20 mm

HC-Modular

Features

- Hoods/Housings, pressure tight
- Highly EMC resistant
- Screw locking M6
- Field of application: For external electrical interconnections in vehicles, in highly demanding environments and wet areas, as well as for sensitive interconnections that have to be shielded
- Distinguishing feature: colour-coded black, internal seal (RAL 9005)

Technical characteristics

Limiting temperatures	-40 °C ... 125 °C
Protection class acc. to UL 50	NEMA 4/12
Degree of protection acc. to IEC 60529	IP69K
Degree of protection acc. to IEC 60529	IP65 / IP68
Tightening torque (locking)	4 Nm
Corrosion resistance	ASTM B117-09 (500 h)
Material (hoods/housings)	aluminium die-cast, corrosion resistant
Surface (hoods/housings)	powder-coated
Colour (hoods/housings)	RAL 9005 (black)
Material (locking lever)	stainless steel
Material (seal)	NBR
Material (accessories)	metal

Specifications and approvals

Identification	Cable entry	Size	Part number	Drawing Dimensions in mm
Han® HPR, Hoods, top entry, screw locking 	1xM25 1xM32		19 40 006 0411 19 40 006 0412	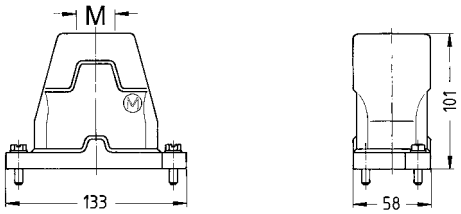
Han® HPR, Bulkhead mounted housings, screw locking 			09 40 006 0311	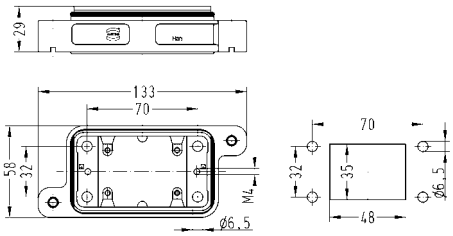
Han® HPR, Mounting frames 			09 40 000 9901	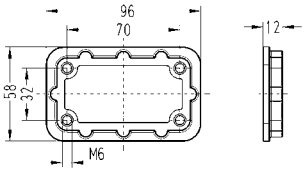
Hexagonal adapter, with O-ring to reach the electrical data up to 350 A 4000 V 18 kV 3		M25 M32	19 36 000 5134 19 36 000 5135	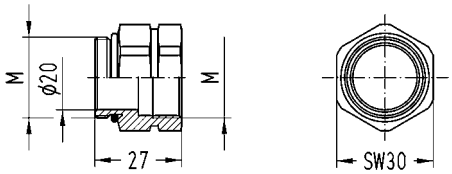
Frame, 1 pin, Han® HC Modular 350 			09 11 000 9951	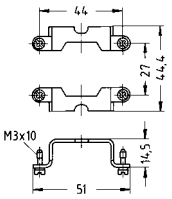 Tightening torque Fixing screws M3: 0.5 Nm

HC-Modular

Identification	Cable entry	Size	Part number	Drawing Dimensions in mm
Han® HPR, Hoods, top entry, screw locking	2xM25		19 40 016 0431	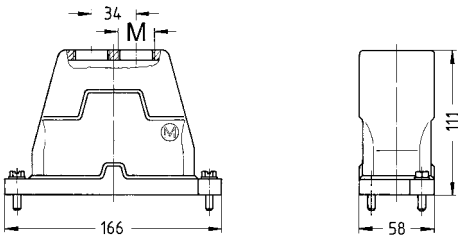
Han® HPR, Bulkhead mounted housings, screw locking			09 40 016 0311	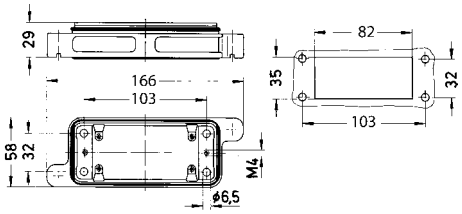
Han® HPR, Mounting frames, screw locking			09 40 000 9903	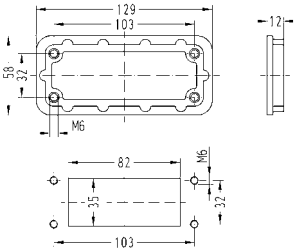 Panel cut out
Hexagonal adapter, with O-ring to reach the electrical data up to 350 A 4000 V 18 kV 3		M25	19 36 000 5134	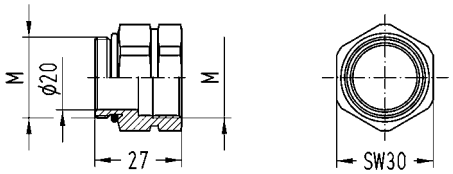

HC-Modular

Identification	Cable entry	Size	Part number	Drawing Dimensions in mm
Frame, 2 pins, Han® HC Modular 350 			09 11 000 9952	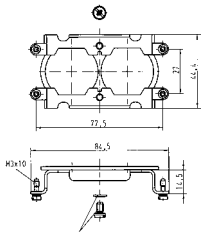 Tightening torque Fixing screws M3: 0.5 Nm Tightening torque Fixing screws M4: 1.5 Nm enclosed separately

Identification	Cable entry	Size	Part number	Drawing Dimensions in mm
Han® HPR, Hoods, top entry, screw locking 	2xM32		19 40 024 0432	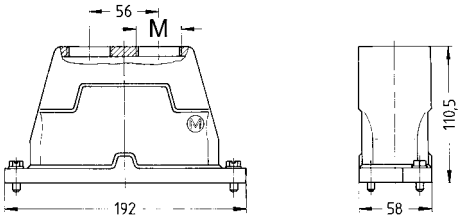
Han® HPR, Bulkhead mounted housings, screw locking 			09 40 024 0311	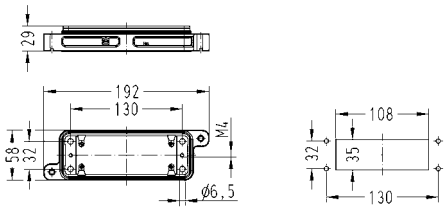
Han® HPR, Mounting frames 			09 40 000 9904	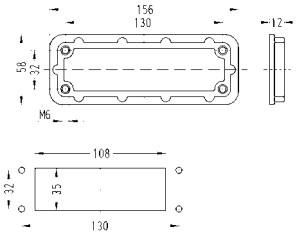 Panel cut out
Hexagonal adapter, with O-ring to reach the electrical data up to 350 A 4000 V 18 kV 3		M32	19 36 000 5135	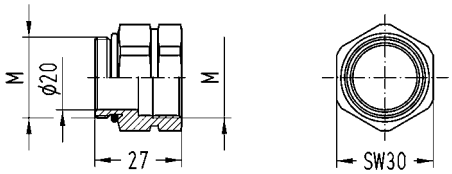

HC-Modular

Identification	Cable entry	Size	Part number	Drawing Dimensions in mm
Frame, 2 pins, Han® HC Modular 350 			09 11 000 9956	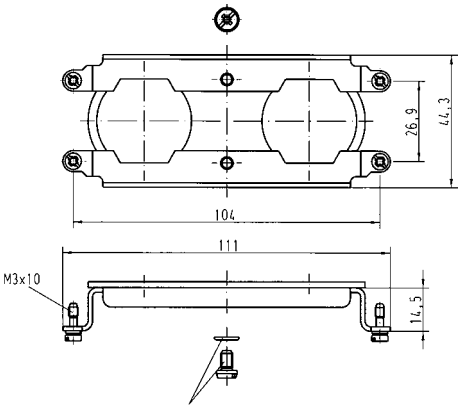 Tightening torque Fixing screws M3: 0.5 Nm Tightening torque Fixing screws M4: 1.5 Nm enclosed separately

Identification	Cable entry	Size	Part number	Drawing Dimensions in mm
Han® HPR, Hoods, top entry, screw locking, high construction 	3xM32		19 40 024 0467	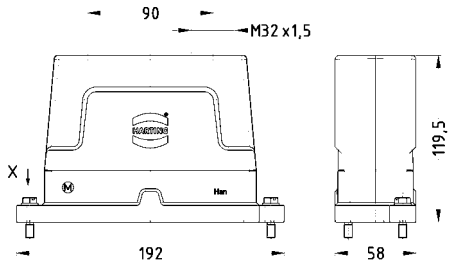
Han® HPR, Hoods, top entry, screw locking 	3xM25		19 40 024 0461	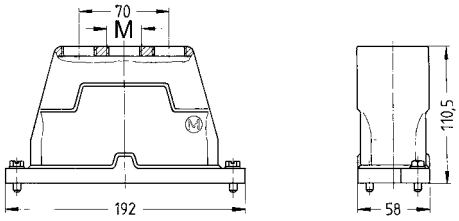
Hexagonal adapter, with O-ring to reach the electrical data up to 350 A 4000 V 18 kV 3		M25 M32	19 36 000 5134 19 36 000 5135	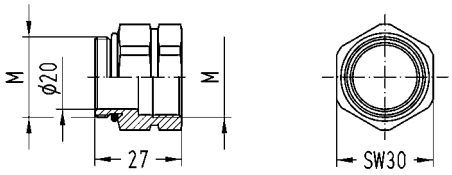
Frame, 3 pins, Han® HC Modular 350 			09 11 000 9963	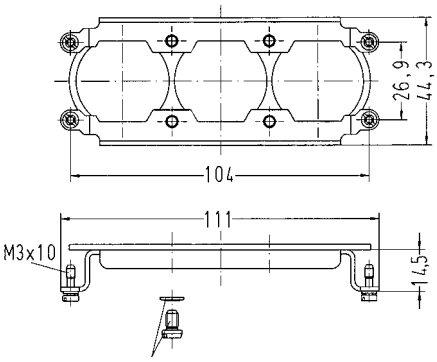 Tightening torque Fixing screws M3: 0.5 Nm Tightening torque Fixing screws M4: 1.5 Nm enclosed separately

HC-Modular

Identification	Cable entry	Size	Part number	Drawing Dimensions in mm
Han® HPR, Bulkhead mounted housings, screw locking			09 40 024 0311	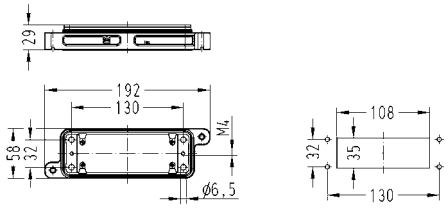
Han® HPR, Surface mounted housings, straight version, top entry, screw locking	3xM25		19 40 024 1231	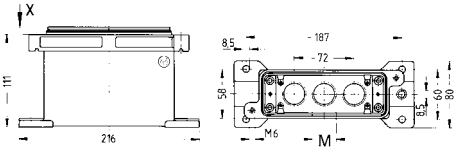
Han® HPR, Surface mounted housings, horizontal version, top entry, screw locking	3xM25		19 40 024 0931	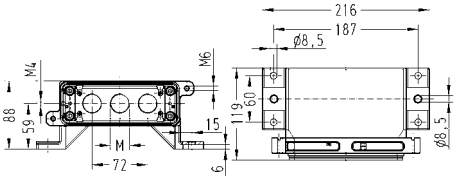
Han® HPR, Mounting frames			09 40 000 9904	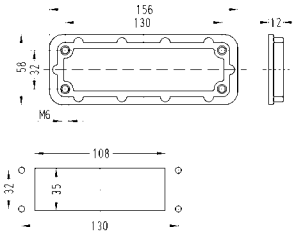 Panel cut out
Hexagonal adapter, with O-ring to reach the electrical data up to 350 A 4000 V 18 kV 3		M25	19 36 000 5134	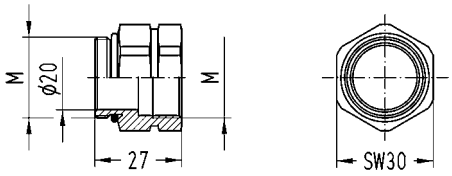

HC-Modular

Identification	Cable entry	Size	Part number	Drawing Dimensions in mm
Frame, 3 pins, Han® HC Modular 350 			09 11 000 9963	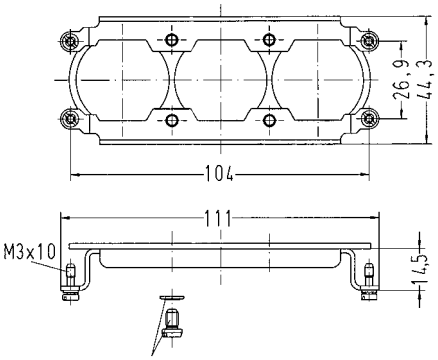 Tightening torque Fixing screws M3: 0.5 Nm Tightening torque Fixing screws M4: 1.5 Nm enclosed separately

Identification	Cable entry	Size	Part number	Drawing Dimensions in mm
Han® HPR, Hoods, top entry, screw locking, enlarged 	3xM32		19 40 024 0468	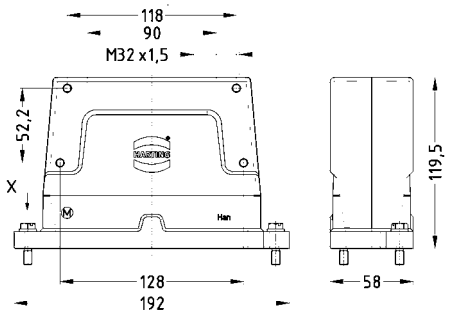
Hexagonal adapter, with O-ring to reach the electrical data up to 350 A 4000 V 18 kV 3		M32	19 36 000 5135	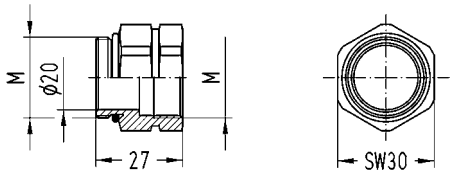
Frame, for male inserts, Han® HC Modular 350, 3 pins Range of delivery: 4 x M4 screw, 4 x washer SK S4, 4 x washer SK S6, 4 x cheese-head screw M6 x 20, 4 x cheese-head screw M6 x 25 			09 11 000 9957	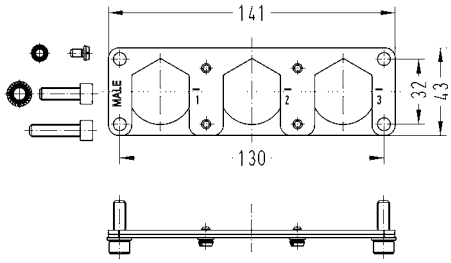 Tightening torque Fixing screws M6: 10 Nm Tightening torque Screws M4: 1.5 Nm
Frame, for female inserts, Han® HC Modular 350, 3 pins Range of delivery: 4 x M4 screw, 4 x washer SK S4, 4 x washer SK S6, 4 x cheese-head screw M6 x 20, 4 x cheese-head screw M6 x 25 			09 11 000 9958	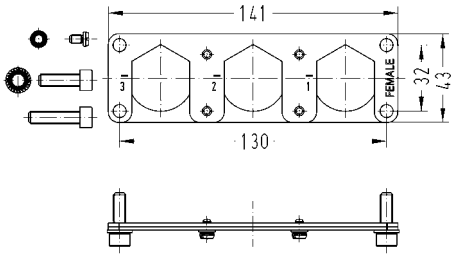 Tightening torque Fixing screws M6: 10 Nm Tightening torque Screws M4: 1.5 Nm

Identification	Cable entry	Part number	Drawing Dimensions in mm
Han® HPR, Bulkhead mounted housings, screw locking, enlarged 		09 40 024 0368	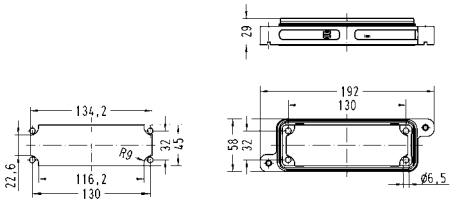
Han® HPR, Surface mounted housings, top entry, screw locking, enlarged, horizontal version 	3xM32	19 40 024 0968	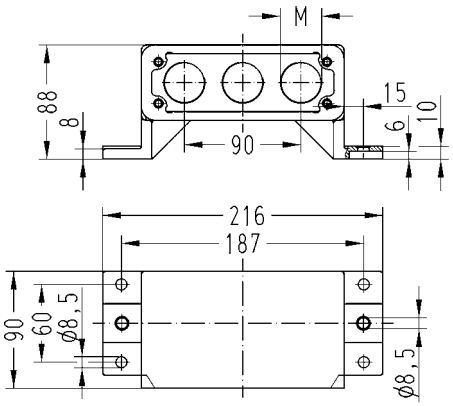 Required housing, bulkhead mounting, 09 40 024 0368 not included, must be ordered separately
Han® HPR, Mounting frames 		09 40 000 9904	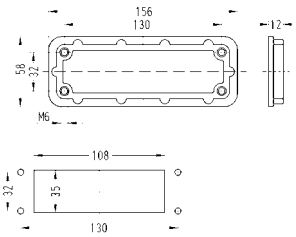 Panel cut out

HC-Modular

Identification	Cable entry	Part number	Drawing Dimensions in mm
Frame, for male inserts, Han® HC Modular 350, 3 pins Range of delivery: 4 x M4 screw, 4 x washer SK S4, 4 x washer SK S6, 4 x cheese-head screw M6 x 20, 4 x cheese-head screw M6 x 25 		09 11 000 9957	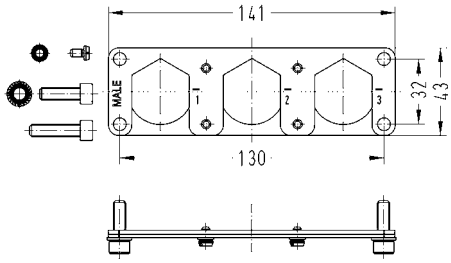 Tightening torque Fixing screws M6: 10 Nm Tightening torque Screws M4: 1.5 Nm
Frame, for female inserts, Han® HC Modular 350, 3 pins Range of delivery: 4 x M4 screw, 4 x washer SK S4, 4 x washer SK S6, 4 x cheese-head screw M6 x 20, 4 x cheese-head screw M6 x 25 		09 11 000 9958	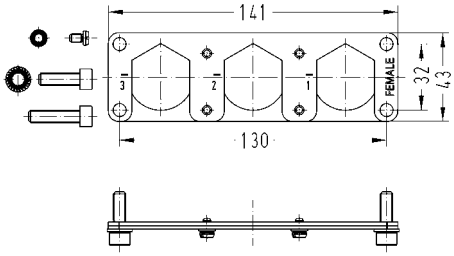 Tightening torque Fixing screws M6: 10 Nm Tightening torque Screws M4: 1.5 Nm

Identification	Cable entry	Size	Part number	Drawing Dimensions in mm
Han® HPR, Hoods, top entry, screw locking, enlarged 	4xM25		19 40 024 0478	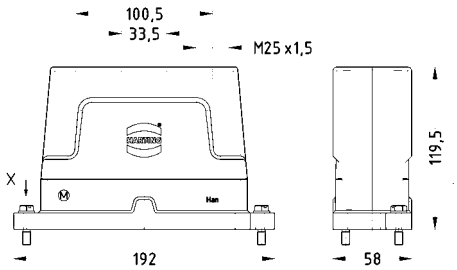
Hexagonal adapter, with O-ring to reach the electrical data up to 350 A 4000 V 18 kV 3		M25	19 36 000 5134	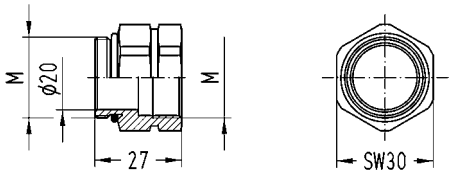
Frame, for male inserts, Han® HC Modular 350, 4 pins Range of delivery: 4 x M4 screw, 4 x washer SK S4, 4 x washer SK S6, 4 x cheese-head screw M6 x 20, 4 x cheese-head screw M6 x 35, 4 x heat shrink tube 			09 11 000 9964	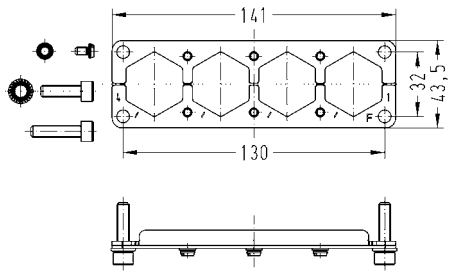 Tightening torque Fixing screws M6: 10 Nm Tightening torque Screws M4: 1.5 Nm

HC-Modular

Identification	Cable entry	Size	Part number	Drawing Dimensions in mm
Frame, for female inserts, Han® HC Modular 350, 4 pins Range of delivery: 4 x M4 screw, 4 x washer SK S4, 4 x washer SK S6, 4 x cheese-head screw M6 x 20, 4 x cheese-head screw M6 x 35, 4 x heat shrink tube 			09 11 000 9965	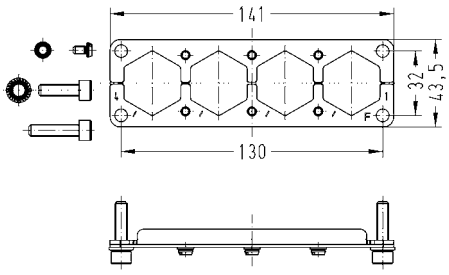 Tightening torque Fixing screws M6: 10 Nm Tightening torque Screws M4: 1.5 Nm

Identification	Cable entry	Part number	Drawing Dimensions in mm
Han® HPR, Bulkhead mounted housings, screw locking, enlarged		09 40 024 0368	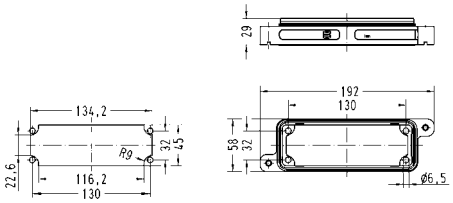
Han® HPR, Surface mounted housings, top entry, screw locking, enlarged, horizontal version	4xM25	19 40 024 0978	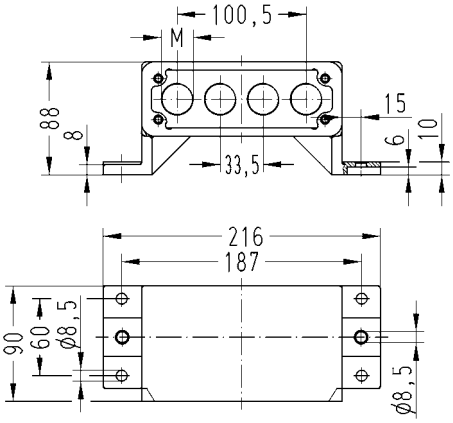 Required housing, bulkhead mounting, 09 40 024 0368 not included, must be ordered separately
Han® HPR, Mounting frames		09 40 000 9904	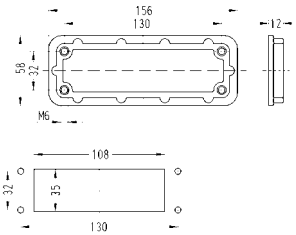 Panel cut out

HC-Modular

Identification	Cable entry	Part number	Drawing Dimensions in mm
Frame, for male inserts, Han® HC Modular 350, 4 pins Range of delivery: 4 x M4 screw, 4 x washer SK S4, 4 x washer SK S6, 4 x cheese-head screw M6 x 20, 4 x cheese-head screw M6 x 35, 4 x heat shrink tube 		09 11 000 9964	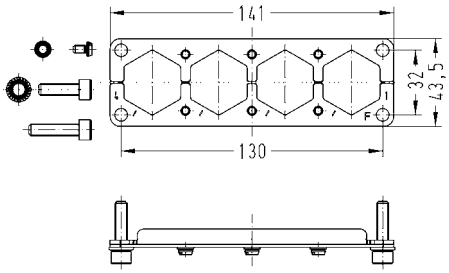 Tightening torque Fixing screws M6: 10 Nm Tightening torque Screws M4: 1.5 Nm
Frame, for female inserts, Han® HC Modular 350, 4 pins Range of delivery: 4 x M4 screw, 4 x washer SK S4, 4 x washer SK S6, 4 x cheese-head screw M6 x 20, 4 x cheese-head screw M6 x 35, 4 x heat shrink tube 		09 11 000 9965	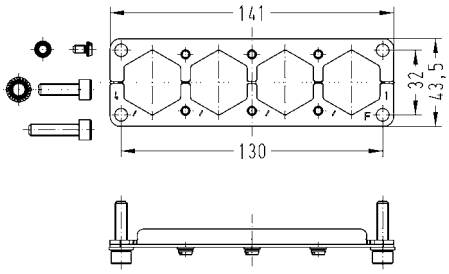 Tightening torque Fixing screws M6: 10 Nm Tightening torque Screws M4: 1.5 Nm

Features

- Hoods/Housings for higher environmental requirements

Technical characteristics

Limiting temperatures	-40 °C ... 125 °C
Protection class acc. to UL 50	NEMA type 4/4X/12
Degree of protection acc. to IEC 60529	IP65
Corrosion resistance	ASTM B117-09 (500 h)
Material (hoods/housings)	aluminium
Surface (hoods/housings)	powder-coated
Colour (hoods/housings)	RAL 9005 (black)
Material (locking lever)	stainless steel
Material (seal)	FPM
Material (accessories)	metal

Specifications and approvals

single locking lever

Identification	Cable entry	Part number	Drawing Dimensions in mm
Han® M, Hoods, top entry	4xM25	19 37 048 0401	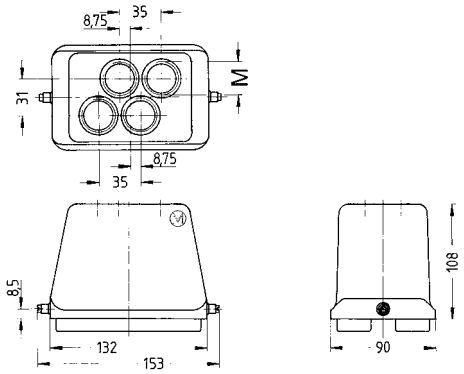
Frame, for 4 x HC 350 contacts + 2 x Han® Q 5/0		09 11 000 9954	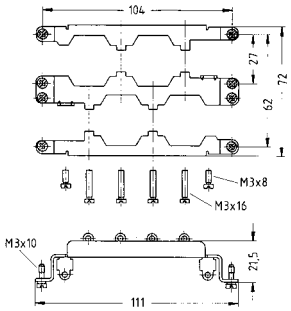 Tightening torque Fixing screws M3: 0.5 Nm Tightening torque Fixing screws Han® Q 5/0: 0.25 Nm Tightening torque Cross-tying screws 1.5 Nm

single locking lever

Identification	Part number	Drawing Dimensions in mm
Han® M, Bulkhead mounted housings	09 37 048 0301	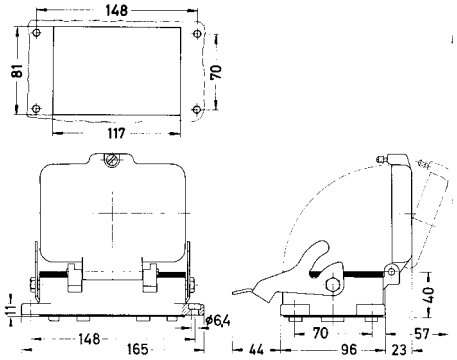
Frame, for 4 x HC 350 contacts + 2 x Han® Q 5/0	09 11 000 9955	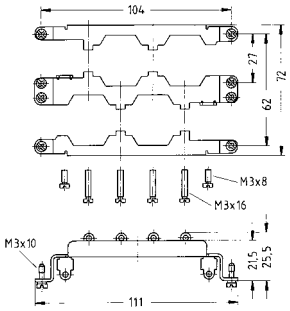 Tightening torque Fixing screws M3: 0.5 Nm Tightening torque Fixing screws Han® Q 5/0: 0.25 Nm Tightening torque Cross-tying screws 1.5 Nm

Features

- Contacts for fine stranded wire
- Low mating forces
- Suitable for HPR® housings
- UL approvals for axial-screw and screw terminal

Derating

Current carrying capacity

The current carrying capacity of the connectors is limited by the thermal load capability of the contact element material including the connections and the insulating parts. The derating curve is therefore valid for currents which flow constantly (non-intermittent) through each contact element of the connector evenly, without exceeding the allowed maximum temperature.

Measuring and testing techniques acc. to IEC 60512-5-2

Crimp terminal
three contacts in Han® 24 HPR

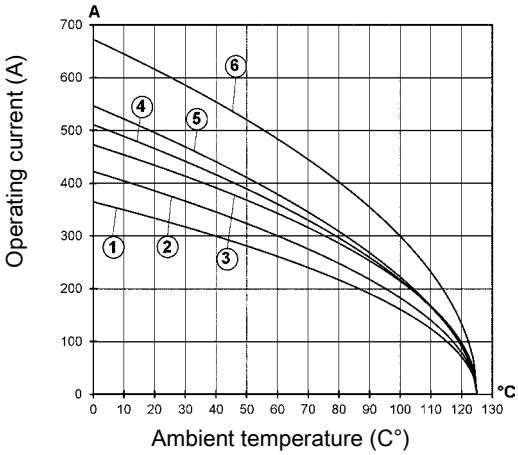

Screw terminal / Axial screw terminal
three contacts in Han® 24 HPR

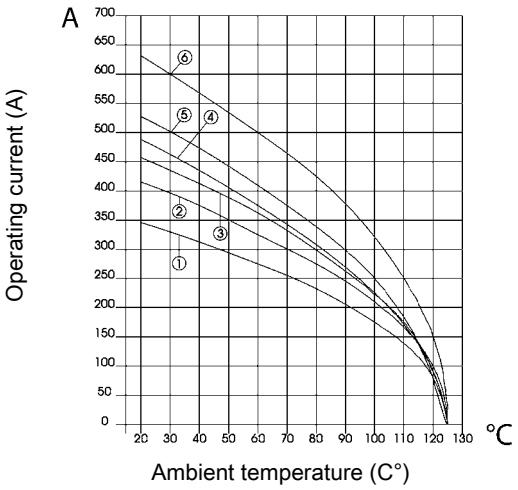

① Wire cross section 70 mm²
② Wire cross section 95 mm²
③ Wire cross section 120 mm²
④ Wire cross section 150 mm²
⑤ Wire cross section 185 mm²
⑥ Wire cross section 240 mm²

Technical characteristics

Electrical data acc. to IEC 61984	**650 A 4000 V 18 kV 3**
Rated current	650 A
Rated voltage	4000 V
Rated impulse voltage	18 kV
Pollution degree	3
Insulation resistance	≥10^{10} Ohm
Limiting temperatures	-40 °C ... 125 °C
Flammability (insert) acc. to UL 94	V 0
Mating cycles	≥500
Material (insert)	polycarbonate and polyamide
Colour (insert)	RAL 7032 (light grey)
Material (contact)	copper alloy

Specifications and approvals

IEC 60664-1
IEC 61984

Details

Crimping tools see chapter 90

Hex key 09 99 000 0372 see chapter 90

Remarks on the axial screw technique
The wire gauges mentioned in the catalogue refer to geometric wire gauges of cables.

Remarks on the crimp technique
The wire gauges mentioned in the catalogue refer to geometric wire gauges of cables.

4000 V
650 A

Identification	Wire cross section (mm²)	Part number male	Part number female	Drawing Dimensions in mm
Han® HC Modular, Crimp terminal 		09 11 001 3012	09 11 001 3112	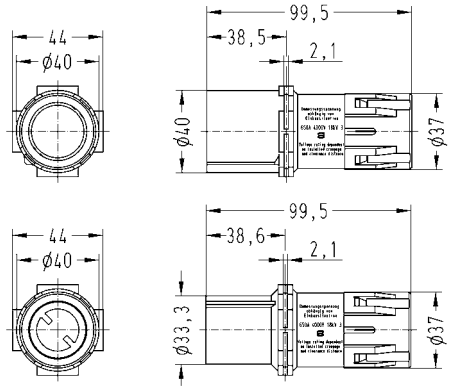 Max. insulation diameter 70...185 mm²: 27 mm Max. insulation diameter 240 mm²: 32 mm
Crimp contact, TC 650, silver plated contacts, contact resistance ≤0.3 mOhm 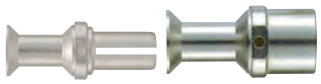	70 95 120 150 185 240	09 11 000 6161 09 11 000 6162 09 11 000 6163 09 11 000 6164 09 11 000 6165 09 11 000 6168	09 11 000 6261 09 11 000 6262 09 11 000 6263 09 11 000 6264 09 11 000 6265 09 11 000 6268	

Wire gauge	⌀	Stripping length A
70 mm²	11.5	42 mm
95 mm²	13.5	42 mm
120 mm²	15.5	42 mm
150 mm²	17	42 mm
185 mm²	19	42 mm
240 mm²	21.5	46 mm
for stranded wire according to IEC 60 228 Class 5		

Crimp zone acc. to DIN 46235

4000 V
650 A

Identification	Wire cross section (mm²)	Part number male	Part number female	Drawing Dimensions in mm
Han® HC Modular, Screw terminal, silver plated contacts, contact resistance ≤0.2 mOhm 	70 – 240	09 11 001 2675	09 11 001 2775	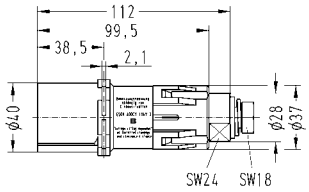 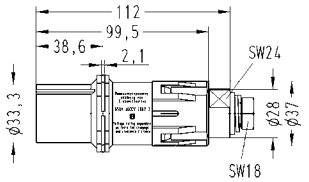 Tightening torque 16...18 for cable lug ≤ 240 mm² Please ensure to hold up the contact with a wrench size 24 to apply the tightening torque
Han® HC Modular, Axial screw terminal, silver plated contacts, contact resistance ≤0.2 mOhm 	70 – 120 150 – 185	09 11 001 2671 09 11 001 2672	09 11 001 2771 09 11 001 2772	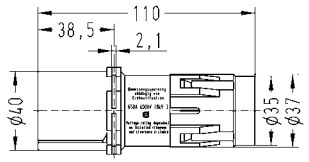 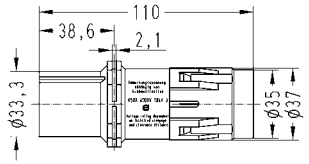 Tightening torque mm² 70 95 120 150 185 Nm 12 14 16 17 18 Stripping length 23...25 Max. insulation diameter 26.5 mm

HC-Modular

Features

- Hoods/Housings, pressure tight
- Highly EMC resistant
- Screw locking M6
- Field of application: For external electrical interconnections in vehicles, in highly demanding environments and wet areas, as well as for sensitive interconnections that have to be shielded
- Distinguishing feature: colour-coded black, internal seal (RAL 9005)

Technical characteristics

Limiting temperatures	-40 °C ... 125 °C
Protection class acc. to UL 50	NEMA 4/12
Degree of protection acc. to IEC 60529	IP69K
Degree of protection acc. to IEC 60529	IP65 / IP68
Tightening torque (locking)	4 Nm
Corrosion resistance	ASTM B117-09 (500 h)
Material (hoods/housings)	aluminium die-cast, corrosion resistant
Surface (hoods/housings)	powder-coated
Colour (hoods/housings)	RAL 9005 (black)
Material (locking lever)	stainless steel
Material (seal)	NBR
Material (accessories)	metal

Specifications and approvals

GL, UL

Identification	Cable entry	Part number	Drawing Dimensions in mm
Han® HPR, Hoods, top entry, screw locking	1xM40	19 40 006 0418	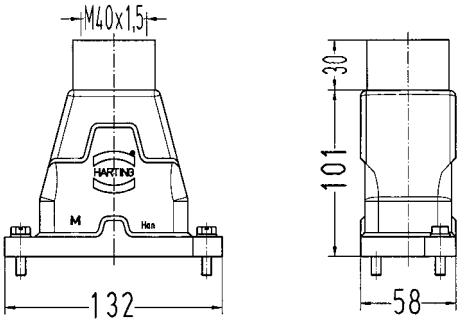
Han® HPR, Bulkhead mounted housings, screw locking		09 40 006 0314	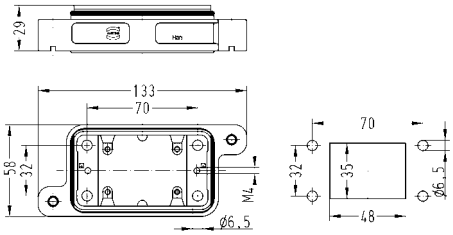
Frame, 1 pin, Han® HC Modular 650		09 11 000 9971	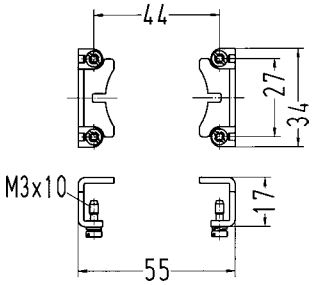 Tightening torque Fixing screws M3: 0.5 Nm

HC-Modular

Identification	Cable entry	Part number	Drawing Dimensions in mm
Han® HPR, Hoods, top entry, screw locking	2xM40	19 40 024 0438	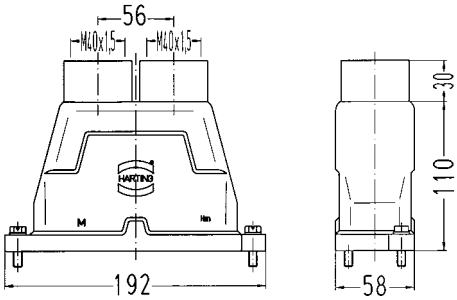
Frame, 2 pins, Han® HC Modular 650		09 11 000 9972	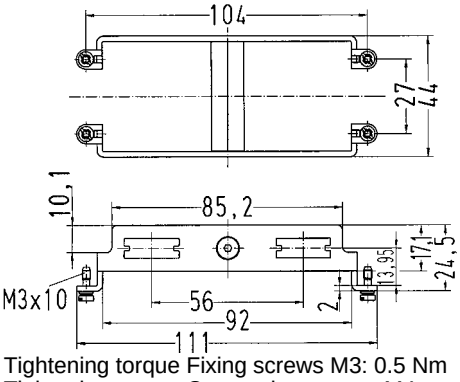 Tightening torque Fixing screws M3: 0.5 Nm Tightening torque Cross-tying screws M4: 1.5 Nm

Identification	Part number	Drawing Dimensions in mm
Han® HPR, Bulkhead mounted housings, screw locking	09 40 024 0311	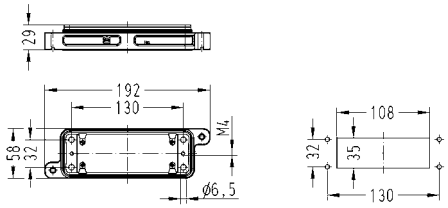
Han® HPR, Mounting frames	09 40 000 9955	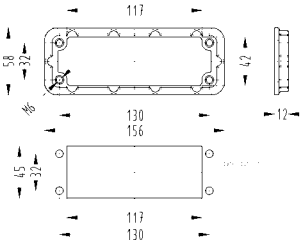
Frame, 2 pins, Han® HC Modular 650	09 11 000 9972	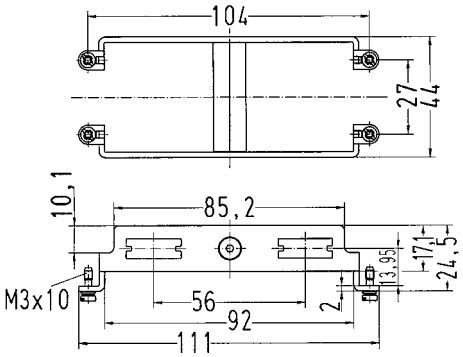 Tightening torque Fixing screws M3: 0.5 Nm Tightening torque Cross-tying screws M4: 1.5 Nm

HC-Modular

Identification	Cable entry	Size	Part number	Drawing Dimensions in mm
Han® HPR, Hoods, top entry, screw locking, enlarged 	3xM32		19 40 024 0468	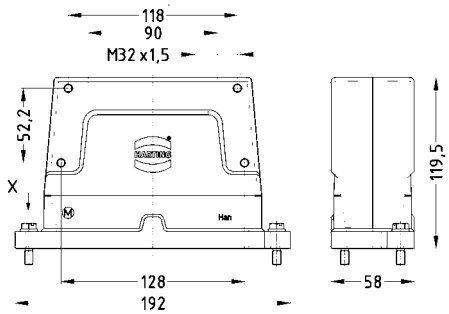
Hexagonal adapter, with O-ring to reach the electrical data up to 350 A 4000 V 18 kV 3		M32	19 36 000 5135	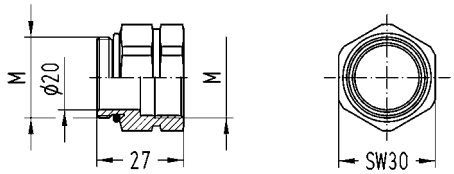
Frame, for male inserts, Han® HC Modular 650, 3 pins Range of delivery: 4 x M4 screw, 4 x washer SK S4, 4 x washer SK S6, 4 x cheese-head screw M6 x 20, 4 x cheese-head screw M6 x 35 			09 11 000 9973	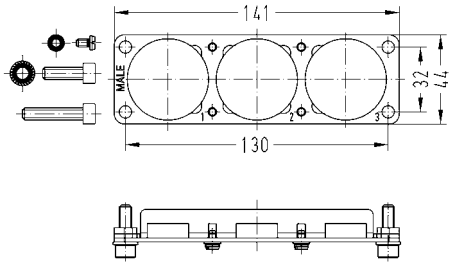 Tightening torque Fixing screws M6: 10 Nm Tightening torque Screws M4: 1.5 Nm
Frame, for female inserts, Han® HC Modular 650, 3 pins Range of delivery: 4 x M4 screw, 4 x washer SK S4, 4 x washer SK S6, 4 x cheese-head screw M6 x 20, 4 x cheese-head screw M6 x 35 			09 11 000 9974	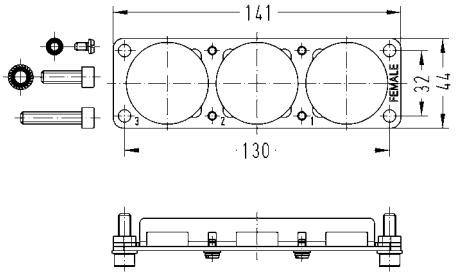 Tightening torque Fixing screws M6: 10 Nm Tightening torque Screws M4: 1.5 Nm

Identification	Cable entry	Size	Part number	Drawing Dimensions in mm
Han® HPR, Surface mounted housings, top entry, screw locking, enlarged, horizontal version 	3xM32		19 40 024 0968	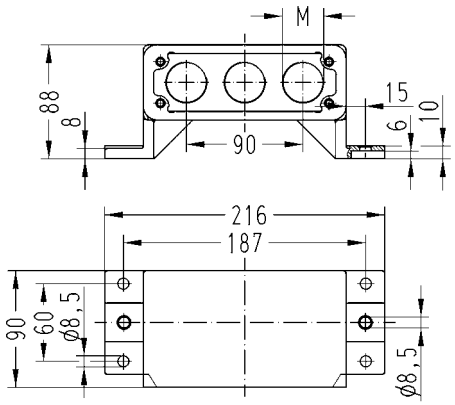 Required housing, bulkhead mounting, 09 40 024 0368 not included, must be ordered separately
Hexagonal adapter, with O-ring to reach the electrical data up to 350 A 4000 V 18 kV 3		M32	19 36 000 5135	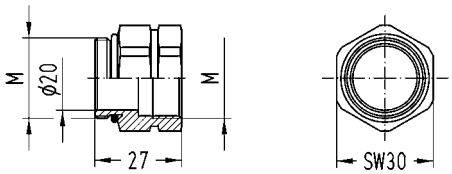
Frame, for male inserts, Han® HC Modular 650, 3 pins Range of delivery: 4 x M4 screw, 4 x washer SK S4, 4 x washer SK S6, 4 x cheese-head screw M6 x 20, 4 x cheese-head screw M6 x 35 			09 11 000 9973	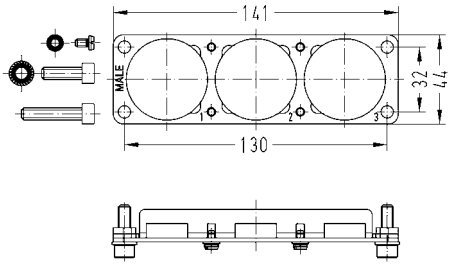 Tightening torque Fixing screws M6: 10 Nm Tightening torque Screws M4: 1.5 Nm

HC-Modular

Identification	Cable entry	Size	Part number	Drawing Dimensions in mm
Frame, for female inserts, Han® HC Modular 650, 3 pins Range of delivery: 4 x M4 screw, 4 x washer SK S4, 4 x washer SK S6, 4 x cheese-head screw M6 x 20, 4 x cheese-head screw M6 x 35 			09 11 000 9974	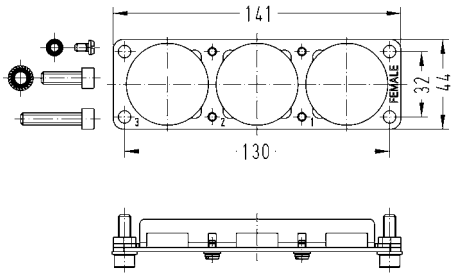 Tightening torque Fixing screws M6: 10 Nm Tightening torque Screws M4: 1.5 Nm

Identification	Part number	Drawing Dimensions in mm
Han® HPR, Bulkhead mounted housings, screw locking, enlarged	09 40 024 0368	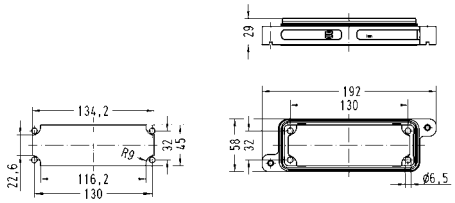
Han® HPR, Mounting frames	09 40 000 9955	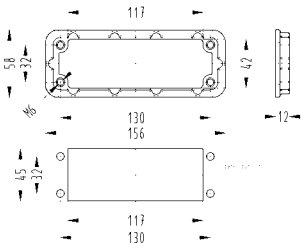
Frame, for male inserts, Han® HC Modular 650, 3 pins Range of delivery: 4 x M4 screw, 4 x washer SK S4, 4 x washer SK S6, 4 x cheese-head screw M6 x 20, 4 x cheese-head screw M6 x 35	09 11 000 9973	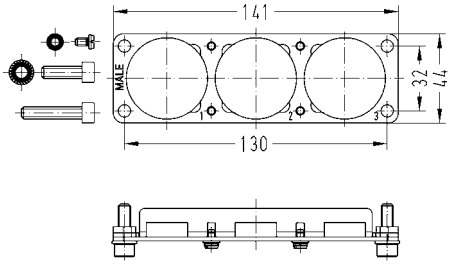 Tightening torque Fixing screws M6: 10 Nm Tightening torque Screws M4: 1.5 Nm
Frame, for female inserts, Han® HC Modular 650, 3 pins Range of delivery: 4 x M4 screw, 4 x washer SK S4, 4 x washer SK S6, 4 x cheese-head screw M6 x 20, 4 x cheese-head screw M6 x 35	09 11 000 9974	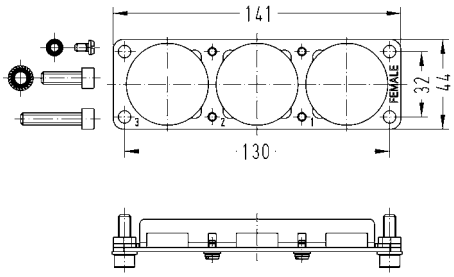 Tightening torque Fixing screws M6: 10 Nm Tightening torque Screws M4: 1.5 Nm

Features

- Hoods/Housings for higher EMC requirements
- Easy assembly due to split hood and surface mounting housing
- Many assembly possibilities due to separate assembly panels
- External termination of PE termination on hood and surface mounting housing
- Ideal motor/drive connector for transportation sector
- Secure and a visible connection of screening braid of shielded cables

Technical characteristics

Limiting temperatures	-40 °C ... 125 °C
Protection class acc. to UL 50	NEMA 4/12
Degree of protection acc. to IEC 60529	IP69K
Degree of protection acc. to IEC 60529	IP65 / IP68
Tightening torque (locking)	4 Nm
Material (hoods/housings)	aluminium die-cast, corrosion resistant
Surface (hoods/housings)	powder-coated
Colour (hoods/housings)	RAL 9005 (black)
Material (locking lever)	stainless steel
Material (seal)	NBR
Material (accessories)	metal

Specifications and approvals

GL

Details

09 99 000 0334 **Insertion / Removal tool for shielding clamps**
see chapter 90

Identification	Cable entry	Part number	Drawing Dimensions in mm
Han® HPR EasyCon, Hoods, screw locking 		09 40 024 0451	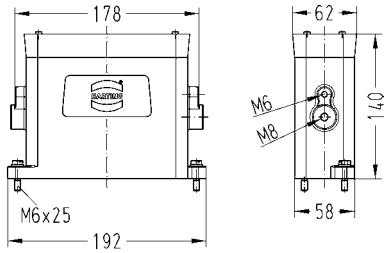 Tightening torque Cover locking 6 Nm Tightening torque external PE 15 Nm
Han® HPR EasyCon, Surface mounted housings, screw locking 		09 40 024 0951	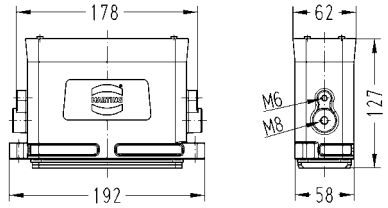 Tightening torque Cover locking 6 Nm Tightening torque external PE 15 Nm
Han® HPR EasyCon, Cover, top entry, screw locking, for surface mounted housings, for hoods 	3xM25 3xM32 4xM25	19 40 024 9901 19 40 024 9903 19 40 024 9902	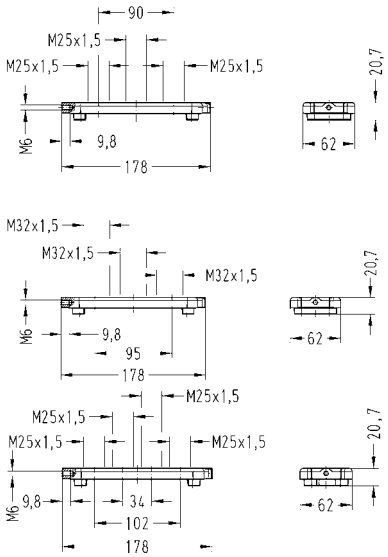

HC-Modular

Identification	Cable entry	Part number	Drawing Dimensions in mm
Frame, for male inserts, Han® HC Modular 350, 3 pins Range of delivery: 2 x distance bolt (SW 7), 4 x M4 screw, 4 x washer SK S4 		09 40 024 9911	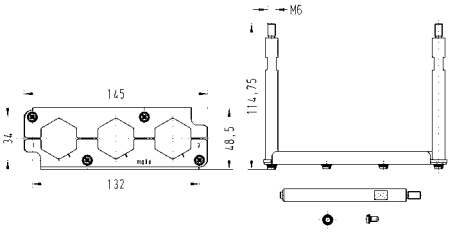 Tightening torque Distance bolt 6 Nm Tightening torque Fixing screws M4: 1.5 Nm
Frame, for female inserts, Han® HC Modular 350, 3 pins Range of delivery: 2 x distance bolt (SW 7), 4 x M4 screw, 4 x washer SK S4 		09 40 024 9912	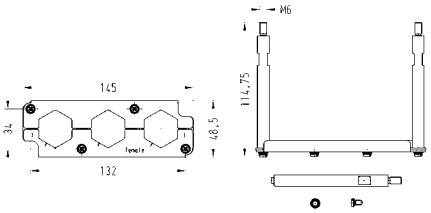 Tightening torque Distance bolt 6 Nm Tightening torque Fixing screws M4: 1.5 Nm
Frame, for male inserts, Han® HC Modular 350, 4 pins Range of delivery: 2 x distance bolt (SW 7), 4 x M4 screw, 4 x washer SK S4, 4 x heat shrink tube 		09 40 024 9913	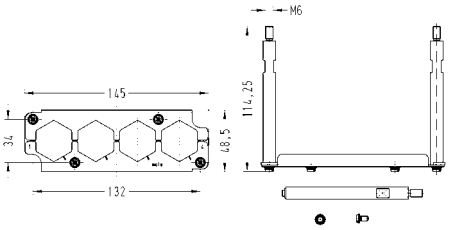 Tightening torque Distance bolt 6 Nm Tightening torque Fixing screws M4: 1.5 Nm
Frame, for female inserts, Han® HC Modular 350, 4 pins Range of delivery: 2 x distance bolt (SW 7), 4 x M4 screw, 4 x washer SK S4, 4 x heat shrink tube 		09 40 024 9914	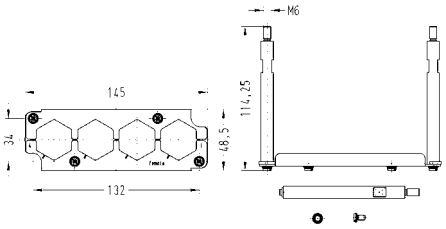 Tightening torque Distance bolt 6 Nm Tightening torque Fixing screws M4: 1.5 Nm

Identification	Cable entry	Part number	Drawing Dimensions in mm
Frame, for male inserts, Han® HC Modular 650, 3 pins Range of delivery: 2 x distance bolt (SW 7), 2 x M4 screw, 2 x washer SK S4, 2 x M4 countersunk screw 		09 40 024 9921	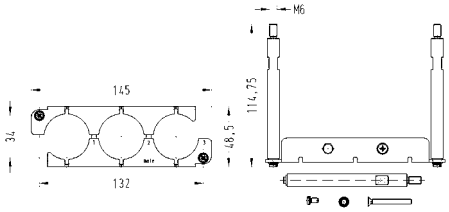 Tightening torque Distance bolt 6 Nm Tightening torque Fixing screws M4: 1.5 Nm Tightening torque Cross-tying screws M4: 1.5 Nm
Frame, for female inserts, Han® HC Modular 650, 3 pins Range of delivery: 2 x distance bolt (SW 7), 2 x M4 screw, 2 x washer SK S4, 2 x M4 countersunk screw 		09 40 024 9922	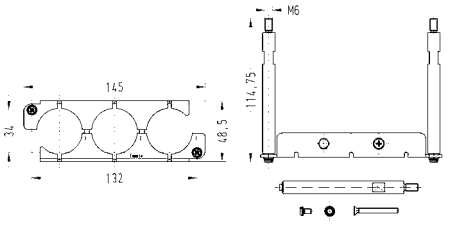 Tightening torque Distance bolt 6 Nm Tightening torque Fixing screws M4: 1.5 Nm Tightening torque Cross-tying screws M4: 1.5 Nm
Frame, long version Range of delivery: 6 x M6 screw, 6 x washer SK S6 		09 40 000 9925	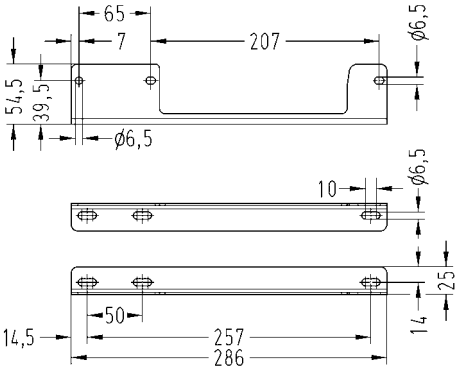 Tightening torque Fixing screws M6: 6 Nm
Frame, short version Range of delivery: 4 x M6 screw, 4 x washer SK S6 		09 40 000 9926	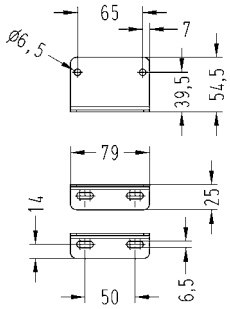 Tightening torque Fixing screws M6: 6 Nm

Identification	Part number	Drawing Dimensions in mm
Han® HPR, Bulkhead mounted housings, screw locking, enlarged	09 40 024 0368	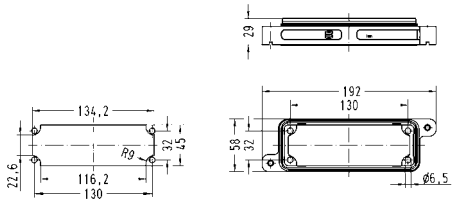
Han® HPR, Mounting frames	09 40 000 9955	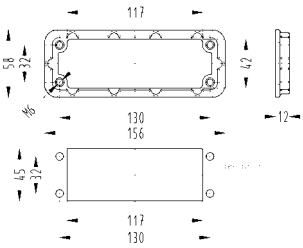
Frame, for male inserts, Han® HC Modular 350, 3 pins Range of delivery: 4 x M4 screw, 4 x washer SK S4, 4 x washer SK S6, 4 x cheese-head screw M6 x 20, 4 x cheese-head screw M6 x 25	09 11 000 9957	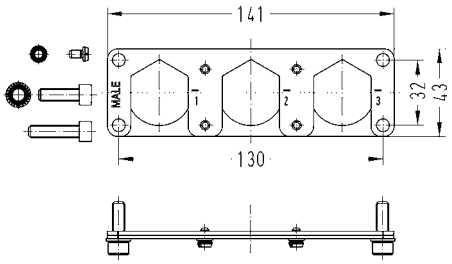 Tightening torque Fixing screws M6: 10 Nm Tightening torque Screws M4: 1.5 Nm
Frame, for female inserts, Han® HC Modular 350, 3 pins Range of delivery: 4 x M4 screw, 4 x washer SK S4, 4 x washer SK S6, 4 x cheese-head screw M6 x 20, 4 x cheese-head screw M6 x 25	09 11 000 9958	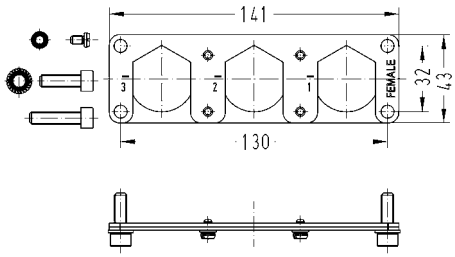 Tightening torque Fixing screws M6: 10 Nm Tightening torque Screws M4: 1.5 Nm

Identification	Part number	Drawing Dimensions in mm
Frame, for male inserts, Han® HC Modular 350, 4 pins Range of delivery: 4 x M4 screw, 4 x washer SK S4, 4 x washer SK S6, 4 x cheese-head screw M6 x 20, 4 x cheese-head screw M6 x 35, 4 x heat shrink tube 	09 11 000 9964	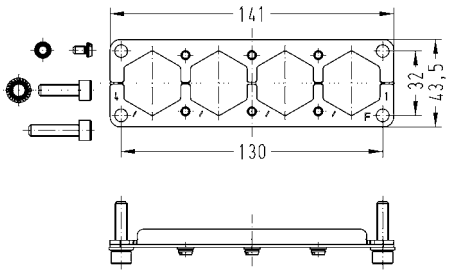 Tightening torque Fixing screws M6: 10 Nm Tightening torque Screws M4: 1.5 Nm
Frame, for female inserts, Han® HC Modular 350, 4 pins Range of delivery: 4 x M4 screw, 4 x washer SK S4, 4 x washer SK S6, 4 x cheese-head screw M6 x 20, 4 x cheese-head screw M6 x 35, 4 x heat shrink tube 	09 11 000 9965	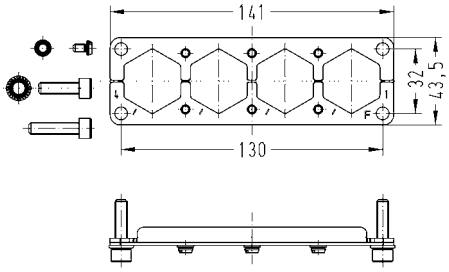 Tightening torque Fixing screws M6: 10 Nm Tightening torque Screws M4: 1.5 Nm
Frame, for male inserts, Han® HC Modular 650, 3 pins Range of delivery: 4 x M4 screw, 4 x washer SK S4, 4 x washer SK S6, 4 x cheese-head screw M6 x 20, 4 x cheese-head screw M6 x 35 	09 11 000 9973	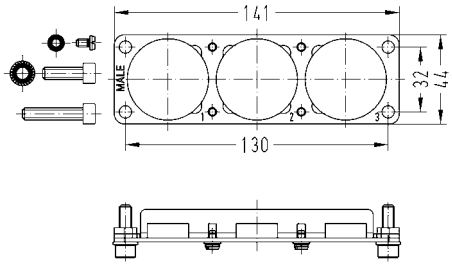 Tightening torque Fixing screws M6: 10 Nm Tightening torque Screws M4: 1.5 Nm
Frame, for female inserts, Han® HC Modular 650, 3 pins Range of delivery: 4 x M4 screw, 4 x washer SK S4, 4 x washer SK S6, 4 x cheese-head screw M6 x 20, 4 x cheese-head screw M6 x 35 	09 11 000 9974	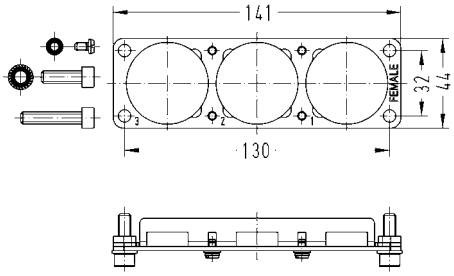 Tightening torque Fixing screws M6: 10 Nm Tightening torque Screws M4: 1.5 Nm

Features

- Secure and a visible connection of screening braid of shielded cables

Technical characteristics

Tightening torque	20 Nm 10 Nm
Material (screwing)	metal

Identification	Clamping range (mm)	Size	Part number	Drawing Dimensions in mm
Han® HPR EasyCon, EMC clamp, metal Tightening torque 20 Nm	13 ... 21 16 ... 28 17 ... 22.5	M32 M32 M32	19 00 000 5014 19 00 000 5022 19 00 000 5015	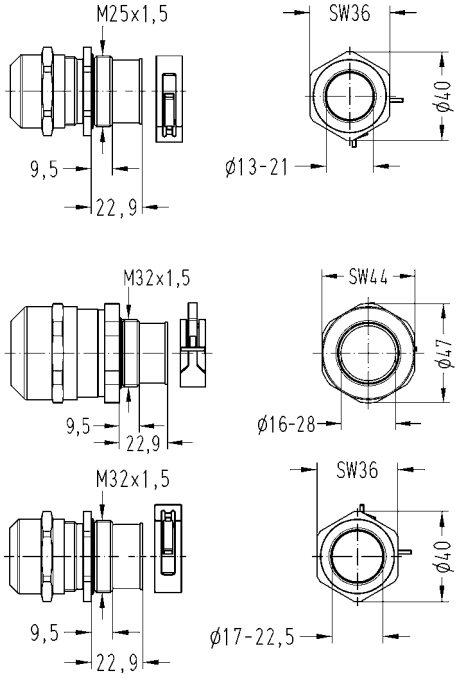
Han® HPR EasyCon, EMC clamp, metal Tightening torque 10 Nm	13 ... 21 9 ... 17	M25 M25	19 00 000 5019 19 00 000 5013	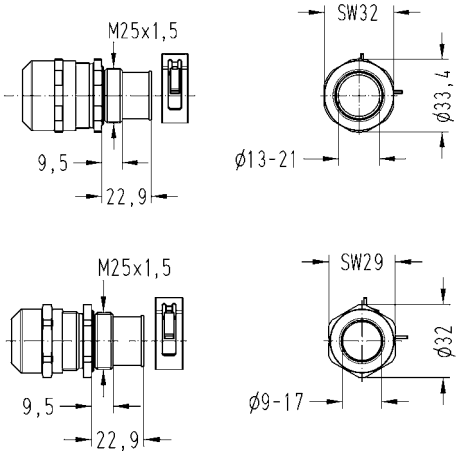

HC-Modular

Features

- Hoods/Housings for higher EMC requirements
- Ideal motor/drive connector for transportation sector
- Simple and quick assembly
- Secure termination, easy to control
- Vibration resistant acc. to IEC 61373 Category 1B (Category 2 possible with usage of M6 distance bolts)

Technical characteristics

Limiting temperatures	-40 °C ... 125 °C
Protection class acc. to UL 50	NEMA type 4/4X/12
Degree of protection acc. to IEC 60529	IP69K
Degree of protection acc. to IEC 60529	IP65 / IP68
Tightening torque (locking)	4 Nm
Corrosion resistance	ASTM B117-09 (500 h)
Material (hoods/housings)	aluminium die-cast, corrosion resistant
Surface (hoods/housings)	powder-coated
Colour (hoods/housings)	RAL 9005 (black)
Material (locking lever)	stainless steel
Material (seal)	NBR
Material (accessories)	metal

Specifications and approvals

GL

Identification	Cable entry	Part number	Drawing Dimensions in mm
Han® HPR, Hoods, screw locking 		09 40 048 0451	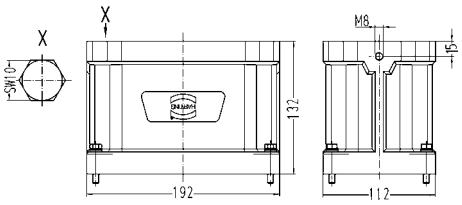
Han® HPR, Bulkhead mounted housings, screw locking 		09 40 048 0311	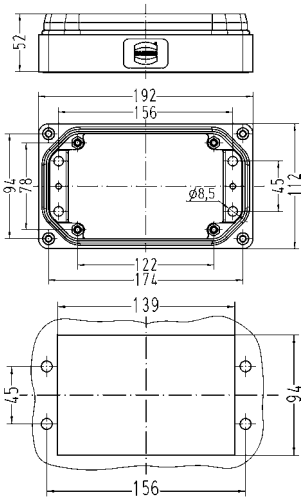 Panel cut out
Han® HPR, Bulkhead mounted housings, for 4 standard inserts - size 16B, screw locking 		09 40 048 0331	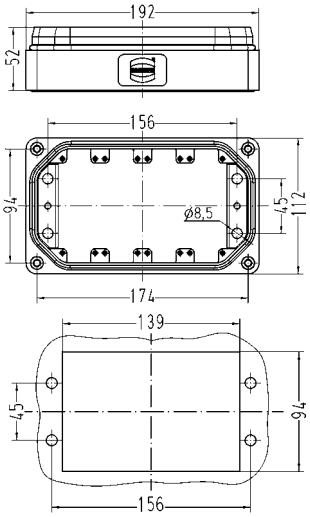 Panel cut out

Identification	Cable entry	Part number	Drawing Dimensions in mm
Han® HPR, Surface mounted housings, screw locking 		09 40 048 0951	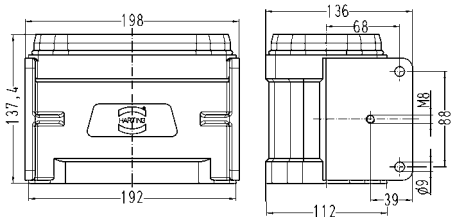
Han® HPR, Cover for housings, metal, screw locking 		09 40 048 5401	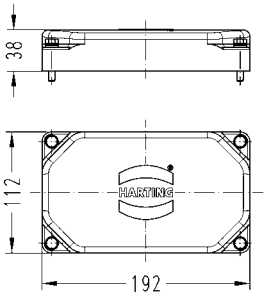
Han® HPR, Cover, Distance bolt M5, for female inserts Range of delivery: 4 distance pieces, 4 x M6 screw, 4 washers 	4xM40	19 40 048 9901	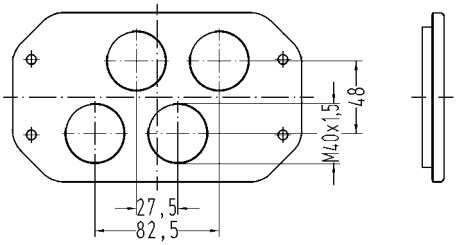
Han® HPR, Cover, Distance bolt M5, for male inserts Range of delivery: 4 distance pieces, 4 x M6 screw, 4 washers 	4xM40	19 40 048 9801	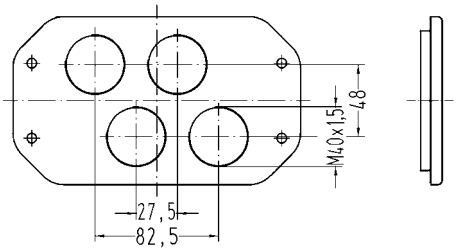

Identification	Cable entry	Part number	Drawing Dimensions in mm
Han® HPR, Cover, Distance bolt M6 Range of delivery: 4 distance pieces, 4 x M6 screw, 4 washers 	– 5xM32 6xM25 6xM32 10xM25	09 40 048 9801 19 40 048 9812 19 40 048 9820 19 40 048 9822 19 40 048 9860	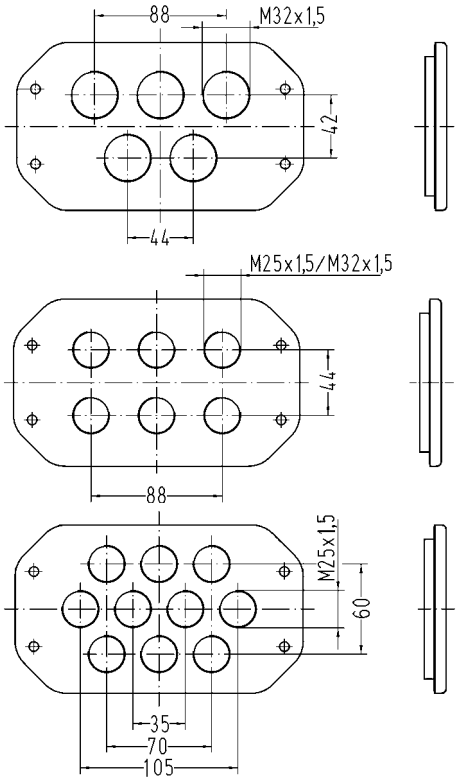
Han® HPR, Cover, Distance bolt M5 Range of delivery: 4 distance pieces, 4 x M6 screw, 4 washers 	–	09 40 048 9803	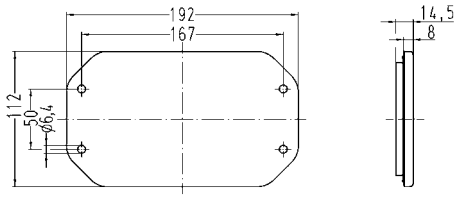 Basic size for above mentioned covers
Mounting frames, 48 HPR 		09 40 000 9965	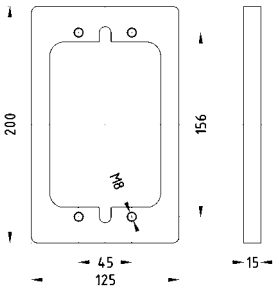

Identification	Part number male	Part number female	Drawing Dimensions in mm
Frame, for 4 inserts, size 16 B suitable for hoods and surface mounted hous-ingsin conjunction with cover 09 40 048 9803/19 40 048 9801/19 40 048 9901 only	09 40 048 9912	09 40 048 9912	
Frame, for 6 x HC 350 contacts 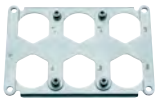	09 40 048 9806	09 40 048 9906	
Frame, for 4 x HC 350 contacts + PE 	09 40 048 9809	09 40 048 9909	
Frame, for 4 x HC 350 contacts + 2 x Han® Q 5/0 	09 40 048 9810	09 40 048 9910	
Frame, for 10 x HC 350 contacts 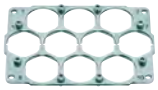	09 40 048 9860	09 40 048 9960	
Frame, for 4 x HC 650 contacts + 2 x Han® Q 5/0 	09 40 048 9811	09 40 048 9911	

Features

- Flexible high-current interface
- Low mating forces
- Stackable due to modular design
- Suitable for HC 350 crimp contacts
- On-board removal tool
- Up to 6 contacts in a row
- Stackable up to 3 level

Derating

Current carrying capacity

The current carrying capacity of the connectors is limited by the thermal load capability of the contact element material including the connections and the insulating parts. The derating curve is therefore valid for currents which flow constantly (non-intermittent) through each contact element of the connector evenly, without exceeding the allowed maximum temperature.

Measuring and testing techniques acc. to IEC 60512-5-2

HC Individual, 3 poles

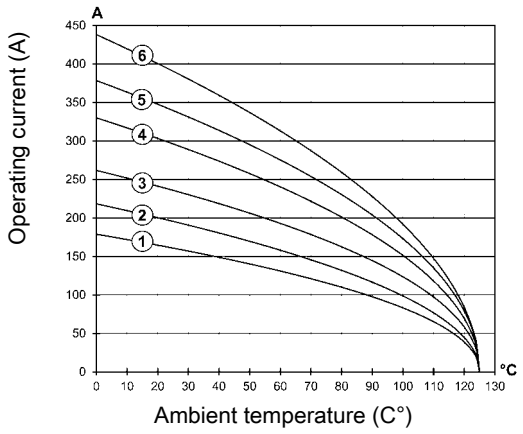

① Wire cross section 25 mm²
② Wire cross section 35 mm²
③ Wire cross section 50 mm²
④ Wire cross section 70 mm²
⑤ Wire cross section 95 mm²
⑥ Wire cross section 120 mm²

Technical characteristics

Electrical data acc. to IEC 61984	**350 A 2000 V 18 kV 3**
Rated current	350 A
Rated voltage	2000 V
Rated impulse voltage	18 kV
Pollution degree	3
alternative electrical data	**350 A 4000 V 18 kV 2**
Insulation resistance	≥10^{10} Ohm
Limiting temperatures	-40 °C ... 125 °C
Flammability (insert) acc. to UL 94	V 0
Mating cycles	≥500
Flammability acc. to NFF 16 101 / 16 102	I2 / F3
Flammability acc. to EN 45 545-2:2013	HL 2 / R23 outside, HL1 / R22 inside
Degree of protection acc. to IEC 60529	IP66 (IP68 in preparation)
Vibration resistance	acc. to DIN EN 60086-2-6
Shock immunity	acc. to DIN EN 61373
Material (insert)	polyamide
Colour (insert)	black
Material (contact)	copper alloy

Specifications and approvals

IEC 60664-1
IEC 61984

Details

Crimping tools see chapter 90

Remarks on the crimp technique

The wire gauges mentioned in the catalogue refer to geometric wire gauges of cables.

2000 V
350 A

Identification	Size	Wire cross section (mm²)	Part number male	Part number female	Drawing Dimensions in mm
Han® HC Individual, Crimp terminal, Carrier module	M32		19 11 001 3032	19 11 001 3132	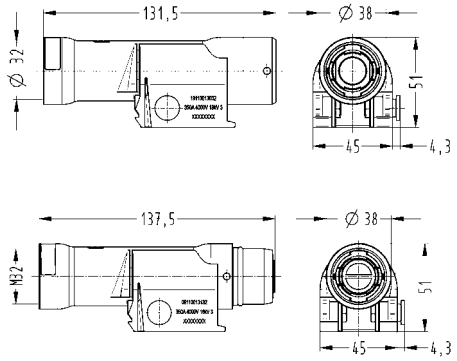
Crimp contact, TC 350, silver plated contacts, contact resistance ≤0.3 mOhm		25 35 50 70 95 120	09 11 000 6139 09 11 000 6140 09 11 000 6141 09 11 000 6142 09 11 000 6143 09 11 000 6144	09 11 000 6239 09 11 000 6240 09 11 000 6241 09 11 000 6242 09 11 000 6243 09 11 000 6244	

Wire gauge	Ø	Stripping length
25 mm²	7	26 mm
35 mm²	8.2	26 mm
50 mm²	10	28 mm
70 mm²	11.5	28 mm
95 mm²	13.5	30 mm
120 mm²	15.5	24 mm

for stranded wire according to IEC 60 228 Class 5
Crimp zone acc. to DIN 46235

Identification	Part number	Drawing Dimensions in mm
Coding element Range of delivery: set with 2 pieces	09 11 000 9987	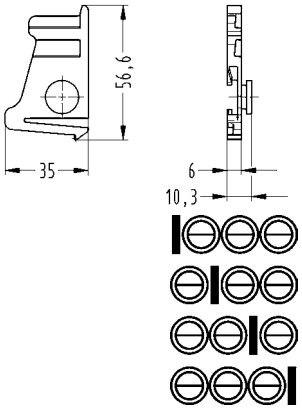 coding options with 1 coding element (3-poles set) Other coding possibilities on request
Han® HC Individual, Removal tool	09 99 000 0826	
Han® HC Individual, Set to create levels Range of delivery: 2 x M6 x 20 socket screw, 2 x washer SK Z6	09 11 000 9989	
Han® HC Individual, Carrier plate, aluminium, for 3x 350 A carrier modules	09 11 000 9991	

Identification	Part number	Drawing Dimensions in mm
Han® HC Individual, Locking module, active, aluminium, stainless steel locking	09 11 000 9980	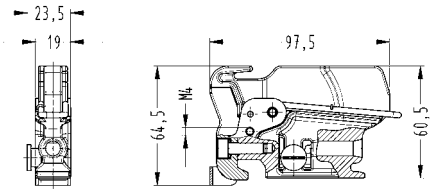
Han® HC Individual, Locking module, passive, aluminium, stainless steel locking	09 11 000 9982	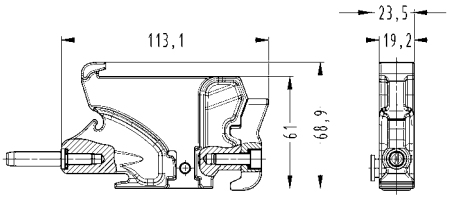
Identification carrier module, 1 - 10 A	09 11 000 9996	
Identification carrier module, 1 - 10 B	09 11 000 9997	
Identification carrier module, 1 - 10 C	09 11 000 9998	
Identification carrier module, without description	09 11 000 9999	

Derating

Current carrying capacity

The current carrying capacity of the connectors is limited by the thermal load capability of the contact element material including the connections and the insulating parts. The derating curve is therefore valid for currents which flow constantly (non-intermittent) through each contact element of the connector evenly, without exceeding the allowed maximum temperature.

Measuring and testing techniques acc. to IEC 60512-5-2

HC Individual, 3 poles

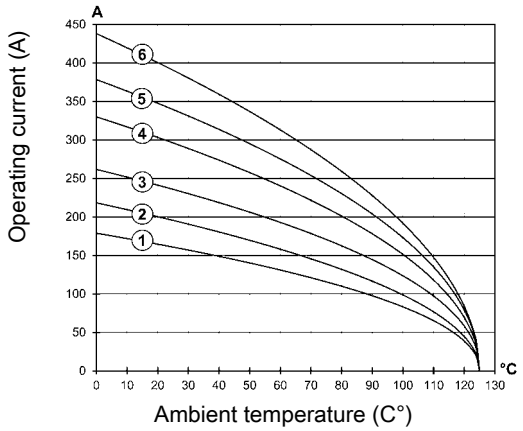

① Wire cross section 25 mm²
② Wire cross section 35 mm²
③ Wire cross section 50 mm²
④ Wire cross section 70 mm²
⑤ Wire cross section 95 mm²
⑥ Wire cross section 120 mm²

Technical characteristics

Electrical data acc. to IEC 61984	**350 A 2000 V 18 kV 3**
Rated current	350 A
Rated voltage	2000 V
Rated impulse voltage	18 kV
Pollution degree	3
alternative electrical data	**350 A 4000 V 18 kV 2**
Insulation resistance	≥10^{10} Ohm
Limiting temperatures	-40 °C ... 125 °C
Flammability (insert) acc. to UL 94	V 0
Mating cycles	≥500
Flammability acc. to NFF 16 101 / 16 102	I2 / F3
Flammability acc. to EN 45 545-2:2013	HL 2 / R23 outside, HL1 / R22 inside
Degree of protection acc. to IEC 60529	IP66 (IP68 in preparation)
Vibration resistance	acc. to DIN EN 60086-2-6
Shock immunity	acc. to DIN EN 61373
Material (insert)	polyamide
Colour (insert)	black

Specifications and approvals

IEC 60664-1
IEC 61984

2000 V
350 A

Identification	Size	Part number male	Part number female	Drawing Dimensions in mm
Han® HC Individual, Crimp terminal, Set, 3-poles Range of delivery: 3 x carrier module, 1 x carrier plate, 2 x locking module, passive Please order separately: coding elements, unlocking tool, cable gland, crimp contacts and set to create levels	M32	09 11 003 3032		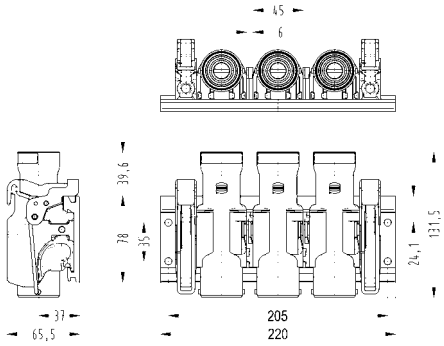
Han® HC Individual, Crimp terminal, Set, 3-poles Range of delivery: 3 x carrier module, 1 x carrier plate, 2 x locking module, active Please order separately: coding elements, unlocking tool, cable gland, crimp contacts and set to create levels	M32		09 11 003 3132	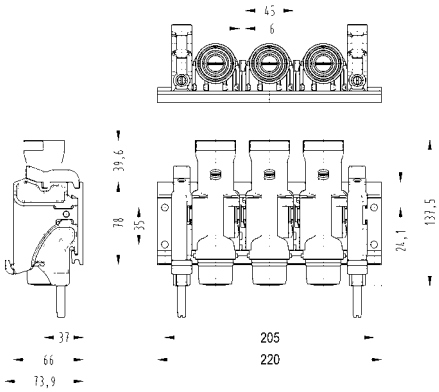

Innovative High Current Connectors for Power Transmission on Trains

Photo courtesy: Stadtwerke München, Munich

The Split hood and housing “open system” of the Han® 24HPR EasyCon with the innovative concept for shielded cables is an excellent solution for the versatile power requirements and the rapid moving operational cycle on Trains.
In use are the approved Han® HC Modular 350A and 650A Crimp-Contacts.

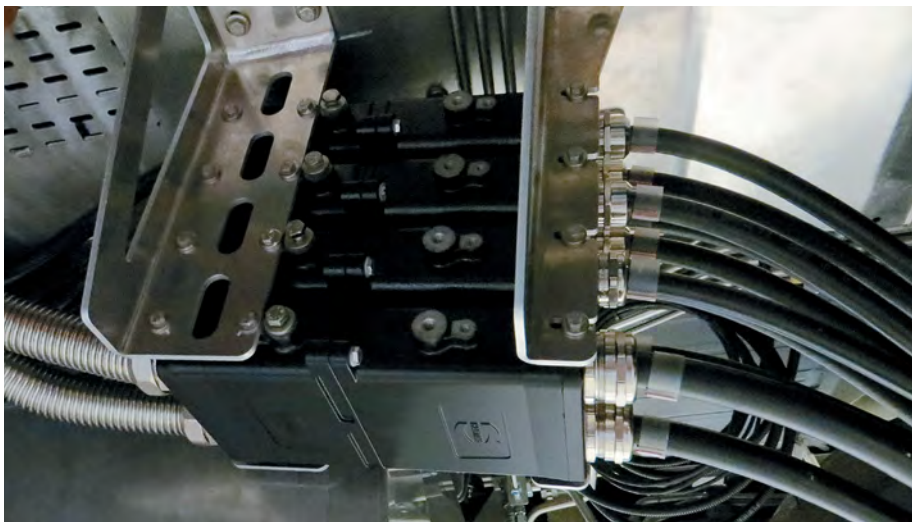

Contents | Page

Han-Power® S with 1x Han® Q 4/2	**15.2**
Han-Power® S with 2x Han® Q 4/2	**15.4**
Han-Power® S with 1x Han® Q 4/2 with maintenance switch	**15.6**
Han-Power® S with 1x Han® Q 4/2 and on/off Switch	**15.8**
Han-Power® S with 1x Han® Q 4/2, metal	**15.10**
Han-Power® S with 1x Han® Q 8/0	**15.12**
Han-Power® S with 2x Han® Q 8/0	**15.14**
Han-Power® T with 3x Han® Q 2/0	**15.16**
Han-Power® T with 3x Han® Q 5/0	**15.18**
Han-Power® T with 3x Han® Q 4/2	**15.20**
Han-Power® T with 3x Han-Modular® Twin	**15.22**
Accessories	**15.24**

Features

- Compact design saves space
- No interruption of the energy supply
- Leading protective ground contact within the insert
- Assembly with standard tools
- Black plastic hood, top entry
- Cable to cable hood with male insert and hood with female insert
- Cable (5x 4 mm²) pre-assembled on both sides

Derating

Current carrying capacity

The current carrying capacity of the connectors is limited by the thermal load capability of the contact element material including the connections and the insulating parts. The derating curve is therefore valid for currents which flow constantly (non-intermittent) through each contact element of the connector evenly, without exceeding the allowed maximum temperature.

Measuring and testing techniques acc. to IEC 60512-5-2

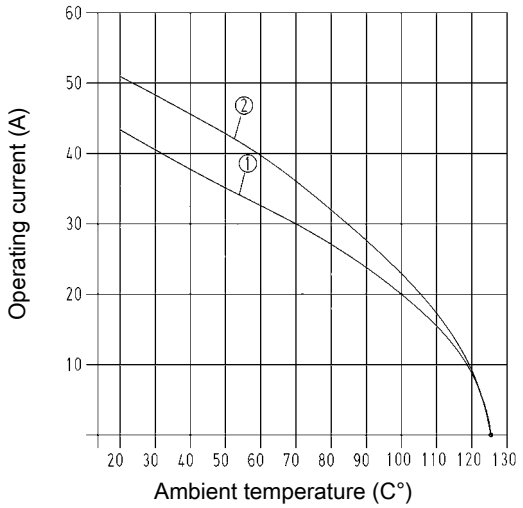

① Han® Q 4/2 Wire cross section 4 mm²
② Han® Q 4/2 Wire cross section 6 mm²

Technical characteristics

Contacts	4/2
Electrical data acc. to IEC 61984	**40 A 400/690 V 6 kV 3**
Rated current	40 A
Rated voltage conductor - ground	400 V
Rated voltage conductor - conductor	690 V
Rated impulse voltage	6 kV
Pollution degree	3
Electrical data, signal	**10 A 250 V 4 kV 3**
Rated current	10 A
Rated voltage	250 V
Rated impulse voltage	4 kV
Rated voltage acc. to UL	600 V
Rated voltage acc. to UL, signal	250 V
Insulation resistance	≥10^{10} kOhm
Limiting temperatures	-40 °C ... 125 °C
Flammability (hoods/housings) acc. to UL 94	V 0
Mating cycles	≥500
Degree of protection acc. to IEC 60529	IP65
Material (hoods/housings)	polycarbonate
Colour (hoods/housings)	RAL 9005 (black)
Material (locking lever)	polyamide
Material (seal)	NBR
Material (contact)	copper alloy

Specifications and approvals

IEC 61984
IEC 60664-1
DIN VDE 0281
IEC 60228

Details

The Han-Power® S connector is suitable for the assembly of serial power bus.

Having assembled the energy supply Han-Power® S can be inserted at any place of the power cable.The cable jacket has to be removed, the conductor is placed without interruption in the IDC.

Han-Power® S is suitable for cables with single strands manufactured acc. to DIN VDE 0281/ DIN EN 60 228. For the distribution of the device Han-Compact® hoods or cable to cable housings are used.

This power supply has to be realized with one Han-Compact® cable to cable hood.

Han-Power® S with 1x Han® Q 4/2

Number of contacts

4/2+ ⏚

400/690 V / 250 V
40 A/10 A

Identification	Wire cross section (mm²)	Cable length	Part number	Drawing Dimensions in mm
Han-Power® S, with 1x Han® Q 4/2, moulded Han-Compact® Hoods, IDC Insulation displacement terminal, contact resistance ≤0.3 mOhm 	2.5 – 4 4 – 6		09 12 008 4804 09 12 008 4806	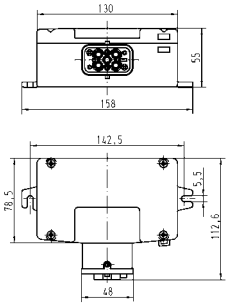
System cable	4 4 4 4 4 4	1.5 m 3 m 5 m 10 m 15 m 30 m	20 88 641 1015 20 88 641 1030 20 88 641 1050 20 88 641 1100 20 88 641 1150 20 88 641 1300	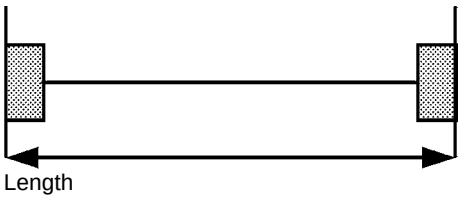

Features

- Compact design saves space
- No interruption of the energy supply
- Leading protective ground contact within the insert
- Assembly with standard tools
- Black plastic hood, top entry
- Cable to cable hood with male insert and hood with female insert
- Cable (5x 4 mm²) pre-assembled on both sides

Derating

Current carrying capacity

The current carrying capacity of the connectors is limited by the thermal load capability of the contact element material including the connections and the insulating parts. The derating curve is therefore valid for currents which flow constantly (non-intermittent) through each contact element of the connector evenly, without exceeding the allowed maximum temperature.

Measuring and testing techniques acc. to IEC 60512-5-2

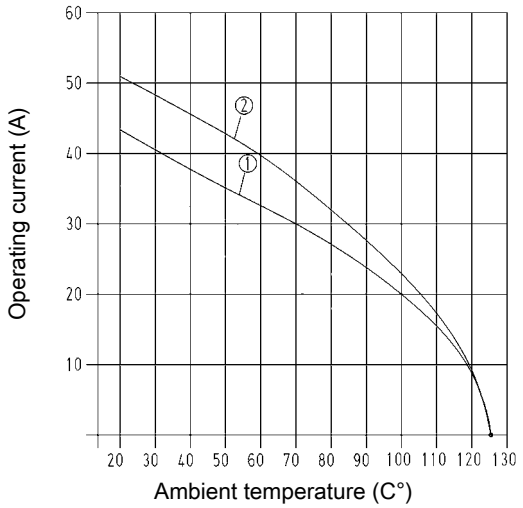

① Han® Q 4/2 Wire cross section 4 mm²
② Han® Q 4/2 Wire cross section 6 mm²

Technical characteristics

Contacts	4/2
Electrical data acc. to IEC 61984	**40 A 400/690 V 6 kV 3**
Rated current	40 A
Rated voltage conductor - ground	400 V
Rated voltage conductor - conductor	690 V
Rated impulse voltage	6 kV
Pollution degree	3
Electrical data, signal	**10 A 250 V 4 kV 3**
Rated current	10 A
Rated voltage	250 V
Rated impulse voltage	4 kV
Rated voltage acc. to UL	600 V
Rated voltage acc. to UL, signal	250 V
Insulation resistance	≥10^{10} kOhm
Limiting temperatures	-40 °C ... 125 °C
Flammability (hoods/housings) acc. to UL 94	V 0
Mating cycles	≥500
Degree of protection acc. to IEC 60529	IP65
Material (hoods/housings)	polycarbonate
Colour (hoods/housings)	RAL 9005 (black)
Material (locking lever)	polyamide
Material (seal)	NBR
Material (contact)	copper alloy

Specifications and approvals

IEC 61984
IEC 60664-1
DIN VDE 0281
IEC 60228

Details

The Han-Power® S connector is suitable for the assembly of serial power bus.

Having assembled the energy supply Han-Power® S can be inserted at any place of the power cable.The cable jacket has to be removed, the conductor is placed without interruption in the IDC.

Han-Power® S is suitable for cables with single strands manufactured acc. to DIN VDE 0281/ DIN EN 60 228. For the distribution of the device Han-Compact® hoods or cable to cable housings are used.

This power supply has to be realized with one Han-Compact® cable to cable hood.

Han-Power® S with 2x Han® Q 4/2

Number of contacts

4/2+ ⏚

400/690 V / 250 V
40 A/10 A

Identification	Wire cross section (mm²)	Cable length	Part number	Drawing Dimensions in mm
Han-Power® S, with 2x Han® Q 4/2, Han-Compact® Housings, bulk-head mounting, IDC Insulation displacement terminal, contact resistance ≤0.3 mOhm 	4 – 6		09 12 008 4807	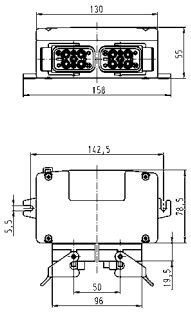
System cable	4 4 4 4 4 4	1.5 m 3 m 5 m 10 m 15 m 30 m	20 88 641 1015 20 88 641 1030 20 88 641 1050 20 88 641 1100 20 88 641 1150 20 88 641 1300	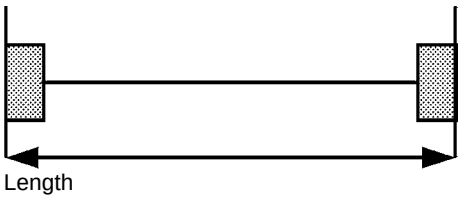

Features

- Compact design saves space
- No interruption of the energy supply
- Leading protective ground contact within the insert
- Assembly with standard tools

Derating

Current carrying capacity

The current carrying capacity of the connectors is limited by the thermal load capability of the contact element material including the connections and the insulating parts. The derating curve is therefore valid for currents which flow constantly (non-intermittent) through each contact element of the connector evenly, without exceeding the allowed maximum temperature.

Measuring and testing techniques acc. to IEC 60512-5-2

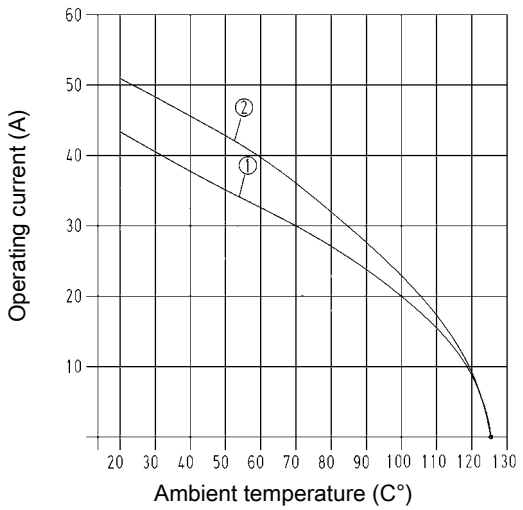

① Han® Q 4/2 Wire cross section 4 mm²
② Han® Q 4/2 Wire cross section 6 mm²

Technical characteristics

Contacts	4/2
Electrical data acc. to IEC 61984	**5 A 230/400 V 4 kV 2**
Rated current	5 A
Rated voltage conductor - ground	230 V
Rated voltage conductor - conductor	400 V
Rated impulse voltage	4 kV
Pollution degree	2
Electrical data, signal	**10 A 250 V 4 kV 2**
Rated current	10 A
Rated voltage	250 V
Rated impulse voltage	4 kV
Rated voltage acc. to UL	600 V
Rated voltage acc. to CSA	250 V
Insulation resistance	≥10^{10} kOhm
Limiting temperatures	-25 °C ... 55 °C
Flammability (hoods/housings) acc. to UL 94	V 0
Mating cycles	≥500
Degree of protection acc. to IEC 60529	IP65
Material (hoods/housings)	polycarbonate
Colour (hoods/housings)	RAL 9005 (black)
Material (seal)	NBR
Material (contact)	copper alloy

Specifications and approvals

IEC 61984
IEC 60664-1

Details

The Han-Power® S connector is suitable for the assembly of serial power bus.

Having assembled the energy supply Han-Power® S can be inserted at any place of the power cable.The cable jacket has to be removed, the conductor is placed without interruption in the IDC.

Han-Power® S is suitable for cables with single strands manufactured acc. to DIN VDE 0281/ DIN EN 60 228. For the distribution of the device Han-Compact® hoods or cable to cable housings are used.

This power supply has to be realized with one Han-Compact® cable to cable hood.

Cables

Design of conductor acc. to DIN VDE 0281 / DIN EN 60 228

Wire gauge 4 mm²

- Number of single strands 56 x 0.3 mm ∅
- Outer diameter 4.2 mm

Wire gauge 6 mm²

- Number of single strands 84 x 0.3 mm ∅
- Outer diameter 4.8 mm

Technical data of switches

Electrical data acc. to IEC/EN 61058-1 (VDE 0630 sect. 1)

for switch-disconnectors

Rated voltage 250 V~ / 400 V~

Rated current 16 (10) A / 10 (5) A

Han-Power® S with 1x Han® Q 4/2 with maintenance switch

Number of contacts

4/2+ ⏚

230/400 V / 250 V
5 A/10 A

Identification	Wire cross section (mm²)	Part number	Drawing Dimensions in mm
Han-Power® S, with 1x Han® Q 4/2, with maintenance switch, IDC Insulation displacement terminal 	4 – 6	09 12 008 4620	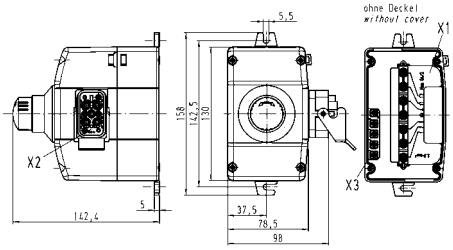

Han-Power

Features

- Compact design saves space
- No interruption of the energy supply
- Leading protective ground contact within the insert
- Assembly with standard tools

Derating

Current carrying capacity

The current carrying capacity of the connectors is limited by the thermal load capability of the contact element material including the connections and the insulating parts. The derating curve is therefore valid for currents which flow constantly (non-intermittent) through each contact element of the connector evenly, without exceeding the allowed maximum temperature.

Measuring and testing techniques acc. to IEC 60512-5-2

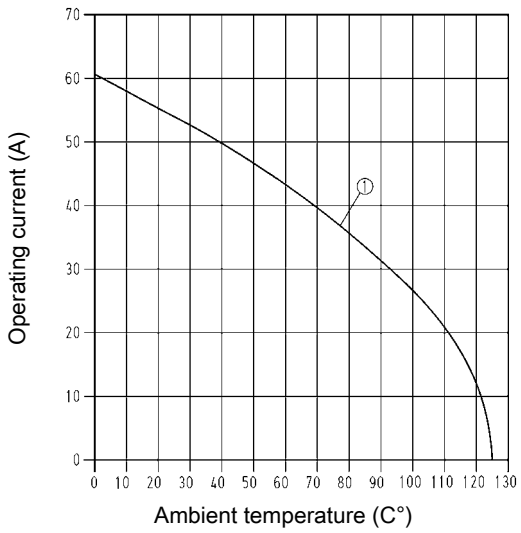

Energy supply Wire cross section 10 mm²

Technical characteristics

Contacts	4/2
Electrical data acc. to IEC 61984	**10 A 230/400 4 kV 3**
Rated current	10 A
Rated voltage conductor - ground	230
Rated voltage conductor - conductor	400
Rated impulse voltage	4 kV
Pollution degree	3
Insulation resistance	≥10^{10} kOhm
Limiting temperatures	-40 °C ... 125 °C
Flammability (hoods/housings) acc. to UL 94	V 0
Mating cycles	≥500
Degree of protection acc. to IEC 60529	IP65
Material (hoods/housings)	polycarbonate
Colour (hoods/housings)	RAL 9005 (black)
Material (seal)	NBR
Material (contact)	copper alloy

Specifications and approvals

IEC 61984
IEC 60664-1

Details

The Han-Power® S connector is suitable for the assembly of serial power bus.

Having assembled the energy supply Han-Power® S can be inserted at any place of the power cable.The cable jacket has to be removed, the conductor is placed without interruption in the IDC.

Han-Power® S is suitable for cables with single strands manufactured acc. to DIN VDE 0281/ DIN EN 60 228. For the distribution of the device Han-Compact® hoods or cable to cable housings are used.

This power supply has to be realized with one Han-Compact® cable to cable hood.

Power side

Electrical data

acc. to EN 61 984

Interface to connector

10 A 230/400 V 4 kV 3

Rated current 10 A

Rated voltage conductor - ground 230 V

Rated voltage conductor - conductor 400 V

Rated impulse voltage 4 kV

Rated short-circuit current 0.5 kA

Pollution degree 3

Frequency 50 Hz

Energy bus

50 A 230/400 V 4 kV 3

Max. operating temperature -5°C … 60°C

Degree of protection

acc. to DIN EN 60 529 IP 65

Mechanical working life ≥ 500 mating cycles

Security fixing

nach IEC 60 127-1;

nach UL 4248-1 / UL 512

nach CSA C22.2 no. 39

Rated currentIna 10 A

Rated voltageUn 250 V

Technical data of switches

Electrical data

acc. to IEC/EN 60 947 16 A 750 V 0.5 kA

Rated currentIna 16 A

Rated voltageUn 750 V

Rated short-circuit currentIcc 0.5 kA

Mechanical working life 10 000 operations

Han-Power® S with 1x Han® Q 4/2 and on/off Switch

Number of contacts

4/2+ ⏚

230/400
10 A

Identification	Wire cross section (mm²)	Part number	Drawing Dimensions in mm
Han-Power® S, with LED Display and on/off Switch, IDC Insulation displacement terminal 	10	09 12 008 4650	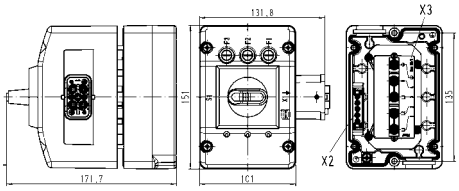 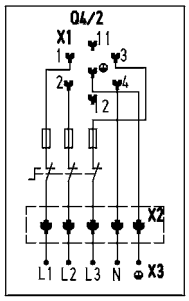 Wiring diagram

Han-Power

Features

- Compact design saves space
- No interruption of the energy supply
- Leading protective ground contact within the insert
- Assembly with standard tools

Derating

Current carrying capacity

The current carrying capacity of the connectors is limited by the thermal load capability of the contact element material including the connections and the insulating parts. The derating curve is therefore valid for currents which flow constantly (non-intermittent) through each contact element of the connector evenly, without exceeding the allowed maximum temperature.

Measuring and testing techniques acc. to IEC 60512-5-2

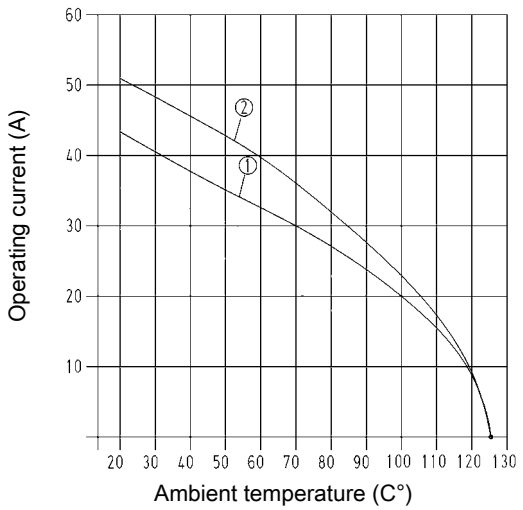

① Han® Q 4/2 Wire cross section 4 mm²
② Han® Q 4/2 Wire cross section 6 mm²

Technical characteristics

Contacts	4/2
Electrical data acc. to IEC 61984	**40 A 400/690 V 6 kV 3**
Rated current	40 A
Rated voltage conductor - ground	400 V
Rated voltage conductor - conductor	690 V
Rated impulse voltage	6 kV
Pollution degree	3
Electrical data, signal	**10 A 250 V 4 kV 3**
Rated current	10 A
Rated voltage	250 V
Rated impulse voltage	4 kV
Rated voltage acc. to UL	600 V
Rated voltage acc. to UL, signal	250 V
Rated voltage acc. to CSA	250 V
Insulation resistance	≥10^{10} kOhm
Limiting temperatures	-40 °C ... 125 °C
Flammability (hoods/housings) acc. to UL 94	V 0
Mating cycles	≥500
Degree of protection acc. to IEC 60529	IP65
Material (hoods/housings)	aluminium
Surface (hoods/housings)	powder-coated
Colour (hoods/housings)	RAL 9005 (black)
Material (seal)	NBR
Material (contact)	copper alloy

Specifications and approvals

IEC 61984
IEC 60664-1

Details

The Han-Power® S connector is suitable for the assembly of serial power bus.

Having assembled the energy supply Han-Power® S can be inserted at any place of the power cable.The cable jacket has to be removed, the conductor is placed without interruption in the IDC.

Han-Power® S is suitable for cables with single strands manufactured acc. to DIN VDE 0281/ DIN EN 60 228. For the distribution of the device Han-Compact® hoods or cable to cable housings are used.

This power supply has to be realized with one Han-Compact® cable to cable hood.

Han-Power® S with 1x Han® Q 4/2, metal

Number of contacts

4/2+ ⏚

400/690 V / 250 V
40 A/10 A

Identification	Wire cross section (mm²)	Part number	Drawing Dimensions in mm
Han-Power® S, with 1x Han® Q 4/2, Han-Compact® Housings, bulkhead mounting, IDC Insulation displacement terminal, contact resistance ≤0.3 mOhm 	4 – 6 10	09 12 008 4901 09 12 008 4951	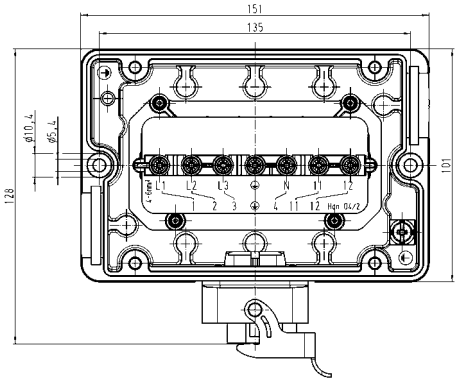 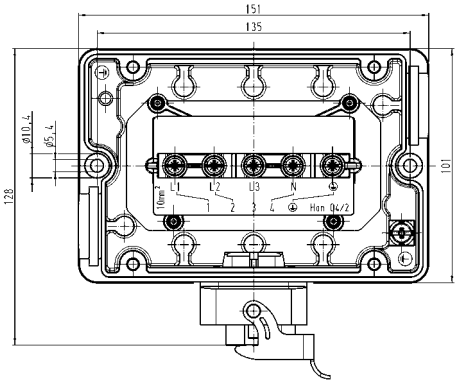

Features

- Compact design saves space
- No interruption of the energy supply
- Leading protective ground contact within the insert
- Assembly with standard tools
- Black plastic hood, top entry
- Cable to cable hood with male insert and hood with female insert
- Cable (7x 2.5 mm²) pre-assembled on both sides

Derating

Current carrying capacity

The current carrying capacity of the connectors is limited by the thermal load capability of the contact element material including the connections and the insulating parts. The derating curve is therefore valid for currents which flow constantly (non-intermittent) through each contact element of the connector evenly, without exceeding the allowed maximum temperature.

Measuring and testing techniques acc. to IEC 60512-5-2

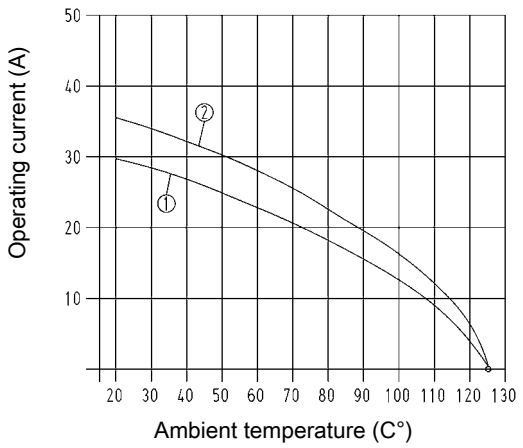

① Han® Q 8/0 Wire cross section 2.5 mm²
② Han® Q 8/0 Wire cross section 4 mm²
③ Han® Q 8/0 Wire cross section 6 mm²

Technical characteristics

Contacts	8
Electrical data acc. to IEC 61984	**25 A 500 V 6 kV 3**
Rated current	25 A
Rated voltage	500 V
Rated impulse voltage	6 kV
Pollution degree	3
Rated voltage acc. to UL	600 V
Rated voltage acc. to CSA	600 V
Insulation resistance	≥10^{10} kOhm
Limiting temperatures	-40 °C ... 125 °C
Operating temperature, unmoved	40 °C ... 80 °C
Operating temperature, moved	-15 °C ... 80 °C
Flammability (hoods/housings) acc. to UL 94	V 0
Mating cycles	≥500
Degree of protection acc. to IEC 60529	IP65, IP65 / IP67
Material (hoods/housings)	polycarbonate
Colour (hoods/housings)	RAL 9005 (black)
Material (locking lever)	polyamide, fibre-glass reinforced
Material (seal)	NBR
Material (contact)	copper alloy

Specifications and approvals

IEC 61984
IEC 60664-1
DIN VDE 0281
IEC 60228

Details

The Han-Power® S connector is suitable for the assembly of serial power bus.

Having assembled the energy supply Han-Power® S can be inserted at any place of the power cable.The cable jacket has to be removed, the conductor is placed without interruption in the IDC.

Han-Power® S is suitable for cables with single strands manufactured acc. to DIN VDE 0281/ DIN EN 60 228. For the distribution of the device Han-Compact® hoods or cable to cable housings are used.

This power supply has to be realized with one Han-Compact® cable to cable hood.

Han-Power® S with 1x Han® Q 8/0

Number of contacts

8+ ⏚

500 V
25 A

Identification	Wire cross section (mm²)	Cable length	Part number	Drawing Dimensions in mm
Han-Power® S, with 1x Han® Q 8/0, moulded Han-Compact® Hoods, IDC Insulation displacement terminal, contact resistance ≤1 mOhm 	2.5 – 4 4 – 6		09 12 008 4801 09 12 008 4811	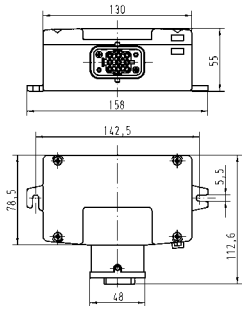
System cable	2.5 2.5 2.5 2.5 2.5 2.5	1.5 m 3 m 5 m 10 m 15 m 30 m	20 88 841 0015 20 88 841 0030 20 88 841 0050 20 88 841 0100 20 88 841 0150 20 88 841 0300	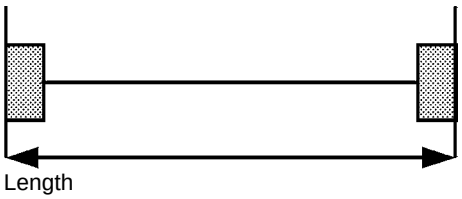

Features

- Compact design saves space
- No interruption of the energy supply
- Leading protective ground contact within the insert
- Assembly with standard tools
- Black plastic hood, top entry
- Hood on both sides
- Cable (7x 2.5 mm²) pre-assembled on both sides

Derating

Current carrying capacity

The current carrying capacity of the connectors is limited by the thermal load capability of the contact element material including the connections and the insulating parts. The derating curve is therefore valid for currents which flow constantly (non-intermittent) through each contact element of the connector evenly, without exceeding the allowed maximum temperature.

Measuring and testing techniques acc. to IEC 60512-5-2

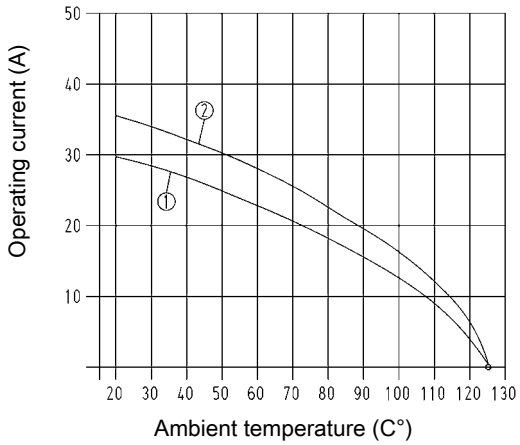

① Han® Q 8/0 Wire cross section 2.5 mm²
② Han® Q 8/0 Wire cross section 4 mm²

Technical characteristics

Contacts	6
Electrical data acc. to IEC 61984	**25 A 500 V 6 kV 3**
Rated current	25 A
Rated voltage	500 V
Rated impulse voltage	6 kV
Pollution degree	3
Rated voltage acc. to UL	600 V
Insulation resistance	≥10^{10} kOhm
Limiting temperatures	-40 °C ... 125 °C
Operating temperature, unmoved	40 °C ... 80 °C
Operating temperature, moved	-15 °C ... 80 °C
Flammability (hoods/housings) acc. to UL 94	V 0
Mating cycles	≥500
Degree of protection acc. to IEC 60529	IP65, IP65 / IP67
Material (hoods/housings)	polycarbonate
Colour (hoods/housings)	RAL 9005 (black)
Material (locking lever)	polyamide
Material (seal)	NBR
Material (contact)	copper alloy

Specifications and approvals

IEC 61984
IEC 60664-1
DIN VDE 0281
IEC 60228

Details

The Han-Power® S connector is suitable for the assembly of serial power bus.

Having assembled the energy supply Han-Power® S can be inserted at any place of the power cable.The cable jacket has to be removed, the conductor is placed without interruption in the IDC.

Han-Power® S is suitable for cables with single strands manufactured acc. to DIN VDE 0281/ DIN EN 60 228. For the distribution of the device Han-Compact® hoods or cable to cable housings are used.

This power supply has to be realized with one Han-Compact® cable to cable hood.

Han-Power® S with 2x Han® Q 8/0

Number of contacts

6+ ⏚

500 V
25 A

Identification	Wire cross section (mm²)	Cable length	Part number	Drawing Dimensions in mm
Han-Power® S, with 2x Han® Q 8/0, Han-Compact® Housings, bulk-head mounting, IDC Insulation displacement terminal, Bulkhead mounted housings, contact resistance ≤1 mOhm 	2.5 – 4		09 12 008 4802	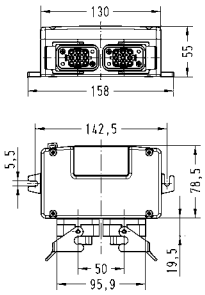
System cable 3.6 mm ... 4.2 mm	2.5 2.5 2.5 2.5 2.5 2.5	1.5 m 3 m 5 m 10 m 15 m 30 m	20 88 821 0015 20 88 821 0030 20 88 821 0050 20 88 821 0100 20 88 821 0150 20 88 821 0300	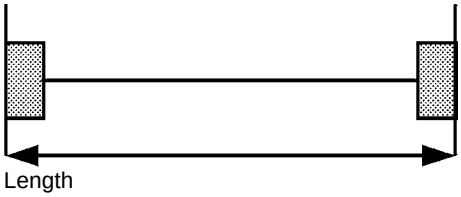

Features

- Per 1 connection for power input, power output and to device
- 2 power contacts
- Plastic housings are integrated in the moulding

Derating

Current carrying capacity

The current carrying capacity of the connectors is limited by the thermal load capability of the contact element material including the connections and the insulating parts. The derating curve is therefore valid for currents which flow constantly (non-intermittent) through each contact element of the connector evenly, without exceeding the allowed maximum temperature.

Measuring and testing techniques acc. to IEC 60512-5-2

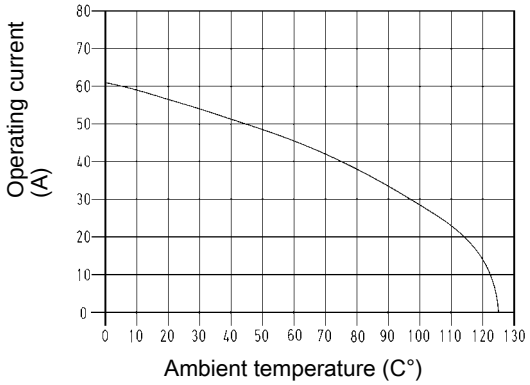

Wire cross section 6 mm²

Technical characteristics

Contacts	2
Electrical data acc. to IEC 61984	**40 A 400 V 6 kV 3**
Rated current	40 A
Rated voltage	400 V
Rated impulse voltage	6 kV
Pollution degree	3
Rated voltage acc. to UL	600 V
Rated voltage acc. to CSA	600 V
Insulation resistance	≥10^{10} Ohm
Flammability (hoods/housings) acc. to UL 94	V 0
Mating cycles	≥500
Degree of protection acc. to IEC 60529	IP65 / IP67
Material (hoods/housings)	polyamide
Colour (hoods/housings)	RAL 9005 (black)
Material (locking lever)	polyamide
Material (seal)	NBR
Material (contact)	copper alloy

Specifications and approvals

IEC 61984
IEC 60664-1

Han-Power® T with 3x Han® Q 2/0

Number of contacts

2+ ⏚

400 V
40 A

Identification	Part number	Drawing Dimensions in mm
Han-Power® T, with 3x Han® Q 2/0, in Han® 3 A Housings, bulkhead mounting, contact resistance ≤1 mOhm	09 12 008 4752	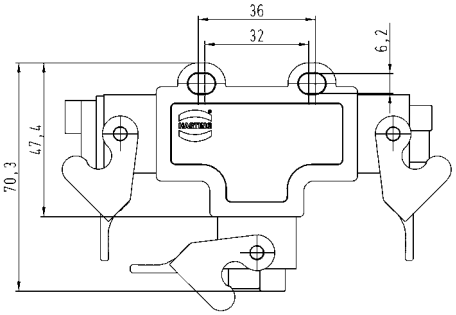

Features

- Per 1 connection for power input, power output and to device
- 4 power contacts
- Plastic housings are integrated in the moulding

Derating

Current carrying capacity

The current carrying capacity of the connectors is limited by the thermal load capability of the contact element material including the connections and the insulating parts. The derating curve is therefore valid for currents which flow constantly (non-intermittent) through each contact element of the connector evenly, without exceeding the allowed maximum temperature.

Measuring and testing techniques acc. to IEC 60512-5-2

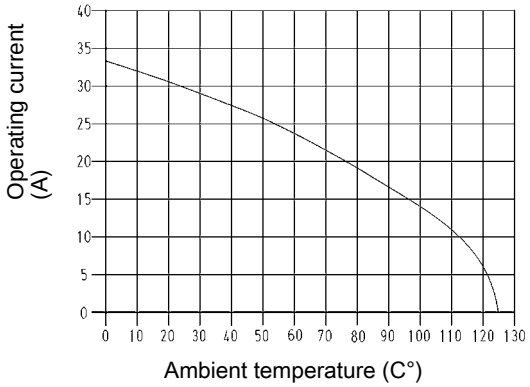

Wire cross section 2.5 mm²

Technical characteristics

Contacts	5
Electrical data acc. to IEC 61984	**16 A 230/400 V 4 kV 3**
Rated current	16 A
Rated voltage conductor - ground	230 V
Rated voltage conductor - conductor	400 V
Rated impulse voltage	4 kV
Pollution degree	3
Rated voltage acc. to UL	600 V
Insulation resistance	≥10^{10} Ohm
Flammability (hoods/housings) acc. to UL 94	V 0
Mating cycles	≥500
Degree of protection acc. to IEC 60529	IP65 / IP67
Material (hoods/housings)	polyamide
Colour (hoods/housings)	RAL 9005 (black)
Material (locking lever)	polyamide
Material (seal)	NBR
Material (contact)	copper alloy

Specifications and approvals

IEC 61984
IEC 60664-1

Han-Power® T with 3x Han® Q 5/0

Number of contacts

5+ ⏚

230/400 V
16 A

Identification	Part number	Drawing Dimensions in mm
Han-Power® T, with 3x Han® Q 5/0, in Han® 3 A Housings, bulkhead mounting, contact resistance ≤1 mOhm	09 12 008 4751	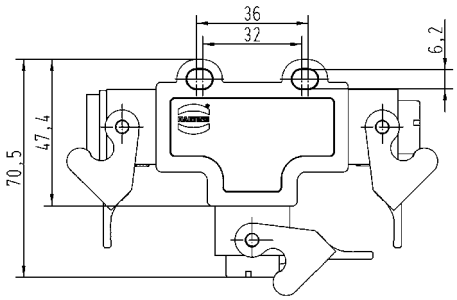

Features

- Per 1 connection for power input, power output and to device
- Finger safe male and female contacts
- 4 power contacts
- 2 signal contacts
- Hoods/Housings, metal

Derating

Current carrying capacity

The current carrying capacity of the connectors is limited by the thermal load capability of the contact element material including the connections and the insulating parts. The derating curve is therefore valid for currents which flow constantly (non-intermittent) through each contact element of the connector evenly, without exceeding the allowed maximum temperature.

Measuring and testing techniques acc. to IEC 60512-5-2

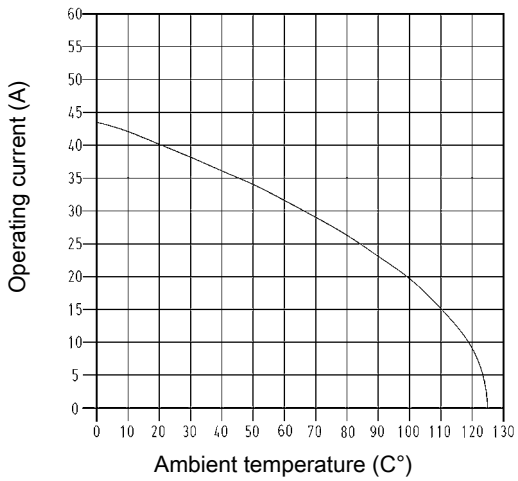

Wire cross section 4 mm²

Technical characteristics

Contacts	4/2
Electrical data acc. to IEC 61984	**40 A 400/690 V 6 kV 3**
Rated current	40 A
Rated voltage conductor - ground	400 V
Rated voltage conductor - conductor	690 V
Rated impulse voltage	6 kV
Pollution degree	3
Electrical data, signal	**10 A 250 V 4 kV 3**
Rated current	10 A
Rated voltage	250 V
Rated impulse voltage	4 kV
Rated voltage acc. to UL	600 V
Rated voltage acc. to UL, signal	250 V
Rated voltage acc. to CSA	250 V
Insulation resistance	≥10^{10} Ohm
Flammability (hoods/housings) acc. to UL 94	V 0
Mating cycles	≥500
Degree of protection acc. to IEC 60529	IP65
Material (hoods/housings)	zinc die-cast
Surface (hoods/housings)	powder-coated
Colour (hoods/housings)	RAL 9005 (black)
Material (locking lever)	stainless steel
Material (seal)	NBR
Material (contact)	copper alloy

Specifications and approvals

IEC 61984
IEC 60664-1

Han-Power® T with 3x Han® Q 4/2

Number of contacts

4/2+ ⏚

400/690 V / 250 V
40 A/10 A

Identification	Part number	Drawing Dimensions in mm
Han-Power® T, with 3x Han® Q 4/2, in Han-Compact® Housings, bulkhead mounting, contact resistance ≤0.3 mOhm	09 12 008 4720	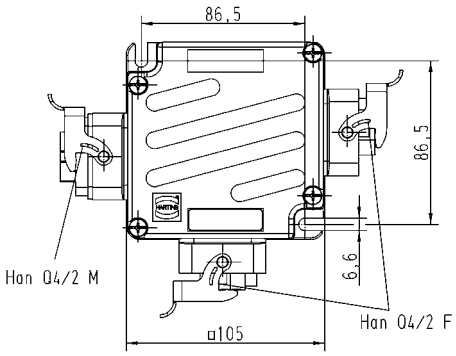

Han-Power

Features

- 1 connection for power input and power output each
- 1 T-connection to device
- 3 power contacts
- 4 signal contacts
- Hoods/Housings, metal
- Han-Easy Lock®

Technical characteristics

Contacts	3/4
Electrical data acc. to IEC 61984	**40 A 400/690 V 6 kV 3**
Rated current	40 A
Rated voltage conductor - ground	400 V
Rated voltage conductor - conductor	690 V
Rated impulse voltage	6 kV
Pollution degree	3
Electrical data, signal	**16 A 400 V 6 kV 3**
Rated current	16 A
Rated voltage	400 V
Rated impulse voltage	6 kV
Rated voltage acc. to UL	600 V
Insulation resistance	≥10^{10} Ohm
Flammability (hoods/housings) acc. to UL 94	V 0
Mating cycles	≥500
Degree of protection acc. to IEC 60529	IP65
Material (hoods/housings)	zinc die-cast
Surface (hoods/housings)	powder-coated
Colour (hoods/housings)	RAL 7037 (grey)
Material (locking lever)	polycarbonate + stainless steel
Material (seal)	NBR
Material (contact)	copper alloy

Specifications and approvals

IEC 61984
IEC 60664-1

Han-Power® T with 3x Han-Modular® Twin

Number of contacts

3/4

400/690 V / 400 V
40 A/16 A

Identification	Part number	Drawing Dimensions in mm
Han-Modular® Twin, with 3x Han-Modular® Twin, Bulkhead mounted housings	09 12 008 4760	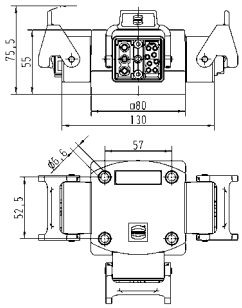

Technical characteristics

Material (accessories) NBR

Identification		Part number	Drawing Dimensions in mm
Han-Power® S, Grommet 7 mm ... 10 mm		09 12 000 9969	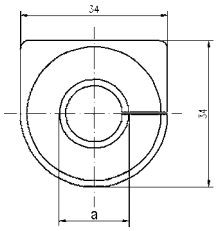
Han-Power® S, Grommet 10 mm ... 13 mm		09 12 000 9970	
Han-Power® S, Grommet 13 mm ... 16 mm		09 12 000 9971	
Han-Power® S, Grommet 16 mm ... 19 mm		09 12 000 9972	
Han-Power® S, Grommet 19 mm ... 22 mm		09 12 000 9973	
Blind grommet	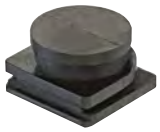	09 12 000 9974	

Contents | Page

Han D® HMC	**16.3**
Han DD® HMC	**16.6**
Contacts Han D/DD® HMC	**16.11**
Han E® HMC	**16.12**
Han® EEE HMC	**16.17**
Contacts Han E® HMC / Han® EEE HMC	**16.20**
Han-Modular® Hinged frames	**16.21**
Han-Modular® Docking frames	**16.26**
Han E® module	**16.30**
Han E® Protected module	**16.32**
Han® EE module	**16.34**
Han® EEE module	**16.36**
Han DD® module	**16.38**
Han® DDD module	**16.40**
Han® HMC hoods/housings	**16.42**
Docking frame	**16.50**

Features

This series Han® HMC (High Mating Cycles) is a connector series specifically aiming at industrial applications for 10,000 mating cycles.

Benefits:

- High mechanical robustness
- Simple and easy understandable design
- Optimized concept for signal and power transmission
- Low mating and unmating forces
- High contact density

General Description

Han® B HMC hoods with high performance locking pin

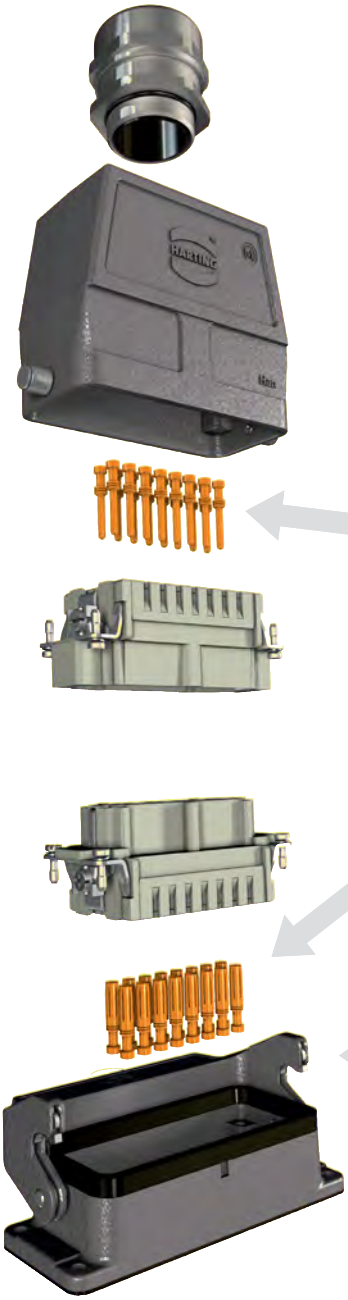

Han D® and Han E® crimp contacts with specific HMC gold coating and a constant contact force

Ground contacts of crimp inserts with long lasting HMC contact spring

Han® B housings with Han-Easy Lock® HMC locking lever

Features

- High density of contacts
- Time saving rapid termination by use of crimping contacts
- For requirements up to 250 V / 10 A
- Suitable for hoods/housings of series Han® B HMC
- Contacts available with special HMC gold plating for 10,000 mating cycles

Derating

Current carrying capacity

The current carrying capacity of the connectors is limited by the thermal load capability of the contact element material including the connections and the insulating parts. The derating curve is therefore valid for currents which flow constantly (non-intermittent) through each contact element of the connector evenly, without exceeding the allowed maximum temperature.

Measuring and testing techniques acc. to IEC 60512-5-2

Han® 40 D HMC

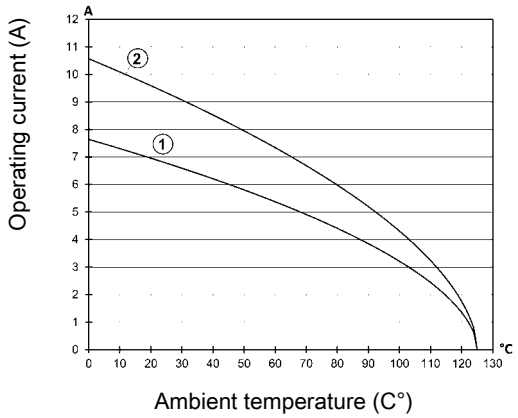

① 0.75 mm²
② 1.5 mm²

Derating

Han® 64 D HMC

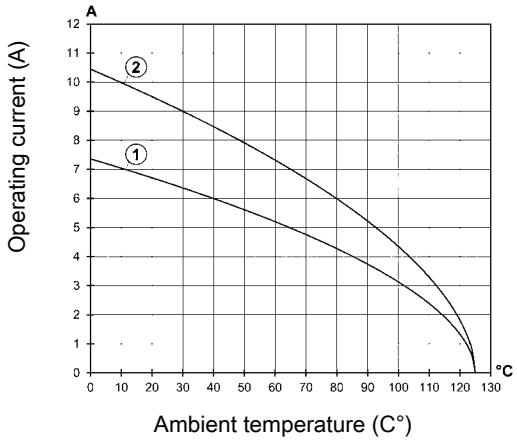

① 0.75 mm²
② 1.5 mm²

Technical characteristics

Contacts	40, 64
Electrical data acc. to IEC 61984	**10 A 250 V 4 kV 3**
Rated current	10 A
Rated voltage	250 V
Rated impulse voltage	4 kV
Pollution degree	3
Insulation resistance	≥10^{10} Ohm
Limiting temperatures	-40 °C ... 125 °C
Flammability (insert) acc. to UL 94	V 0
Mating cycles with HMC contacts	≥10000
Material (insert)	polycarbonate
Colour (insert)	RAL 7032 (light grey)

Specifications and approvals

IEC 60664-1
IEC 61984
EN 175301-801
GL

Number of contacts

40+ ⏚

250 V
10 A

Identification	Part number male	Part number female	Drawing Dimensions in mm
Han D® HMC, Crimp terminal Please order crimp contacts separately.	09 21 240 3001	09 21 240 3101	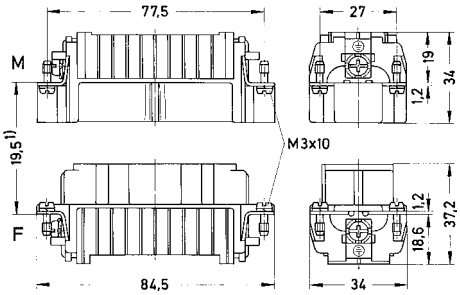 1) Distance for contact max. 21 mm 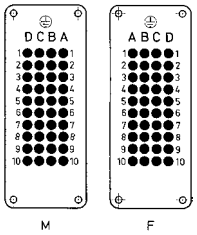 Contact arrangement (view from termination side) 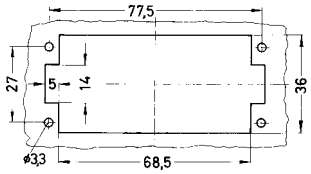 Panel cut out for inserts for use without hoods/housings

Number of contacts

64+ ⏚

250 V
10 A

Identification	Part number male	Part number female	Drawing Dimensions in mm
Han D® HMC, Crimp terminal Please order crimp contacts separately.	09 21 264 3001	09 21 264 3101	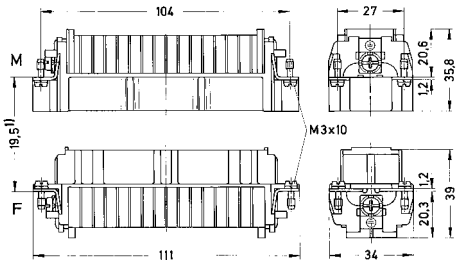 1) Distance for contact max. 21 mm 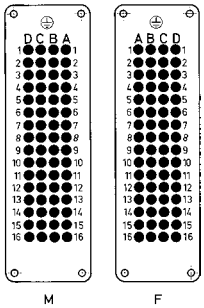 Contact arrangement (view from termination side) 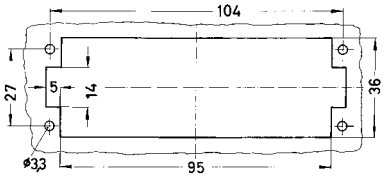 Panel cut out for inserts for use without hoods/housings

Han HMC

Features

- High density of contacts
- Time saving rapid termination by use of crimping contacts
- For requirements up to 250 V / 10 A
- Suitable for hoods/housings of series Han® B HMC
- Contacts available with special HMC gold plating for 10,000 mating cycles

Derating

Current carrying capacity

The current carrying capacity of the connectors is limited by the thermal load capability of the contact element material including the connections and the insulating parts. The derating curve is therefore valid for currents which flow constantly (non-intermittent) through each contact element of the connector evenly, without exceeding the allowed maximum temperature.

Measuring and testing techniques acc. to IEC 60512-5-2

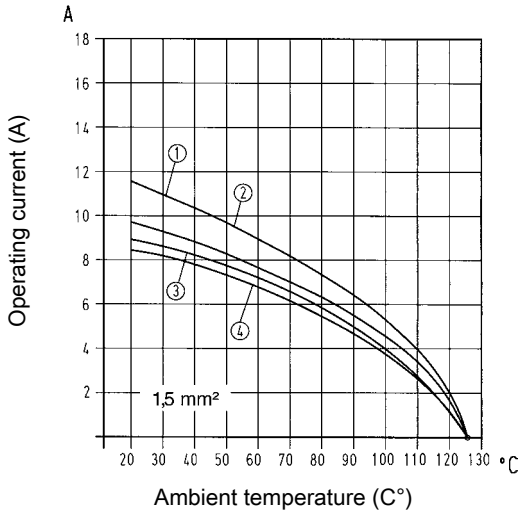

① Han® 24 DD HMC
② Han® 42 DD HMC
③ Han® 72 DD HMC
④ Han® 108 DD HMC

Derating

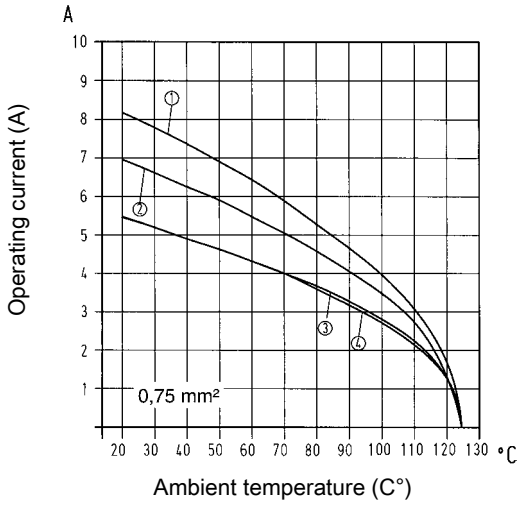

① Han® 24 DD HMC
② Han® 42 DD HMC
③ Han® 72 DD HMC
④ Han® 108 DD HMC

Technical characteristics

Contacts	24, 42, 72, 108
Electrical data acc. to IEC 61984	**10 A 250 V 4 kV 3**
Rated current	10 A
Rated voltage	250 V
Rated impulse voltage	4 kV
Pollution degree	3
Insulation resistance	≥10^{10} Ohm
Limiting temperatures	-40 °C ... 125 °C
Flammability (insert) acc. to UL 94	V 0
Mating cycles with HMC contacts	≥10000
Material (insert)	polycarbonate
Colour (insert)	RAL 7032 (light grey)

Specifications and approvals

IEC 60664-1
IEC 61984
GL

Number of contacts

24+ ⏚

250 V
10 A

Identification	Part number male	Part number female	Drawing Dimensions in mm
Han DD® HMC, Crimp terminal Please order crimp contacts separately. Only with Han® Docking frame.	09 16 224 3001	09 16 224 3101	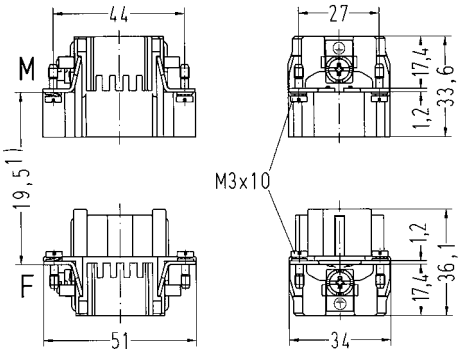 1) Distance for contact max. 21 mm 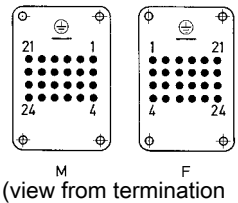 Contact arrangement (view from termination side) 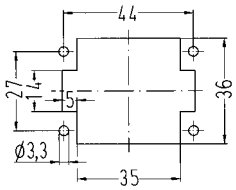 Panel cut out for inserts for use without hoods/housings

Number of contacts

42+ ⏚

250 V
10 A

Identification	Part number male	Part number female	Drawing Dimensions in mm
Han DD® HMC, Crimp terminal Please order crimp contacts separately.	09 16 242 3001	09 16 242 3101	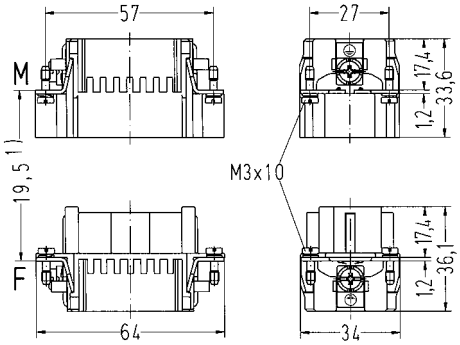 1) Distance for contact max. 21 mm 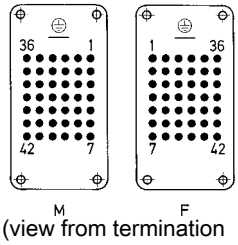 Contact arrangement (view from termination side) 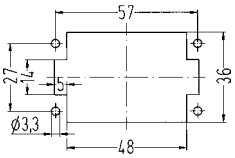 Panel cut out for inserts for use without hoods/housings

Number of contacts

72+ ⏚

250 V
10 A

Identification	Part number male	Part number female	Drawing Dimensions in mm
Han DD® HMC, Crimp terminal Please order crimp contacts separately.	09 16 272 3001	09 16 272 3101	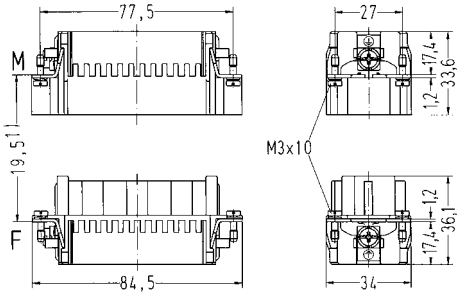 1) Distance for contact max. 21 mm 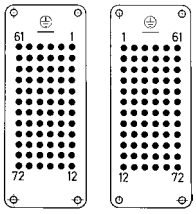 Contact arrangement (view from termination side) 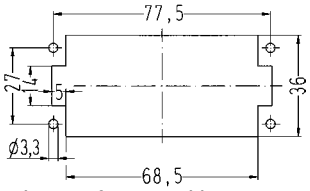 Panel cut out for inserts for use without hoods/housings

Number of contacts

108+ ⏚

250 V
10 A

Identification	Part number male	Part number female	Drawing Dimensions in mm
Han DD® HMC, Crimp terminal Please order crimp contacts separately.	09 16 208 3001	09 16 208 3101	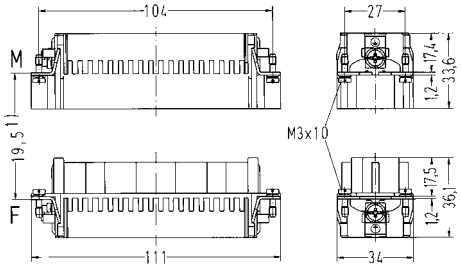 1) Distance for contact max. 21 mm 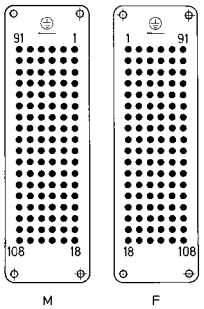 Contact arrangement (view from termination side) 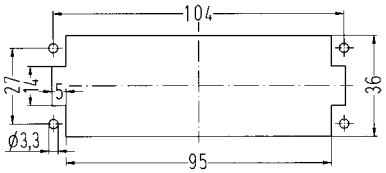 Panel cut out for inserts for use without hoods/housings

Technical characteristics

Material (contact)	copper alloy

Specifications and approvals

IEC 60664-1
IEC 61984

Details

Crimping tools see chapter 90

Remarks on the crimp technique

The wire gauges mentioned in the catalogue refer to geometric wire gauges of cables.

Coding pin

Use of the coding pin prevents incorrect mating to other connectors of the same type. The male pin should be omitted from the opposing cavity in the male insert.

Identification	Wire cross section (mm²)	Part number male	Part number female	Drawing Dimensions in mm
Han D® HMC, Crimp contact, HMC gold plated contacts, contact resistance ≤3 mOhm 	0.14 – 0.37 0.5 0.75 1 1.5 2.5	09 15 200 6124 09 15 200 6123 09 15 200 6125 09 15 200 6122 09 15 200 6121 09 15 200 6126	09 15 200 6224 09 15 200 6223 09 15 200 6225 09 15 200 6222 09 15 200 6221 09 15 200 6226	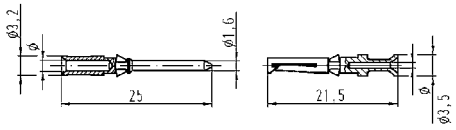
Han D®, Han DD®, Coding pin, plastic only for crimp termination with loss of one contact			09 33 000 9915	

Wire gauge		⌀	Stripping length
0.14-0.37 mm²	AWG 26-22	0.9 mm	8 mm
0.5 mm²	AWG 20	1.1 mm	8 mm
0.75 mm²	AWG 18	1.3 mm	8 mm
1 mm²	AWG 18	1.45 mm	8 mm
1.5 mm²	AWG 16	1.75 mm	8 mm
2.5 mm²	AWG 14	2.25 mm	6 mm

Features

- Time saving rapid termination by use of crimping contacts
- Suitable for hoods/housings of series Han® B HMC
- Contacts available with special HMC gold plating for 10,000 mating cycles

Derating

Current carrying capacity

The current carrying capacity of the connectors is limited by the thermal load capability of the contact element material including the connections and the insulating parts. The derating curve is therefore valid for currents which flow constantly (non-intermittent) through each contact element of the connector evenly, without exceeding the allowed maximum temperature.

Measuring and testing techniques acc. to IEC 60512-5-2

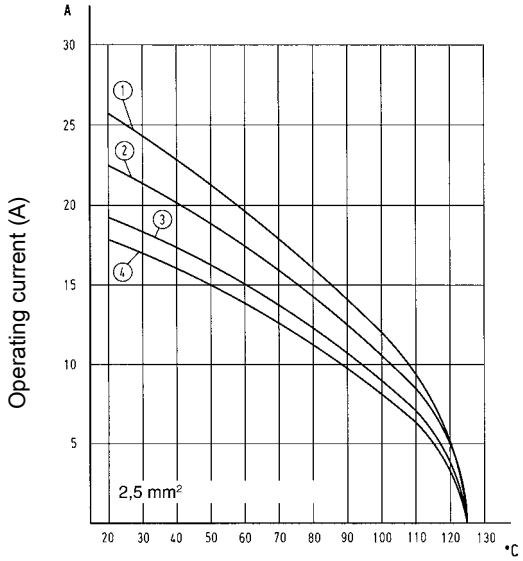

Ambient temperature (C°)

① Han® 6 E HMC
② Han® 10 E HMC
③ Han® 16 E HMC
④ Han® 24 E HMC

Derating

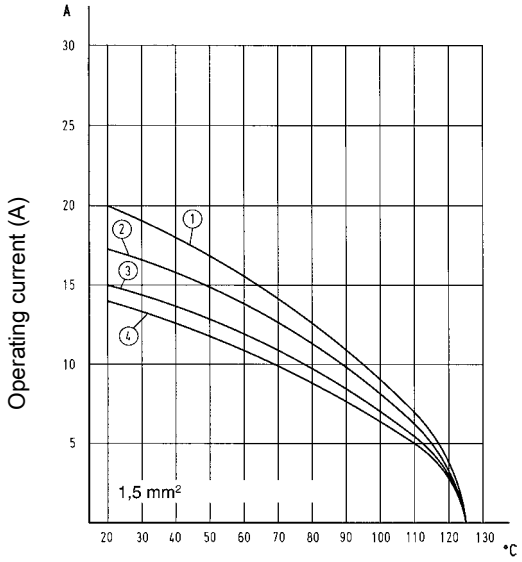

Ambient temperature (C°)

① Han® 6 E HMC
② Han® 10 E HMC
③ Han® 16 E HMC
④ Han® 24 E HMC

Technical characteristics

Contacts	6, 10, 16, 24
Electrical data acc. to IEC 61984	**16 A 500 V 6 kV 3**
Rated current	16 A
Rated voltage	500 V
Rated impulse voltage	6 kV
Pollution degree	3
Insulation resistance	≥10^{10} Ohm
Limiting temperatures	-40 °C ... 125 °C
Flammability (insert) acc. to UL 94	V 0
Mating cycles with HMC contacts	≥10000
Material (insert)	polycarbonate
Colour (insert)	RAL 7032 (light grey)

Specifications and approvals

IEC 60664-1
IEC 61984
GL

Number of contacts

6+ ⏚

500 V
16 A

Identification	Part number male	Part number female	Drawing Dimensions in mm
Han E® HMC, Crimp terminal 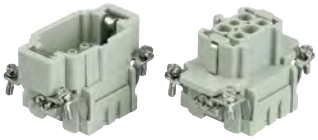 Please order crimp contacts separately. Only with Han® Docking frame.	09 33 206 2602	09 33 206 2702	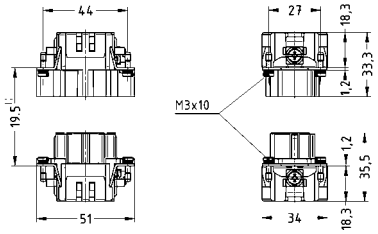 1) Distance for contact max. 21 mm 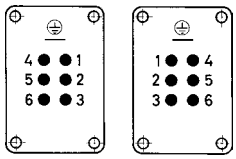 M F Contact arrangement (view from termination side) 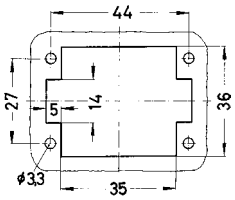 Panel cut out

Number of contacts

10+ ⏚

500 V
16 A

Identification	Part number male	Part number female	Drawing Dimensions in mm
Han E® HMC, Crimp terminal 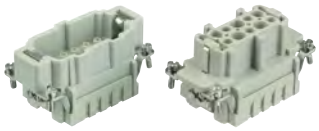 Please order crimp contacts separately.	09 33 210 2602	09 33 210 2702	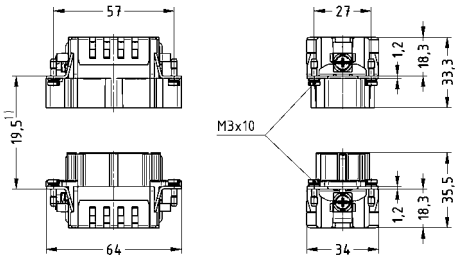 1) Distance for contact max. 21 mm 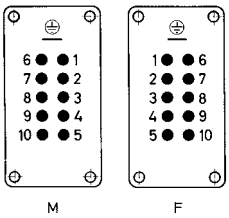 Contact arrangement (view from termination side) 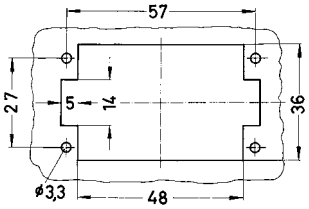 Panel cut out

Number of contacts

16+ ⏚

500 V
16 A

Identification	Part number male	Part number female	Drawing Dimensions in mm
Han E® HMC, Crimp terminal Please order crimp contacts separately.	09 33 216 2602	09 33 216 2702	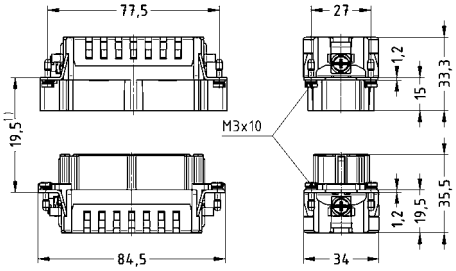 1) Distance for contact max. 21 mm 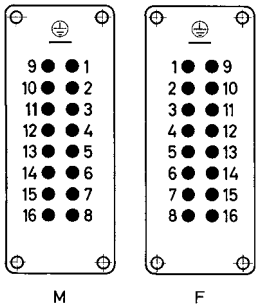 Contact arrangement (view from termination side) 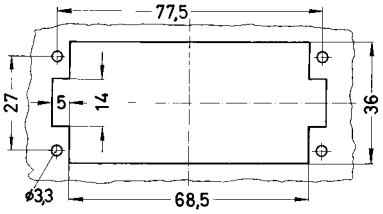 Panel cut out

Han HMC

Number of contacts

24+ ⏚

500 V
16 A

Identification	Part number male	Part number female	Drawing Dimensions in mm
Han E® HMC, Crimp terminal 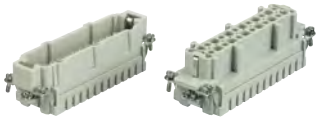 Please order crimp contacts separately.	09 33 224 2602	09 33 224 2702	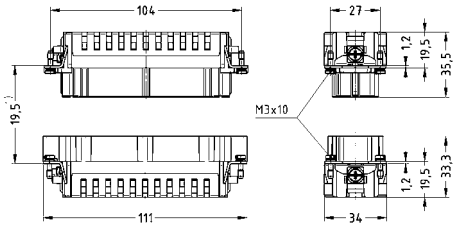 1) Distance for contact max. 21 mm 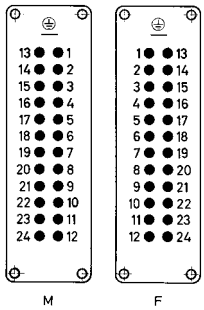 Contact arrangement (view from termination side) 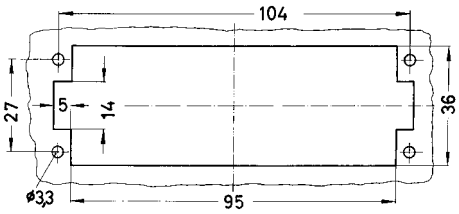 Panel cut out

Features

- Time saving rapid termination by use of crimping contacts
- Coded insert
- Suitable for hoods/housings of series Han® B HMC
- Contacts available with special HMC gold plating for 10,000 mating cycles

Derating

Current carrying capacity

The current carrying capacity of the connectors is limited by the thermal load capability of the contact element material including the connections and the insulating parts. The derating curve is therefore valid for currents which flow constantly (non-intermittent) through each contact element of the connector evenly, without exceeding the allowed maximum temperature.

Measuring and testing techniques acc. to IEC 60512-5-2

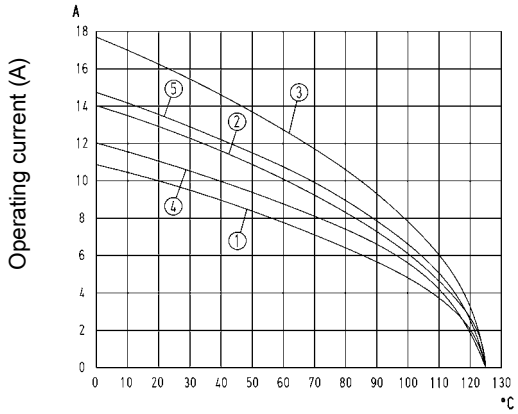

① Han® 64 EEE HMC 1.5 mm²
② Han® 64 EEE HMC 2.5 mm²
③ Han® 64 EEE HMC 4 mm²
④ Han® 40 EEE HMC 1.5 mm²
⑤ Han® 40 EEE HMC 2.5 mm²

Technical characteristics

Contacts	40, 64
Electrical data acc. to IEC 61984	**16 A 500 V 6 kV 3**
Rated current	16 A
Rated voltage	500 V
Rated impulse voltage	6 kV
Pollution degree	3
Insulation resistance	≥10^{10} Ohm
Limiting temperatures	-40 °C ... 125 °C
Flammability (insert) acc. to UL 94	V 0
Mating cycles with HMC contacts	≥10000
Material (insert)	polycarbonate
Colour (insert)	RAL 7032 (light grey)

Specifications and approvals

IEC 60664-1
IEC 61984

Number of contacts

40+ ⏚

500 V
16 A

Identification	Part number male	Part number female	Drawing Dimensions in mm
Han® EEE HMC, Crimp terminal Please order crimp contacts separately.	09 32 240 3001	09 32 240 3101	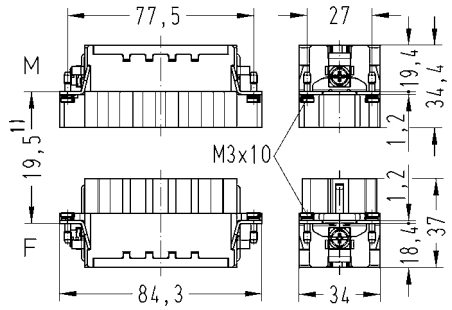 1) Distance for contact max. 21 mm 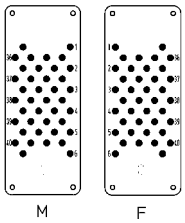 Contact arrangement (view from termination side) 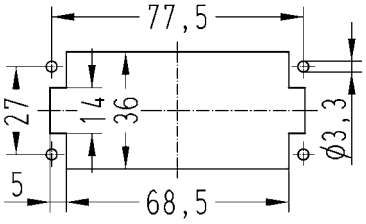 Panel cut out

Number of contacts

64+ ⏚

500 V
16 A

Identification	Part number male	Part number female	Drawing Dimensions in mm
Han® EEE HMC, Crimp terminal Please order crimp contacts separately.	09 32 264 3001	09 32 264 3101	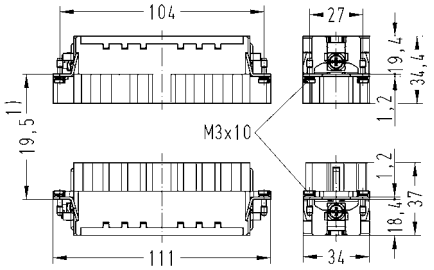 1) Distance for contact max. 21 mm 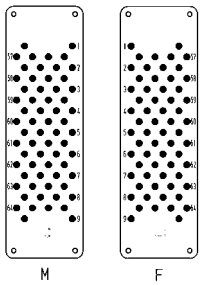 Contact arrangement (view from termination side) 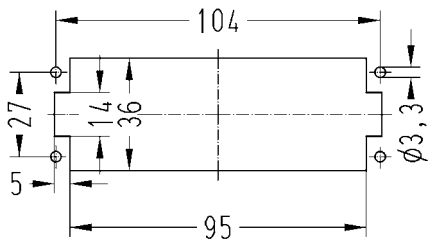 Panel cut out

Technical characteristics

Material (contact)	copper alloy

Specifications and approvals

IEC 60664-1
IEC 61984

Details

Crimping tools see chapter 90

Remarks on the crimp technique

The wire gauges mentioned in the catalogue refer to geometric wire gauges of cables.

Coding pin

Use of the coding pin prevents incorrect mating to other connectors of the same type. The male pin should be omitted from the opposing cavity in the male insert.

Identification	Wire cross section (mm²)	Part number male	Part number female	Drawing Dimensions in mm
Han E® HMC, Crimp contact, HMC gold plated contacts, contact resistance ≤1 mOhm	0.14 – 0.37	09 33 200 6117	09 33 200 6217	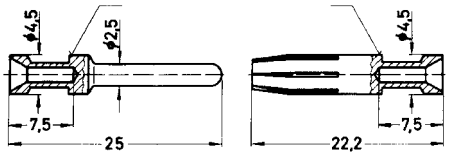
	0.5	09 33 200 6122	09 33 200 6222	
	0.75	09 33 200 6115	09 33 200 6215	
	1	09 33 200 6118	09 33 200 6218	
	1.5	09 33 200 6116	09 33 200 6216	
	2.5	09 33 200 6123	09 33 200 6223	
	4	09 33 200 6119	09 33 200 6221	
Han E®, Han® EE, Han® EEE, Coding pin, plastic			09 33 000 9954	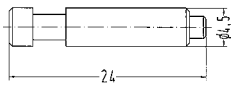

for crimp inserts only

Identification	Wire gauge		Stripping length
no groove	0.14-0.37 mm²	AWG 26-22	7.5 mm
no groove	0.5 mm²	AWG 20	7.5 mm
1 groove*	0.75 mm²	AWG 18	7.5 mm
1 groove	1 mm²	AWG 18	7.5 mm
2 grooves	1.5 mm²	AWG 16	7.5 mm
3 grooves	2.5 mm²	AWG 14	7.5 mm
wide groove	3 mm²	AWG 12	7.5 mm
no groove	4 mm²	AWG 12	7.5 mm

* on the back crimp collar

Features

- Pre-leading grounding system according VDE
- Modules can only be assembled polarized
- Alphabetical marking of module position
- High mechanical reliability of modules in case of vibration and impact stress
- No tools necessary to remove modules
- Hinged frames can be used either in hood or housing

Technical characteristics

Limiting temperatures	-40 °C ... 125 °C
Mating cycles with HMC connectors	≥10000
Material (hoods/housings)	zinc die-cast

Specifications and approvals

IEC 60664-1
IEC 61984

Details

Both different markings must be used for one connector!

Locking element 09 14 000 9960 see accessories in chapter 06

Wire gauge PE (power side) 4 ... 10 mm²

10 mm² only with ferrule crimp tool 09 99 000 0374 (see chapter 90)

Wire gauge PE (signal side) 1 ... 2.5 mm²

Identification	Part number	Drawing Dimensions in mm
Han-Modular®, Hinged frame HMC, for 2 modules, A ... B Only with Han® Docking frame.	09 14 206 0303	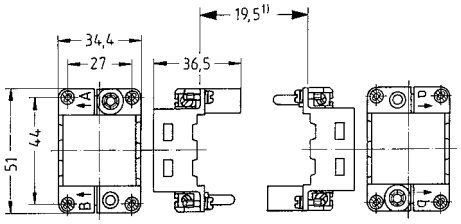 1) Distance max. 20.5 mm
Han-Modular®, Hinged frame HMC, for 2 modules, a ... b Only with Han® Docking frame.	09 14 206 0313	

Identification	Part number	Drawing Dimensions in mm
Han-Modular®, Hinged frame HMC, for 3 modules, A ... C	09 14 210 0303	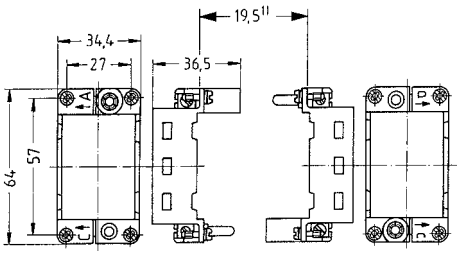 1) Distance max. 20.5 mm
Han-Modular®, Hinged frame HMC, for 3 modules, a ... c	09 14 210 0313	

Identification	Part number	Drawing Dimensions in mm
Han-Modular®, Hinged frame HMC, for 4 modules, A ... D	09 14 216 0303	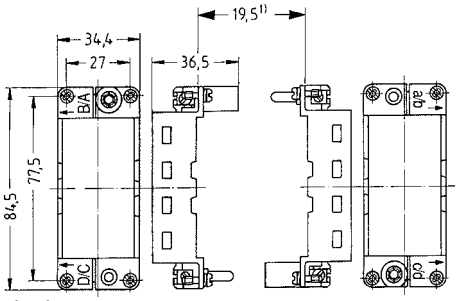 1) Distance max. 20.5 mm
Han-Modular®, Hinged frame HMC, for 4 modules, a ... d	09 14 216 0313	

Identification	Part number	Drawing Dimensions in mm
Han-Modular®, Hinged frame HMC, for 6 modules, A ... F	09 14 224 0303	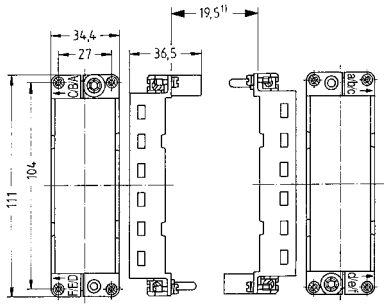 1) Distance max. 20.5 mm
Han-Modular®, Hinged frame HMC, for 6 modules, a ... f	09 14 224 0313	

Features

- Blind mating connector system for drawer systems
- Direct panel mounting without housing
- Very robust design
- Solid pre-leading guide pins and float bushes
- Can be fixed with standard M4 screws
- Suitable for Han-Modular® modules

Technical characteristics

Limiting temperatures	-40 °C ... 125 °C
Flammability (hoods/housings) acc. to UL 94	V 0
Mating cycles	≥500
Mating cycles with HMC connectors	≥10000
Degree of protection acc. to IEC 60529	IP20
Material (accessories)	polycarbonate
Tolerance	±2 mm
Lock-in range	±4 mm

Specifications and approvals

IEC 60664-1
IEC 61984

Details

Due the plastic material used in the docking frame without PE, the panel will need to be grounded separately.

Identification		Part number	Drawing Dimensions in mm
Han-Modular®, Docking frame, float mount, for 2 modules, A ... B		09 14 006 1701	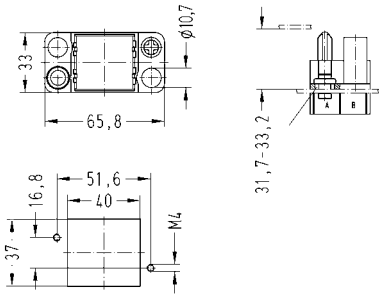 ① floating tolerance ±2 mm Panel cut out
Han-Modular®, Docking frame, fixed, for 2 modules, a ... b		09 14 006 1711	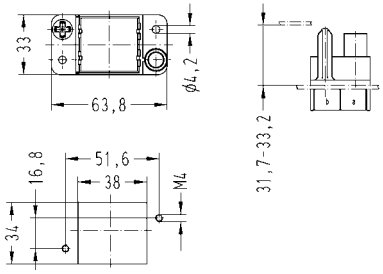 Panel cut out
Han-Modular®, Docking frame, float mount, for 3 modules, A ... C		09 14 010 1701	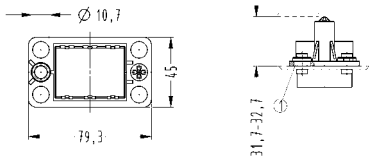 ① floating tolerance ±2 mm
Han-Modular®, Docking frame, fixed, for 3 modules, a ... c		09 14 010 1711	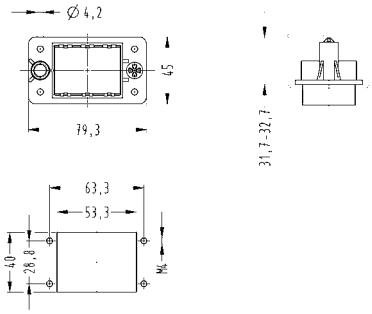 Panel cut out

Identification		Part number	Drawing Dimensions in mm
Han-Modular®, Docking frame, float mount, for 4 modules, A ... D		09 14 016 1701	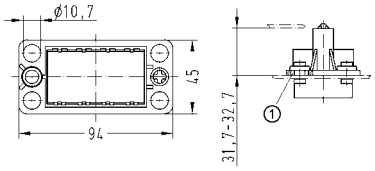 ① floating tolerance ±2 mm 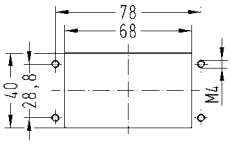 Panel cut out
Han-Modular®, Docking frame, fixed, for 4 modules, a ... d		09 14 016 1711	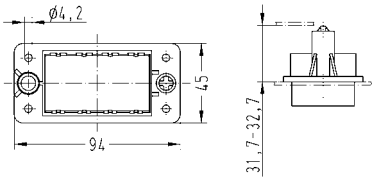 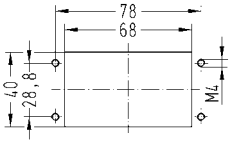 Panel cut out
Han-Modular®, Docking frame, float mount, for 6 modules, A ... F		09 14 024 1701	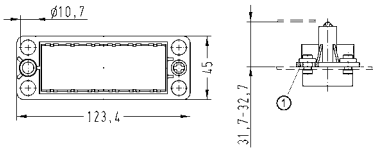 ① floating tolerance ±2 mm 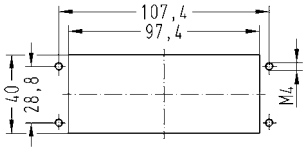 Panel cut out
Han-Modular®, Docking frame, fixed, for 6 modules, a ... f		09 14 024 1711	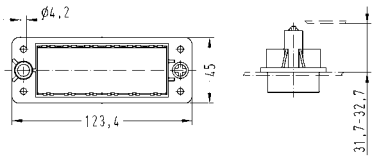 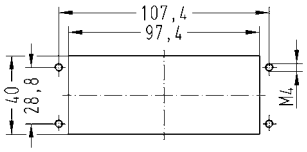 Panel cut out

Identification	Part number	Drawing Dimensions in mm
Han-Modular®, Float washer, zinc die-cast to enable the frame to be float mounted using standard M4 fixing screws	09 14 000 9936	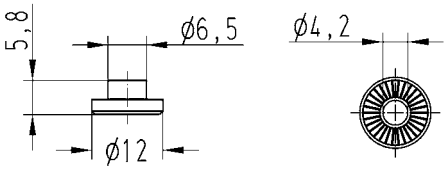

Features

- Standard module for power up to 16 A

Derating

Current carrying capacity

The current carrying capacity of the connectors is limited by the thermal load capability of the contact element material including the connections and the insulating parts. The derating curve is therefore valid for currents which flow constantly (non-intermittent) through each contact element of the connector evenly, without exceeding the allowed maximum temperature.

Measuring and testing techniques acc. to IEC 60512-5-2

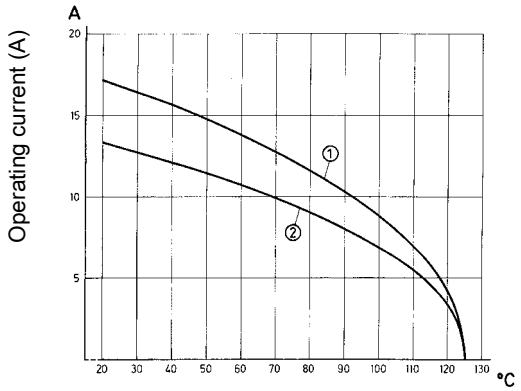

Ambient temperature (C°)

① 24 B hoods/housings with 6 modules Wire cross section 2.5 mm²
② 24 B hoods/housings with 6 modules Wire cross section 1.5 mm²

Technical characteristics

Contacts	6
Electrical data acc. to IEC 61984	**16 A 500 V 6 kV 3**
Rated current	16 A
Rated voltage	500 V
Rated impulse voltage	6 kV
Pollution degree	3
Rated voltage acc. to UL	600 V
Insulation resistance	≥10^{10} Ohm
Limiting temperatures	-40 °C ... 125 °C
Flammability (insert) acc. to UL 94	V 0
Mating cycles	≥500
Mating cycles with HMC contacts	≥10000
Material (insert)	polycarbonate
Colour (insert)	RAL 7032 (light grey)
Material (contact)	copper alloy

Specifications and approvals

IEC 60664-1
IEC 61984

Details

Crimping tools see chapter 90

Remarks on the crimp technique

The wire gauges mentioned in the catalogue refer to geometric wire gauges of cables.

Designed for 10,000 mating cycles (only with Han E® HMC crimp contacts, Han-Modular® Docking frame and Han-Modular® Hinged frame HMC)

Number of contacts

6+ ⏚

500 V
16 A

Identification	Wire cross section (mm²)	Part number male	Part number female	Drawing Dimensions in mm
Han-Modular®, Han E® module, Crimp terminal Please order crimp contacts separately.		09 14 006 3001	09 14 006 3101	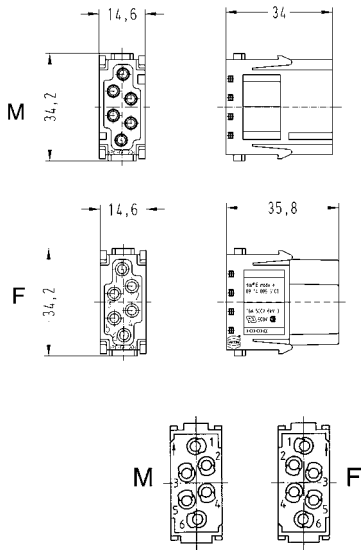 Contact arrangement (view from termination side)
Han E® HMC, Crimp contact, HMC gold plated contacts, contact resistance ≤1 mOhm 	0.14 – 0.37 0.5 0.75 1 1.5 2.5 4	09 33 200 6117 09 33 200 6122 09 33 200 6115 09 33 200 6118 09 33 200 6116 09 33 200 6123 09 33 200 6119	09 33 200 6217 09 33 200 6222 09 33 200 6215 09 33 200 6218 09 33 200 6216 09 33 200 6223 09 33 200 6221	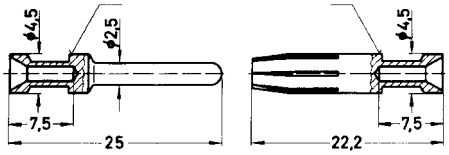

Identification	Wire gauge		Stripping length
no groove	0.14-0.37 mm²	AWG 26-22	7.5 mm
no groove	0.5 mm²	AWG 20	7.5 mm
1 groove*	0.75 mm²	AWG 18	7.5 mm
1 groove	1 mm²	AWG 18	7.5 mm
2 grooves	1.5 mm²	AWG 16	7.5 mm
3 grooves	2.5 mm²	AWG 14	7.5 mm
wide groove	3 mm²	AWG 12	7.5 mm
no groove	4 mm²	AWG 12	7.5 mm

* on the back crimp collar

Features

- Suitable for Han E® crimp contacts
- Designed for a high working voltage up to 830 V
- Finger safe male and female contacts

Derating

Current carrying capacity

The current carrying capacity of the connectors is limited by the thermal load capability of the contact element material including the connections and the insulating parts. The derating curve is therefore valid for currents which flow constantly (non-intermittent) through each contact element of the connector evenly, without exceeding the allowed maximum temperature.

Measuring and testing techniques acc. to IEC 60512-5-2

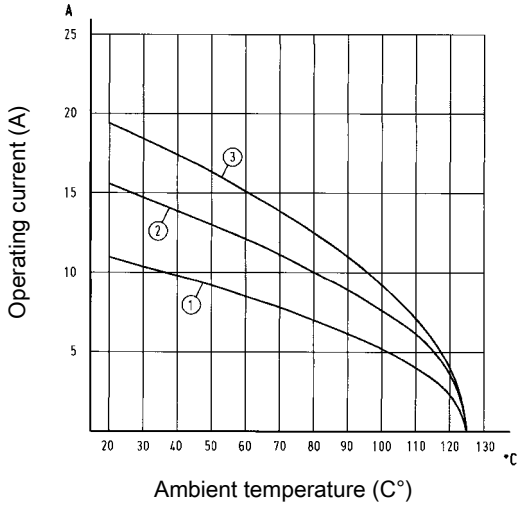

① 24 B hoods/housings with 6 modules Wire cross section 1.5 mm²
② 24 B hoods/housings with 6 modules Wire cross section 2.5 mm²
③ 24 B hoods/housings with 6 modules Wire cross section 4 mm²

Technical characteristics

Contacts	6
Electrical data acc. to IEC 61984	**16 A 830 V 8 kV 3**
Rated current	16 A
Rated voltage	830 V
Rated impulse voltage	8 kV
Pollution degree	3
Rated voltage acc. to UL	600 V
Insulation resistance	≥10^{10} Ohm
Limiting temperatures	-40 °C ... 125 °C
Flammability (insert) acc. to UL 94	V 0
Mating cycles	≥500
Mating cycles with HMC contacts	≥10000
Material (insert)	polycarbonate
Colour (insert)	RAL 7032 (light grey)
Material (contact)	copper alloy

Specifications and approvals

IEC 60664-1
IEC 61984

Details

Crimping tools see chapter 90

Remarks on the crimp technique

The wire gauges mentioned in the catalogue refer to geometric wire gauges of cables.

Designed for 10,000 mating cycles (only with Han E® HMC crimp contacts, Han-Modular® Docking frame and Han-Modular® Hinged frame HMC)

Number of contacts

6

830 V
16 A

Identification	Wire cross section (mm²)	Part number male	Part number female	Drawing Dimensions in mm
Han-Modular®, Han E® Protected module, Crimp terminal Please order crimp contacts separately.		09 14 006 3041	09 14 006 3141	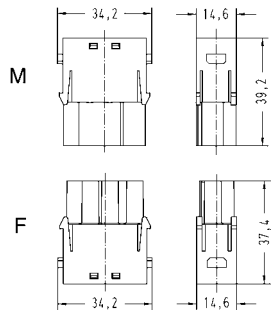 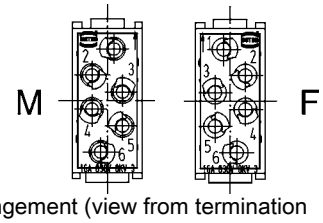 Contact arrangement (view from termination side)
Han E® HMC, Crimp contact, HMC gold plated contacts, contact resistance ≤1 mOhm 	0.14 – 0.37 0.5 0.75 1 1.5 2.5 4	09 33 200 6117 09 33 200 6122 09 33 200 6115 09 33 200 6118 09 33 200 6116 09 33 200 6123 09 33 200 6119	09 33 200 6217 09 33 200 6222 09 33 200 6215 09 33 200 6218 09 33 200 6216 09 33 200 6223 09 33 200 6221	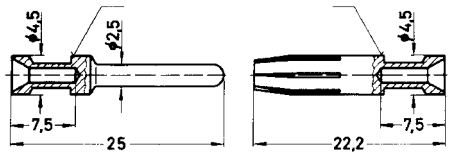

Identification	Wire gauge		Stripping length
no groove	0.14-0.37 mm²	AWG 26-22	7.5 mm
no groove	0.5 mm²	AWG 20	7.5 mm
1 groove*	0.75 mm²	AWG 18	7.5 mm
1 groove	1 mm²	AWG 18	7.5 mm
2 grooves	1.5 mm²	AWG 16	7.5 mm
3 grooves	2.5 mm²	AWG 14	7.5 mm
wide groove	3 mm²	AWG 12	7.5 mm
no groove	4 mm²	AWG 12	7.5 mm

* on the back crimp collar

Features

- High contact density

Derating

Current carrying capacity

The current carrying capacity of the connectors is limited by the thermal load capability of the contact element material including the connections and the insulating parts. The derating curve is therefore valid for currents which flow constantly (non-intermittent) through each contact element of the connector evenly, without exceeding the allowed maximum temperature.

Measuring and testing techniques acc. to IEC 60512-5-2

Crimp terminal

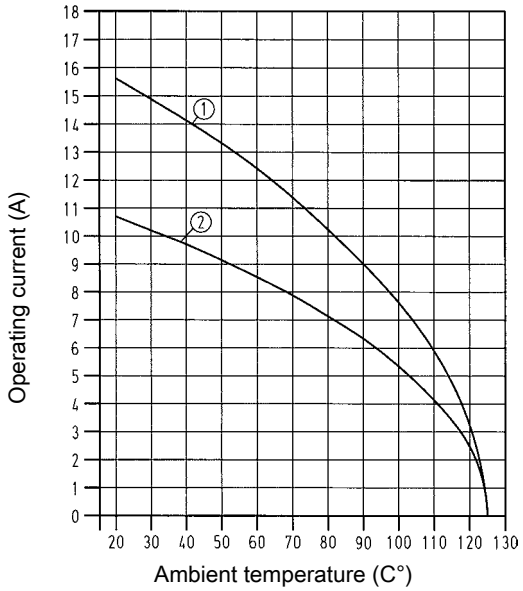

① 24 B hoods/housings with 6 modules Wire cross section 2.5 mm²
② 24 B hoods/housings with 6 modules Wire cross section 1.5 mm²

Technical characteristics

Contacts	8
Electrical data acc. to IEC 61984	**16 A 400 V 6 kV 3**
Rated current	16 A
Rated voltage	400 V
Rated impulse voltage	6 kV
Pollution degree	3
Rated voltage acc. to UL	600 V
Insulation resistance	≥10^{10} Ohm
Limiting temperatures	-40 °C ... 125 °C
Flammability (insert) acc. to UL 94	V 0
Mating cycles	≥500
Mating cycles with HMC contacts	≥10000
Material (insert)	polycarbonate
Colour (insert)	RAL 7032 (light grey)
Material (contact)	copper alloy

Specifications and approvals

IEC 60664-1
IEC 61984

Details

Crimping tools see chapter 90

Remarks on the crimp technique

The wire gauges mentioned in the catalogue refer to geometric wire gauges of cables.

Designed for 10,000 mating cycles (only with Han E® HMC crimp contacts, Han-Modular® Docking frame and Han-Modular® Hinged frame HMC)

Number of contacts

8+ ⏚

400 V
16 A

Identification	Wire cross section (mm²)	Part number male	Part number female	Drawing Dimensions in mm
Han-Modular®, Han® EE module, Crimp terminal Please order crimp contacts separately.		09 14 008 3001	09 14 008 3101	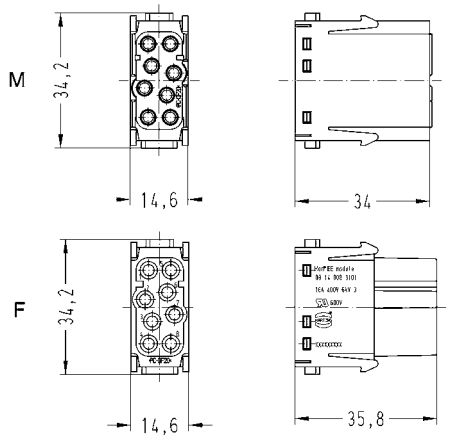 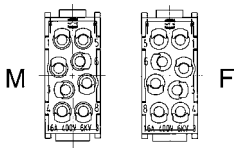 Contact arrangement (view from termination side)
Han E® HMC, Crimp contact, HMC gold plated contacts, contact resistance ≤1 mOhm 	0.14 – 0.37 0.5 0.75 1 1.5 2.5 4	09 33 200 6117 09 33 200 6122 09 33 200 6115 09 33 200 6118 09 33 200 6116 09 33 200 6123 09 33 200 6119	09 33 200 6217 09 33 200 6222 09 33 200 6215 09 33 200 6218 09 33 200 6216 09 33 200 6223 09 33 200 6221	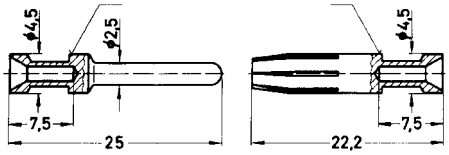

Identification	Wire gauge		Stripping length
no groove	0.14-0.37 mm²	AWG 26-22	7.5 mm
no groove	0.5 mm²	AWG 20	7.5 mm
1 groove*	0.75 mm²	AWG 18	7.5 mm
1 groove	1 mm²	AWG 18	7.5 mm
2 grooves	1.5 mm²	AWG 16	7.5 mm
3 grooves	2.5 mm²	AWG 14	7.5 mm
wide groove	3 mm²	AWG 12	7.5 mm
no groove	4 mm²	AWG 12	7.5 mm

* on the back crimp collar

Features

- Suitable for Han E® crimp contacts
- Higher density of crimping contacts
- Standard module for power up to 16 A
- Also suitable as a reliable signal connector

Derating

Current carrying capacity

The current carrying capacity of the connectors is limited by the thermal load capability of the contact element material including the connections and the insulating parts. The derating curve is therefore valid for currents which flow constantly (non-intermittent) through each contact element of the connector evenly, without exceeding the allowed maximum temperature.

Measuring and testing techniques acc. to IEC 60512-5-2

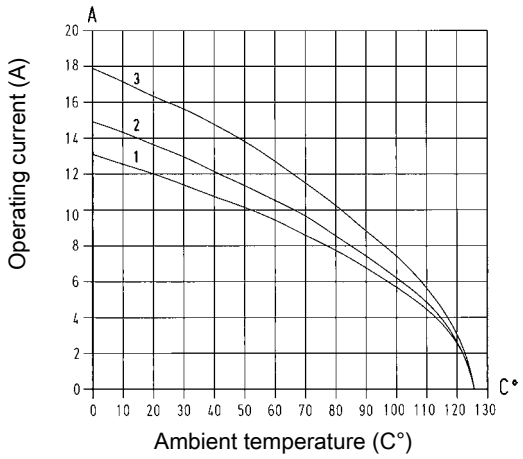

① 24 B hoods/housings with 3 modules Wire cross section 1.5 mm²
② 24 B hoods/housings with 3 modules Wire cross section 2.5 mm²
③ 24 B hoods/housings with 3 modules Wire cross section 4 mm²

Technical characteristics

Contacts	20
Electrical data acc. to IEC 61984	**16 A 500 V 6 kV 3**
Rated current	16 A
Rated voltage	500 V
Rated impulse voltage	6 kV
Pollution degree	3
Rated voltage acc. to UL	600 V
Insulation resistance	≥10^{10} Ohm
Limiting temperatures	-40 °C ... 125 °C
Flammability (insert) acc. to UL 94	V 0
Mating cycles	≥500
Mating cycles with HMC contacts	≥10000
Material (insert)	polycarbonate
Colour (insert)	RAL 7032 (light grey)
Material (contact)	copper alloy

Specifications and approvals

IEC 60664-1
IEC 61984

Details

Crimping tools see chapter 90

Remarks on the crimp technique

The wire gauges mentioned in the catalogue refer to geometric wire gauges of cables.

Designed for 10,000 mating cycles (only with Han E® HMC crimp contacts, Han-Modular® Docking frame and Han-Modular® Hinged frame HMC)

Number of contacts

20

500 V
16 A

Identification	Wire cross section (mm²)	Part number male	Part number female	Drawing Dimensions in mm
Han-Modular®, Han® EEE module, Crimp terminal Please order crimp contacts separately.		09 14 020 3001	09 14 020 3101	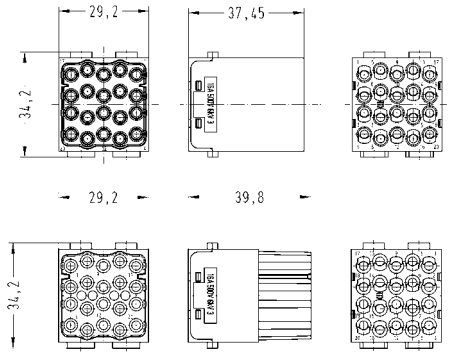 Contact arrangement (view from termination side)
Han E® HMC, Crimp contact, HMC gold plated contacts, contact resistance ≤1 mOhm 	0.14 – 0.37 0.5 0.75 1 1.5 2.5 4	09 33 200 6117 09 33 200 6122 09 33 200 6115 09 33 200 6118 09 33 200 6116 09 33 200 6123 09 33 200 6119	09 33 200 6217 09 33 200 6222 09 33 200 6215 09 33 200 6218 09 33 200 6216 09 33 200 6223 09 33 200 6221	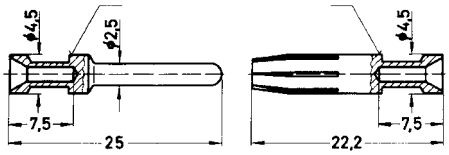 Identification / Wire gauge / Stripping length no groove / 0.14-0.37 mm² / AWG 26-22 / 7.5 mm no groove / 0.5 mm² / AWG 20 / 7.5 mm 1 groove* / 0.75 mm² / AWG 18 / 7.5 mm 1 groove / 1 mm² / AWG 18 / 7.5 mm 2 grooves / 1.5 mm² / AWG 16 / 7.5 mm 3 grooves / 2.5 mm² / AWG 14 / 7.5 mm wide groove / 3 mm² / AWG 12 / 7.5 mm no groove / 4 mm² / AWG 12 / 7.5 mm * on the back crimp collar

Features

- Standard module for signal up to 10 A

Derating

Current carrying capacity

The current carrying capacity of the connectors is limited by the thermal load capability of the contact element material including the connections and the insulating parts. The derating curve is therefore valid for currents which flow constantly (non-intermittent) through each contact element of the connector evenly, without exceeding the allowed maximum temperature.

Measuring and testing techniques acc. to IEC 60512-5-2

Crimp terminal

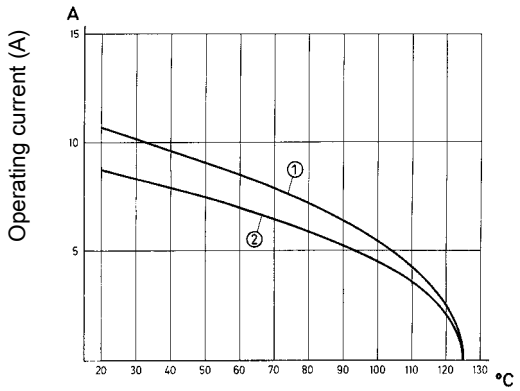

Ambient temperature (C°)

① 24 B hoods/housings with 6 modules Wire cross section 1.5 mm²
② 24 B hoods/housings with 6 modules Wire cross section 1 mm²

Technical characteristics

Contacts	12
Electrical data acc. to IEC 61984	**10 A 250 V 4 kV 3**
Rated current	10 A
Rated voltage	250 V
Rated impulse voltage	4 kV
Pollution degree	3
Rated voltage acc. to UL	600 V
Insulation resistance	≥10^{10} Ohm
Limiting temperatures	-40 °C ... 125 °C
Flammability (insert) acc. to UL 94	V 0
Mating cycles	≥500
Mating cycles with HMC contacts	≥10000
Material (insert)	polycarbonate
Colour (insert)	RAL 7032 (light grey)
Material (contact)	copper alloy

Specifications and approvals

IEC 60664-1
IEC 61984

Details

Crimping tools see chapter 90

Remarks on the crimp technique

The wire gauges mentioned in the catalogue refer to geometric wire gauges of cables.

Designed for 10,000 mating cycles (only with Han D® HMC crimp contacts and with Han-Modular® Docking frame)

Number of contacts

12+ ⏚

250 V
10 A

Identification	Wire cross section (mm²)	Part number male	Part number female	Drawing Dimensions in mm
Han-Modular®, Han DD® module, Crimp terminal Please order crimp contacts separately.		09 14 012 3001	09 14 012 3101	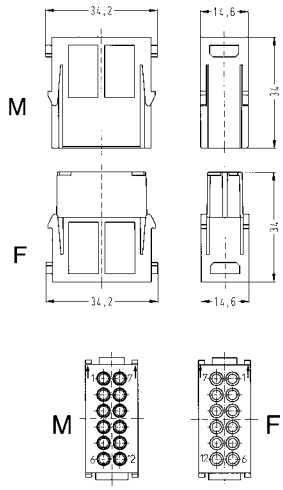 Contact arrangement (view from termination side)
Han D® HMC, Crimp contact, HMC gold plated contacts, contact resistance ≤3 mOhm 	0.14 – 0.37 0.5 0.75 1 1.5 2.5	09 15 200 6124 09 15 200 6123 09 15 200 6125 09 15 200 6122 09 15 200 6121 09 15 200 6126	09 15 200 6224 09 15 200 6223 09 15 200 6225 09 15 200 6222 09 15 200 6221 09 15 200 6226	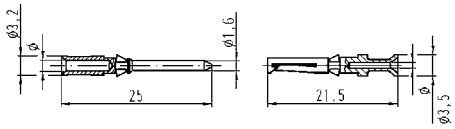

Wire gauge		⌀	Stripping length
0.14-0.37 mm²	AWG 26-22	0.9 mm	8 mm
0.5 mm²	AWG 20	1.1 mm	8 mm
0.75 mm²	AWG 18	1.3 mm	8 mm
1 mm²	AWG 18	1.45 mm	8 mm
1.5 mm²	AWG 16	1.75 mm	8 mm
2.5 mm²	AWG 14	2.25 mm	6 mm

Features

- Suitable for Han D® crimp contacts
- High contact density

Derating

Current carrying capacity

The current carrying capacity of the connectors is limited by the thermal load capability of the contact element material including the connections and the insulating parts. The derating curve is therefore valid for currents which flow constantly (non-intermittent) through each contact element of the connector evenly, without exceeding the allowed maximum temperature.

Measuring and testing techniques acc. to IEC 60512-5-2

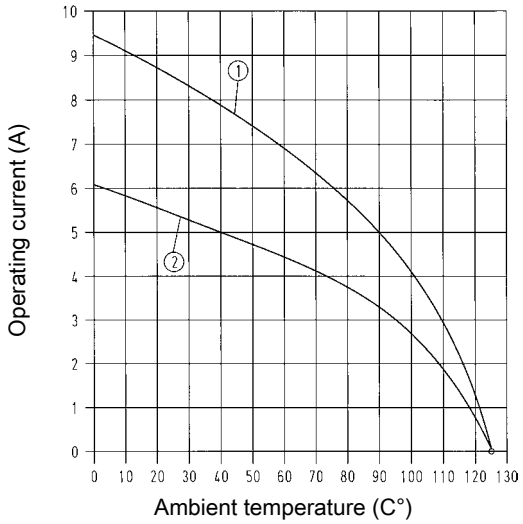

① 24 B hoods/housings with 6 modules Wire cross section 1.5 mm²
② 24 B hoods/housings with 6 modules Wire cross section 1 mm²

Technical characteristics

Contacts	17
Electrical data acc. to IEC 61984	**10 A 160 V 2.5 kV 3**
Rated current	10 A
Rated voltage	160 V
Rated impulse voltage	2.5 kV
Pollution degree	3
Rated voltage acc. to UL	250 V
Insulation resistance	≥10^{10} Ohm
Limiting temperatures	-40 °C ... 125 °C
Flammability (insert) acc. to UL 94	V 0
Mating cycles	≥500
Mating cycles with HMC contacts	≥10000
Material (insert)	polycarbonate
Colour (insert)	RAL 7032 (light grey)
Material (contact)	copper alloy

Specifications and approvals

IEC 60664-1
IEC 61984

Details

Crimping tools see chapter 90

Remarks on the crimp technique

The wire gauges mentioned in the catalogue refer to geometric wire gauges of cables.

Designed for 10,000 mating cycles (only with Han D® HMC crimp contacts and with Han-Modular® Docking frame)

Number of contacts

17

160 V
10 A

Identification	Wire cross section (mm²)	Part number male	Part number female	Drawing Dimensions in mm
Han-Modular®, Han® DDD module, Crimp terminal 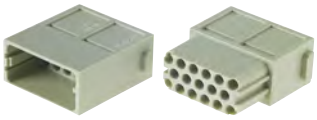 Please order crimp contacts separately.		09 14 017 3001	09 14 017 3101	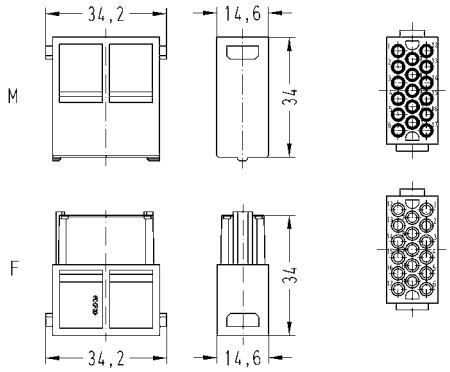 Contact arrangement (view from termination side)
Han D® HMC, Crimp contact, HMC gold plated contacts, contact resistance ≤3 mOhm 	0.14 – 0.37 0.5 0.75 1 1.5 2.5	09 15 200 6124 09 15 200 6123 09 15 200 6125 09 15 200 6122 09 15 200 6121 09 15 200 6126	09 15 200 6224 09 15 200 6223 09 15 200 6225 09 15 200 6222 09 15 200 6221 09 15 200 6226	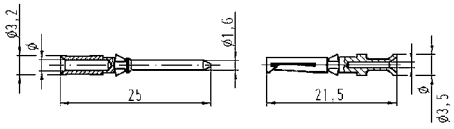

Wire gauge		⌀	Stripping length
0.14-0.37 mm²	AWG 26-22	0.9 mm	8 mm
0.5 mm²	AWG 20	1.1 mm	8 mm
0.75 mm²	AWG 18	1.3 mm	8 mm
1 mm²	AWG 18	1.45 mm	8 mm
1.5 mm²	AWG 16	1.75 mm	8 mm
2.5 mm²	AWG 14	2.25 mm	6 mm

Features

- Hoods/Housings, metal
- Locking levers: Han-Easy Lock® with special locking reel
- **Field of application:** for excellent mechanical and electrical protection in demanding environments, for example, in the automobile and mechanical engineering industries also for process and regulation control applications
- **Distinguishing feature:** hoods/housings colour-coded grey (RAL 7037)

Technical characteristics

Limiting temperatures	-40 °C ... 125 °C
Mating cycles	≥10000
Flammability (locking lever) acc. to UL 94	V 0
Protection class acc. to UL 50	NEMA type 4/4X/12
Degree of protection acc. to IEC 60529	IP65
Material (hoods/housings)	aluminium
Surface (hoods/housings)	powder-coated
Colour (hoods/housings)	RAL 7037 (grey)
Material (locking lever)	polycarbonate + stainless steel
Colour (locking lever)	RAL 7037 (grey)
Material (seal)	NBR

Specifications and approvals

GL

Metal hoods/housings for industrial applications
single locking lever

Identification	Cable entry	Part number Low construction	Part number High construction	Drawing Dimensions in mm
Han® B HMC, Hoods, top entry	1xM20 1xM25 1xM32	19 30 210 1440 19 30 210 1441	19 30 210 0447	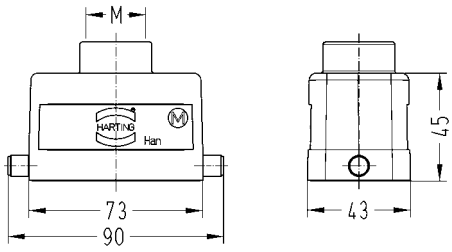 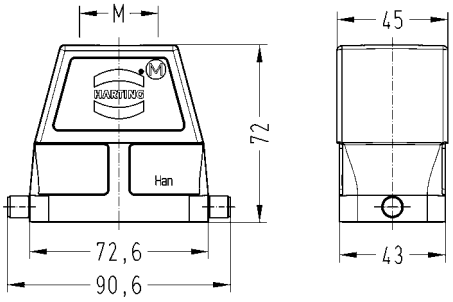
Han® B HMC, Hoods, side entry	1xM20 1xM25 1xM32	19 30 210 1540 19 30 210 1541	19 30 210 0547	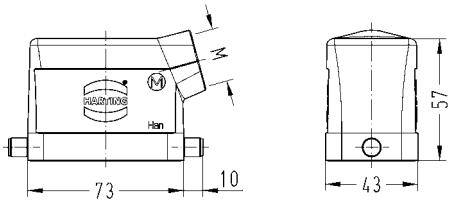 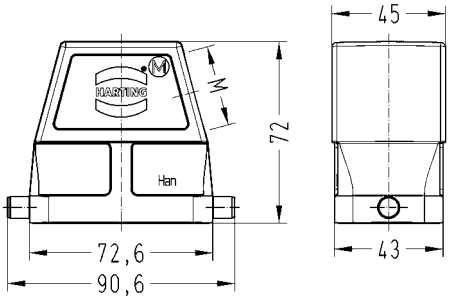

Han HMC

Identification	Cable entry	Part number Low construction	Part number High construction	Drawing Dimensions in mm
Han® B HMC, Hoods, without cable entry 	–		09 30 210 0803	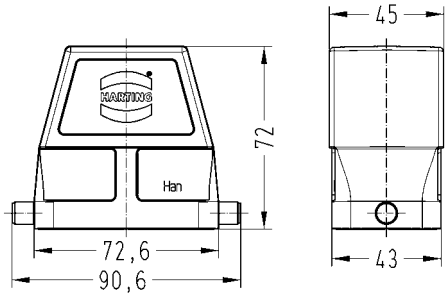
Han® B HMC, Bulkhead mounted housings, Han-Easy Lock® 	–	09 30 210 0305		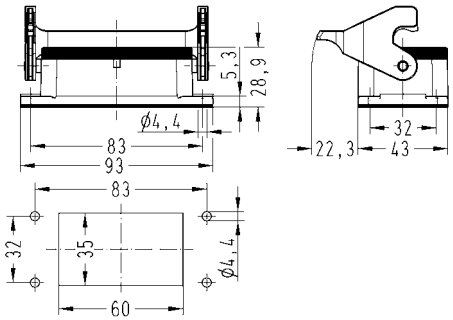 Panel cut out
Han® B HMC, Surface mounted housings, side entry, Han-Easy Lock® 	1xM20 2xM20 2xM25 2xM32	19 30 210 1250 19 30 210 1290	19 30 210 0291 19 30 210 0292	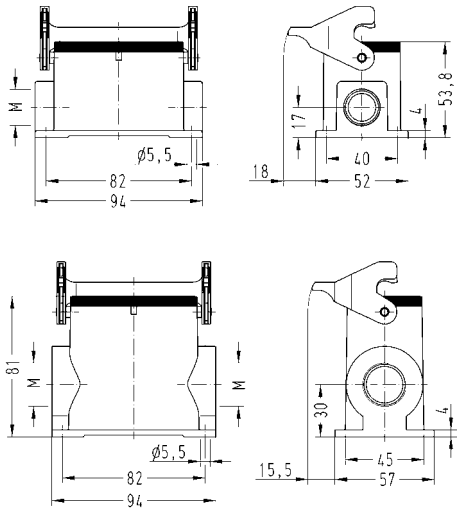

Han HMC

Identification	Cable entry	Part number Low construction	Part number High construction	Drawing Dimensions in mm
Han® B HMC, Cable to cable housings, top entry, Han-Easy Lock®	1xM20 1xM25	19 30 210 1750	19 30 210 0756	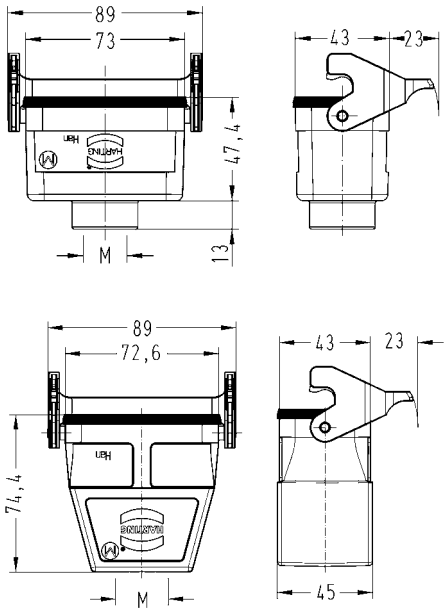

Metal hoods/housings for industrial applications
single locking lever

Identification	Cable entry	Part number Low construction	Part number High construction	Drawing Dimensions in mm
Han® B HMC, Hoods, top entry 	1xM25 1xM32 1xM40	19 30 216 1441 19 30 216 1442	19 30 216 0447 19 30 216 0448	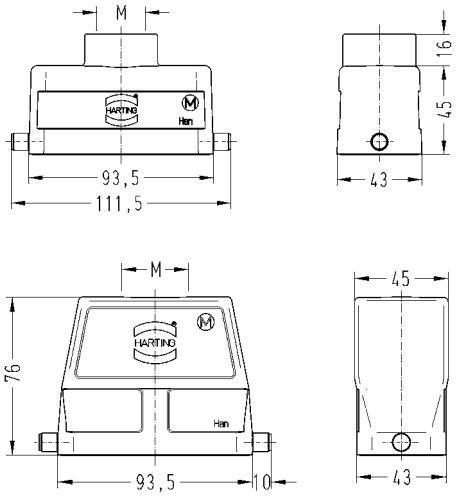
Han® B HMC, Hoods, side entry 	1xM25 1xM32 1xM40	19 30 216 1541 19 30 216 1542	19 30 216 0547 19 30 216 0548	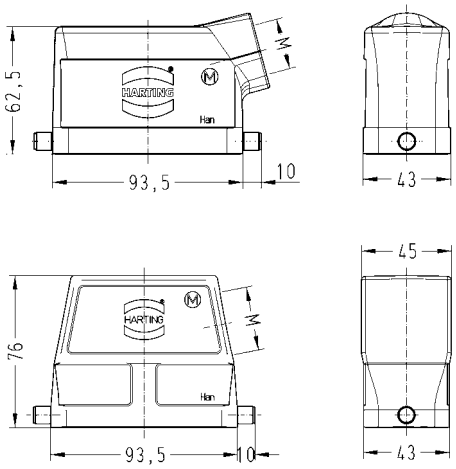
Han® B HMC, Hoods, without cable entry 	–		09 30 216 0803	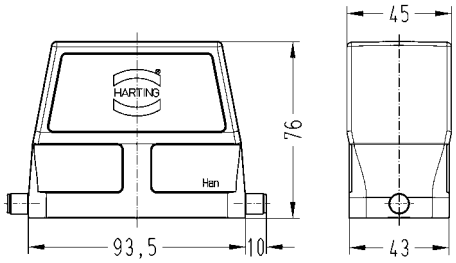

Identification	Cable entry	Part number Low construction	Part number High construction	Drawing Dimensions in mm
Han® B HMC, Bulkhead mounted housings, Han-Easy Lock®		09 30 216 0307		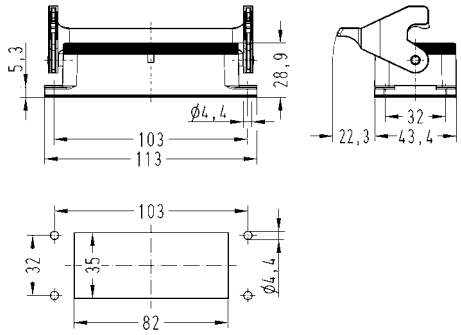 Panel cut out
Han® B HMC, Surface mounted housings, side entry, Han-Easy Lock® 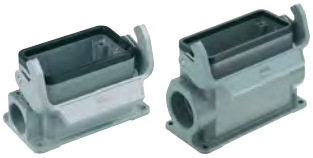	1xM25 1xM32 2xM25 2xM32	19 30 216 1251 19 30 216 1291	19 30 216 0252 19 30 216 0291 19 30 216 0292	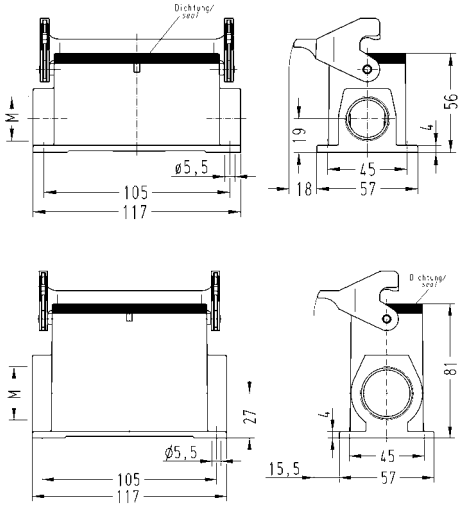
Han® B HMC, Cable to cable housings, top entry, Han-Easy Lock®	1xM25 1xM32	19 30 216 1751 19 30 216 1752	19 30 216 0757	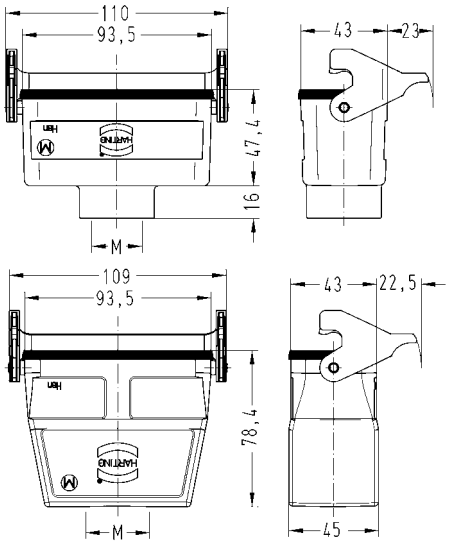

Han HMC

Metal hoods/housings for industrial applications
single locking lever

Identification	Cable entry	Part number Low construction	Part number High construction	Drawing Dimensions in mm
Han® B HMC, Hoods, top entry	1xM32 1xM40	19 30 224 1442	19 30 224 0447 19 30 224 0448	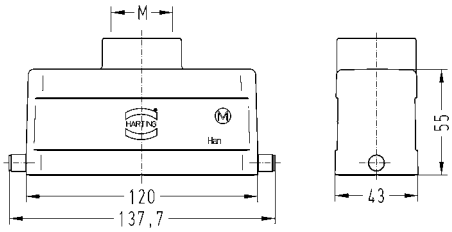 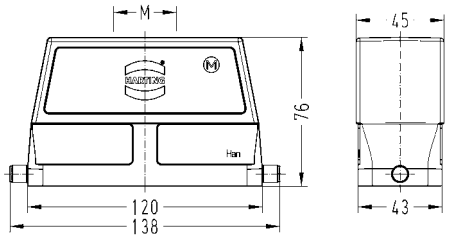
Han® B HMC, Hoods, side entry	1xM25 1xM32 1xM40	19 30 224 1541 19 30 224 1542	19 30 224 0547 19 30 224 0548	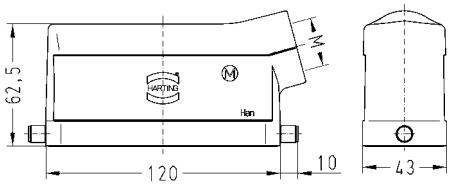 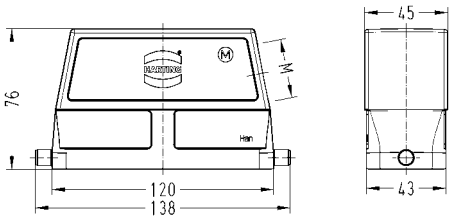
Han® B HMC, Hoods, without cable entry	–		09 30 224 0803	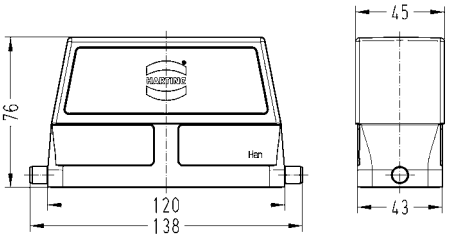

Han HMC

Identification	Cable entry	Part number Low construction	Part number High construction	Drawing Dimensions in mm
Han® B HMC, Bulkhead mounted housings, Han-Easy Lock® 		09 30 224 0307		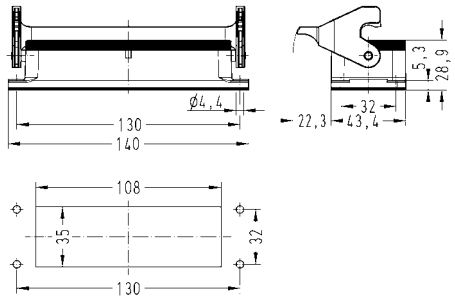 Panel cut out
Han® B HMC, Surface mounted housings, side entry, Han-Easy Lock® 	1xM25 2xM25 2xM32	19 30 224 1251 19 30 224 1291	19 30 224 0292	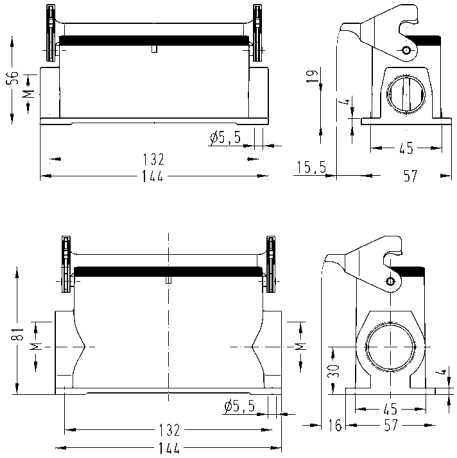
Han® B HMC, Cable to cable housings, top entry, Han-Easy Lock® 	1xM32	19 30 224 1752	19 30 224 0757	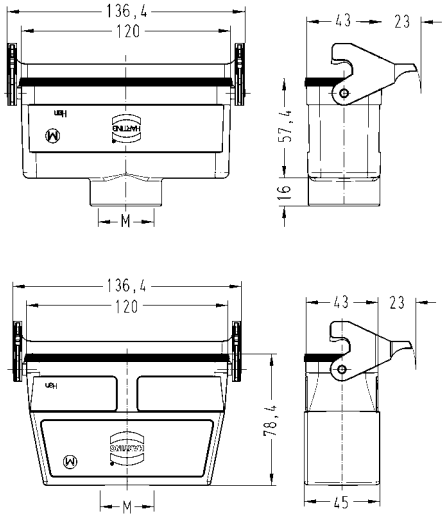

Han HMC

Features

- Suitable for all inserts of the series Han E®, Han E® HMC, Han EE®, Han EE® HMC, Han EEE®, Han EEE® HMC, Han® ES, Han D® (size B), Han D® HMC, Han DD®, Han DD® HMC, Han-Com®, Han® HsB, Han-Modular®
- Ideal for applications in the field of transportation, as well as in the printing industry
- Due to the floating system of the docking frame the PE connection of the mounting base has to be installed separately
- Inserts are protected against mechanical damage

Technical characteristics

Mating cycles	≥500
Mating cycles with HMC connectors	≥10000
Material (hoods/housings)	stainless steel
Material (screwing)	zinc die-cast

Docking frame

Identification	Size	Part number	Drawing Dimensions in mm
Docking frame Range of delivery: 1 frame, 4 cheese head shoulder screws to fix the docking frame pull-in-range x-axis: ± 1.5 mm pull-in-range y-axis: ± 1.5 mm	6 B 10 B 16 B 24 B	09 30 006 1701 09 30 010 1701 09 30 016 1701 09 30 024 1701	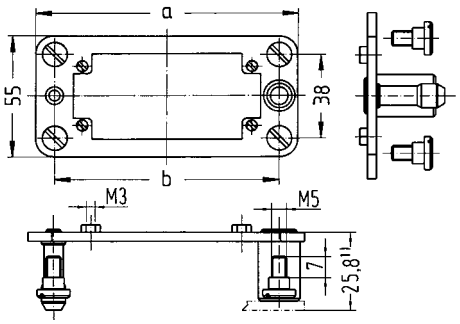 Distance for electrical and F.O. contacts max. 27 mm; for pneumatic contacts max. 26.5 mm 6 B: a=86; b=69 10 B: a=99; b=82 16 B: a= 119.5 ; b= 102.5 24 B: a=146; b=129 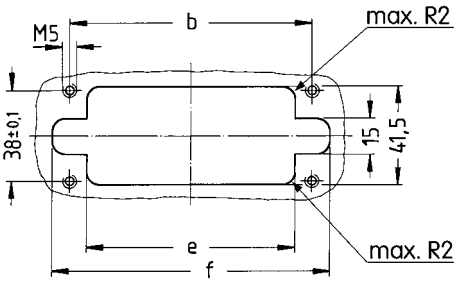 6 B: b= 69; e= 54.5; f= 84 10 B: b= 82; e= 67.5; f= 97 16 B: b= 102.5; e= 88; f= 117.5 24 B: b= 129; e= 114.5; f= 144

Contents | Page

Han® High Temp inserts **17.3**

Han® High Temp contacts **17.8**

Han® High Temp hoods/housings **17.9**

Description

Han® High Temp is a new product series that is based on our well-established Han® B and Han® E series. We used high-quality materials with wide temperature ranges to produce connectors that are uniquely suited for a wide variety of applications.

These connectors can withstand temperatures up to 200 °C – so they can be used directly in machines and facilities that would otherwise require cumbersome and complex constructions.

For our users, this delivers direct advantages:

- The electro-mechanical design process is optimized.
  Machine parts which are exposed to high temperatures can be designed modularly.
- The work process is optimized
  since lower wiring complexity results in reduced maintenance costs.
- The after-sales phase is optimized
  because this more service-friendly approach results in less outages and down times.

Design overview

The basic structure of the Han® High Temp connector consists of a bulkhead mounted housing and a cable-side hood.

Hoods and housings:
The aluminium die-cast hoods and housings feature a highly compressed surface with excellent non-stick properties. It also has a special non-stick coating on the bulkhead-side seal which allows easy handling without sticking.

Inserts:
The Han® High Temp series features very rugged contact inserts, which are really the heart of any connector. The LCP injection-moulded insert in combination with temperature resistant ground terminal delivers outstanding temperature resistance coupled with excellent mechanical stability.

Contacts:
Our new temperature resistant contacts, for either screw or crimp terminations, ensure reliable connections with minimal contact resistance even at extreme temperatures.

Han® High Temp connectors
remain robust and reliable for their entire lifespan!

Features

- Reliable also at extreme temperatures up to 200 °C
- All piece parts (contacts, insert material, hoods and housings, seals and grounding elements) are designed in a temperature resistant way
- Developed on the basis of the proven Han® E series

Derating

Current carrying capacity

The current carrying capacity of the connectors is limited by the thermal load capability of the contact element material including the connections and the insulating parts. The derating curve is therefore valid for currents which flow constantly (non-intermittent) through each contact element of the connector evenly, without exceeding the allowed maximum temperature.

Measuring and testing techniques acc. to IEC 60512-5-2

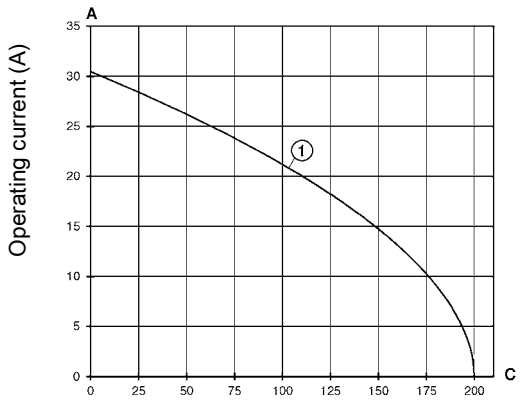

Ambient temperature (C°)

① Wire cross section 2.5 mm²

Technical characteristics

Contacts	6, 10, 16, 24
Electrical data acc. to IEC 61984	**16 A 400 V 6 kV 3**
Rated current	16 A
Rated voltage	400 V
Rated impulse voltage	6 kV
Pollution degree	3
Insulation resistance	≥10^{10} Ohm
Limiting temperatures with High Temp components	-40 °C ... 200 °C
Flammability (insert) acc. to UL 94	V 0
Mating cycles	≥500
Tightening torque	0.5 Nm
Material (insert)	LCP
Colour (insert)	RAL 7032 (light grey)

Specifications and approvals

IEC 60664-1
IEC 61984

Details

Han® High Temp crimp inserts are only for use with the special Han® High Temp crimp contacts.

Number of contacts

6+ ⏚

400 V
16 A

Identification	Wire cross section (mm²)	Part number male	Part number female	Drawing Dimensions in mm
Han® High Temp, Crimp terminal 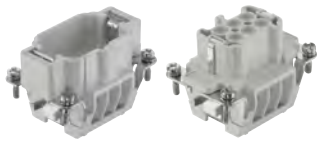 Please order crimp contacts separately.		09 33 806 2602	09 33 806 2702	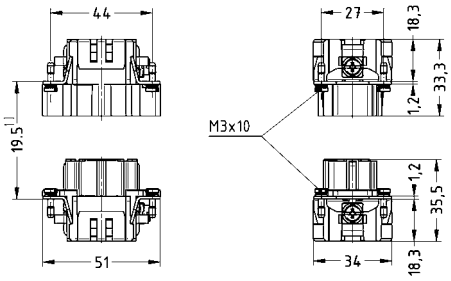 1) Distance for contact max. 21 mm
Han® High Temp, Screw terminal, with wire protection 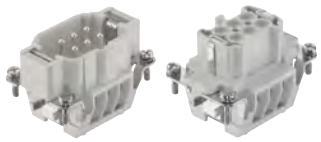	0.5 – 2.5	09 33 806 2601	09 33 806 2701	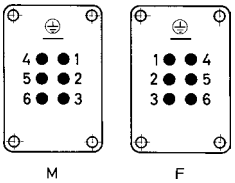 Contact arrangement (view from termination side) 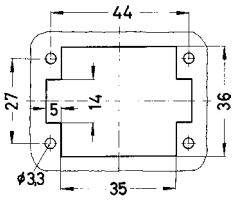 Panel cut out

High Temp

Number of contacts

10+ ⏚

400 V
16 A

Identification	Wire cross section (mm²)	Part number male	Part number female	Drawing Dimensions in mm
Han® High Temp, Crimp terminal Please order crimp contacts separately.		09 33 810 2602	09 33 810 2702	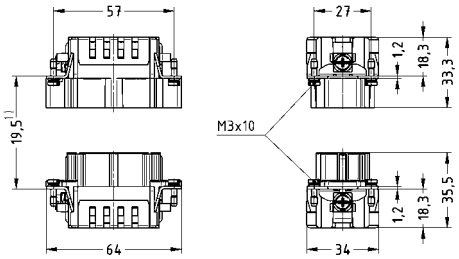 1) Distance for contact max. 21 mm
Han® High Temp, Screw terminal, with wire protection	0.5 – 2.5	09 33 810 2601	09 33 810 2701	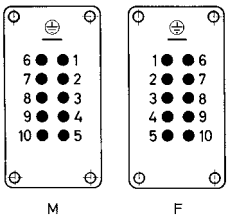 Contact arrangement (view from termination side) 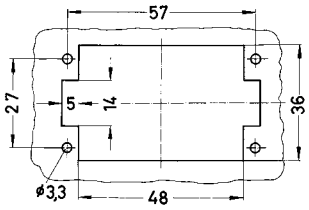 Panel cut out

High Temp

Number of contacts

16+ ⏚

400 V
16 A

Identification	Wire cross section (mm²)	Part number male	Part number female	Drawing Dimensions in mm
Han® High Temp, Crimp terminal 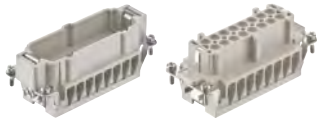 Please order crimp contacts separately.		09 33 816 2602	09 33 816 2702	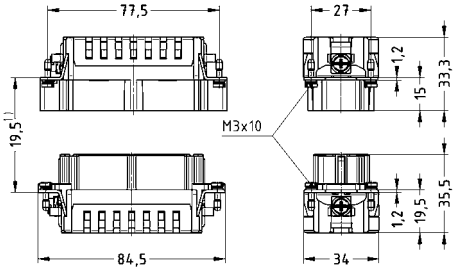 1) Distance for contact max. 21 mm
Han® High Temp, Screw terminal, with wire protection 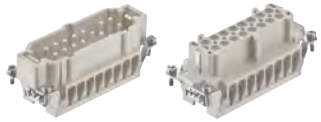	0.5 – 2.5	09 33 816 2601	09 33 816 2701	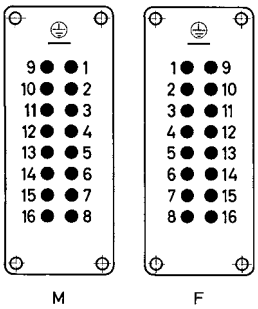 Contact arrangement (view from termination side) 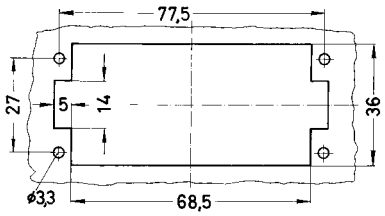 Panel cut out

High Temp

Number of contacts

24+ ⏚

400 V
16 A

Identification	Wire cross section (mm²)	Part number male	Part number female	Drawing Dimensions in mm
Han® High Temp, Crimp terminal Please order crimp contacts separately.		09 33 824 2602	09 33 824 2702	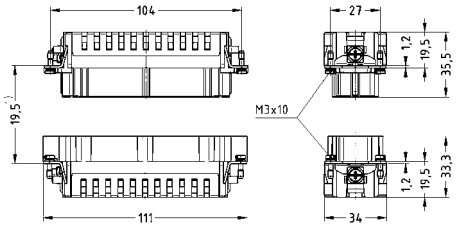 1) Distance for contact max. 21 mm
Han® High Temp, Screw terminal, with wire protection	0.5 – 2.5	09 33 824 2601	09 33 824 2701	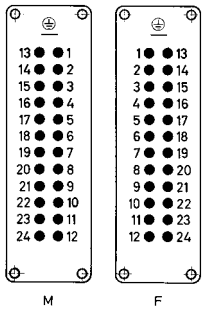 Contact arrangement (view from termination side) 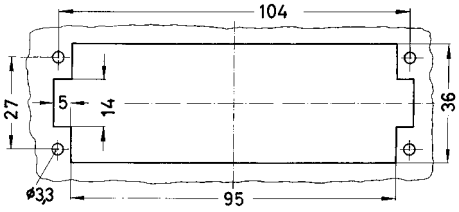 Panel cut out

High Temp

Technical characteristics

Limiting temperatures with High Temp components	-40 °C ... 200 °C
Material (contact)	copper alloy

Details

Crimping tools see chapter 90

Remarks on the crimp technique

The wire gauges mentioned in the catalogue refer to geometric wire gauges of cables.

Identification	Wire cross section (mm²)	Part number male	Part number female	Drawing Dimensions in mm
Crimp contact, silver plated contacts, contact resistance ≤1 mOhm	0.5	09 33 800 6121	09 33 800 6220	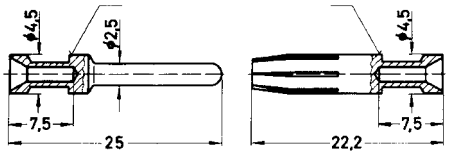
	0.75	09 33 800 6114	09 33 800 6214	
	1	09 33 800 6105	09 33 800 6205	
	1.5	09 33 800 6104	09 33 800 6204	
	2.5	09 33 800 6102	09 33 800 6202	

Identification	Wire gauge		Stripping length
no groove	0.14-0.37 mm²	AWG 26-22	7.5 mm
no groove	0.5 mm²	AWG 20	7.5 mm
1 groove*	0.75 mm²	AWG 18	7.5 mm
1 groove	1 mm²	AWG 18	7.5 mm
2 grooves	1.5 mm²	AWG 16	7.5 mm
3 grooves	2.5 mm²	AWG 14	7.5 mm
wide groove	3 mm²	AWG 12	7.5 mm
no groove	4 mm²	AWG 12	7.5 mm

* on the back crimp collar

Features

- Reliable also at extreme temperatures up to 200 °C
- All piece parts (contacts, insert material, hoods and housings, seals and grounding elements) are designed in a temperature resistant way
- Hoods/Housings, corrosion resistant metal
- Electrically conductive surface

Technical characteristics

Limiting temperatures	-40 °C ... 125 °C
Limiting temperatures with High Temp components	-40 °C ... 200 °C
Protection class acc. to UL 50	NEMA type 4/4X/12
Degree of protection acc. to IEC 60529	IP65
Material (hoods/housings)	aluminium
Surface (hoods/housings)	unpainted
Material (locking lever)	stainless steel
Material (seal)	FPM (red)

Specifications and approvals

GL

single locking lever

Identification	Cable entry	Part number Low construction	Part number High construction	Drawing Dimensions in mm
Han® EMC/B, Han® High Temp, Hoods, top entry 	1xM20 1xM25 1xM32	19 62 806 1440	19 62 806 0446 19 62 806 0447	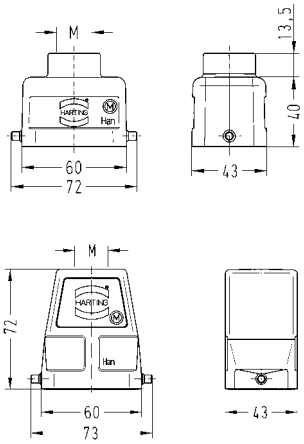
Han® EMC/B, Han® High Temp, Hoods, side entry 	1xM20 1xM25 1xM32	19 62 806 1540	19 62 806 0546 19 62 806 0547	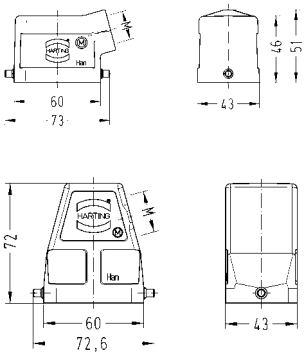
Han® High Temp, Bulkhead mounted housings 		09 62 806 0391		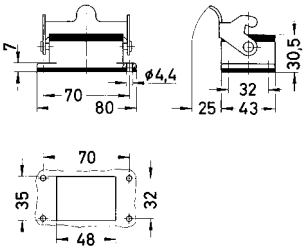 Panel cut out

High Temp

double locking lever

Identification	Cable entry	Part number Low construction	Part number High construction	Drawing Dimensions in mm
Han® EMC/B, Han® High Temp, Hoods, top entry 	1xM20 1xM25 1xM32	19 62 810 1420 19 62 810 1421	19 62 810 0426 19 62 810 0427	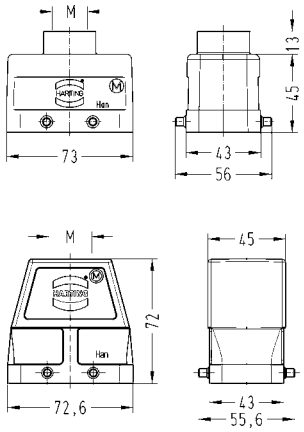
Han® EMC/B, Han® High Temp, Hoods, side entry 	1xM20 1xM25 1xM32	19 62 810 1520	19 62 810 0526 19 62 810 0527	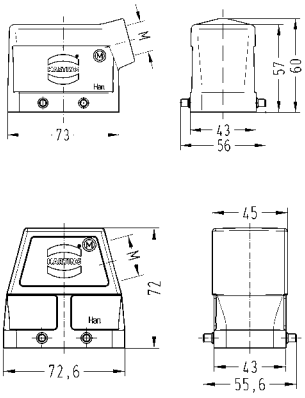
Han® High Temp, Bulkhead mounted housings 		09 62 810 0391		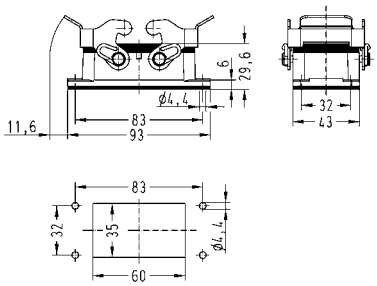 Panel cut out

High Temp

double locking lever

Identification	Cable entry	Part number Low construction	Part number High construction	Drawing Dimensions in mm
Han® EMC/B, Han® High Temp, Hoods, top entry 	1xM25 1xM32	19 62 816 1421	19 62 816 0427	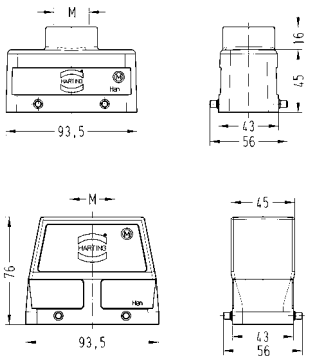
Han® EMC/B, Han® High Temp, Hoods, side entry 	1xM25 1xM32	19 62 816 1521	19 62 816 0527	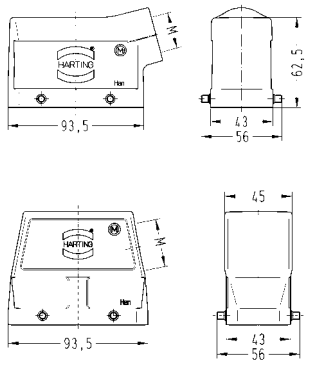
Han® High Temp, Bulkhead mounted housings 		09 62 816 0391		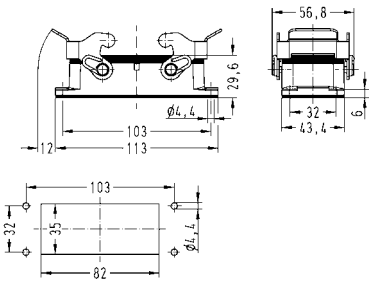 Panel cut out

High Temp

double locking lever

Identification	Cable entry	Part number Low construction	Part number High construction	Drawing Dimensions in mm
Han® EMC/B, Han® High Temp, Hoods, top entry 	1xM32	19 62 824 1422	19 62 824 0427	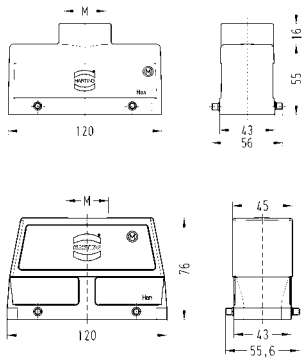
Han® EMC/B, Han® High Temp, Hoods, side entry 	1xM25 1xM32 1xM40	19 62 824 1521	19 62 824 0527 19 62 824 0528	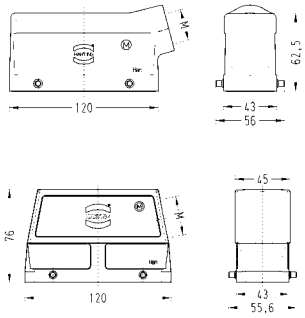
Han® High Temp, Bulkhead mounted housings 		09 62 824 0391		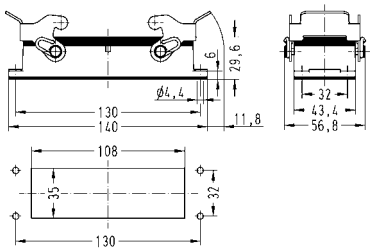 Panel cut out

High Temp

Contents | Page

Han-Brid® Cu	**19.6**
Han-Brid® F.O.	**19.10**
Han-Brid® Quintax 3 A	**19.13**
Han-Brid® Quintax 3 A with Han-Quintax® contacts	**19.15**
Han-Brid® Quintax 3 A with Han-Quintax® HD contacts	**19.16**
Han-Brid® Quintax 3 A with coaxial contacts	**19.17**
Han-Brid® RJ45 C	**19.19**
Han-Brid® USB	**19.22**
Han-Brid® FireWire	**19.23**
Han® 4 A SC	**19.24**
Hoods/Housings, metal Han® 3 A	**19.26**
Hoods/Housings, thermoplastic Han® 3 A	**19.30**
Han® M hoods/housings	**19.35**
Han® EMC hoods/housings	**19.38**
Han-INOX® hoods/housings	**19.41**
Han® HPR hoods/housings	**19.44**

Features

General Description

The Han-Brid® series allows the connection of a data interface and a power supply in a single space saving connector. This means that it is now possible to provide data transmission and power to devices in a single bus structure. This hybrid connector family includes provision for connection of a max. 50 V, 10 A power supply together with a range of inserts for connection of a variety of data protocols and transmission medias:

- Han-Brid® F.O. for plastic (POF) or for HCS®* optical fibre
- Han-Brid® Cu for shielded twisted pair
- Han-Brid® Quintax 3 A for Coax cable with large diameter
- Han-Brid® Quintax 3 A for shielded 4 or 8 wire bus systems (2 pair STP)
- Han-Brid® RJ45 C for Ethernet application
- Han-Brid® USB / Firewire for fast data transmission

Han-Brid® inserts fit into the standard plastic as well as metal hoods and housings with seal of the Han® 3 A series offering a degree of protection IP 65 according to DIN EN 60 529. For harsher environments Han® 3 HPR hoods and housings with a degree of protection of IP 68 can be used.

Power supply

- Han D® male and female with standard crimp contacts (Order crimp contacts separately)
- Rated current 10 A
- Rated voltage 50 V
- termination side 0.14 - 2.5 mm²
- Approval

Data interfaces

Han-Brid® F.O.
- Is suitable for all HP Versatile Link (Horizontal Package) transmitters and receivers
- Data rates: Standard 12 Mbit/s, suitable for all common fieldbus systems
- Insert allows integration of HP standard contacts for POF and HCS®* fibres
- Temperature range -40 °C ... +70 °C

Han-Brid® Cu
- For termination of a shielded twisted pair
- Insert for 2x Han D® male or female contacts
- Connection of the shield by means of shielding plate and fixing clamps
- Connection of the device side can be realized either by a printed circuit board as a modular version or as part of the appliance PCB
- Insert for bulkhead mounted housing or the coupling housing are always equipped with a screening spring

Bus Terminator
- Active bus terminator in male and female version
- Standard Han® 3 A hoods and housings
- Power supply to the termination network via electrical contacts of Han-Brid®
- Integrated, galvanically separated DC/DC converter 24 V / 5 V

Han-Brid® Quintax 3 A
- Possibility to terminate shielded four/eight wires conductors (2 pair STP)
- Possibility to terminate Coax cable with large diameter
- Suitable for all 4-wire bus systems
- Suitable for shielded cable conductor diameter 3 – 9.5 mm
- Transmission of shielding separately from the hood's ground
- Connections are carried out acc. to DIN EN 50 173, Cat. 5
- Temperature range -40 °C ... +70 °C

Han-Brid® RJ45 C
- Suitable for standard RJ 45 Plug and Jack, shielded version
- Connections provided for conductors acc. to DIN EN 50 173, Cat. 5
- Termination from the device side is carried out via a PCB, two versions are possible: modular version or as part of the appliance PCB
- Assembly with standard tools
- Insert for 2 Han-D® male or female contacts offers the combination with electrical bus connector
- Rated current 10 A
- Rated voltage 24 V
- termination side 0.14 - 2.5 mm²

Han-Brid® USB
- Insert for all Han® 3 A hoods and housings
- Hood with glued sealing
- Simple and low-cost termination via insert of a patch cable
- Strain-relief via cable tie

Han-Brid® FireWire
- Insert for all Han® 3 A hoods and housings
- Hood with glued sealing
- Simple and low-cost termination via insert of a patch cable
- Strain-relief via cable tie
- Compatible to IEEE 1394

Han® 4 A SC
- Suitable with housings, size Han® 3 A including versions Han® M, Han® EMV and Han® HPR
- Degree of protection up to IP 68
- For fibre optic SC contacts; up to 4 SC contacts per connector
- For 1 mm POF
- For Multimode fibre 50 - 62.5 / 125 µm and Single-mode fibre 9 / 125 µm
- Full ceramic sleeves for a minimal insertion loss

* HCS® = Hard Clad Silica (is registered trade mark of the SpecTran Corporation)

Overview (Sample: Han-Brid® Cu)

Thermoplastic
09 20 003 0320 (light grey)
09 20 003 0327 (black)

Metal
09 20 003 0301

EMC
09 62 003 0301

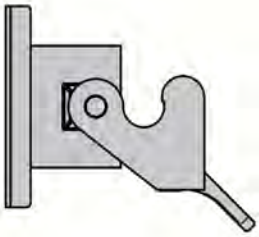

Device side
09 12 006 2611
09 12 006 2695
09 12 006 2694

Cable side
09 12 006 3111

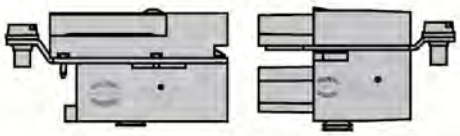

Thermoplastic
19 20 003 0423 (light grey)
19 20 003 0426 (black)

Metal
19 20 003 1443

EMC
19 62 003 1443

Thermoplastic
19 20 003 0720 (light grey)
19 20 003 0727 (black)

Metal
19 20 003 1750

EMC
19 62 003 1750

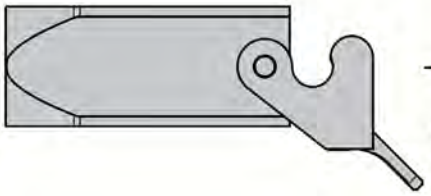

Device side
09 12 006 2701
09 12 006 2795
09 12 006 2794

Cable side
09 12 006 3001

Thermoplastic
19 20 003 0623 (light grey)
19 20 003 0627 (black)

Metal
19 20 003 1643

EMC
19 62 003 1643

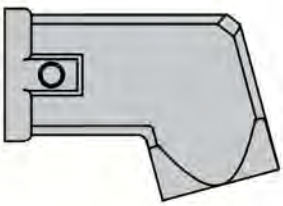

Thermoplastic
19 20 003 0220 (light grey)
19 20 003 0227 (black)

Metal
19 20 003 1250

EMC
19 62 003 1250

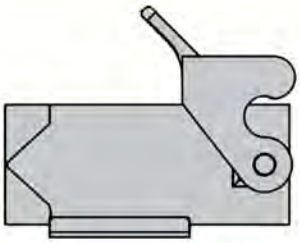

Overview (Sample: Han-Brid® RJ45 C)

Thermoplastic
09 20 003 0320 (light grey)
09 20 003 0327 (black)

Metal
09 20 003 0301

EMC
09 62 003 0301

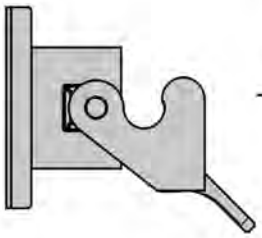

Device side
09 12 003 2770
09 12 003 2774
09 12 003 2776

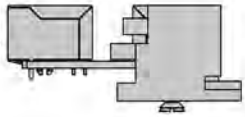

Cable side
09 12 003 3011
09 12 003 3021
09 12 003 3031

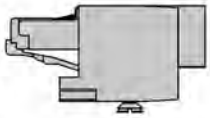

Thermoplastic
19 20 003 0423 (light grey)
19 20 003 0427 (black)

Metal
09 20 003 1443

EMC
19 62 003 1443

Thermoplastic
19 20 003 0623 (light grey)
19 20 003 0627 (black)

Metal
19 20 003 1643

EMC
19 62 003 1643

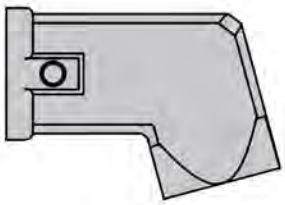

Features

- For termination of a shielded twisted pair
- Insert for 2x Han D® male or female contacts
- Connection of the shield by means of shielding plate and fixing clamps
- Connection of the device side can be realized either by a printed circuit board as a modular version or as part of the appliance PCB
- Insert for bulkhead mounted housing or the coupling housing are always equipped with a screening spring
- Active bus terminator in standard Han® 3 A hoods and housings
- Power supply to the termination network via electrical contacts of Han-Brid®
- Integrated, galvanically separated DC/DC converter 24 V / 5 V

Technical characteristics

Contacts	2, 6
Electrical data acc. to IEC 61984	**10 A 50 V 0.8 kV 3**
Rated current	10 A
Rated voltage	50 V
Rated impulse voltage	0.8 kV
Pollution degree	3
Insulation resistance	≥10^{10} Ohm
Limiting temperatures	-40 °C ... 125 °C
Flammability (insert) acc. to UL 94	V 0
Mating cycles	≥500
Material (insert)	polycarbonate
Colour (insert)	RAL 7032 (light grey)
Material (hoods/housings)	thermoplastic, metal

Specifications and approvals

IEC 61984

Number of contacts

2

50 V
10 A
+ 4 electrical contacts 10 A + option for PE

Identification	Part number male	Part number female	Drawing Dimensions in mm
Han-Brid®, Hybrid field bus connector, device side	09 12 006 2611		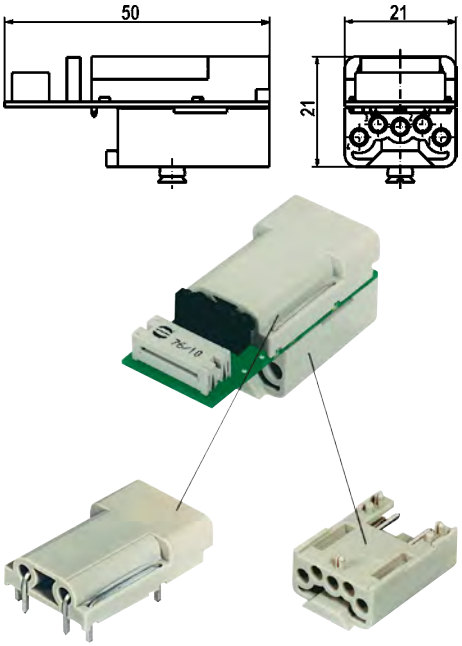 Also available as single parts: 09 12 002 2611 Upper part, loaded 09 12 002 3011 Upper part, unloaded 09 12 004 3011 Lower part, unloaded
Han-Brid®, Hybrid field bus connector, cable side		09 12 006 3111	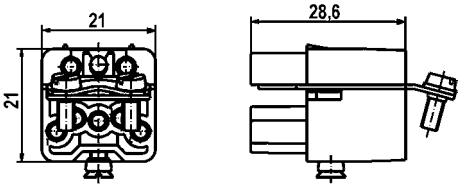 Contact arrangement (view from termination side)

Number of contacts

2

50 V
10 A
+ 4 electrical contacts 10 A + option for PE

Identification	Part number male	Part number female	Drawing Dimensions in mm
Han-Brid®, Hybrid field bus connector, cable side	09 12 006 3001		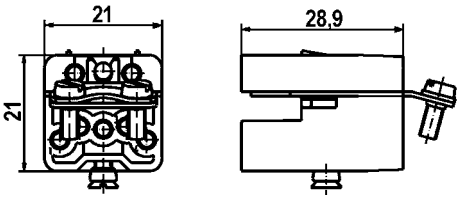
Han-Brid®, Hybrid field bus connector, device side		09 12 006 2701	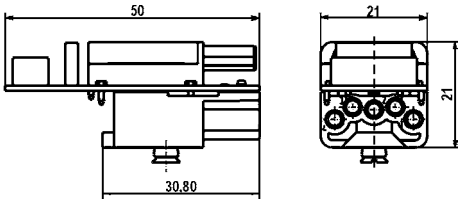 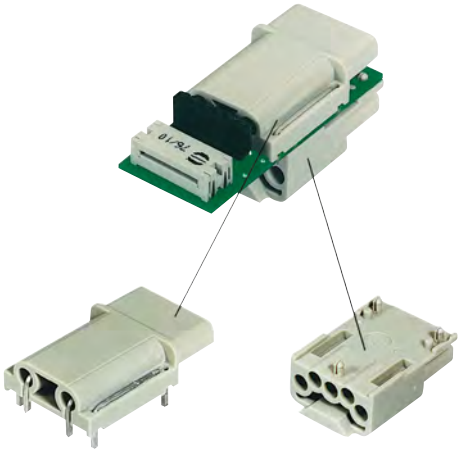 Also available as single parts: 09 12 002 2701 Upper part, loaded 09 12 002 3101 Upper part, unloaded 09 12 004 3101 Lower part, unloaded

Number of contacts

6

50 V
10 A
+ 4 electrical contacts 10 A + option for PE

Identification	Part number male	Part number female	Drawing Dimensions in mm
Han-Brid®, Bus terminator, Plastic hoods/housings	09 12 006 2691	09 12 006 2791	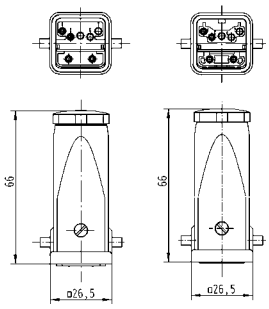
Han-Brid®, Bus terminator, Hoods/Housings, metal	09 12 006 2692	09 12 006 2792	
Han-Brid®, Panel feed through, with cage clamp	09 12 006 2695	09 12 006 2795	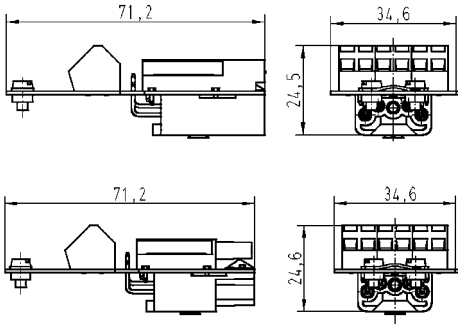
Han-Brid®, Coupling / Panel feed through	09 12 006 2694	09 12 006 2794	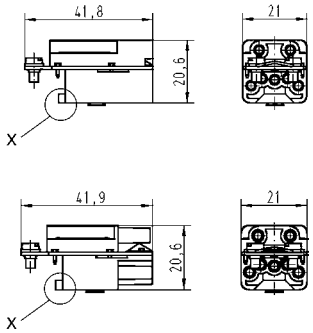 X= Cutting off the fin allows the use in cable to cable housings.

Features

- Is suitable for all HP Versatile Link (Horizontal Package) transmitters and receivers
- Data rates: Standard 12 Mbit/s, suitable for all common fieldbus systems
- Insert allows integration of HP standard contacts for POF and HCS® fibres

Technical characteristics

Contacts	2
Electrical data acc. to IEC 61984	**10 A 50 V 0.8 kV 3**
Rated current	10 A
Rated voltage	50 V
Rated impulse voltage	0.8 kV
Pollution degree	3
Insulation resistance	≥10^{10} Ohm
Limiting temperatures	-40 °C ... 70 °C
Flammability (insert) acc. to UL 94	V 0
Mating cycles	≥500
Material (insert)	polycarbonate
Colour (insert)	RAL 7032 (light grey)

Specifications and approvals

IEC 61984

Number of contacts

2

50 V
10 A
+ 4 electrical contacts 10 A + option for PE

Identification	Part number male	Part number female	Drawing Dimensions in mm
Han-Brid®, Hybrid field bus connector, device side, F.O. (f) + Han D® (m), with PCB	09 12 004 2611		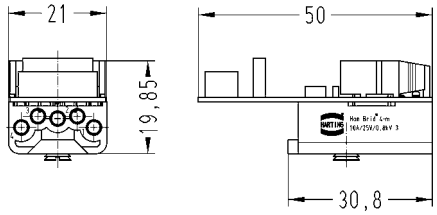 Contact arrangement (view from termination side) Also available as single parts: 09 12 004 3011 Lower part, unloaded
Han-Brid®, Hybrid field bus connector, cable side, F.O. (m) + Han D® (f), for POF		09 12 004 2711	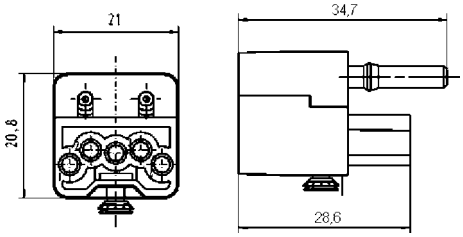 09 12 004 3111 unloaded
Han-Brid®, Hybrid field bus connector, cable side, F.O. (m) + Han D® (f), for POF crimpless		09 12 004 2713	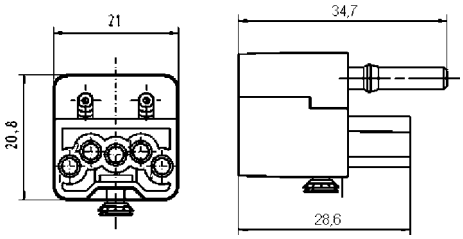 09 12 004 3113 unloaded
Han-Brid®, Hybrid field bus connector, cable side, F.O. (m) + Han D® (f), for HCS® fibre		09 12 004 2716	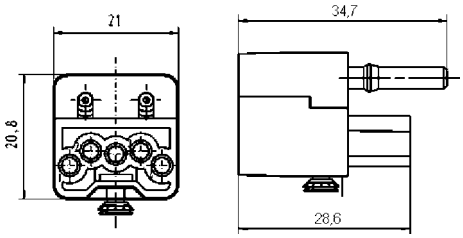 09 12 004 3116 unloaded

Number of contacts

2

50 V
10 A
+ 4 electrical contacts 10 A + option for PE

Identification	Part number male	Part number female	Drawing Dimensions in mm
Han-Brid®, Hybrid field bus connector, cable side, F.O. (m) + Han D® (m), for POF for POF	09 12 004 2601		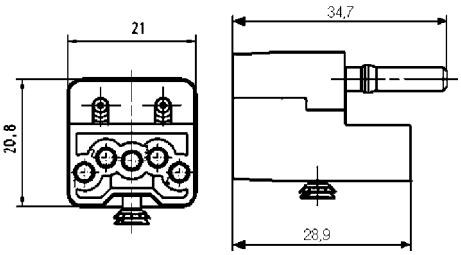 09 12 004 3001 unloaded
Han-Brid®, Hybrid field bus connector, cable side, with F.O. contacts, F.O. (m) + Han D® (m), for POF crimpless 	09 12 004 2603		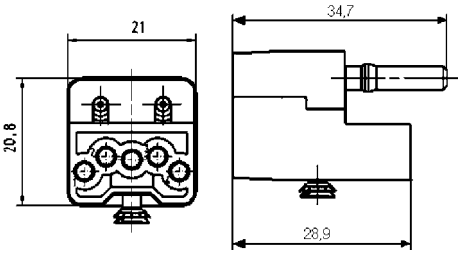 09 12 004 3003 unloaded
Han-Brid®, Hybrid field bus connector, cable side, F.O. (m) + Han D® (m), for HCS® fibre 	09 12 004 2606		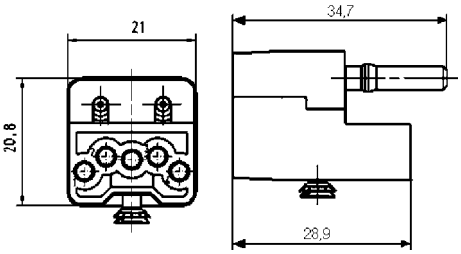 09 12 004 3006 unloaded
Han-Brid®, Hybrid field bus connector, device side, F.O. (f) + Han D® (f), with PCB 		09 12 004 2701	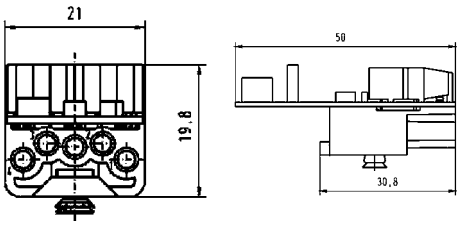 Also available as single parts: 09 12 004 3101 Lower part, unloaded

Features

- Possibility to terminate shielded four/eight wires conductors (2 pair STP)
- Possibility to terminate Coax cable with large diameter
- Suitable for all 4-wire bus systems
- Suitable for shielded cable conductor diameter 3 – 9.5 mm
- Transmission of shielding separately from the hood's ground
- Connections are carried out acc. to EN 50173, Cat. 5

Technical characteristics

Contacts	1
Insulation resistance	≥10^{10} Ohm
Flammability (insert) acc. to UL 94	V 0
Mating cycles	≥500
Material (insert)	polycarbonate
Colour (insert)	RAL 7032 (light grey)
Material (contact)	copper alloy

Specifications and approvals

IEC 61984
IEC 60664-1

Details

Crimping tools see chapter 90

Details

Remarks on the crimp technique

The wire gauges mentioned in the catalogue refer to geometric wire gauges of cables.

Assembly instructions

1.

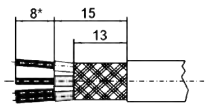

2.

3.

4.

5.

6.

1. Strip cable acc. to drawing 1 and fold the shielding over the cable.
2. Crimp Han D® contacts onto the wires.
3. Insert Han D® contacts into corresponding cavaties of insulator until they are snapped in.
4. Fit the insert including the cable into the opened shielded bushing. The coding pin of the shielded bushing has to meet the groove of the insulator.
5. Clamp the tilt over the shielding onto the cable by means of the special clamp (small opening for cable diameter of 3 - 6 mm, large opening for cable diameter of 6 - 9.5 mm).
6. Check the wiring. Close the shielded bushing with the cover and insert it into the corresponding cavity of the Quintax Module as usual.

Number of contacts

1

+ shielding + 2 power contacts

Identification	Wire cross section (mm²)	Part number male	Part number female	Drawing Dimensions in mm
Han-Brid®, Han-Quintax® insert, Crimp terminal 		09 15 003 3001	09 15 003 3101	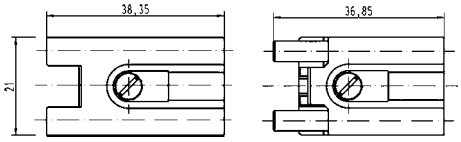
Han D®, Crimp contact, gold plated contacts, contact resistance ≤3 mOhm 	0.14 – 0.37 0.5 0.75 1 1.5 2.5	09 15 000 6124 09 15 000 6123 09 15 000 6125 09 15 000 6122 09 15 000 6121 09 15 000 6126	09 15 000 6224 09 15 000 6223 09 15 000 6225 09 15 000 6222 09 15 000 6221 09 15 000 6226	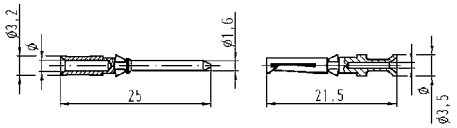

Wire gauge		Ø	Stripping length
0.14-0.37 mm²	AWG 26-22	0.9 mm	8 mm
0.5 mm²	AWG 20	1.1 mm	8 mm
0.75 mm²	AWG 18	1.3 mm	8 mm
1 mm²	AWG 18	1.45 mm	8 mm
1.5 mm²	AWG 16	1.75 mm	8 mm
2.5 mm²	AWG 14	2.25 mm	6 mm

Features

- Shielding bus separate from housing potential
- Suitable for the transmission of sensitive signals (e.g. bus signals)
- The four pole Han® Quintax contact is suitable for Ethernet Cat. 5e and PROFIBUS when diagonally wiring of the data pairs

Technical characteristics

Electrical data acc. to IEC 61984	**10 A 50 V 0.8 kV 3**
Rated current	10 A
Rated voltage	50 V
Rated impulse voltage	0.8 kV
Pollution degree	3
Limiting temperatures	-40 °C ... 85 °C
Flammability (insert) acc. to UL 94	V 0
Material (insert)	zinc alloy
Material (contact)	copper alloy

Specifications and approvals

IEC 60664-1
IEC 61984

Details

Crimping tools see chapter 90

Remarks on the crimp technique

The wire gauges mentioned in the catalogue refer to geometric wire gauges of cables.

Identification	Wire cross section (mm²)	Part number male	Part number female	Drawing Dimensions in mm
Han D®, Crimp contact, gold plated contacts, contact resistance ≤3 mOhm	0.14 – 0.37 0.5 0.75 1 1.5 2.5	09 15 000 6124 09 15 000 6123 09 15 000 6125 09 15 000 6122 09 15 000 6121 09 15 000 6126	09 15 000 6224 09 15 000 6223 09 15 000 6225 09 15 000 6222 09 15 000 6221 09 15 000 6226	
Han-Quintax® contact, 4 + shielding, for Han D® crimp contacts Please order crimp contacts separately.		09 15 004 3013	09 15 004 3113	

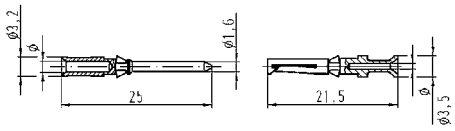

Wire gauge		ø	Stripping length
0.14-0.37 mm²	AWG 26-22	0.9 mm	8 mm
0.5 mm²	AWG 20	1.1 mm	8 mm
0.75 mm²	AWG 18	1.3 mm	8 mm
1 mm²	AWG 18	1.45 mm	8 mm
1.5 mm²	AWG 16	1.75 mm	8 mm
2.5 mm²	AWG 14	2.25 mm	6 mm

M

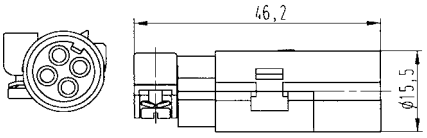

F

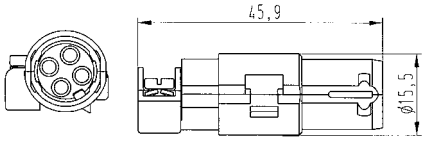

50 V
5 A

Technical characteristics

Electrical data acc. to IEC 61984	**5 A 50 V 0.8 kV 3**
Rated current	5 A
Rated voltage	50 V
Rated impulse voltage	0.8 kV
Pollution degree	3
Limiting temperatures	-40 °C ... 85 °C
Flammability (insert) acc. to UL 94	V 0

Technical characteristics

Material (insert)	polycarbonate

Specifications and approvals

IEC 61984
IEC 60664-1

Identification	Wire cross section (mm²)	Part number male	Part number female	Drawing Dimensions in mm
Han-Modular®, Han-Quintax® High Density contact, 8 + shielding, for Han® D-Sub contacts Please order contacts separate-ly.		09 15 008 3013	09 15 008 3113	M 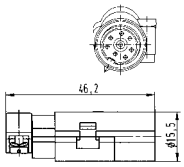 F 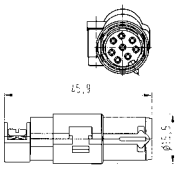
Han® D-Sub crimp contact, turned contacts	0.09 – 0.25 0.13 – 0.33 0.25 – 0.52	09 67 000 7576 09 67 000 5576 09 67 000 8576	09 67 000 7476 09 67 000 5476 09 67 000 8476	

Wire gauge	max. insulation diameter	Stripping length
0.09-0.25 mm²	1.7	4 mm
0.13-0.33 mm²	1.7	4 mm
0.25-0.52 mm²	1.7	4 mm

Technical characteristics

Electrical data acc. to IEC 61984	**10 A 50 V 0.8 kV 3**
Rated current	10 A
Rated voltage	50 V
Rated impulse voltage	0.8 kV
Pollution degree	3
Limiting temperatures	-40 °C ... 85 °C
Flammability (insert) acc. to UL 94	V 0
Material (insert)	zinc alloy
Material (contact)	copper alloy

Specifications and approvals

IEC 60664-1
IEC 61984

Details

Crimping tools see chapter 90

Remarks on the crimp technique

The wire gauges mentioned in the catalogue refer to geometric wire gauges of cables.

Identification	Wire cross section (mm²)	Part number male	Part number female	Drawing Dimensions in mm
Han D®, Crimp contact, gold plated contacts, contact resistance ≤3 mOhm	0.14 – 0.37 0.5 0.75 1 1.5 2.5	09 15 000 6124 09 15 000 6123 09 15 000 6125 09 15 000 6122 09 15 000 6121 09 15 000 6126	09 15 000 6224 09 15 000 6223 09 15 000 6225 09 15 000 6222 09 15 000 6221 09 15 000 6226	
Coaxial contact, 1 + shielding, for Han D® crimp contacts, 75 Ohm Please order crimp contacts separately.		09 15 001 3013	09 15 001 3113	

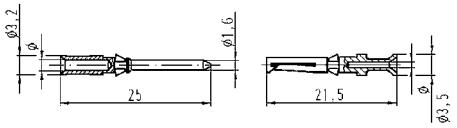

Wire gauge		⌀	Stripping length
0.14-0.37 mm²	AWG 26-22	0.9 mm	8 mm
0.5 mm²	AWG 20	1.1 mm	8 mm
0.75 mm²	AWG 18	1.3 mm	8 mm
1 mm²	AWG 18	1.45 mm	8 mm
1.5 mm²	AWG 16	1.75 mm	8 mm
2.5 mm²	AWG 14	2.25 mm	6 mm

M F

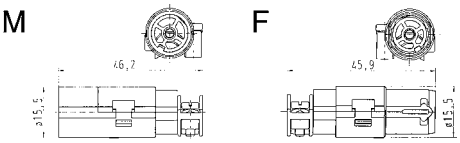

RF transmission characteristics

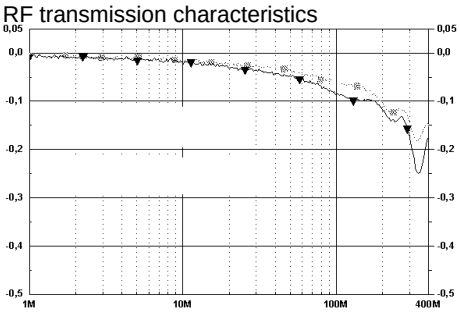

▩ 75 Ohm cable
▾ 75 Ohm cable with Han D® Coax

Technical characteristics

Electrical data acc. to IEC 61984	**16 A 50 V 0.8 kV 3**
Rated current	16 A
Rated voltage	50 V
Rated impulse voltage	0.8 kV
Pollution degree	3
Limiting temperatures	-40 °C ... 85 °C
Flammability (insert) acc. to UL 94	V 0
Material (insert)	zinc alloy
Material (contact)	copper alloy

Specifications and approvals

IEC 61984
IEC 60664-1

Details

Crimping tools see chapter 90

Remarks on the crimp technique

The wire gauges mentioned in the catalogue refer to geometric wire gauges of cables.

Identification	Wire cross section (mm²)	Part number male	Part number female	Drawing Dimensions in mm
Han E®, Crimp contact, gold plated contacts, contact resistance ≤1 mOhm	0.14 – 0.37	09 33 000 6117	09 33 000 6217	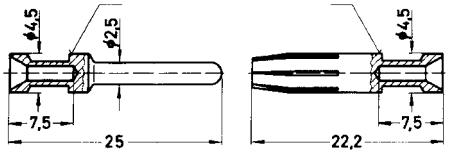
	0.5	09 33 000 6122	09 33 000 6222	
	0.75	09 33 000 6115	09 33 000 6215	
	1	09 33 000 6118	09 33 000 6218	
	1.5	09 33 000 6116	09 33 000 6216	
	2.5	09 33 000 6123	09 33 000 6223	
	4	09 33 000 6119	09 33 000 6221	
	5.5	09 33 000 6139	09 33 000 6239	
Coaxial contact, 1 + shielding, for Han E® crimp contacts, 50 Ohm Please order crimp contacts separately.		09 15 001 3023	09 15 001 3123	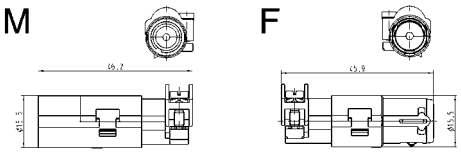

Identification	Wire gauge		Stripping length
no groove	0.14-0.37 mm²	AWG 26-22	7.5 mm
no groove	0.5 mm²	AWG 20	7.5 mm
1 groove*	0.75 mm²	AWG 18	7.5 mm
1 groove	1 mm²	AWG 18	7.5 mm
2 grooves	1.5 mm²	AWG 16	7.5 mm
3 grooves	2.5 mm²	AWG 14	7.5 mm
wide groove	3 mm²	AWG 12	7.5 mm
no groove	4 mm²	AWG 12	7.5 mm

* on the back crimp collar

Han E® Coax with RG 213 cable (2.5 mm²)	200 MHz	500 MHz	1.0 GHz	1.2 GHz	1.5 GHz	2.0 GHz	2.5 GHz
Return loss [db]	23.8	21.1	>18.7	>17.7	>16.4	>14.1	>12.0
Attenuation [db]	0:07	0.11	0.17	0.2	<0.23	<0.53	<2.0

Features

- Suitable for standard RJ 45 Plug and Jack, shielded version
- Connections are carried out acc. to EN 50173, Cat. 5
- Connection of the device side can be realized either by a printed circuit board as a modular version or as part of the appliance PCB
- Assembly with standard tools
- Insert for 2 Han-D® male or female contacts offers the combination with electrical bus connector

Technical characteristics

Contacts	1 x RJ45
Electrical data acc. to IEC 61984	**10 A 24 V 0.8 kV 3**
Rated current	10 A
Rated voltage	24 V
Rated impulse voltage	0.8 kV
Pollution degree	3
Insulation resistance	≥10^{10} Ohm
Limiting temperatures	-40 °C ... 125 °C
Flammability (insert) acc. to UL 94	V 0
Mating cycles	≥500
Material (insert)	polycarbonate
Colour (insert)	RAL 7032 (light grey)

Specifications and approvals

IEC 61984

Number of contacts

1 x RJ45

24 V
10 A
+ 2 electrical contacts 10 A

Identification	Part number male	Part number female	Drawing Dimensions in mm
Han-Brid®, Hybrid network connector, with RJ Industrial	09 12 003 3011		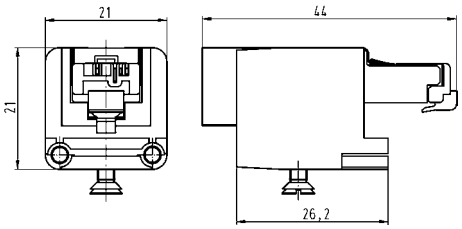
Han-Brid®, Hybrid network connector, with Stewart RJ45	09 12 003 3021		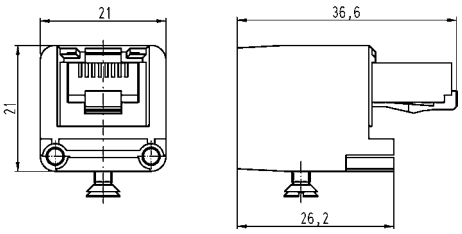
Han-Brid®, Hybrid network connector, with HIROSE RJ45	09 12 003 3031		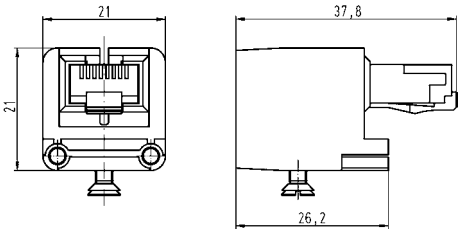
Han-Brid®, Hybrid network connector, Panel feed through, with 4 pole terminal block		09 12 003 2770	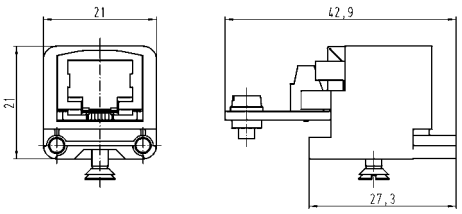
Han-Brid®, Hybrid network connector, Panel feed through, straight		09 12 003 2774	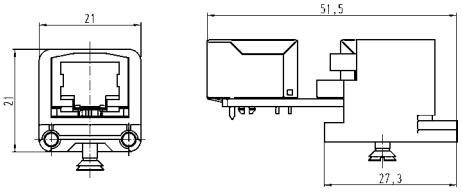

Han-Brid® RJ45 C

Identification	Part number male	Part number female	Drawing Dimensions in mm
Han-Brid®, Hybrid network connector, Panel feed through, angled		09 12 003 2776	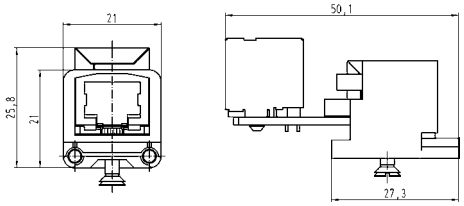

50 V
1 A
+ USB

Features

- Insert for all Han® 3 A hoods with glued sealing
- Simple and cost effective termination by plug in patch cable
- Cable tie strain relief

Technical characteristics

Electrical data acc. to IEC 61984	**1 A 50 V 0.8 kV 3**
Rated current	1 A
Rated voltage	50 V
Rated impulse voltage	0.8 kV
Pollution degree	3
Insulation resistance	≥10^{10} Ohm
Limiting temperatures	-40 °C ... 85 °C
Flammability (insert) acc. to UL 94	V 0
Mating cycles	≥500
Material (insert)	polycarbonate
Colour (insert)	RAL 7032 (light grey)

Specifications and approvals

IEC 60664-1
IEC 61984

Identification	Part number male	Part number female	Drawing Dimensions in mm
Han-Brid®, USB, device side, contact resistance ≥4 mOhm	09 12 001 2794		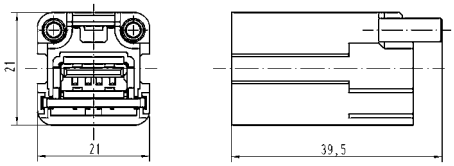
Han-Brid®, USB, cable side, contact resistance ≥4 mOhm		09 12 001 3091	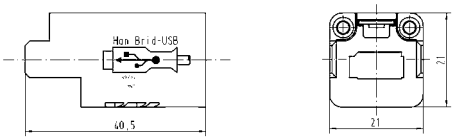

Han-Brid

50 V
1 A
+ FireWire

Features

- Insert for all Han® 3 A hoods with glued sealing
- Simple and cost effective termination by plug in patch cable
- Cable tie strain relief
- Compatibel to IEEE 1394

Technical characteristics

Electrical data acc. to IEC 61984	**1 A 50 V 0.8 kV 3**
Rated current	1 A
Rated voltage	50 V
Rated impulse voltage	0.8 kV
Pollution degree	3
Insulation resistance	≥10^{10} Ohm
Limiting temperatures	-40 °C ... 85 °C
Flammability (insert) acc. to UL 94	V 0
Mating cycles	≥500
Material (insert)	polycarbonate
Colour (insert)	RAL 7032 (light grey)

Specifications and approvals

IEC 60664-1
IEC 61984

Identification	Part number male	Part number female	Drawing Dimensions in mm
Han-Brid®, FireWire, device side, contact resistance ≥4 mOhm	09 12 001 2774		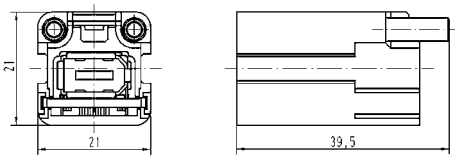
Han-Brid®, FireWire, cable side, contact resistance ≥4 mOhm		09 12 001 3071	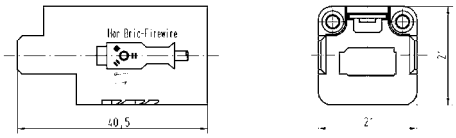

Han-Brid

Features

- Suitable with housings, size Han® 3 A including versions Han® M, Han® EMV and Han® HPR
- Degree of protection up to IP 68
- Suitable for HARTING SC contacts
- For Multimode fibre 50 - 62.5 / 125 µm and Singlemode fibre 9 / 125 µm
- Full ceramic sleeves for a minimal insertion loss
- 1 mm POF

Technical characteristics

Contacts	4
Insulation resistance	≥10^{10} Ohm
Limiting temperatures	-40 °C ... 85 °C
Flammability (insert) acc. to UL 94	V 0
Mating cycles	≥500
Material (insert)	polycarbonate
Colour (insert)	RAL 7032 (light grey)

Specifications and approvals

GL

Details

Assembly instructions

Female module

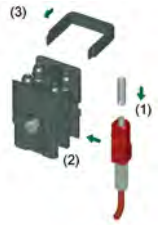

Assemble the SC contact
① Push the centering ferrule (included in delivery) on the SC contact
② Push the SC contact from the side into the relevant insert
③ Push the spring clip over the contact body.

Assembly instructions

Male module

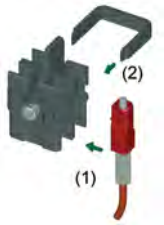

Assemble the SC contact
① Push the SC contact from the side into the relevant insert
② Push the spring clip over the contact body.

Number of contacts

4

Identification	Part number male	Part number female	Drawing Dimensions in mm
Han® SC module, for F.O. 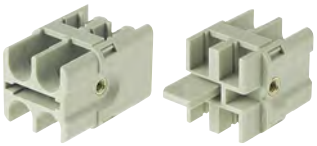 Please order contacts separately.	09 20 004 4701	09 20 004 4711	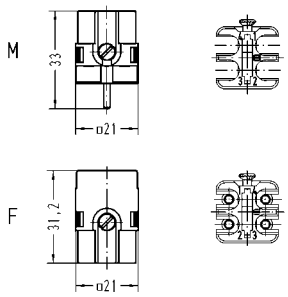 Contact arrangement (view from termination side) The female inserts are equipped with centering ferrules. 4 ferrules are included in delivery range.
SC contact for GI fibre 50/125 µm or 62.5/125 µm ceramic ferrule	20 10 125 5211	20 10 125 5211	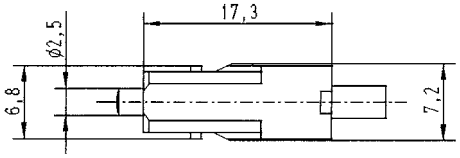
SC contact for single mode fibre 9/125 µm	20 10 125 5220	20 10 125 5220	
SC contact for SI fibre (HCS®) 200/230 µm	20 10 230 5211	20 10 230 5211	
SC contact, with crimp technique, for 1 mm POF	20 10 001 5211	20 10 001 5211	
SC contact, with quick assembly, for 1 mm POF	20 10 001 5217	20 10 001 5217	

Features

- Metal hoods/housings for industrial applications
- with glued seal

Technical characteristics

Limiting temperatures	-40 °C ... 125 °C
Flammability (hoods/housings) acc. to UL 94	V 0
Flammability (locking lever) acc. to UL 94	V 0
Flammability (seal) acc. to UL 94	V 0
Protection class acc. to UL 50	NEMA type 4/4X/12
Degree of protection acc. to IEC 60529	IP44 / IP67 is achieved with seal screw 09 20 000 9918
Material (hoods/housings)	zinc die-cast
Surface (hoods/housings)	powder-coated
Colour (hoods/housings)	RAL 7037 (grey)
Material (locking lever)	steel, zinc-plated
Material (seal)	NBR

Specifications and approvals

GL

Metal hoods/housings for industrial applications
double locking lever

Identification	Cable entry	Part number	Drawing Dimensions in mm
Han A® , Hoods, for Han-Brid®, top entry, with glued sealing	1xM20	19 20 003 1443	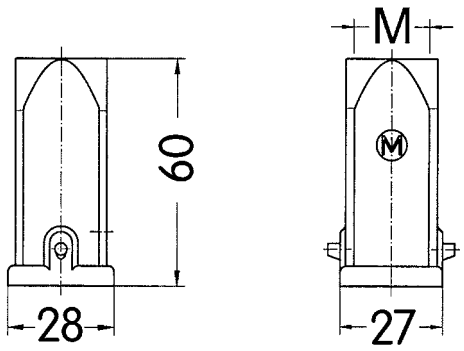
Han A® , Hoods, for Han-Brid®, side entry, with glued sealing	1xM20	19 20 003 1643	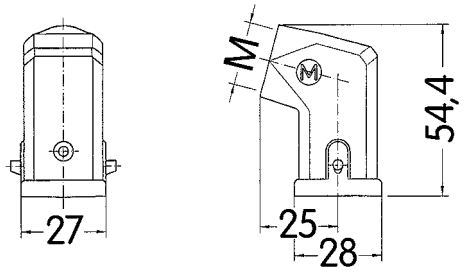
Han A® , Hood with integrated cable gland, for Han-Brid®, top entry, with glued sealing	6...12 mm	19 20 003 1423	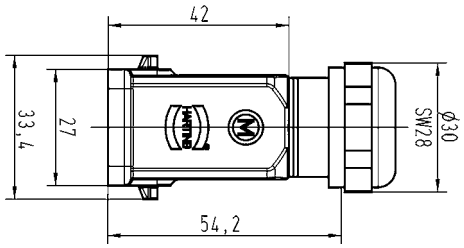
Han A® , Hood with integrated cable gland, top entry, with glued sealing	6...12 mm	19 20 003 1425	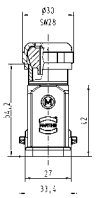

Han-Brid

Identification	Cable entry	Part number	Drawing Dimensions in mm
Han A® , Protection cover for hoods, for mounted male insert or for mounted Han-Brid® insert, metal, with securing flex 		09 20 003 5422	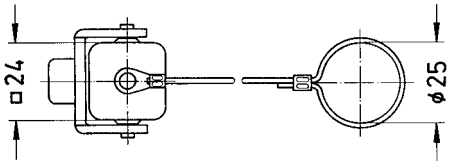
Han A® , Bulkhead mounted housings, straight 		09 20 003 0301	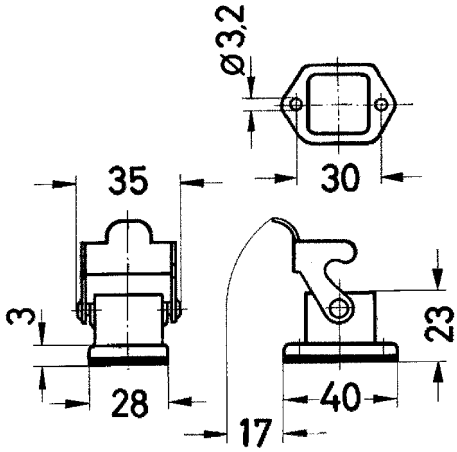 Panel cut out 22 x 22 mm
Han A® , Surface mounted housings, top entry, open bottom 	1xM20	19 20 003 1250	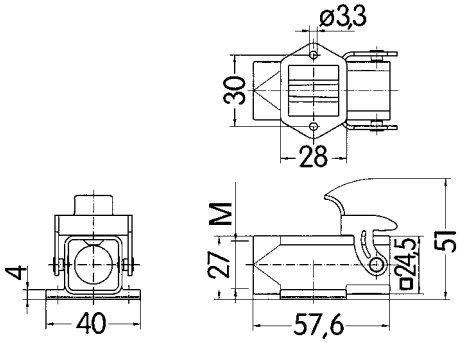 Panel cut out 22 x 22 mm
Han A® , Surface mounted housings, top entry, bottom closed 	1xM20	19 20 003 1252	

Han-Brid

Identification	Cable entry	Part number	Drawing Dimensions in mm
Han A® , Cable to cable housings, top entry	1xM20	19 20 003 1750	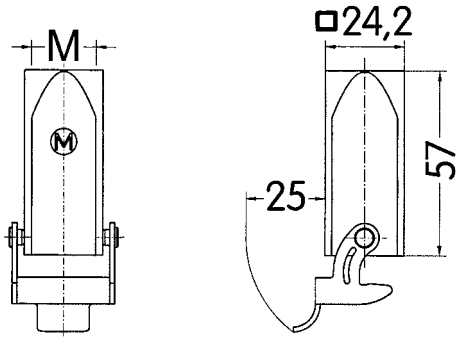
Han A® , Protection cover for cable to cable hous- ings, for mounted female insert or for mounted Han-Brid® insert, metal, with securing flex, with sealing		09 20 003 5427	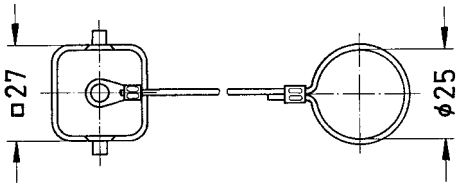
Han A® , Protection cover for housings, for mounted female insert or for mounted Han-Brid® insert, metal, with securing flex, with sealing		09 20 003 5425	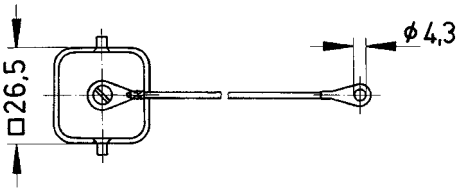
Han A® , Screw mounted housings, top entry	1xM20	19 20 003 1150	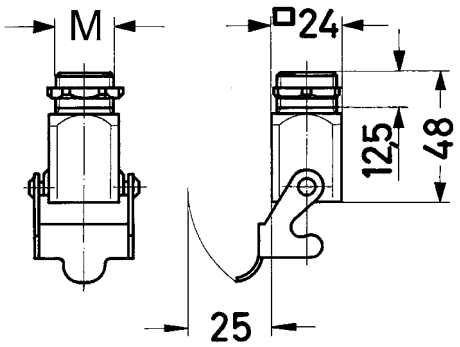

Han-Brid

Features

- Plastic hoods/housings for industrial applications
- with glued seal

Technical characteristics

Limiting temperatures	-40 °C ... 125 °C
Flammability (hoods/housings) acc. to UL 94	V 0
Flammability (locking lever) acc. to UL 94	V 0
Flammability (seal) acc. to UL 94	V 0
Protection class acc. to UL 50	NEMA type 4/4X/12
Degree of protection acc. to IEC 60529	IP44 / IP67 is achieved with seal screw 09 20 000 9918
Material (hoods/housings)	polycarbonate
Colour (hoods/housings)	RAL 7032 (light grey), RAL 9005 (black)
Material (locking lever)	polyamide
Colour (locking lever)	RAL 7032 (light grey), RAL 9005 (black)
Material (seal)	NBR

Specifications and approvals

GL

Plastic hoods/housings for industrial applications
double locking lever

Identification	Cable entry	Part number	Drawing Dimensions in mm
Han A® , Hoods, for Han-Brid®, top entry, with glued sealing	1xM20	19 20 003 0423	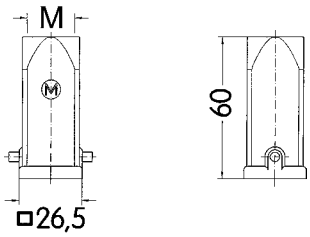
Han A® , Hoods, for Han-Brid®, top entry, with glued sealing, black	1xM20	19 20 003 0426	
Han A® , Hoods, for Han-Brid®, side entry, with glued sealing	1xM20	19 20 003 0623	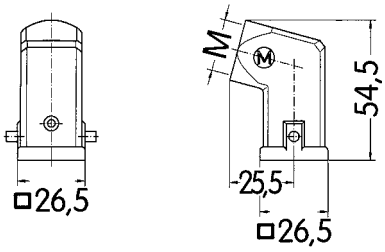
Han A® , Hoods, for Han-Brid®, side entry, with glued sealing, black	1xM20	19 20 003 0626	

Han-Brid

Identification	Cable entry	Part number	Drawing Dimensions in mm
Han A® , Hood with integrated cable gland, top entry, with glued sealing 	9...17 mm	19 20 003 0413	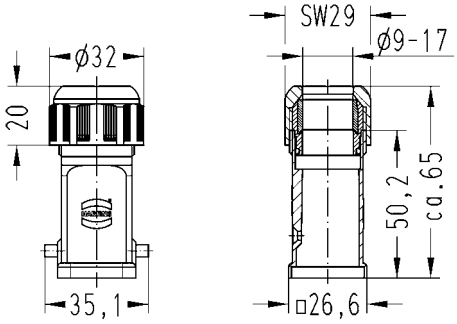
Han A® , Protection cover for hoods, for mounted male insert or for mounted Han-Brid® insert, plastic, with securing flex 		09 20 003 5442	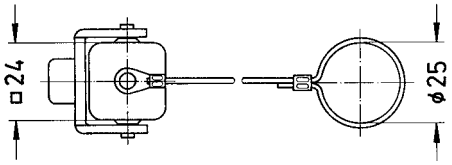
Han A® , Bulkhead mounted housings, straight 		09 20 003 0320	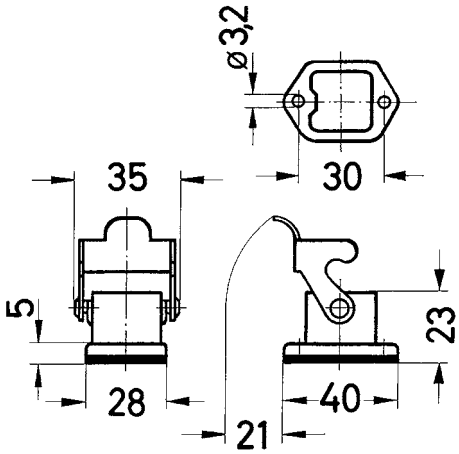 Panel cut out 22 x 22 mm
Han A® , Bulkhead mounted housings, angled 		09 20 003 0820	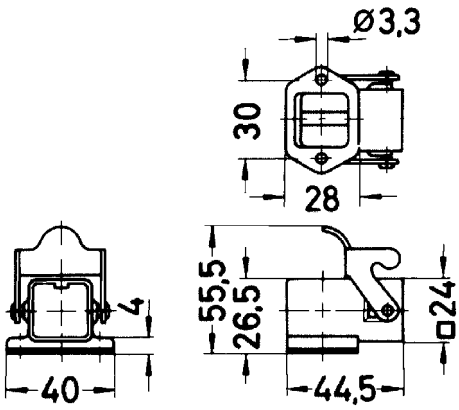 Panel cut out 22 x 22 mm

Identification	Cable entry	Part number	Drawing Dimensions in mm
Han A® , Bulkhead mounted housings, straight, black		09 20 003 0327	
Han A® , Bulkhead mounted housings, angled, black		09 20 003 0827	
Han A® , Surface mounted housings, top entry 	1xM20	19 20 003 0220	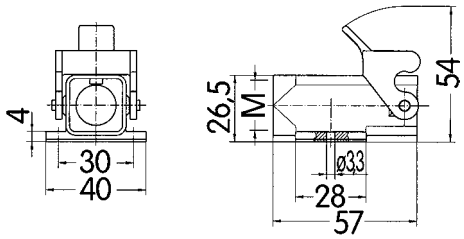 Panel cut out 22 x 22 mm
Han A® , Surface mounted housings, top entry, black	1xM20	19 20 003 0227	
Han A® , Cable to cable housings, top entry 	1xM20	19 20 003 0720	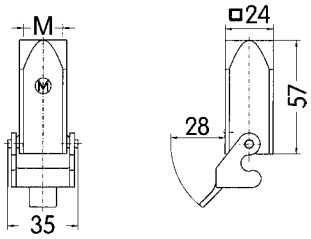
Han A® , Cable to cable housings, top entry, black	1xM20	19 20 003 0727	
Han A® , Protection cover for cable to cable housings, for mounted female insert, plastic, with sealing, with securing flex 		09 20 003 5447	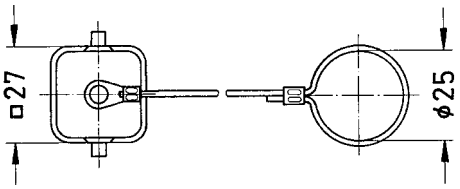
Han A® , Protection cover for housings, for mounted female insert, plastic, with sealing, with securing flex 		09 20 003 5445	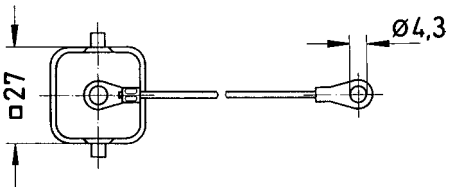

Identification	Cable entry	Part number	Drawing Dimensions in mm
Han A® , Protection cover for housings, for mounted female insert, plastic, with sealing, with securing flex, black 		09 20 003 5449	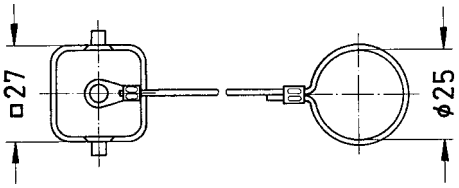
Han A® , Protection cover for housings, for mounted female insert or for mounted Han-Brid® insert, plastic, with sealing 		09 20 003 5408	
Han A® , Protection cover, for mounted female insert or for mounted Han-Brid® insert, plastic, with sealing, black 		09 20 003 5409	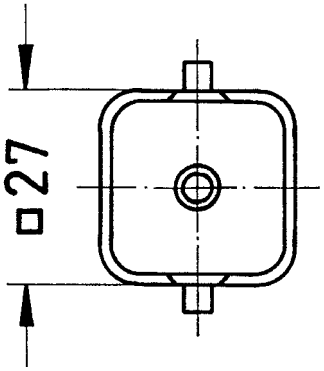

Features

- Hoods/Housings for higher environmental requirements
- with glued seal

Technical characteristics

Limiting temperatures	-40 °C ... 125 °C
Flammability (locking lever) acc. to UL 94	V 0
Protection class acc. to UL 50	NEMA type 4/4X/12
Degree of protection acc. to IEC 60529	IP65 / IP67
Corrosion resistance	ASTM B117-09 (500 h)
Material (hoods/housings)	zinc die-cast
Surface (hoods/housings)	powder-coated
Colour (hoods/housings)	RAL 9005 (black)
Material (locking lever)	stainless steel
Material (seal)	FPM

Specifications and approvals

GL, UL

Hoods/Housings for higher environmental requirements
double locking lever

Identification	Cable entry	Part number	Drawing Dimensions in mm
Han® M, Hoods, top entry, with glued sealing	1xM20	19 37 003 1443	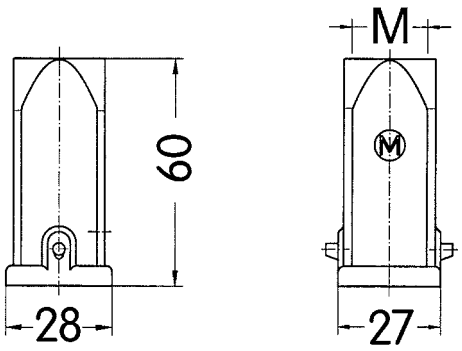
Han® M, Hoods, side entry, with glued sealing	1xM20	19 37 003 1643	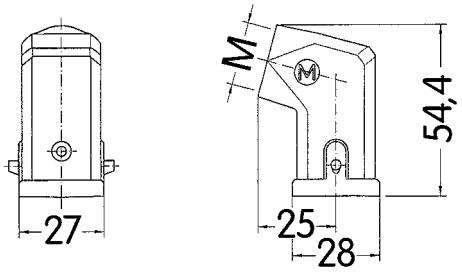
Han® M, Bulkhead mounted housings, straight		09 37 003 0301	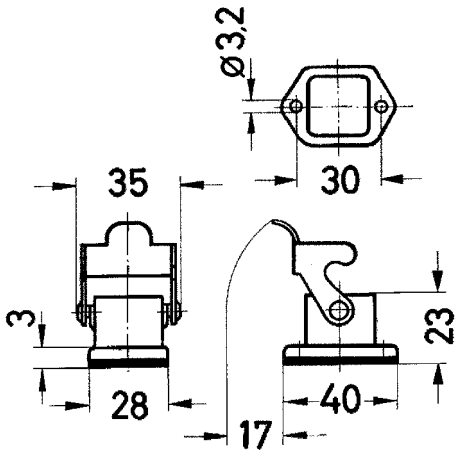 Panel cut out 22 x 22 mm

Han-Brid

Identification	Cable entry	Part number	Drawing Dimensions in mm
Han® M, Surface mounted housings, top entry	1xM20	19 37 003 1250	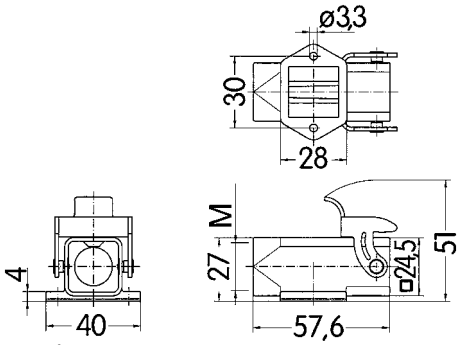 Panel cut out 22 x 22 mm
Han® M, Cable to cable housings, top entry	1xM20	19 37 003 1750	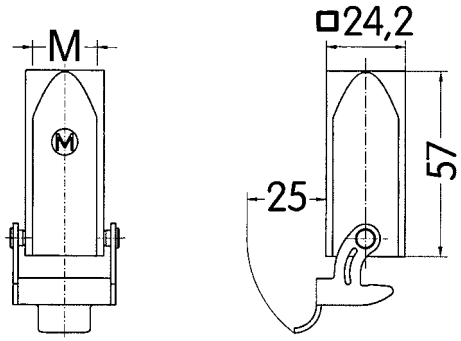

Features

- Hoods/Housings for higher EMC requirements
- with glued seal

Technical characteristics

Limiting temperatures	-40 °C ... 125 °C
Flammability (locking lever) acc. to UL 94	V 0
Protection class acc. to UL 50	NEMA type 4/4X/12
Degree of protection acc. to IEC 60529	IP44 / IP67 is achieved with seal screw 09 20 000 9918
Material (hoods/housings)	zinc die-cast
Surface (hoods/housings)	unpainted, electrical conductive
Material (locking lever)	steel, zinc-plated
Material (seal)	NBR

Specifications and approvals

GL

Hoods/Housings for higher EMC requirements
double locking lever

Identification	Cable entry	Part number	Drawing Dimensions in mm
Han® EMV, Hoods, top entry, with glued sealing	1xM20	19 62 003 1443	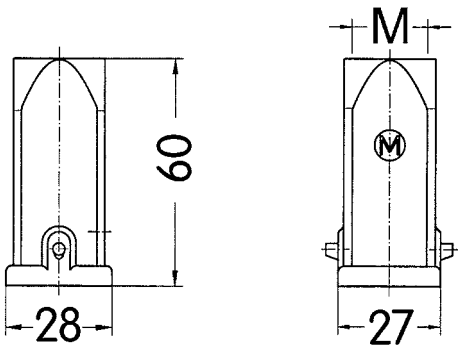
Han® EMV, Hoods, side entry, with glued sealing	1xM20	19 62 003 1643	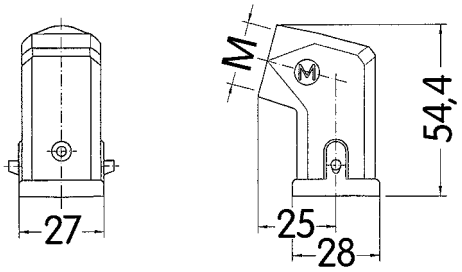
Han® EMV, Bulkhead mounted housings, straight		09 62 003 0301	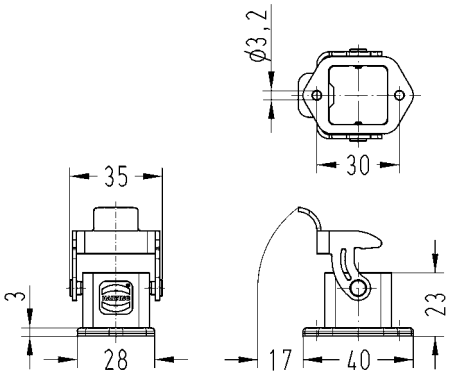 Panel cut out 22 x 22 mm

Identification	Cable entry	Part number	Drawing Dimensions in mm
Han® EMV, Surface mounted housings, top entry 	1xM20	19 62 003 1250	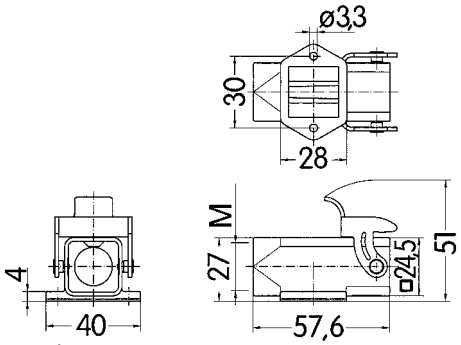 Panel cut out 22 x 22 mm
Han® EMV, Cable to cable housings, top entry 	1xM20	19 62 003 1750	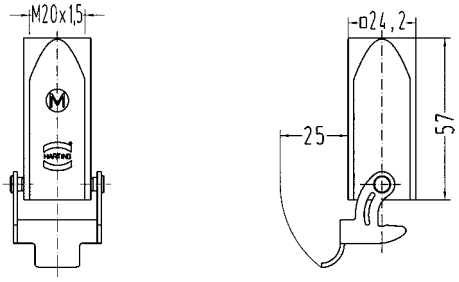

Features

- Han-INOX® hoods/housings for higher corrosion requirements
- with glued seal

Technical characteristics

Limiting temperatures	-40 °C ... 125 °C
Flammability (locking lever) acc. to UL 94	V 0
Protection class acc. to UL 50	NEMA type 4/4X/12
Degree of protection acc. to IEC 60529	IP44 / IP67 is achieved with seal screw 09 20 000 9918, IP65 / IP67
Material (hoods/housings)	stainless steel
Surface (hoods/housings)	unpainted
Material (locking lever)	stainless steel
Material (seal)	NBR
Material (screwing)	stainless steel

Specifications and approvals

GL

Hoods/Housings for agressive environmental requirements
double locking lever

Identification	Cable entry	Part number	Drawing Dimensions in mm
Han-INOX®, Hoods, top entry, with glued sealing	1xM20	19 44 003 1443	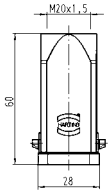
Han-INOX®, Hoods, side entry, with glued sealing	1xM20	19 44 003 1643	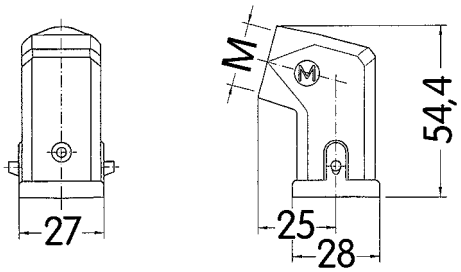
Han-INOX®, Protection cover for hoods, for mounted male insert or for mounted Han-Brid® insert, metal, with securing flex		19 44 003 5422	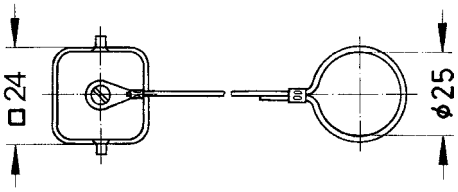
Han-INOX®, Bulkhead mounted housings, straight		19 44 003 0301	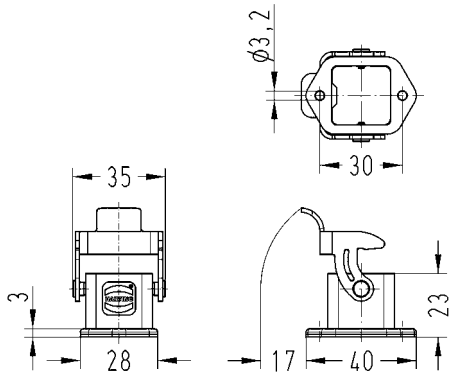 Panel cut out 22 x 22 mm

Han-Brid

Identification	Cable entry	Part number	Drawing Dimensions in mm
Han-INOX®, Bulkhead mounted housings, angled 		19 44 003 0801	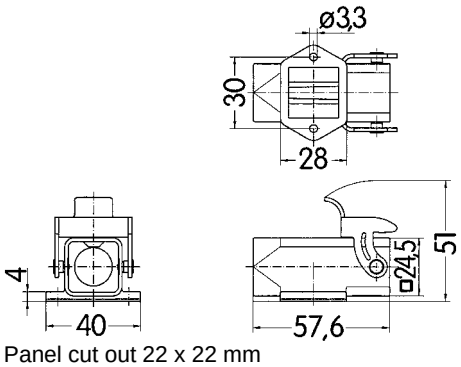 Panel cut out 22 x 22 mm
Han-INOX®, Surface mounted housings, side entry 	1xM20	19 44 003 1250	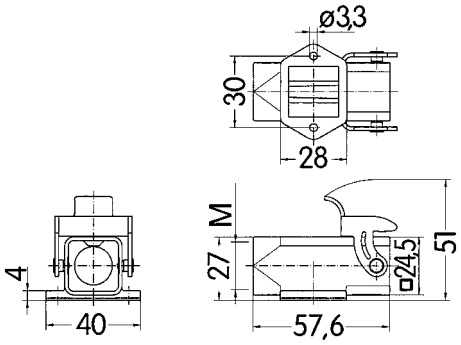
Han-INOX®, Protection cover for housings, for mounted female insert or for mounted Han-Brid® insert, metal, with securing flex 		19 44 003 5425	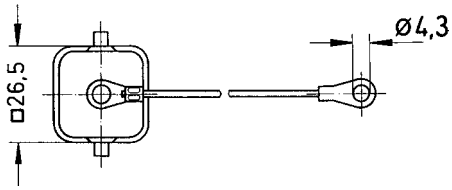
Han-INOX®, Screw mounted housings, top entry Range of delivery: 1x M20 stainless steel screw nut 	1xM20	19 44 003 1150	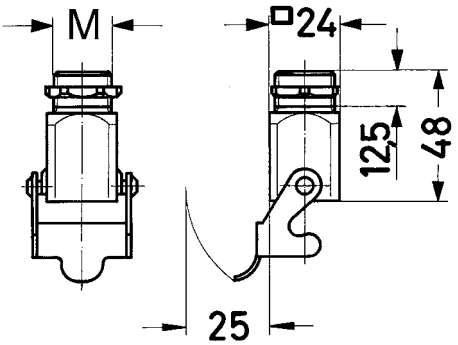

Features

- Hoods/Housings for harsh environmental requirements
- Highly EMC resistant
- Screw locking M4
- Field of application: For external electrical interconnections in vehicles, in highly demanding environments and wet areas, as well as for sensitive interconnections that have to be shielded
- Distinguishing feature: colour-coded black, internal seal (RAL 9005)

Technical characteristics

Limiting temperatures	-40 °C ... 125 °C
Protection class acc. to UL 50	NEMA 4/12, NEMA type 4/4X/12
Degree of protection acc. to IEC 60529	IP69K
Degree of protection acc. to IEC 60529	IP65 / IP68
Tightening torque (locking)	2 Nm
Corrosion resistance	ASTM B117-09 (500 h)
Material (hoods/housings)	zinc die-cast
Surface (hoods/housings)	powder-coated, chromated
Colour (hoods/housings)	RAL 9005 (black)
Material (seal)	NBR
Material (screwing)	stainless steel

Specifications and approvals

Hoods/Housings for harsh environmental requirements

Identification	Cable entry	Part number	Drawing Dimensions in mm
Han® HPR, Hoods, with sealing screw, top entry, toggle locking	1xM20	19 40 703 0400	
Han® HPR, Hoods, with sealing screw, top entry, screw locking	1xM20 1xM25	19 40 703 0410 19 40 703 0411	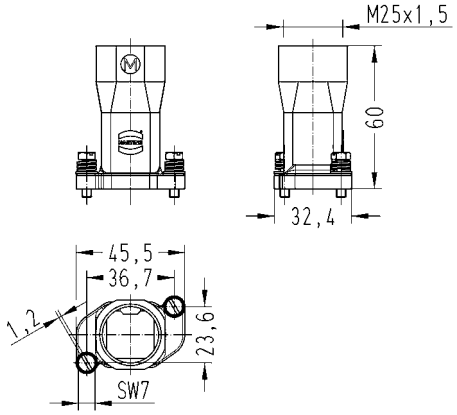
Han® HPR, Bulkhead mounted housings, with sealing screw, toggle locking		09 40 703 0301	
Han® HPR, Bulkhead mounted housings, with sealing screw, screw locking		09 40 703 0311	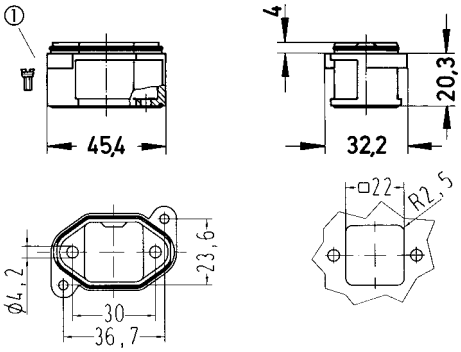 Panel cut out 21.3 x 21.3 mm ① sealing screw

Identification	Cable entry	Part number	Drawing Dimensions in mm
Han® HPR, Bulkhead mounted housings, angled, with sealing screw, screw locking 		09 40 703 0950	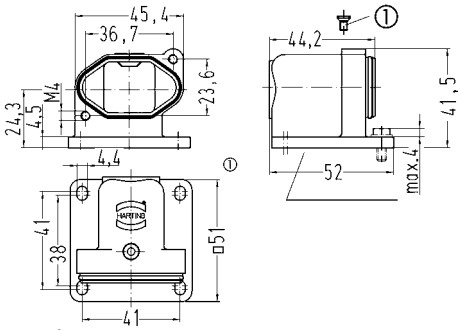 Panel cut out 21.3 x 21.3 mm ① sealing screw
Han® HPR, Bulkhead mounted housings, angled, screw locking, long version, feed through hole for fixing screws 		09 40 703 0951	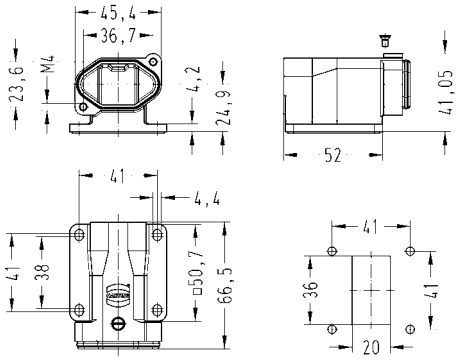 Panel cut out
Han® HPR, Bulkhead mounted housings, angled, screw locking, long version, tapped blind hole for fixing screws 		09 40 703 0953	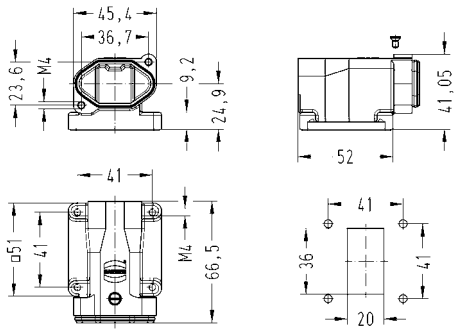 Panel cut out
Han® HPR, Surface mounted housings, angled, with sealing screw, top entry, screw locking, bottom closed	1xM20	19 40 703 0950	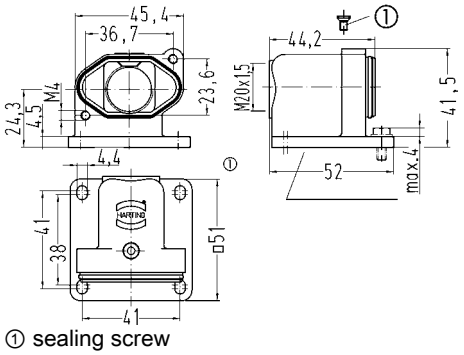 ① sealing screw

Han-Brid

Identification	Cable entry	Part number	Drawing Dimensions in mm
Han® HPR, Surface mounted housings, angled, with sealing screw, top entry, screw locking, long version with closed bottom and feed through hole for fixing screws	1xM25	19 40 703 0951	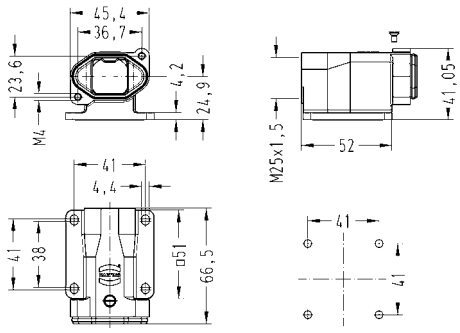 Panel cut out
Han® HPR, Surface mounted housings, angled, with sealing screw, top entry, screw locking, long version with closed bottom and tapped blind hole for fixing screws	1xM25	19 40 703 0953	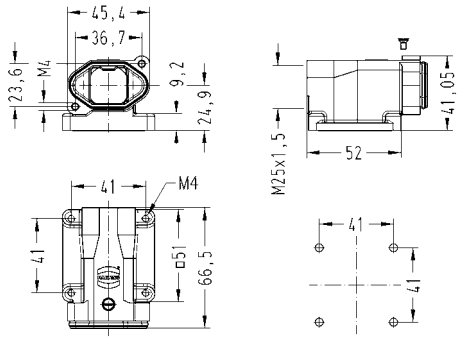 Panel cut out
Han® HPR, Cover for housings, toggle locking Han® HPR, Cover for housings, toggle locking, with securing flex Han® HPR, Cover for housings, screw locking Han® HPR, Cover for housings, screw locking, with securing flex		09 40 703 5401 09 40 703 5402 09 40 703 5411 09 40 703 5412	
Han® HPR, Dust protection cover, plastic 		09 40 003 5406	

Hoods/Housings for harsh environmental requirements

Identification	Cable entry	Part number	Drawing Dimensions in mm
Han® HPR, Hoods, with sealing screw, top entry, toggle locking	1xM20	19 40 003 0400	
Han® HPR, Hoods, with sealing screw, top entry, screw locking	1xM20 1xM25	19 40 003 0410 19 40 003 0411	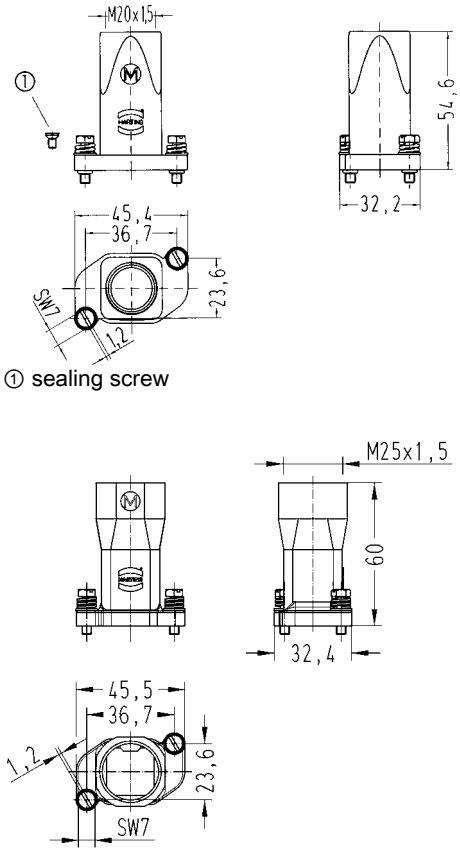
Han® HPR, Bulkhead mounted housings, with sealing screw, toggle locking		09 40 003 0301	

Identification	Cable entry	Part number	Drawing Dimensions in mm
Han® HPR, Bulkhead mounted housings, with sealing screw, screw locking 		09 40 003 0311	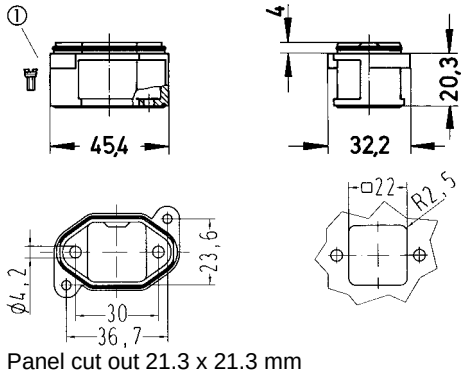 Panel cut out 21.3 x 21.3 mm ① sealing screw
Han® HPR, Bulkhead mounted housings, angled, with sealing screw, screw locking 		09 40 003 0950	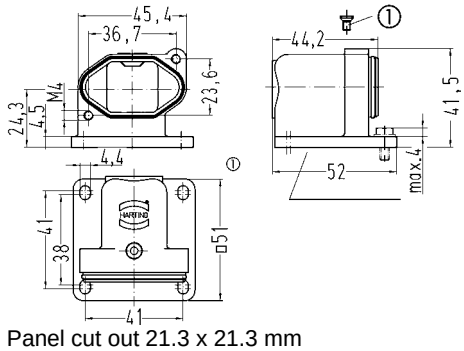 Panel cut out 21.3 x 21.3 mm ① sealing screw
Han® HPR, Bulkhead mounted housings, angled, screw locking, long version, feed through hole for fixing screws 		09 40 003 0951	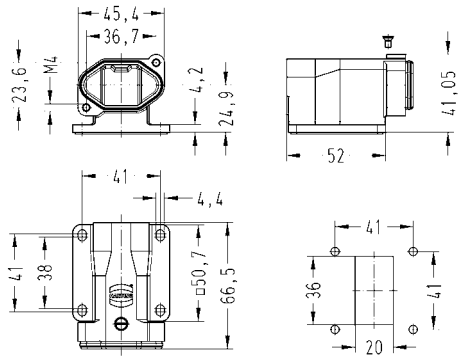 Panel cut out
Han® HPR, Bulkhead mounted housings, angled, with sealing screw, screw locking, long version, tapped blind hole for fixing screws 		09 40 003 0953	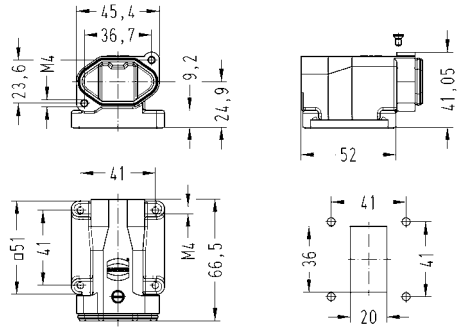 Panel cut out

Identification	Cable entry	Part number	Drawing Dimensions in mm
Han® HPR, Surface mounted housings, angled, with sealing screw, top entry, screw locking, bottom closed 	1xM20	19 40 003 0950	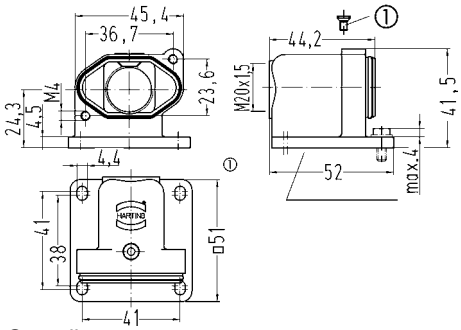 ① sealing screw
Han® HPR, Surface mounted housings, angled, with sealing screw, top entry, screw locking, long version with closed bottom and feed through hole for fixing screws	1xM25	19 40 003 0951	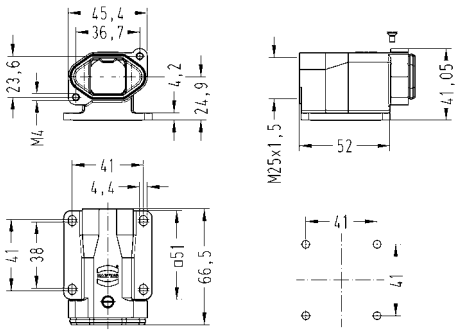 Panel cut out
Han® HPR, Surface mounted housings, angled, with sealing screw, top entry, screw locking, long version with closed bottom and tapped blind hole for fixing screws	1xM25	19 40 003 0953	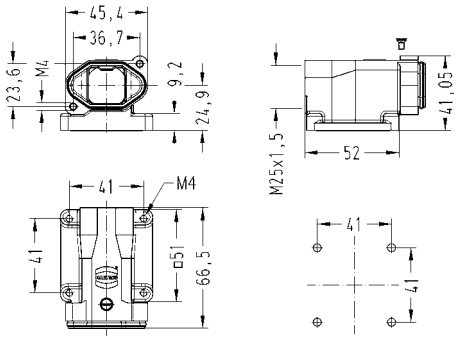 Panel cut out
Han® HPR, Cover for housings, toggle locking		09 40 003 5401	
Han® HPR, Cover for housings, toggle locking, with securing flex		09 40 003 5402	
Han® HPR, Cover for housings, screw locking		09 40 003 5411	
Han® HPR, Cover for housings, screw locking, with securing flex		09 40 003 5412	

Han® 3 HPR hoods/housings - chromated

Size 3 A

Identification	Cable entry	Part number	Drawing Dimensions in mm
Han® HPR, Dust protection cover, plastic		09 40 003 5406	

Contents | Page

Han-Fast® Lock	**20.11**
PCB adapter for Han DD®	**20.13**
PCB adapter for Han® DDD module	**20.16**
PCB adapter for Han® 40 A Axial module	**20.18**
PCB adapter for Han E®	**20.20**
PCB adapter for Han® Q 4/2	**20.22**
PCB adapter for Han® Q 5/0	**20.25**
PCB adapter for Han® Q 7/0	**20.28**
PCB adapter for Han® Q 8/0	**20.31**
PCB adapter for Han® Q 12/0	**20.34**

Layout of PCB

Han® 24 DD

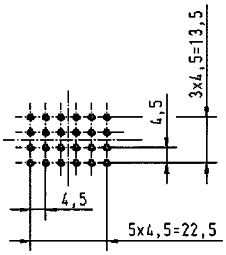

Han® 42 DD

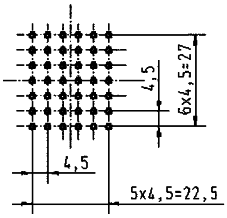

Han® 72 DD

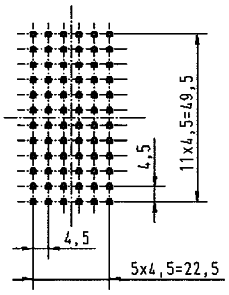

Han® 108 DD

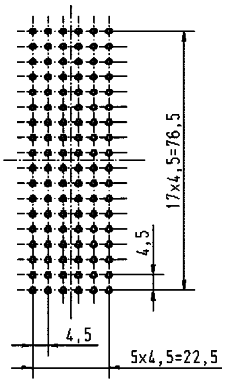

Recommended hole diameter: 0.8 mm

Assembly situation

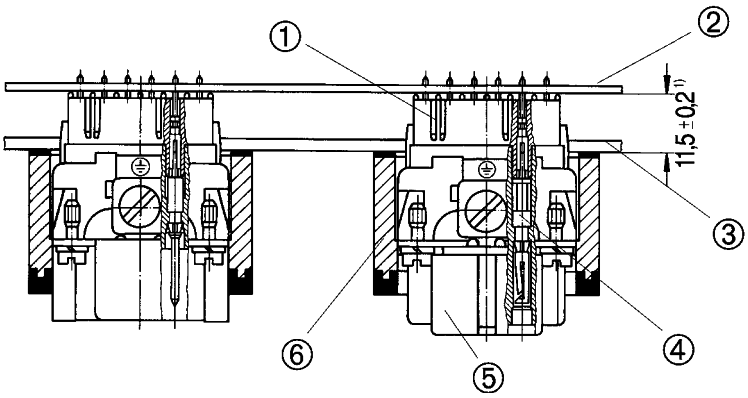

① PCB adapter
② Printed circuit board (PCB)
③ Switch board panel
④ Han DD® double contact
⑤ Han DD® insert
⑥ Han® B bulkhead mounted housing

1) for Han® B EMC housings spacing of 12.5 ± 0.2 mm is necessary as no flange seal is used

Layout of PCB

Dimensions in mm

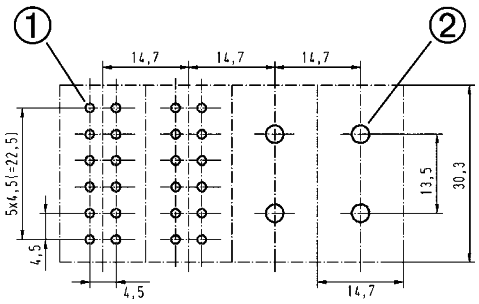

Han DD® module

Han® 40 A module

① Recommended hole diameter: 0.8 mm
② Recommended hole diameter: 3.2 mm

Assembly situation

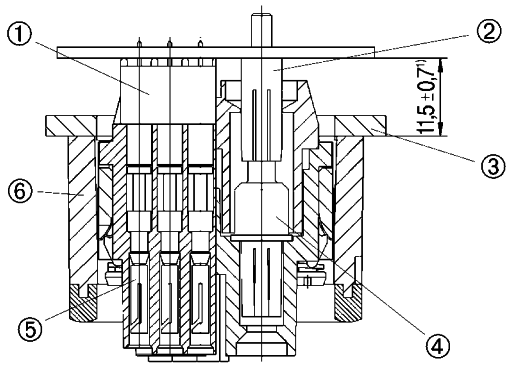

① Han DD® PCB-adapter
② Han® C solder contact
③ Switch board panel
④ Module for connection to printed circuit board
⑤ Han D® double contact
⑥ Han® B bulkhead mounted housing

[1] for Han® B EMC housings spacing of 12.5 ± 0.7 mm is necessary as no flange seal is used

Layout of PCB

Dimensions in mm

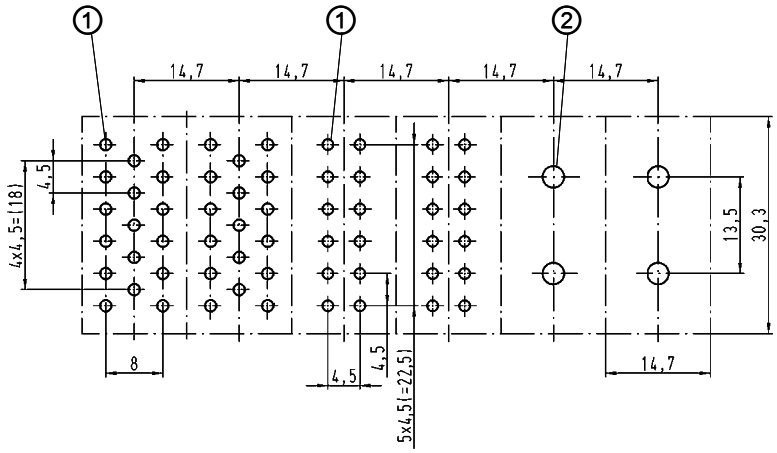

Han® DDD module Han® DD module Han® 70 A module

① Recommended hole diameter: 0.8 mm
② Recommended hole diameter: 3.2 mm

Assembly situation

Dimensions in mm

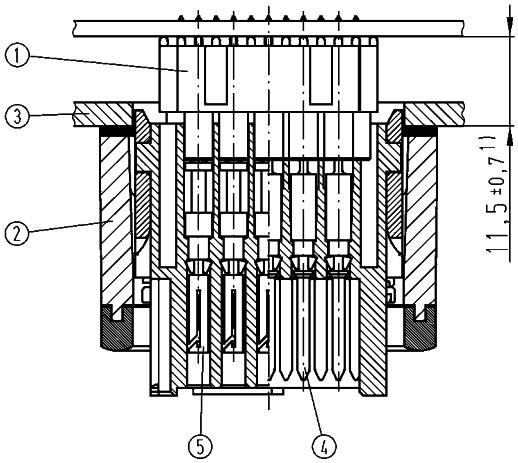

① Han DDD® PCB adapter 5 pins
② Han® B bulkhead mounted housing
③ Switch board panel
④ Han D® double male contact, 09 15 000 6197
⑤ Han D® double female contact, 09 15 000 6291

1) for Han® B EMV hood and housing spacing of 12.5 ±0.7 mm is necessary as no flange seal is used.

For further information and Han-Modular® frames please refer to chapter 06 (Han-Modular®)

for more technical details see chapter 06

Layout of PCB

Han® 6 E

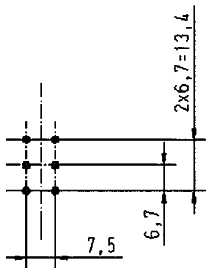

Han® 10 E

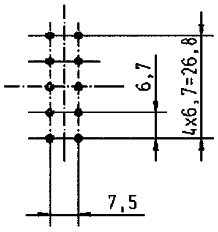

Han® 16 E

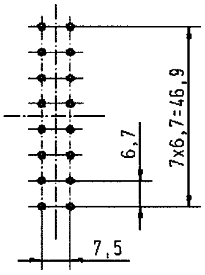

Han® 24 E

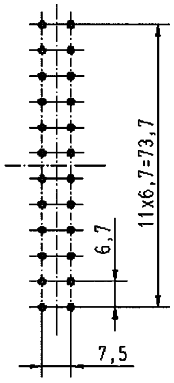

Assembly situation

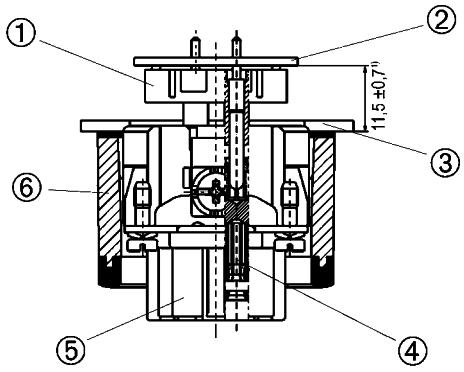

① PCB adapter
② Printed circuit board (PCB)
③ Switch board panel
④ Han E® double contact
⑤ Han E® insert
⑥ Han® B bulkhead mounted housing

[1)] for Han® B EMC housings spacing of 12.5 ± 0.7 mm is necessary as no flange seal is used

Layout of PCB

Dimensions in mm

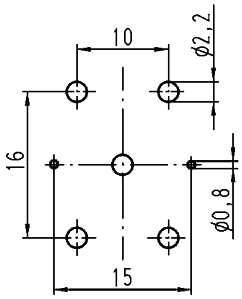

Assembly situation

X = 16^{+1} with signal contact or 16^{+2} without signal contact

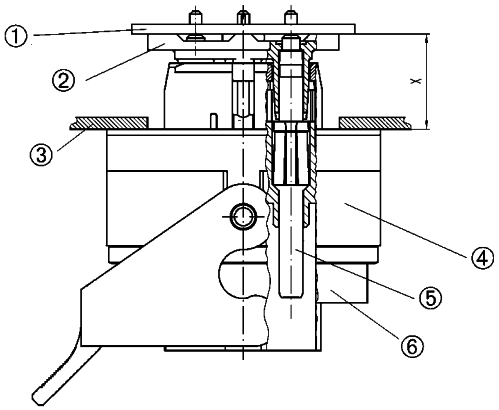

① Printed circuit board (PCB)
② PCB adapter
③ Switch board panel
④ Han-Compact® bulkhead mounted housing
⑤ Han® C double contact
⑥ Han® Q 4/2 insert

Layout of PCB

Dimensions in mm

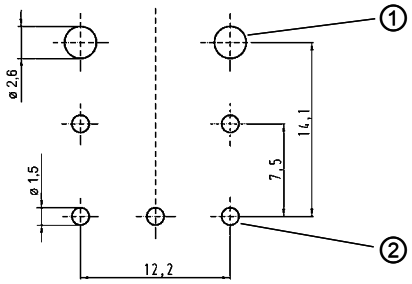

① Recommended hole diameter: 2.6 mm
② Recommended hole diameter: 1.5 mm

Assembly situation

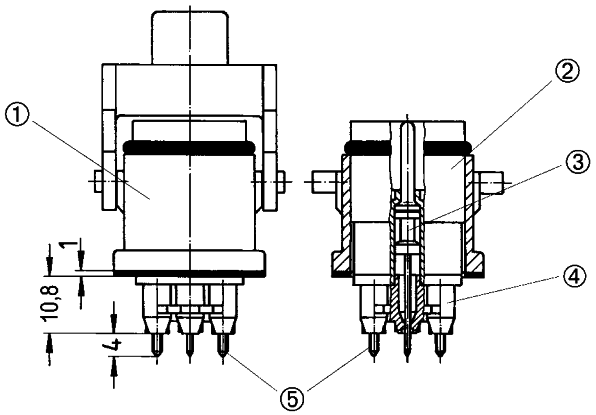

① Han® 3 A bulkhead mounting housing
② Han® Q 5/0
③ Solder contacts
④ PCB adapter
⑤ Connection to printed circuit board

Layout of PCB

Dimensions in mm

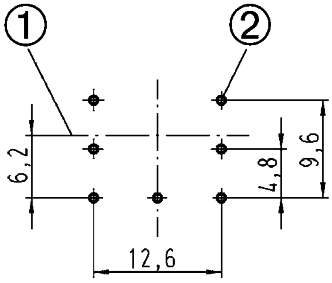

① Median plane of the housing
② Recommended hole diameter: 0.8 mm

Assembly situation

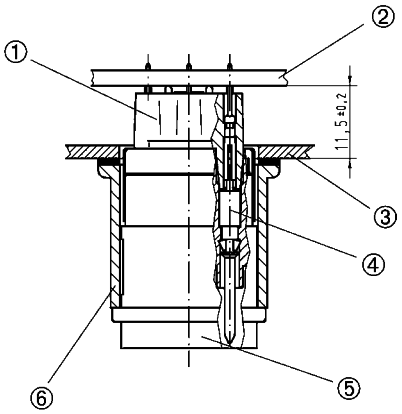

① PCB adapter
② Printed circuit board (PCB)
③ Switch board panel
④ Han D® double contact
⑤ Han® Q 7/0 Insert
⑥ Han® 3 A bulkhead mounting housing

Layout of PCB

Dimensions in mm

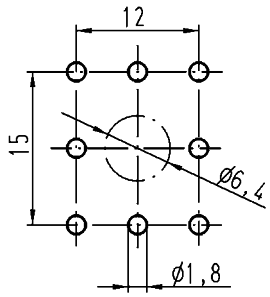

Assembly situation

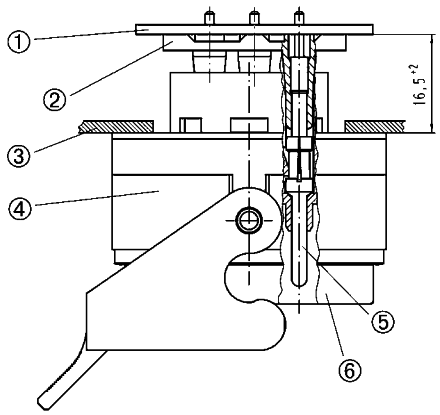

① Printed circuit board (PCB)
② PCB adapter
③ Switch board panel
④ Han-Compact® bulkhead mounted housing
⑤ Han E® double contact
⑥ Han® Q 8/0 Insert

Layout of PCB

Dimensions in mm

Recommended hole diameter: 0.8 mm

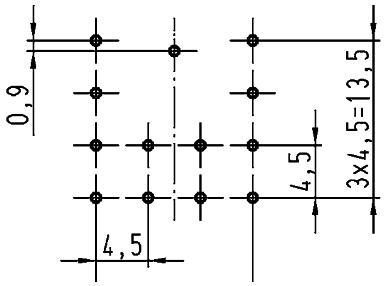

Assembly situation

Han® 3 A Standard / EMC

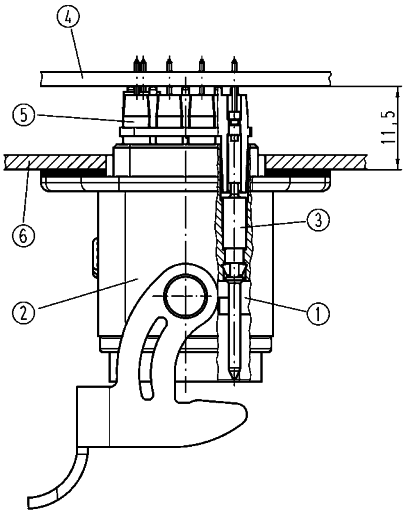

Han® 3 A plastic

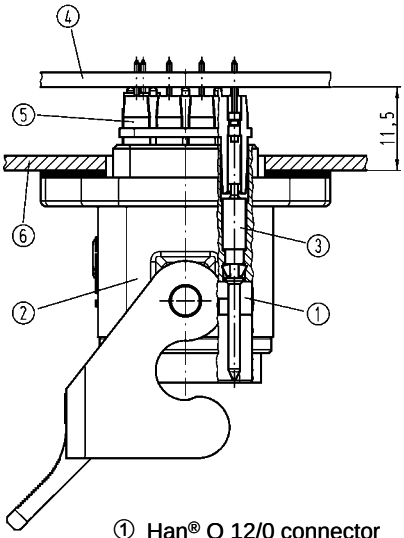

Han® 3 A HPR

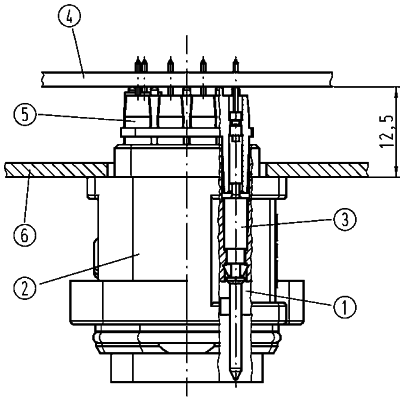

① Han® Q 12/0 connector
② Han® 3 A housing bulkhead mounting
③ R15-double contact
④ Printed circuit board (PCB)
⑤ PCB adapter
⑥ Switch board panel

Features

- Solder free PCB termination
- PCB contact with locking element
- Machine processing
- Flexible in terms of applications
- Practical and easy handling
- Fast assembly to PCB
- Contacts with pin: locking directly on the PCB
- Contacts without pin: fast positioning with plastic adapter

Derating

Current carrying capacity

The current carrying capacity of the connectors is limited by the thermal load capability of the contact element material including the connections and the insulating parts. The derating curve is therefore valid for currents which flow constantly (non-intermittent) through each contact element of the connector evenly, without exceeding the allowed maximum temperature.

Measuring and testing techniques acc. to IEC 60512-5-2

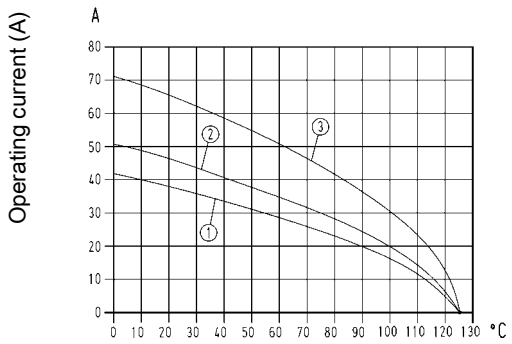

Ambient temperature (C°)

① Wire cross section 4 mm²
② Wire cross section 6 mm²
③ Wire cross section 10 mm²

Technical characteristics

Material (locking lever)	copper alloy, surface finish: passivation
Material (contact)	copper alloy

Details

Board thickness 1.6 ... 3.2 mm

Clearance and creepage distances have to be considered for the printed circuit board

Stripping length 7.5 mm

Finished hole d= 4.4 mm +0.05/-0.04

The new connection of wires to the PCB offers optimized PCB design, combined with outstanding contact qualities.

The Han-Fast® Lock is flexible and allows a fast and simple PCB connection. The PCB has one drilled hole and a pad.

The inner surface of the plated drilled hole serves as the interface. The Han-Fast® Lock is simply inserted into the plated through contact hole. The locking pin is pushed in and hence locks the contact into position.

The solder free connection technique is easy to handle and to operate. Maintenance has been made simple with the facility to detach the contact.

Han-Fast® Lock also supports SMD assembly of the PCB.

- Current up to 60 Amps
- Standard drilled hole with pad
- Position independent of connector
- Solder free PCB termination
- Easy locking solution
- Pull out force ≥ 340 N

Han-Fast® Lock

Identification	Wire cross section (mm²)	Part number	Drawing Dimensions in mm
Han-Fast® Lock, Single contact, without pin, silver plated contacts, contact resistance <2 mOhm	4 – 6 10	09 08 000 7923 09 08 000 7924	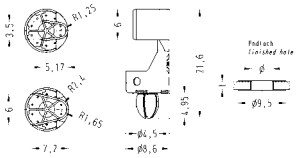
Han-Fast® Lock, Contacts on a reel, without pin, silver plated contacts, contact resistance <2 mOhm	4 – 6 10	09 08 000 6923 09 08 000 6924	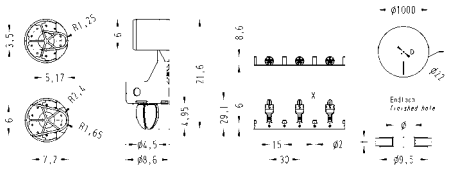
Han-Fast® Lock, Single contact, with pin, silver plated contacts, contact resistance <2 mOhm	4 – 6 10	09 08 000 7123 09 08 000 7124	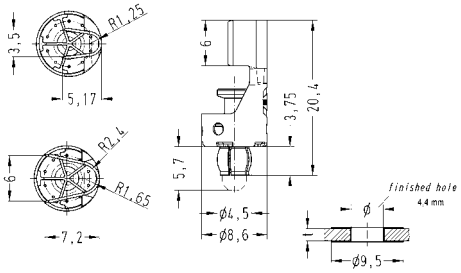
Han-Fast® Lock, Single contact, with angled pin, silver plated contacts, contact resistance <2 mOhm	1.5 – 2.5	09 08 000 7222	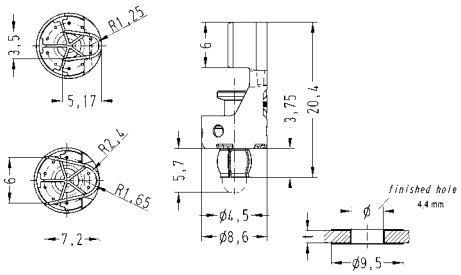
Han-Fast® Lock, Contacts on a reel, with pin, silver plated contacts, contact resistance <2 mOhm	4 – 6 10	09 08 000 6123 09 08 000 6124	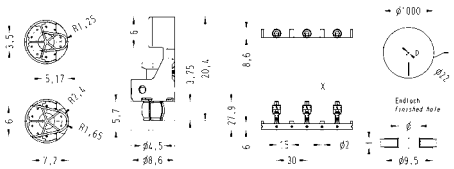

PCB

Features

- Robust design
- Suitable for standard and EMC housings
- Low wiring costs
- High density of contacts

Technical characteristics

Electrical data acc. to IEC 61984	**7.5 A 250 V 4 kV 3**
Rated current	7.5 A
Rated voltage	250 V
Rated impulse voltage	4 kV
Pollution degree	3
Material (insert)	polyamide
Material (contact)	copper alloy

Specifications and approvals

IEC 60664-1
IEC 61984

Details

Crimping tools see chapter 90

Modules see chapter 06

Han DD® crimp inserts see chapter 02
Han® B housings (bulkhead mounting) see chapter 31

PCB adapter for Han DD® crimp inserts

Identification	Part number male	Part number female	Drawing Dimensions in mm
Han D®, to connect the PCB adapter, Double contact, silver plated contacts, contact resistance ≤3 mOhm 	09 15 000 6191	09 15 000 6291	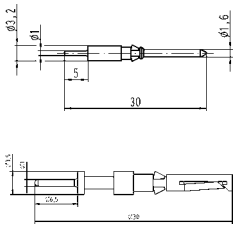
PCB adapter, for PCB´s up to 1.6 mm, in the Han DD® crimp insert, in the Han DD® module, in the Han® DDD module (different electrical data: 7.5 A 160 V 2.5 kV 3) 	09 16 000 9905	09 16 000 9905	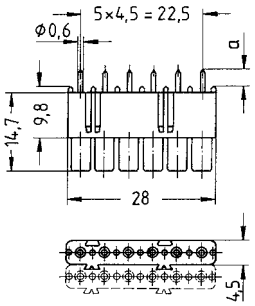 09 16 000 9905 a= 2.6 09 16 000 9908 a= 3.4
PCB adapter, for PCB´s up to 2.4 mm, in the Han DD® crimp insert, in the Han DD® module 	09 16 000 9908	09 16 000 9908	

PCB

PCB adapter for Han DD® module

Identification	Part number male	Part number female	Drawing Dimensions in mm
Han D®, to connect the PCB adapter, Double contact, silver plated contacts, contact resistance ≤3 mOhm 	09 15 000 6191	09 15 000 6294	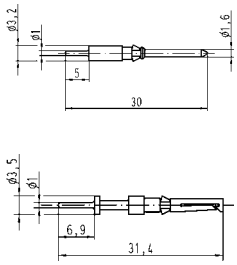
PCB adapter, for PCB´s up to 1.6 mm, in the Han DD® crimp insert, in the Han DD® module, in the Han® DDD module (different electrical data: 7.5 A 160 V 2.5 kV 3) 	09 16 000 9905	09 16 000 9905	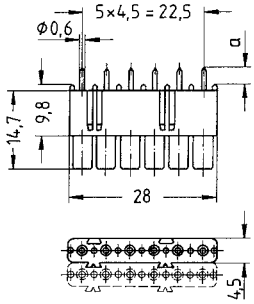 09 16 000 9905 a= 2.6 09 16 000 9908 a= 3.4
PCB adapter, for PCB´s up to 2.4 mm, in the Han DD® crimp insert, in the Han DD® module 	09 16 000 9908	09 16 000 9908	

PCB

PCB adapter for Han® DDD module

Features

- Robust design
- Suitable for standard and EMC housings
- Low wiring costs
- High density of contacts

Technical characteristics

Electrical data acc. to IEC 61984	**7.5 A 160 V 2.5 kV 3** **7.5 A 250 V 4 kV 3**
Rated current	7.5 A
Rated voltage	160 V, 250 V
Rated impulse voltage	2.5 kV, 4 kV
Pollution degree	3
Material (insert)	polyamide
Material (contact)	copper alloy

Specifications and approvals

IEC 60664-1
IEC 61984

Details

Crimping tools see chapter 90

Modules see chapter 06

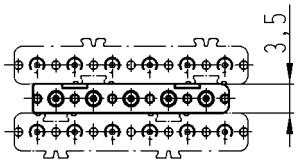

For a 17 pin PCB termination with the Han® DDD module two 6 pin and one 5 pin PCB adapters are necessary.
(electrical data: 7.5 A 160 V 2.5 kV 3)

PCB adapter for Han® DDD module

Identification	Part number male	Part number female	Drawing Dimensions in mm
Han D®, to connect the PCB adapter, Double contact, silver plated contacts, contact resistance ≤3 mOhm 	09 15 000 6197	09 15 000 6291	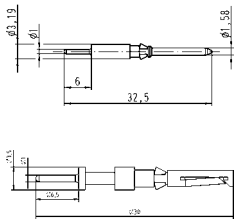
PCB adapter, 5 pins, for PCB´s up to 1.6 mm, in the Han® DDD module	09 16 000 9915	09 16 000 9915	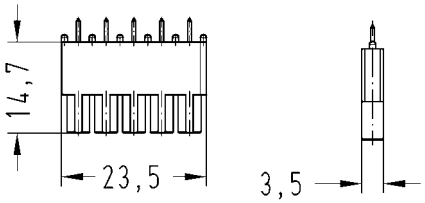
PCB adapter, for PCB´s up to 1.6 mm, in the Han DD® crimp insert, in the Han DD® module, in the Han® DDD module (different electrical data: 7.5 A 160 V 2.5 kV 3) 	09 16 000 9905	09 16 000 9905	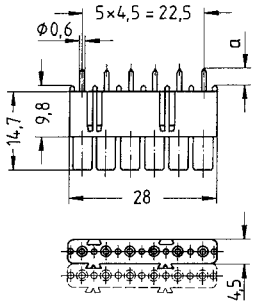 09 16 000 9905 a= 2.6 09 16 000 9908 a= 3.4

PCB

PCB adapter for Han® 40 A Axial module

Features

- Modular assembly
- Robust design
- Suitable for standard and EMC housings
- Low wiring costs

Technical characteristics

Electrical data acc. to IEC 61984	**40 A 500 V 6 kV 3**
Rated current	40 A
Rated voltage	500 V
Rated impulse voltage	6 kV
Pollution degree	3
Material (insert)	polycarbonate
Material (contact)	copper alloy

Specifications and approvals

IEC 60664-1
IEC 61984

Details

Hinged frames see chapter 06

PCB adapter for Han® 40 A Axial module

Identification	Part number male	Part number female	Drawing Dimensions in mm
Han® C, Solder contact, contact resistance ≤3 mOhm	09 32 000 6295		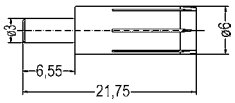
PCB adapter, in the Han® 40 A Axial module	09 14 002 2603	09 14 002 2703	

Features

- Robust design
- Suitable for standard and EMC housings
- Low wiring costs
- Counter connector available with screw, crimp or cage clamp termination

Technical characteristics

Electrical data acc. to IEC 61984	**16 A 500 V 6 kV 3**
Rated current	16 A
Rated voltage	500 V
Rated impulse voltage	6 kV
Pollution degree	3
Material (insert)	polycarbonate
Material (contact)	copper alloy

Specifications and approvals

IEC 60664-1
IEC 61984

Details

Crimping tools see chapter 90

Han E® crimp inserts see chapter 03
Hoods/housings see chapter 31

PCB adapter for Han E®

Identification	Part number male	Part number female	Drawing Dimensions in mm
Han E®, to connect the PCB adapter, Double contact, contact resistance ≤3 Ohm	09 33 000 6180	09 33 000 6280	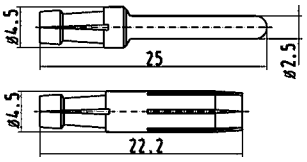
PCB adapter, in the Han E® crimp insert	09 33 000 9996	09 33 000 9996	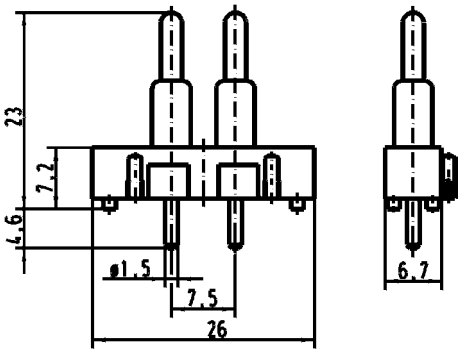

PCB

PCB adapter for Han® Q 4/2

Features

- Robust design
- Low wiring costs
- High density of contacts
- Suitable for Han-Compact® hoods and housings

Technical characteristics

Electrical data acc. to IEC 61984	**30 A 400/690 V 6 kV 2**
Rated current	30 A
Rated voltage conductor - ground	400 V
Rated voltage conductor - conductor	690 V
Rated impulse voltage	6 kV
Pollution degree	2
Electrical data, signal	**7.5 A 250 V 4 kV 2**
Rated current	7.5 A
Rated voltage	250 V
Rated impulse voltage	4 kV
Limiting temperatures	-40 °C ... 125 °C
Flammability (hoods/housings) acc. to UL 94	V 0
Flammability (locking lever) acc. to UL 94	V 0
Protection class acc. to UL 50	NEMA type 4/4X/12
Degree of protection acc. to IEC 60529	IP65 / IP67
Material (insert)	LCP
Material (hoods/housings)	polycarbonate
Colour (hoods/housings)	RAL 9005 (black)
Material (locking lever)	polyamide
Colour (locking lever)	RAL 9005 (black)
Material (seal)	NBR
Material (contact)	copper alloy

Specifications and approvals

IEC 60664-1
IEC 61984

Details

Han® Q inserts see chapter 13

Crimping tools see chapter 90

PCB adapter for Han® Q 4/2

Identification	Part number male	Part number female	Drawing Dimensions in mm
Han D®, to connect the PCB adapter, Double contact, silver plated contacts, contact resistance ≤3 mOhm 	09 15 000 6191	09 15 000 6293	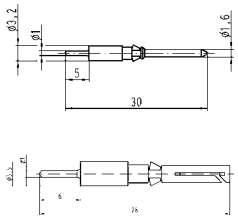
Han® C, to connect the PCB adapter, Double contact, contact resistance ≤3 mOhm 	09 32 000 6180	09 32 000 6280	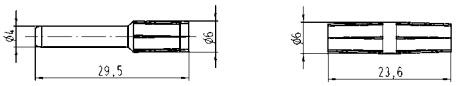
PCB adapter, for PCB´s up to 2.4 mm, in the Han® Q 4/2 	09 12 006 9901	09 12 006 9901	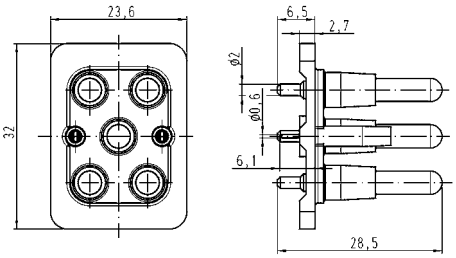

PCB

Plastic hoods/housings for industrial applications
double locking lever

Identification	Part number	Drawing Dimensions in mm
Han-Compact®, Bulkhead mounted housings, straight version	09 12 008 0327	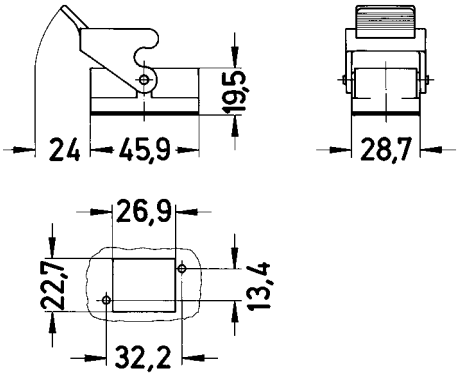

PCB adapter for Han® Q 5/0

Features

- Robust design
- Suitable only for EMC housings size Han® 3 A
- Additional robust and secure PE-connection between housing and PCB

Technical characteristics

Electrical data acc. to IEC 61984	**10 A 230/400 V 4 kV 3**
Rated current	10 A
Rated voltage conductor - ground	230 V
Rated voltage conductor - conductor	400 V
Rated impulse voltage	4 kV
Pollution degree	3
Limiting temperatures	-40 °C ... 125 °C
Flammability (locking lever) acc. to UL 94	V 0
Protection class acc. to UL 50	NEMA type 4/4X/12
Degree of protection acc. to IEC 60529	IP44 / IP67 is achieved with seal screw 09 20 000 9918
Material (insert)	polycarbonate
Material (hoods/housings)	zinc die-cast
Surface (hoods/housings)	unpainted
Material (locking lever)	steel, zinc-plated
Material (seal)	NBR
Material (contact)	copper alloy

Specifications and approvals

IEC 60664-1
IEC 61984
GL

Details

Han® Q inserts see chapter 13

Crimping tools see chapter 90

PCB adapter for Han® Q 5/0

Identification	Part number male	Part number female	Drawing Dimensions in mm
Han E®, to connect the PCB adapter, Solder contact, silver plated contacts, contact resistance ≤3 Ohm 	09 33 000 6195	09 33 000 6295	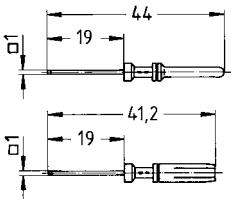
Han® Q, PCB adapter, 5 pins, in the Han® Q 5/0 	09 12 000 9905	09 12 000 9905	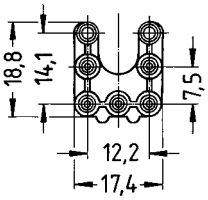 Adapter PE contact panel 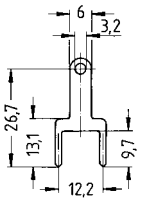

PCB

PCB adapter for Han® Q 5/0

Size 3 A

Hoods/Housings for higher EMC requirements
double locking lever

Identification	Part number	Drawing Dimensions in mm
Han® EMV, Bulkhead mounted housings	09 62 003 0304	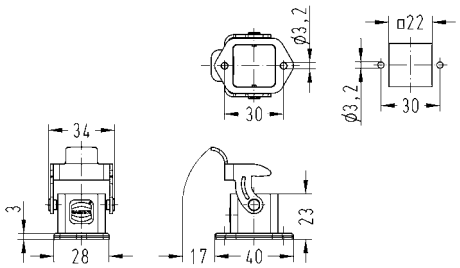

PCB

PCB adapter for Han® Q 7/0

Features

- Robust design
- Suitable for standard and EMC housings
- High density of contacts

Technical characteristics

Electrical data acc. to IEC 61984	**7.5 A 250 V 4 kV 3**
Rated current	7.5 A
Rated voltage	250 V
Rated impulse voltage	4 kV
Pollution degree	3
Limiting temperatures	-40 °C ... 125 °C
Degree of protection acc. to IEC 60529	IP44 / IP67 is achieved with seal screw 09 20 000 9918
Material (insert)	polycarbonate
Material (hoods/housings)	zinc die-cast
Surface (hoods/housings)	powder-coated
Colour (hoods/housings)	RAL 7037 (grey)
Material (locking lever)	steel, zinc-plated
Material (seal)	NBR
Material (contact)	copper alloy

Specifications and approvals

IEC 60664-1
IEC 61984
GL

Details

Han® Q inserts see chapter 13

Crimping tools see chapter 90

PCB adapter for Han® Q 7/0

Identification	Part number male	Part number female	Drawing Dimensions in mm
Han D®, to connect the PCB adapter, Double contact, silver plated contacts, contact resistance ≤3 mOhm 	09 15 000 6190	09 15 000 6290	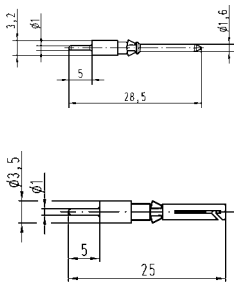
PCB adapter, for PCB´s up to 2.4 mm, in the Han® Q 7/0 	09 12 000 9908	09 12 000 9908	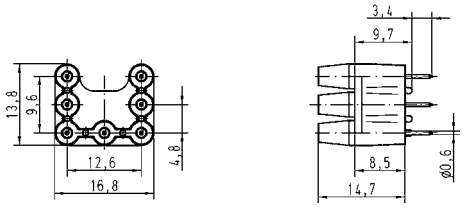

PCB

PCB adapter for Han® Q 7/0

Size 3 A

Metal hoods/housings for industrial applications
double locking lever

Identification	Part number	Drawing Dimensions in mm
Han A® , Bulkhead mounted housings, straight	09 20 003 0301	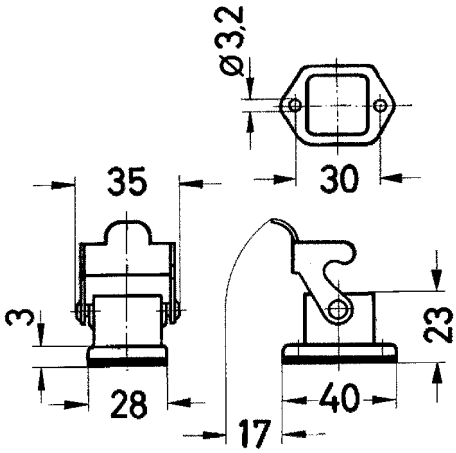 Panel cut out 22 x 22 mm

PCB

PCB adapter for Han® Q 8/0

Features

- Robust design
- Suitable for Han-Compact® hoods and housings
- Low wiring costs
- High density of contacts

Technical characteristics

Electrical data acc. to IEC 61984	**16 A 230/400 V 4 kV 2**
Rated current	16 A
Rated voltage conductor - ground	230 V
Rated voltage conductor - conductor	400 V
Rated impulse voltage	4 kV
Pollution degree	2
Limiting temperatures	-40 °C ... 125 °C
Flammability (hoods/housings) acc. to UL 94	V 0
Flammability (locking lever) acc. to UL 94	V 0
Protection class acc. to UL 50	NEMA type 4/4X/12
Degree of protection acc. to IEC 60529	IP65 / IP67
Material (insert)	LCP
Material (hoods/housings)	polycarbonate
Colour (hoods/housings)	RAL 9005 (black)
Material (locking lever)	polyamide
Colour (locking lever)	RAL 9005 (black)
Material (seal)	NBR
Material (contact)	copper alloy

Specifications and approvals

IEC 60664-1
IEC 61984

Details

Han® Q inserts see chapter 13

Crimping tools see chapter 90

PCB adapter for Han® Q 8/0

Identification	Part number male	Part number female	Drawing Dimensions in mm
Han E®, to connect the PCB adapter, Double contact, contact resistance ≤3 Ohm 	09 33 000 6180	09 33 000 6280	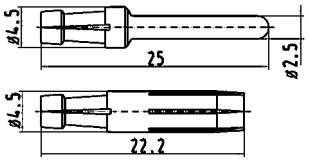
Han® Q, PCB adapter, for PCB´s up to 1.6 mm, in the Han® Q 8/0 	09 12 008 9901	09 12 008 9901	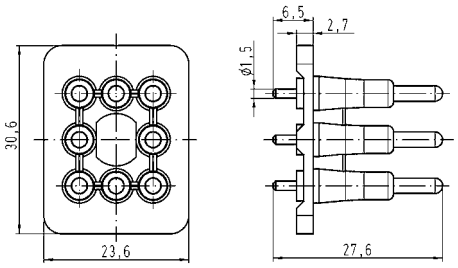

PCB

Plastic hoods/housings for industrial applications
double locking lever

Identification	Part number	Drawing Dimensions in mm
Han-Compact®, Bulkhead mounted housings, straight version	09 12 008 0327	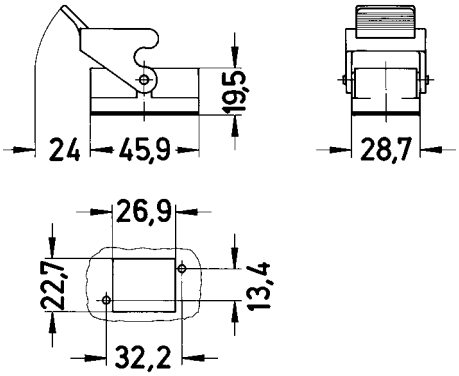

Features

- Robust design
- Suitable for standard and EMC housings
- High density of contacts

Derating

Current carrying capacity

The current carrying capacity of the connectors is limited by the thermal load capability of the contact element material including the connections and the insulating parts. The derating curve is therefore valid for currents which flow constantly (non-intermittent) through each contact element of the connector evenly, without exceeding the allowed maximum temperature.

Measuring and testing techniques acc. to IEC 60512-5-2

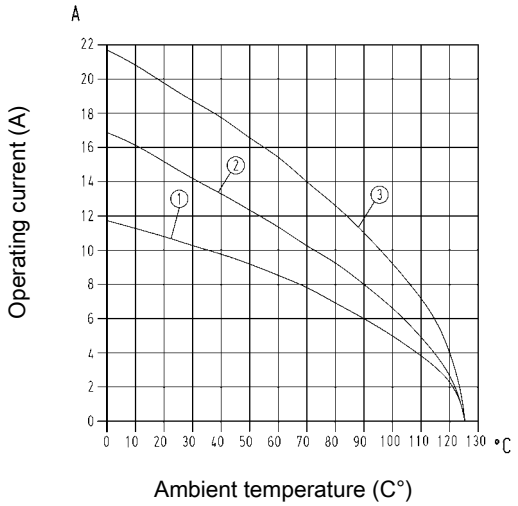

① Wire cross section 0.75 mm²
② Wire cross section 1.5 mm²
③ Wire cross section 2.5 mm²

Technical characteristics

Contacts	12/0
Electrical data acc. to IEC 61984	**7.5 A 250 V 4 kV 3**
Rated current	7.5 A
Rated voltage	250 V
Rated impulse voltage	4 kV
Pollution degree	3
Insulation resistance	≥10^{10} Ohm
Limiting temperatures	-40 °C ... 125 °C
Flammability (insert) acc. to UL 94	V 0
Mating cycles	≥500
Flammability (seal) acc. to UL 94	V 0
Material (insert)	polycarbonate
Colour (insert)	RAL 7032 (light grey)
Material (contact)	copper alloy

Specifications and approvals

IEC 60664-1
IEC 61984

Details

Crimping tools see chapter 90

PCB adapter for Han® Q 12/0

Size 3 A

Number of contacts

12/0+ ⏚

250 V
7.5 A

Identification	Part number male	Part number female	Drawing Dimensions in mm
Han® Q, Solder terminal, for PCB adapter Please order contacts separately.	09 12 012 3002	09 12 012 3102	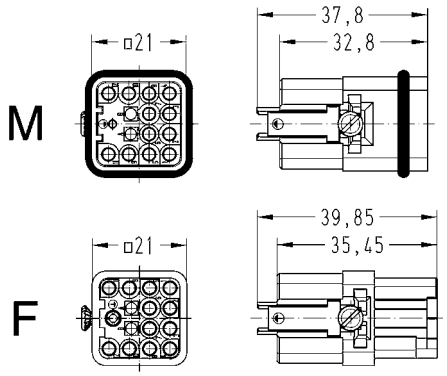
Han D®, to connect the PCB adapter, Double contact, silver plated contacts, contact resistance ≤3 mOhm 	09 15 000 6191	09 15 000 6297	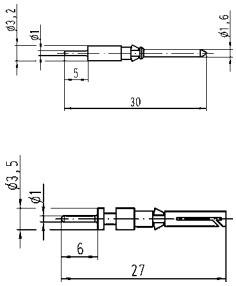
PCB adapter, for PCB´s up to 2.4 mm 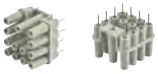	09 12 012 9901	09 12 012 9901	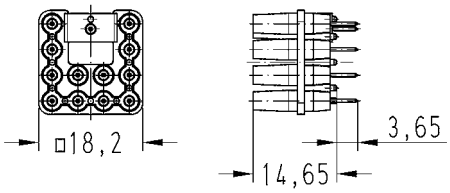

PCB

- Secondary mating between industrial connector and printed circuit board.
- No higher force is applied on the soldering joint when mating the industrial connector due to an additional mating point.
- No wiring between printed circuit board and industrial connector necessary.
- This means no wiring faults ➪ no testing, no costs
- Connecting times are minimized.
- Easy handling is time and cost saving.
- The production of mechanical and electrical / electronically components can be completely separated.
- Possibility to reach a higher degree of automation in the production (e.g. wave soldering of the PCBs).

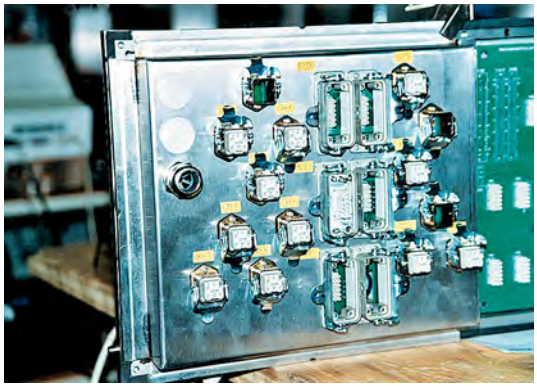

Han DD® and Han® Q 5/0 PCB adapter
Wilhelm Fette GmbH, Germany

Han E® PCB adapter

① PCB adapter for Han E®
② Han E® connector in a bulkhead mounted housing
③ Switch board panel
④ Printed circuit board (PCB)

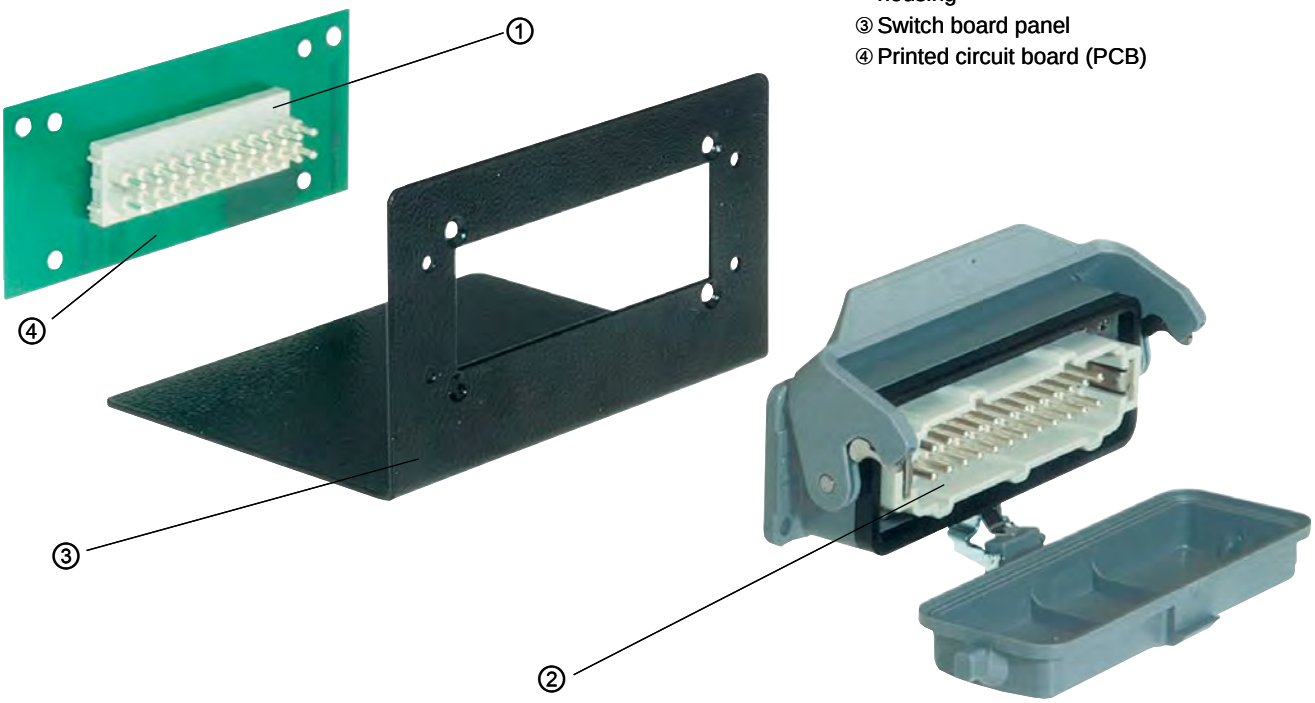

Contents | Page

Inserts for: Han-*Yellock*® 10	**25.7**
Inserts for: Adapter frames	**25.9**
Quick Lock module	**25.11**
Crimp module	**25.13**
Multiplier	**25.15**
Adapter frames	**25.19**
Monoblocks	**25.22**
Han-*Yellock*® 10 hoods/housings	**25.25**
Han-*Yellock*® 30 hoods/housings	**25.28**
Han-*Yellock*® 60 hoods/housings	**25.35**
Accessories	**25.42**

Description of the Han-*Yellock*® system

The Han-*Yellock*® - a special Han® connector

Han-*Yellock*® is a new product series which retains the core functionality but differs significantly from current size and shape formats. The approach of this series makes many new functions possible, for example:

- An internal, latched locking mechanism on the hood
- Multiplies the potentials in the connector with Han-*Yellock*® modules
- Usage of Han-Modular® modules with adapter frames
- Insulators can snap into the front or back walls of the housing
- Protected Earth contact (PE) in crimp or Quick Lock termination

These new technical features encourage sustained and effective improvements:
when purchasing products –

- Less article numbers and less inventory,

when planning for the electrical and mechanical layout –

- Less wiring work within a machine,

during the work flow –

- Less steps in the work flow and quicker assembly,

and during the after-sales stage –

- Reduced down times because of the latched locking mechanism and maintenance-friendly design

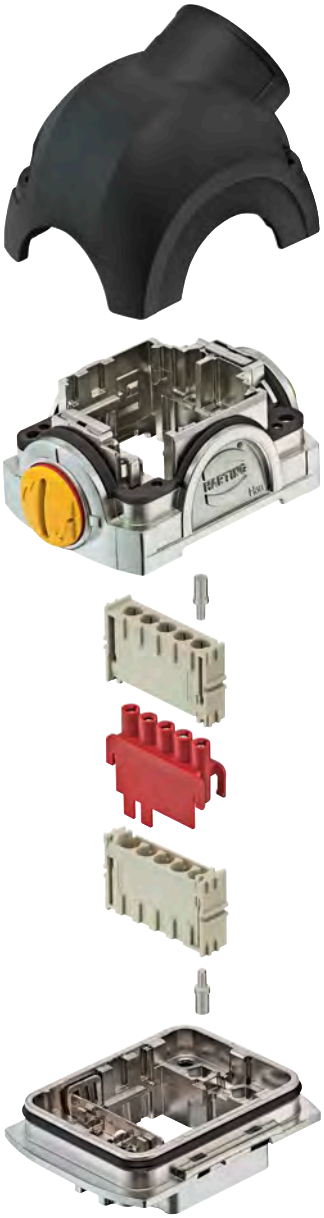

Assembly details

Design overview

The Han-*Yellock*® interface consists of a housing, bulkhead mounting, on the housing side and a carrier hood with cover on the cable side.
Han-*Yellock*® offers the following features when assembling components:

- Han-*Yellock*® modules require only male crimp contacts.
- The PE is contacted on the housing; it can be connected with crimp and/or Quick Lock contacts.
- The Han-*Yellock*® hoods/housing are not plug-compatible with all other Han® hood/housing series.

The Han-*Yellock*® system can be used with a variety of insulators and contact inserts in order to establish an interface.

The Locking

The locking ability is a key function of the Han-*Yellock*®. The function makes connections and disconnections safe, simple and quick – even under harsh industrial conditions.

Main advantages include:

- Easy handling
- Resistance to vibrations and shock
- Protected against accidental opening
- Compact, space-saving design

Han-*Yellock*® features a patented internal locking mechanism. The locking takes place as the cable and device sides are simply joined together. A red ring around the perimeter of the push button will be visible if the housing halves do not snap together properly. This ring disappears as soon as the internally protected stainless steel springs snap into place.

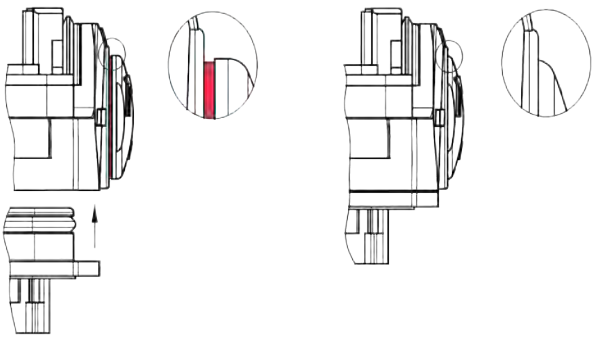

① ②

① unlocked
② locked

This press-button locking also features an integrated blocking function. The locking mechanism can be locked by rotating the button 90°. It is then no longer possible to open the connector.

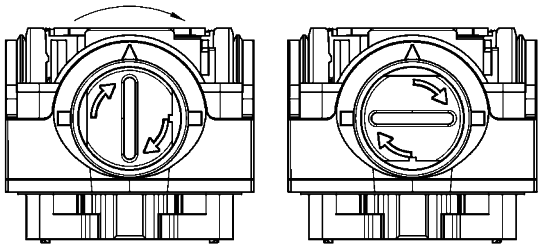

„open“ „blocked“

The press button can be set back to its visually open position only after the button is turned back 90°. It is then possible to release the two housing halves by pressing the snap-in button.

This feature provides an elegant mechanism for preventing an accidental opening of the connector – and no additional components are needed for it.

Han-*Yellock*® modules

This new product series enables an improved approach and strategy for electrical planning and procurement.

For assembling the Han-*Yellock*® connector only male crimp contacts are needed. The conduct between the two male contacts is made by multipliers.

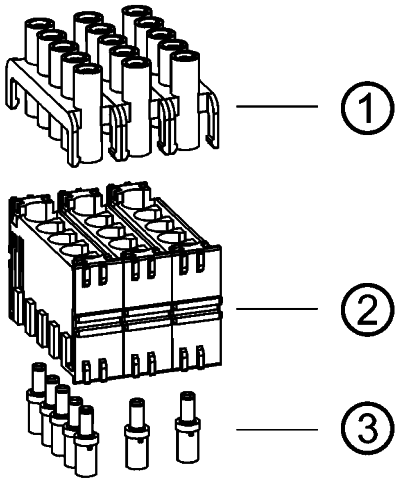

① multiplier
② Han-*Yellock*® module
③ Han-*Yellock*® crimp contacts

This concept allows a 1:1 wire to wire arrangement and in additon the use of bridges. Two to five contacts can be arranged.

It does not matter if the bridge attachment is inserted on the cable side or the housing side of the connector.

In the past, terminals blocks have been responsible for the function of multiplying potentials. But now this function has been integrated into the connector for a quick, compact and easy-to-service solution.

Inserting the module into the hoods/housing

- The Han-*Yellock*® module should only be inserted into the „A“ plug-in position in the metal clamp.

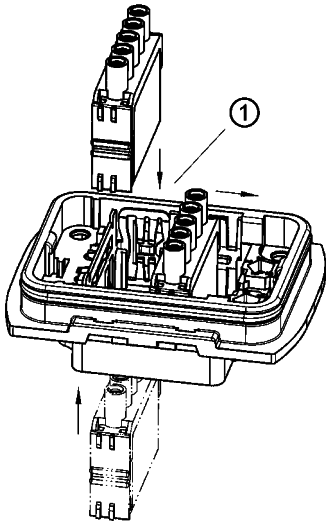

① plug-in position „A“

- The illustration shows the orientation of the module (see arrangement of contacts 1 ... 5).

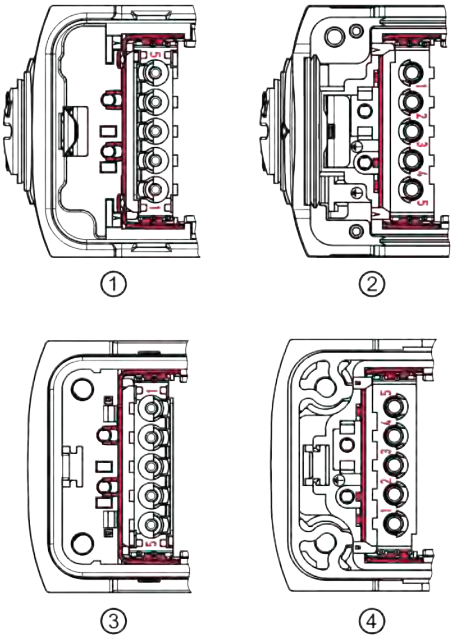

① Carrier hood, mating side
② Carrier hood, connection side
③ Housing, bulkhead mounting, mating side
④ Housing, bulkhead mounting, connection side

- A distinct click can be heard when the module snaps into position. It is then pushed along the rail to its final position. The plug-in slots must always be completely filled.

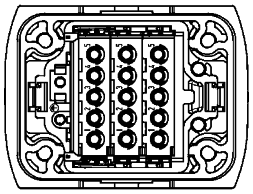

Disassembling the Han-*Yellock*® module

- The removal tool (part no. 11 99 000 0001) is required to take out the module.
- The following illustration shows how to insert the removal tool into the metal clamp. The tool should then be pressed down until it reaches the end stop.
- The tool is then pulled back and the module comes out of the housing.
- The removal can be made from the connection side as well as from the mating side.

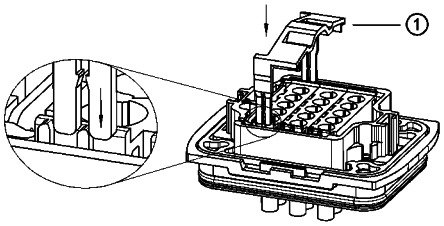

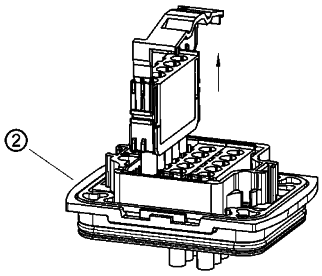

① removal tool
② housing, bulkhead mounting

The process is identical for both housings, bulkhead mounting, and carrier hoods.

The removal tool can be stored on the carrier hood:

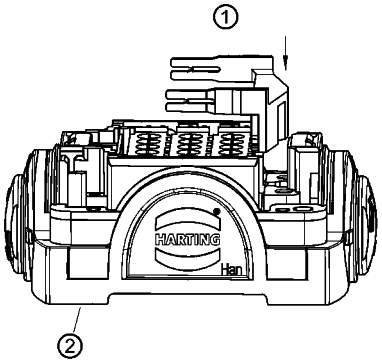

① removal tool
② carrier hood

Han-*Yellock*® adapter frame

Han-Modular® series interfaces can be established using the Han-*Yellock*® adapter frame. The connection is based on a male/female contact arrangement.

Inserting the adapter frame in the housing:

- The adapter frame can be snapped into the housing, bulkhead mounting, on the termination side and the mating side (refer to the illustration).
- The lateral plastic tabs („B“) are pressed into the metal clamps on the housing.
- The adapter frame then snaps in with a distinctly audible click.

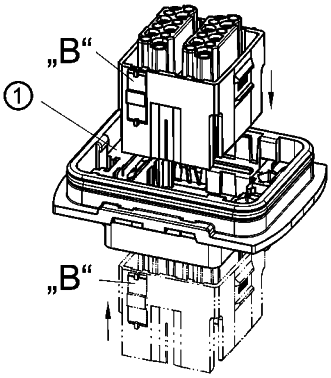

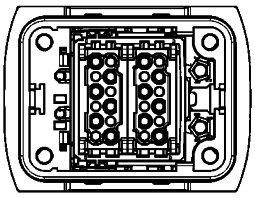

① metal clamp

Removal the adapter frame:

- The removal tool part no. 11 99 000 0001 is required for disassembly.
- The removal tool is inserted into the metal clamp and pressed down as shown in the following illustration. A screwdriver need also be placed into the notch in the housing.
- The removal tool should then be pulled outwards to remove the adapter frame from the housing.
- The removal can be made from the termination side as well as from the mating side.
- The process is identical for both housings, bulkhead mounting, and carrier hoods.

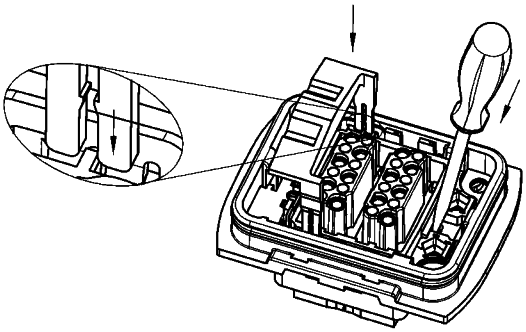

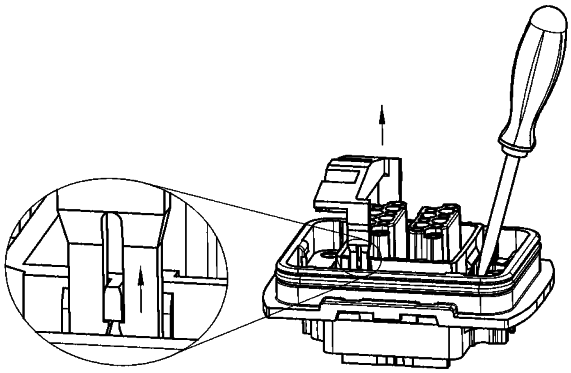

Han-*Yellock*® Protection covers

Protection cover function

To protect the insert against dust and water it is possible to use a Han-*Yellock*® protection cover.

The protection cover comes with a metal bearing pedestal and can be installed during initial or retrofit installation.

The Han-*Yellock*® design offer the possibility to snap in the pedestal either on the left or on the right side of the housing.

The direction of the cover movement can flip without turning the housing and inserts.

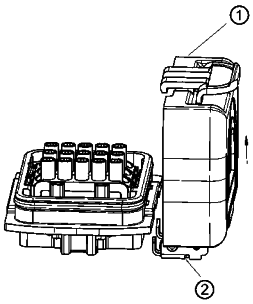

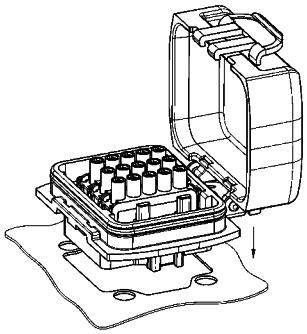

① cover
② bearing pedestal

Han-*Yellock*® Ground terminal

Ground terminal assembly

On the housing side ground terminals can be used.

After placing the frame deeply inside the housing slots the housing will be fixed to the panel leading to solid mounting of the complete set.

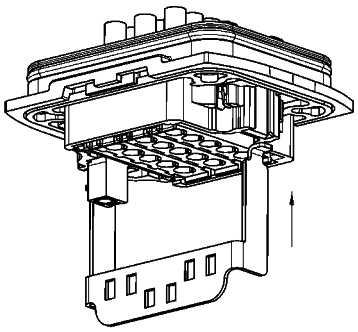

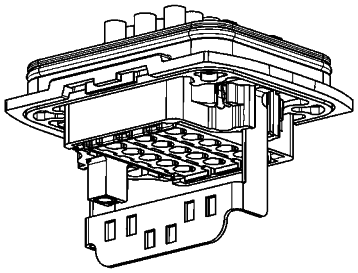

Inserts for: Han-*Yellock*® 10

Series	Han® 3 A	Han® 3 A Quick Lock	Han® 3 A Quick Lock	Han® 4 A
Number of contacts	3 + ⏚	3 + ⏚	3 + ⏚	4 + ⏚
Termination	Screw terminal	Quick Lock termination	Quick Lock termination	Screw terminal
Rated current Rated voltage Wire gauge	10 A 230 / 400 V 1 ... 2.5 mm²	10 A 230 / 400 V 0.5 ... 2.5 mm²	10 A 230 / 400 V 0.25 ... 1.5 mm²	10 A 230 / 400 V 1 ... 2.5 mm²
Male insert (M)	09 20 003 2611	09 20 003 2633	09 20 003 2634	09 20 004 2611
Female insert (F)	09 20 003 2711	09 20 003 2733	09 20 003 2734	09 20 004 2711

Series	Han® 4 A Quick Lock	Han® 4 A Quick Lock	Han® 8 D	Han® 8 D Quick Lock
Number of contacts	4 + ⏚	4 + ⏚	8	8
Termination	Quick Lock termination	Quick Lock termination	Crimp terminal	Quick Lock termination
Rated current Rated voltage Wire gauge	10 A 230 / 400 V 0.5 ... 2.5 mm²	10 A 230 / 400 V 0.25 ... 1.5 mm²	10 A ~ 50 V / – 120 V 0.14 ... 2.5 mm²	10 A ~ 50 V / – 120 V 0.25 ... 1.5 mm²
Male insert (M)	09 20 004 2633	09 20 004 2634	09 36 008 3001	09 36 008 2632
Female insert (F)	09 20 004 2733	09 20 004 2734	09 36 008 3101	09 36 008 2732

Series	Han® Q 2/0	Han® Q 2/0	Han® Q 2/0	Han® Q 2/0
Number of contacts	2 + ⏚	2 + ⏚	2 + ⏚	2 + ⏚
Termination	Axial screw terminal	Axial screw terminal	Crimp terminal	Axial screw terminal
Rated current Rated voltage Wire gauge	40 A 400 V 2.5 ... 6 mm²	40 A 400 V 4 ... 10 mm²	40 A 400 V 1.5 ... 10 mm²	40 A 830 V 2.5 ... 6 mm²
Male insert (M)	09 12 002 2653	09 12 002 2651	09 12 002 3051	09 12 002 2654
Female insert (F)	09 12 002 2753	09 12 002 2751	09 12 002 3151	09 12 002 2754

Inserts for: Han-*Yellock*® 10

Series	Han® Q 2/0	Han® Q 2/0	Han® Q 3/0	Han® Q 5/0
Number of contacts	2 + ⏚	2 + ⏚	3 + ⏚	5 + ⏚
Termination	Axial screw terminal	Crimp terminal	Crimp terminal	Crimp terminal
Rated current Rated voltage Wire gauge	40 A 830 V 4 ... 10 mm²	40 A 830 V 1.5 ... 10 mm²	40 A 400 V 1.5 ... 10 mm²	16 A 230 / 400 V 0.14 ... 2.5 mm²
Male insert (M)	09 12 002 2652	09 12 002 3052	09 12 003 3051	09 12 005 3001
Female insert (F)	09 12 002 2752	09 12 002 3152	09 12 003 3151	09 12 005 3101

Series	Han® Q 5/0 Quick Lock	Han® Q 7/0	Han® Q 12/0	
Number of contacts	5 + ⏚	7 + ⏚	12 + ⏚	
Termination	Quick Lock termination	Crimp terminal	Crimp termination/ Quick Lock termination	
Rated current Rated voltage Wire gauge	16 A 230 / 400 V 0.5 ... 2.5 mm²	10 A 400 V 0.14 ... 2.5 mm²	10 A 400 V 0.14 ... 2.5 mm²	
Male insert (M)	09 12 005 2633	09 12 007 3001	09 12 012 3001	
Female insert (F)	09 12 005 2733	09 12 007 3101	09 12 012 3101	

Series	Han-Brid® RJ45 C	Han-Brid® RJ45 C	Han-Brid® RJ45 C	Han-Brid® RJ45 C
Number of contacts	2 / 8	2 / 8	2 / 8	2 / 8
Termination	Crimp terminal / RJ45	Crimp terminal / RJ45	Crimp terminal / RJ45	Crimp terminal / RJ45
Rated current Rated voltage Wire gauge	10 A 24 V 0.14 ... 2.5 mm²	10 A 24 V 0.14 ... 2.5 mm²	10 A 24 V 0.14 ... 2.5 mm²	10 A 24 V 0.14 ... 2.5 mm²
Male insert (M)	09 12 003 3021	09 12 003 3031		
Female insert (F)			09 12 003 2774	09 12 003 2776

Inserts for: Adapter frames

Series	Han® CC Protected module	Han® CD module	Han E® module	Han® E Quick Lock module
Number of contacts	4	3	6	6
Modules	Crimp terminal	Crimp terminal	Crimp terminal	Quick Lock termination
Rated current	40 A	40 A	16 A	16 A
Rated voltage	830 V	830 V	500 V	500 V
Wire gauge	1.5 ... 6 mm²	1.5 ... 6 mm²	0.14 ... 4 mm²	0.5 ... 2.5 mm²

Series	Han® EE module	Han® EE Quick Lock module	Han E® Protected module	Han® EEE module
Number of contacts	8	8	6	20
Modules	Crimp terminal	Quick Lock termination	Crimp terminal	Crimp terminal
Rated current	16 A	16 A	16 A	16 A
Rated voltage	400 V	400 V	830 V	500 V
Wire gauge	0.14 ... 4 mm²	0.5 ... 2.5 mm²	0.14 ... 4 mm²	0.14 ... 4 mm²

Series	Han® ES module	Han DD® module	Han DD® Quick Lock module	Han® DDD module
Number of contacts	5	12	12	17
Modules	Cage-clamp terminal	Crimp terminal	Quick Lock termination 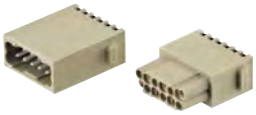	Crimp terminal 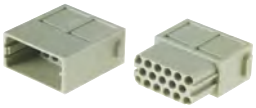
Rated current	16 A	10 A	10 A	10 A
Rated voltage	400 V	250 V	250 V	160 V
Wire gauge	0.14 ... 2.5 mm²	0.14 ... 2.5 mm²	0.25 ... 1.5 mm²	0.14 ... 2.5 mm²

Series	Han® High Density module	Han® D-Sub module		
Number of contacts	25	9		
Modules	Crimp terminal	Crimp terminal		
Rated current	4 A	5 A		
Rated voltage	50 V	50 V		
Wire gauge	0.08 ... 0.52 mm²	0.08 ... 0.52 mm²		

for more technical details see chapter 06

Inserts for: Adapter frames

Series	Han® USB module	Han® GigaBit module		
Number of contacts	4	8		
Modules	USB 2.0	Ethernet Cat. 6		

Series	Han-Quintax® module				Han® Multi module
Number of contacts	2				
Modules					
Contacts	Han-Quintax® contact 4 + shielding	High Density Quintax contact 8 + shielding	Han D® Coax contact 75 Ω 1 + shielding 75 Ω	Han E® Coax contact 50 Ω 1 + shielding 50 Ω	Coaxial contact 50 Ω RG 174 75 Ω RG 179 50 Ω RG 58

Han-*Yellock*

for more technical details see chapter 06

Features

- Snap-in assembly from mating side and from termination side
- Bus bar within bridge attachements
- Finger safe design
- Fast and tool-less assembly
- Mating compatible to the crimp version

Derating

Current carrying capacity

The current carrying capacity of the connectors is limited by the thermal load capability of the contact element material including the connections and the insulating parts. The derating curve is therefore valid for currents which flow constantly (non-intermittent) through each contact element of the connector evenly, without exceeding the allowed maximum temperature.

Measuring and testing techniques acc. to IEC 60512-5-2

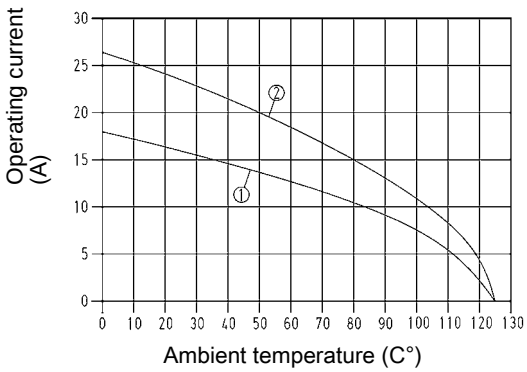

① Wire cross section 1.5 mm²
② Wire cross section 2.5 mm²
for connector with 3 Han-*Yellock*® modules, fully loaded (multiplier 1:1)

Technical characteristics

Contacts	5
Electrical data acc. to IEC 61984	**blue slide** **20 A 500 V 6 kV 3** **black slide** **10 A 500 V 6 kV 3**
Rated current	20 A, 10 A
Rated voltage	500 V
Rated impulse voltage	6 kV
Pollution degree	3
Insulation resistance	≥10^{10} Ohm
Limiting temperatures	-40 °C ... 125 °C
Flammability (insert) acc. to UL 94	V 0
Mating cycles	≥500
Material (insert)	polycarbonate
Colour (insert)	RAL 7032 (light grey)
Material (contact)	copper alloy

Specifications and approvals

IEC 60664-1
IEC 61984

Details

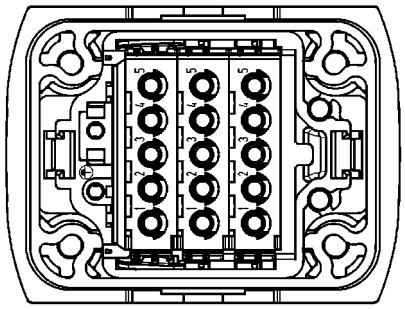

Placement for Han-*Yellock*® 30 with 3 Han-*Yellock*® modules

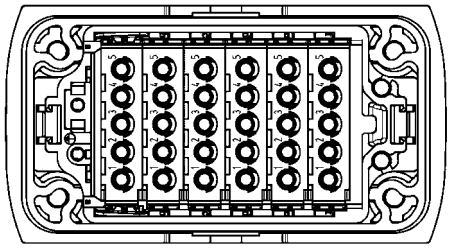

Placement for Han-*Yellock*® 60 with 6 Han-*Yellock*® modules

Quick Lock module

Number of contacts

5

500 V
20 A

Identification	Wire cross section (mm²)	Part number	Drawing Dimensions in mm
Han-Quick Lock® Han-*Yellock*®, Han-Quick Lock® termination, blue slide, silver plated contacts, contact resistance ≤2 mOhm 	0.5 – 2.5	11 05 105 2633	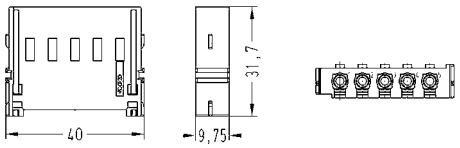 Stripping length 10 mm
Han-Quick Lock® Han-*Yellock*®, Han-Quick Lock® termination, black slide, silver plated contacts, contact resistance ≤2 mOhm 	0.25 – 1.5	11 05 105 2634	

Features

- Snap-in assembly from mating side and from termination side
- Wiring with male contacts only
- Bus bar within bridge attachements
- Finger safe design
- Fast and tool-less assembly

Derating

Current carrying capacity

The current carrying capacity of the connectors is limited by the thermal load capability of the contact element material including the connections and the insulating parts. The derating curve is therefore valid for currents which flow constantly (non-intermittent) through each contact element of the connector evenly, without exceeding the allowed maximum temperature.

Measuring and testing techniques acc. to IEC 60512-5-2

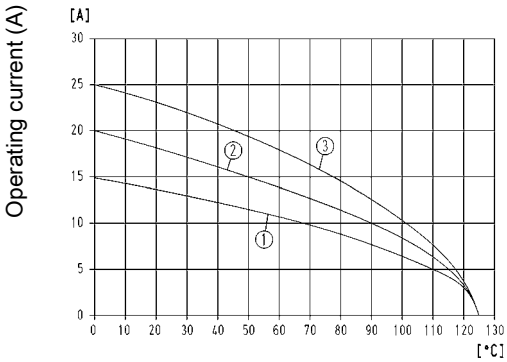

Ambient temperature (C°)

① Wire cross section 1.5 mm²
② Wire cross section 2.5 mm²
③ Wire cross section 4 mm²
for connector with 3 Han-*Yellock*® modules, fully loaded (multiplier 1:1)

Technical characteristics

Contacts	5
Electrical data acc. to IEC 61984	**20 A 500 V 6 kV 3**
Rated current	20 A
Rated voltage	500 V
Rated impulse voltage	6 kV
Pollution degree	3
Insulation resistance	$<10^{10}$ Ohm
Limiting temperatures	-40 °C ... 125 °C
Flammability (insert) acc. to UL 94	V 0
Mating cycles	<500
Material (insert)	PC, polycarbonate
Colour (insert)	RAL 7032 (light grey), RAL 5015 (blue), RAL 3000 (red)
Material (contact)	copper alloy

Specifications and approvals

IEC 60664-1
IEC 61984

Details

Remarks on the crimp technique

The wire gauges mentioned in the catalogue refer to geometric wire gauges of cables.

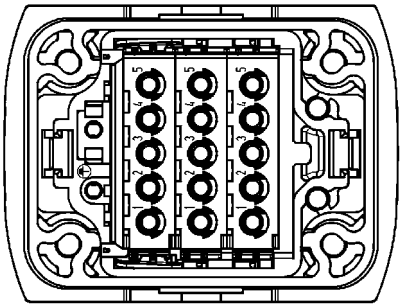

Placement for Han-*Yellock*® 30 with 3 Han-*Yellock*® modules

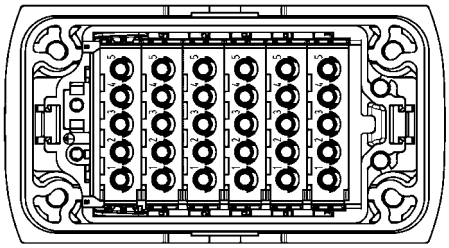

Placement for Han-*Yellock*® 60 with 6 Han-*Yellock*® modules

Number of contacts

5

500 V
20 A

Identification	Wire cross section (mm²)	Part number	Drawing Dimensions in mm
Han-*Yellock*®, Crimp terminal, silver plated contacts, contact resistance ≤2 mOhm 		11 05 105 3001 11 05 105 3011 11 05 105 3012	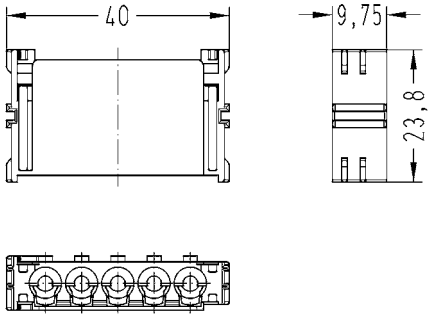 11 05 105 3001 grey 11 05 105 3011 blue 11 05 105 3012 red
Han-*Yellock*®, Crimp contact, gold plated contacts, contact resistance ≤2 mOhm 	0.14 – 0.37 0.5 0.75 1 1.5 2.5 3 4	11 05 000 6121 11 05 000 6122 11 05 000 6123 11 05 000 6124 11 05 000 6125 11 05 000 6126 11 05 000 6127 11 05 000 6128	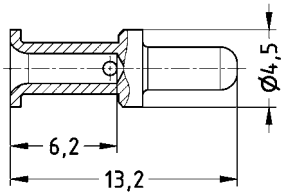
Han-*Yellock*®, Crimp contact, silver plated contacts, contact resistance ≤2 mOhm 	0.14 – 0.37 0.5 0.75 1 1.5 2.5 3 4	11 05 000 6101 11 05 000 6102 11 05 000 6103 11 05 000 6104 11 05 000 6105 11 05 000 6106 11 05 000 6107 11 05 000 6108	Wire gauge / Stripping length 0.14-0.37 mm² AWG 26-22 6.5 mm 0.5 mm² AWG 20 6.5 mm 0.75 mm² AWG 18 6.5 mm 1 mm² AWG 18 6.5 mm 1.5 mm² AWG 16 6.5 mm 2.5 mm² AWG 14 6.5 mm 3 mm² AWG 12 6.5 mm 4 mm² AWG 12 6.5 mm Removal tool 09 99 000 0319 see chapter 90

Features

- Snap-in assembly from mating side and from termination side
- Bus bar within bridge attachements
- Visible bridge position from mating side and from termination side
- Fast and easy exchange

Technical characteristics

Contacts	5
Flammability (insert) acc. to UL 94	V 0
Mating cycles	≥500
Material (insert)	polycarbonate
Colour (insert)	RAL 7032 (light grey), RAL 3000 (red), RAL 5015 (blue)

Specifications and approvals

IEC 60664-1
IEC 61984

Number of contacts

5

Identification	Part number	Drawing Dimensions in mm
Han-*Yellock*®, Multiplier, 1:1 	11 05 105 2801	Circuit diagram 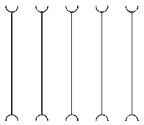 0 bridged contacts 5 unbridged contacts 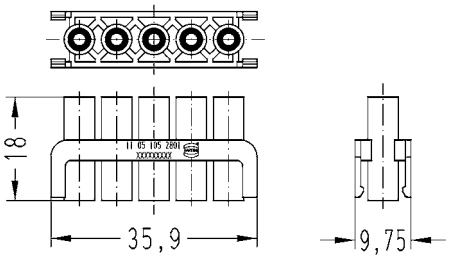
Han-*Yellock*®, Multiplier, 2:3 	11 05 105 2802	Circuit diagram 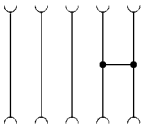 2 bridged contacts 3 unbridged contacts 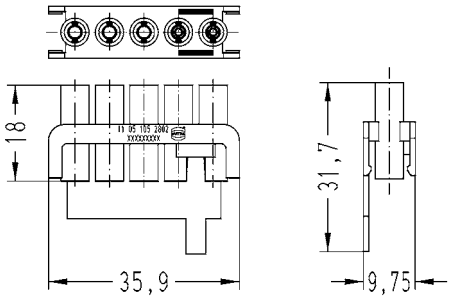

Identification	Part number	Drawing Dimensions in mm
Han-*Yellock*®, Multiplier, 3:2 	11 05 105 2803	Circuit diagram 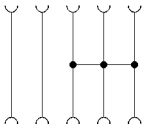 3 bridged contacts 2 unbridged contacts 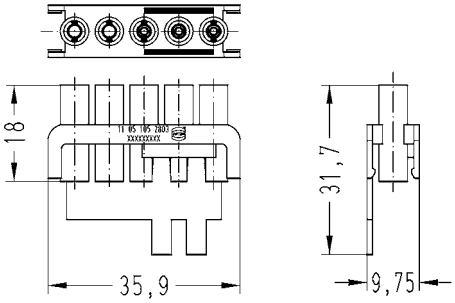
Han-*Yellock*®, Multiplier, 4:1 	11 05 105 2804	Circuit diagram 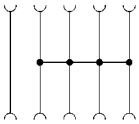 4 bridged contacts 1 unbridged contacts 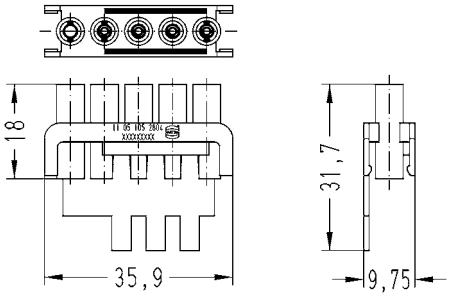
Han-*Yellock*®, Multiplier, 5:0 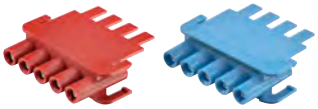	11 05 105 2805 11 05 105 2815	Circuit diagram 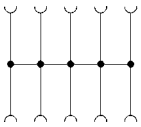 5 bridged contacts 0 unbridged contacts 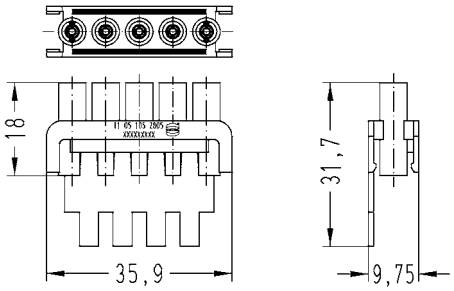 11 05 105 2805 red 11 05 105 2815 blue

Multiplier

Identification	Part number	Drawing Dimensions in mm
Han-*Yellock*®, Multiplier, 2;3:0 	11 05 105 2823	Circuit diagram 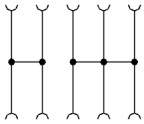 2 bridged contacts 3 bridged contacts 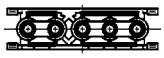 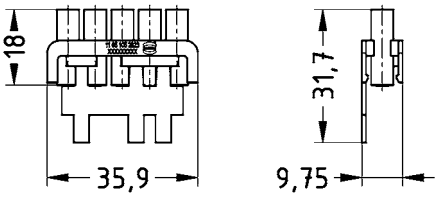

Features

- Suitable for Han-Modular® modules
- Fast and tool-less assembly
- Snap-in assembly from mating side and from termination side
- Removal from mating side and from termination side possible

Technical characteristics

Flammability (insert) acc. to UL 94	V 0
Material (insert)	PC
Colour (insert)	RAL 7032 (light grey)

Specifications and approvals

IEC 60664-1
IEC 61984
GL

Details

Han-*Yellock*® adapter frame

Han-Modular® series interfaces can be established using the Han-*Yellock*® adapter frame. The connection is based on a male/female contact arrangement.

Inserting the adapter frame in the housing:

The adapter frame can be snapped into the housing, bulkhead mounting, on the termination side and the mating side (refer to the illustration).

The lateral plastic tabs („B“) are pressed into the metal clamps on the housing.

The adapter frame then snaps in with a distinctly audible click.

① metal clamp

Removal of the adapter frame:

The removal tool part no. 11 99 000 0001 is required for disassembly. (see chapter 90)

The removal tool is inserted into the metal clamp and pressed down as shown in the following illustration. A screwdriver need also be placed into the notch in the housing.

The removal tool should then be pulled outwards to remove the adapter frame from the housing.

The removal can be made from the termination side as well as from the mating side.

The process is identical for both housings, bulkhead mounting, and carrier hoods.

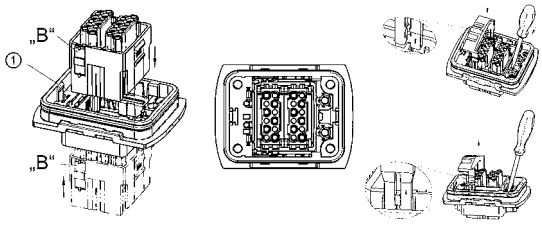

Identification	Part number	Drawing Dimensions in mm
Han-*Yellock*®, Adapter frames, for Han-*Yellock*® 30 +60, for housings bulkhead mounting Mounting/removal from termination side only!	11 00 200 0301	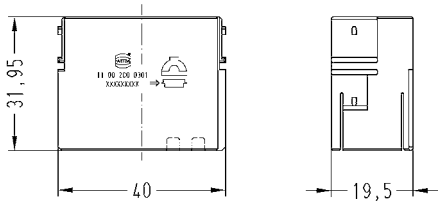
Han-*Yellock*®, Adapter frames, for Han-*Yellock*® 30, for housings bulkhead mounting 	11 00 300 0301	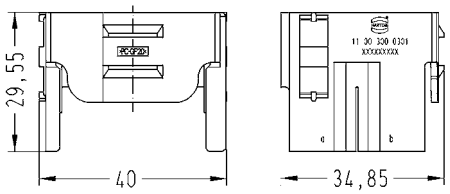
Han-*Yellock*®, Adapter frames, for Han-*Yellock*® 60, for housings bulkhead mounting 	11 00 600 0301	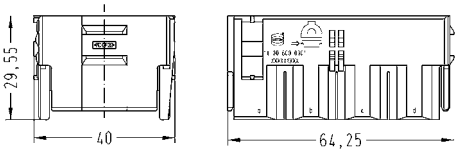
Han-*Yellock*®, Adapter frames, for Han-*Yellock*® 30 +60, for carrier hoods Mounting/removal from termination side only!	11 00 200 0101	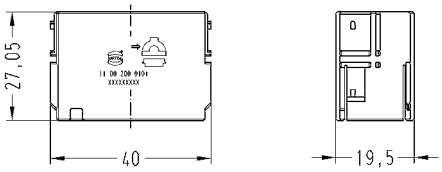
Han-*Yellock*®, Adapter frames, for Han-*Yellock*® 30, for carrier hoods 	11 00 300 0101	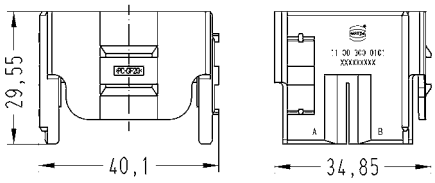

Adapter frames

Identification	Part number	Drawing Dimensions in mm
Han-*Yellock*®, Adapter frames, for Han-*Yellock*® 60, for carrier hoods	11 00 600 0101	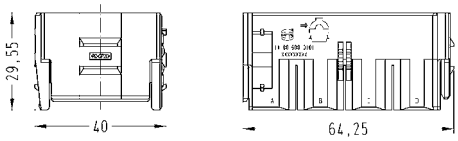

Combinations	Han-Yellock® Hood/Housing				
	30	30	60	60	60
Han-Yellock® 20 Adapter frame (for Han-Yellock® 30 und 60)	1		2	1	
Han-Yellock® 30 Adapter frame		1			
Han-Yellock® 60 Adapter frame					1
Han-Yellock® Module	1		2	4	

Features

- Snap-in assembly from mating side and from termination side
- Finger safe design
- Fast and tool-less assembly

Derating

Current carrying capacity

The current carrying capacity of the connectors is limited by the thermal load capability of the contact element material including the connections and the insulating parts. The derating curve is therefore valid for currents which flow constantly (non-intermittent) through each contact element of the connector evenly, without exceeding the allowed maximum temperature.

Measuring and testing techniques acc. to IEC 60512-5-2

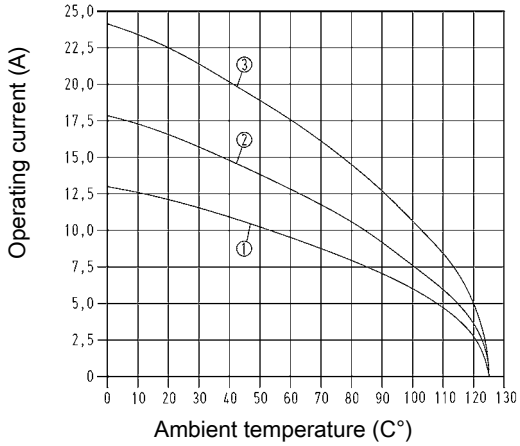

① Wire cross section 1.5 mm²
② Wire cross section 2.5 mm²
③ Wire cross section 4 mm²

Derating

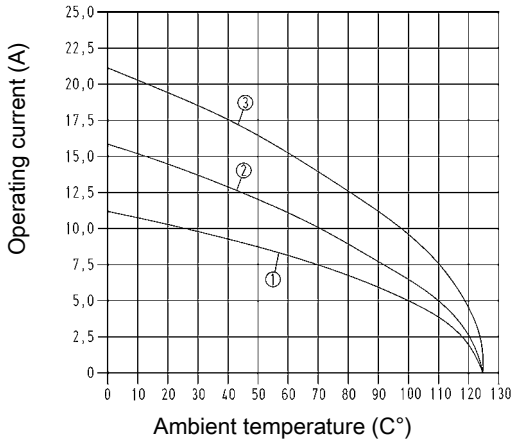

① Wire cross section 1.5 mm²
② Wire cross section 2.5 mm²
③ Wire cross section 4 mm²

Technical characteristics

Contacts	25, 48
Electrical data acc. to IEC 61984	**16 A 500 V 6 kV 3**
Rated current	16 A
Rated voltage	500 V
Rated impulse voltage	6 kV
Pollution degree	3
Insulation resistance	≥10^{10} Ohm
Limiting temperatures	-40 °C ... 125 °C
Flammability (insert) acc. to UL 94	V 0
Mating cycles	≥500
Material (insert)	polycarbonate
Colour (insert)	RAL 7032 (light grey)
Material (contact)	copper alloy

Specifications and approvals

IEC 60664-1
IEC 61984

Details

Remarks on the crimp technique

The wire gauges mentioned in the catalogue refer to geometric wire gauges of cables.

Number of contacts

25

500 V
16 A

Identification	Wire cross section (mm²)	Part number male	Part number female	Drawing Dimensions in mm
Han-*Yellock*®, Crimp terminal Please order crimp contacts separately. ATTENTION! It is not possible to use 2 monoblocks 30 in the Han-*Yellock*® 60 series!		11 05 325 3001	11 05 325 3101	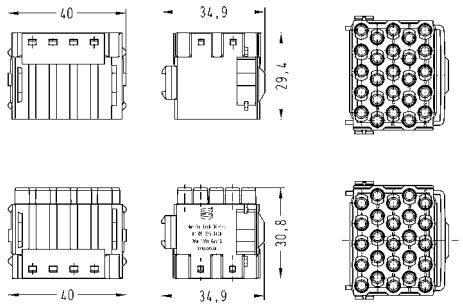
Han-*Yellock*®, Crimp contact, gold plated contacts, contact resistance ≤2 mOhm	0.14 – 0.37 0.5 0.75 1 1.5 2.5 3 4	11 05 000 6121 11 05 000 6122 11 05 000 6123 11 05 000 6124 11 05 000 6125 11 05 000 6126 11 05 000 6127 11 05 000 6128	11 05 000 6221 11 05 000 6222 11 05 000 6223 11 05 000 6224 11 05 000 6225 11 05 000 6226 11 05 000 6227 11 05 000 6228	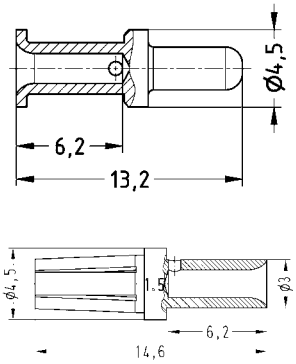
Han-*Yellock*®, Crimp contact, silver plated contacts, contact resistance ≤2 mOhm	0.14 – 0.37 0.5 0.75 1 1.5 2.5 3 4	11 05 000 6101 11 05 000 6102 11 05 000 6103 11 05 000 6104 11 05 000 6105 11 05 000 6106 11 05 000 6107 11 05 000 6108	11 05 000 6201 11 05 000 6202 11 05 000 6203 11 05 000 6204 11 05 000 6205 11 05 000 6206 11 05 000 6207 11 05 000 6208	

Wire gauge		Stripping length
0.14-0.37 mm²	AWG 26-22	6.5 mm
0.5 mm²	AWG 20	6.5 mm
0.75 mm²	AWG 18	6.5 mm
1 mm²	AWG 18	6.5 mm
1.5 mm²	AWG 16	6.5 mm
2.5 mm²	AWG 14	6.5 mm
3 mm²	AWG 12	6.5 mm
4 mm²	AWG 12	6.5 mm

Removal tool 09 99 000 0319
see chapter 90

Number of contacts

48

500 V
16 A

Identification	Wire cross section (mm²)	Part number male	Part number female	Drawing Dimensions in mm
Han-*Yellock*®, Crimp terminal Please order crimp contacts separately.		11 05 648 3001	11 05 648 3101	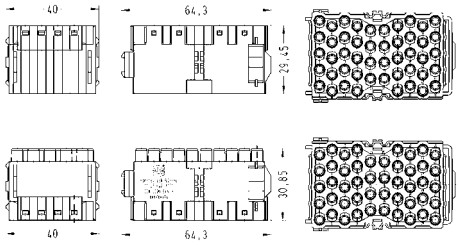
Han-*Yellock*®, Crimp contact, gold plated contacts, contact resistance ≤2 mOhm 	0.14 – 0.37 0.5 0.75 1 1.5 2.5 3 4	11 05 000 6121 11 05 000 6122 11 05 000 6123 11 05 000 6124 11 05 000 6125 11 05 000 6126 11 05 000 6127 11 05 000 6128	11 05 000 6221 11 05 000 6222 11 05 000 6223 11 05 000 6224 11 05 000 6225 11 05 000 6226 11 05 000 6227 11 05 000 6228	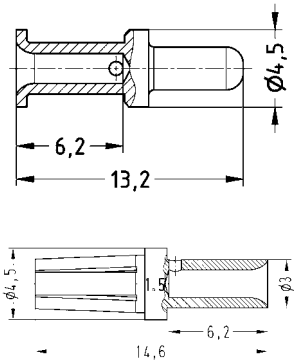
Han-*Yellock*®, Crimp contact, silver plated contacts, contact resistance ≤2 mOhm 	0.14 – 0.37 0.5 0.75 1 1.5 2.5 3 4	11 05 000 6101 11 05 000 6102 11 05 000 6103 11 05 000 6104 11 05 000 6105 11 05 000 6106 11 05 000 6107 11 05 000 6108	11 05 000 6201 11 05 000 6202 11 05 000 6203 11 05 000 6204 11 05 000 6205 11 05 000 6206 11 05 000 6207 11 05 000 6208	

Wire gauge		Stripping length
0.14-0.37 mm²	AWG 26-22	6.5 mm
0,5 mm²	AWG 20	6.5 mm
0.75 mm²	AWG 18	6.5 mm
1 mm²	AWG 18	6.5 mm
1.5 mm²	AWG 16	6.5 mm
2.5 mm²	AWG 14	6.5 mm
3 mm²	AWG 12	6.5 mm
4 mm²	AWG 12	6.5 mm

Removal tool 09 99 000 0319
see chapter 90

Features

- Metal hoods/housings for industrial applications
- Highly EMC resistant
- High robustness due to internal locking mechanism
- Compatible with inserts size Han® 3 A

Technical characteristics

Un-/Locking temperatures	-10 °C ... 85 °C
Limiting temperatures	-40 °C ... 125 °C
Flammability (hoods/housings) acc. to UL 94	V 0
Mating cycles	<500
Flammability (seal) acc. to UL 94	V 0
Degree of protection acc. to IEC 60529	IP65 / IP67, IP44
Material (hoods/housings)	zinc die-cast
Surface (hoods/housings)	powder-coated
Colour (hoods/housings)	RAL 7021 black/grey, black, RAL 7037 (grey)
Material (locking lever)	polyamide + stainless steel
Colour (locking lever)	melon yellow
Material (seal)	NBR

Specifications and approvals

Metal hoods/housings for industrial applications

Identification	Cable entry	Part number	Drawing Dimensions in mm
Han-*Yellock*®, Hoods, top entry, push button	1xM20 1xM25	11 20 003 1400 11 20 003 1401	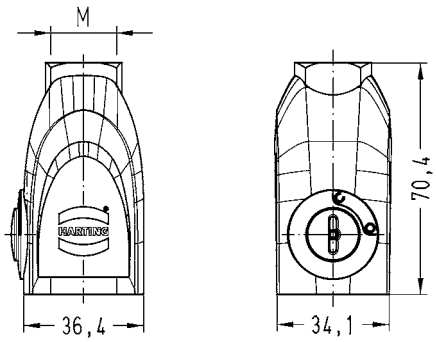
Han-*Yellock*®, Hoods, angled entry, push button	1xM20 1xM25	11 20 003 1600 11 20 003 1601	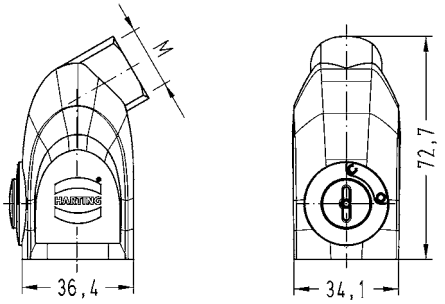
Han-*Yellock*®, Protection cover for hoods, plastic 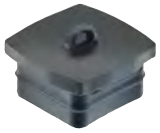		11 20 003 5456	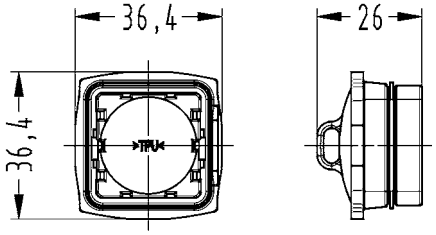

Identification	Cable entry	Part number	Drawing Dimensions in mm
Han-*Yellock*®, Bulkhead mounted housings, straight 		11 20 003 0300	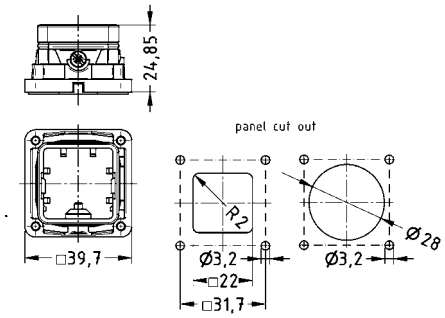
Han-*Yellock*®, Bulkhead mounted housings, angled 		11 20 003 0800	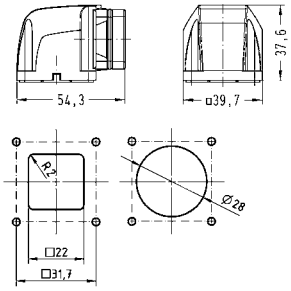
Han-*Yellock*®, Protection cover for bulkhead mounted housings, with sealing, plastic 		11 20 003 5406	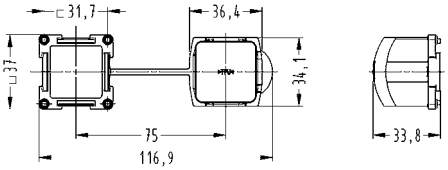
Han-*Yellock*®, Protection cover for bulkhead mounted housings, without sealing, plastic 		11 20 003 5407	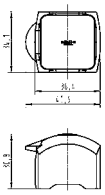

Features

- For three Han-*Yellock*® modules
- High robustness due to internal locking mechanism
- Two-part housing
- Earthed contacts PE in crimped or Han-Quick Lock® termination
- Protection cover retrofit on housing side

Technical characteristics

Un-/Locking temperatures	-10 °C ... 85 °C
Limiting temperatures	-40 °C ... 125 °C
Mating cycles	<500
Flammability (seal) acc. to UL 94	V 0
Degree of protection acc. to IEC 60529	IP65 / IP67
Material (hoods/housings)	zinc die-cast, aluminium
Surface (hoods/housings)	powder-coated
Colour (hoods/housings)	RAL 7037 (grey), black, RAL 7021 black/grey, white, RAL 9005 (black)
Material (locking lever)	polyamide + stainless steel
Colour (locking lever)	melon yellow
Material (seal)	NBR
Material (screwing)	stainless steel

Specifications and approvals

IEC 61984
IEC 60664-1

Details

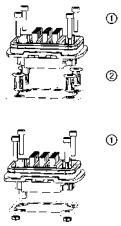

① M4 fixing screw (screw length > 20 mm, tightening torque: 1 Nm)
② panel fastener (tightening torque: 2.3 Nm)

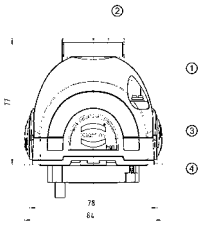

① Shell with top entry
② Cable entry M20 ... M40
③ Carrier hood with push button release
④ Housings bulkhead mounting

Metal hoods/housings for industrial applications

Identification	Cable entry	Part number	Drawing Dimensions in mm
Han-*Yellock*®, Bulkhead mounted housings 		11 12 300 0301	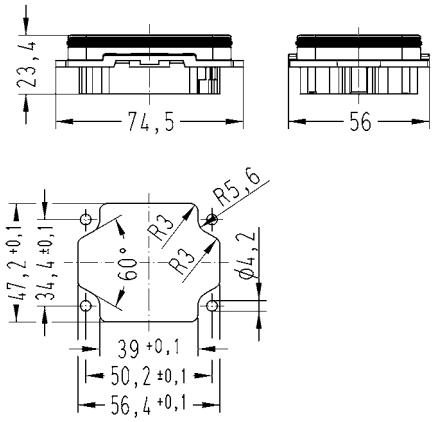
Han-*Yellock*®, Bulkhead mounted housings Range of delivery: 4 panel fastener included 		11 12 300 0302	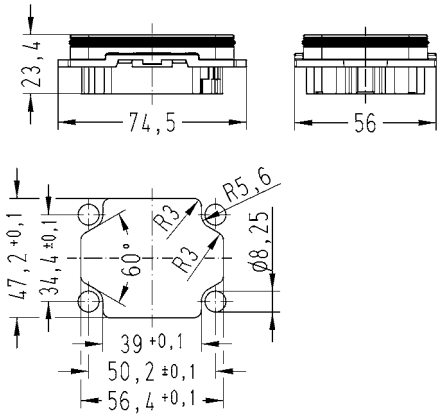
Han-*Yellock*®, Bulkhead and surface mounted housings, top entry, screw locking 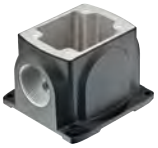	1xM20 1xM25 1xM32 2xM20 2xM25 2xM32	11 12 300 1200 11 12 300 1201 11 12 300 1202 11 12 300 1204 11 12 300 1205 11 12 300 1206	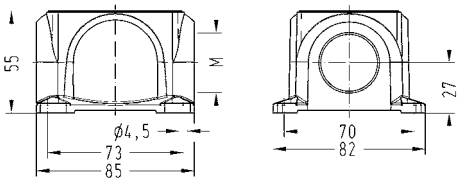

Identification	Cable entry	Part number	Drawing Dimensions in mm
Han-*Yellock*®, Protection cover for bulkhead mounted housings, plastic 		11 12 300 5401	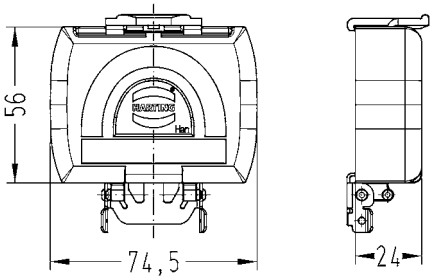
Han-*Yellock*®, Surface mounted housings, incl. Housings bulkhead mounting, top entry, screw locking 	1xM20 1xM25 1xM32 2xM20 2xM25 2xM32	11 12 300 1210 11 12 300 1211 11 12 300 1212 11 12 300 1214 11 12 300 1215 11 12 300 1216	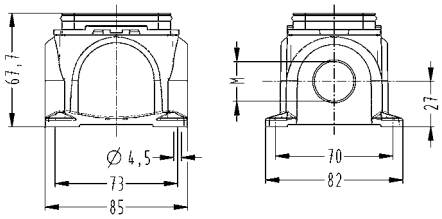
Han-*Yellock*®, Panel feed through housings, top entry 	1xM32	11 12 300 1702	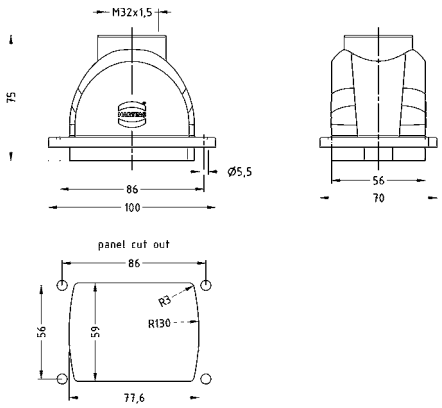

Metal hoods/housings for industrial applications

Identification	Cable entry	Part number	Drawing Dimensions in mm
Han-*Yellock*®, Shell, top entry, screw locking	1xM20 1xM25 1xM32	11 12 300 1400 11 12 300 1401 11 12 300 1402	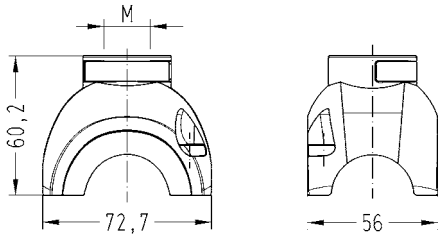
Han-*Yellock*®, Shell, side entry, screw locking	1xM20 1xM25 1xM32	11 12 300 1500 11 12 300 1501 11 12 300 1502	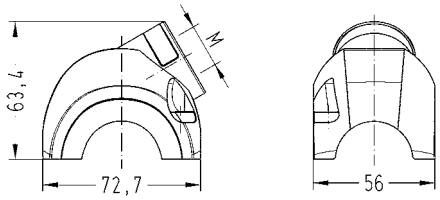
Han-*Yellock*®, Shell, white, side entry, screw locking	1xM20	11 12 300 1510	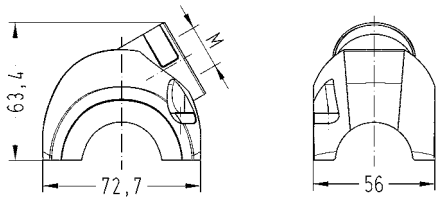
Han-*Yellock*®, Shell, angled entry, screw locking	1xM20 1xM25 1xM32	11 12 300 1600 11 12 300 1601 11 12 300 1602	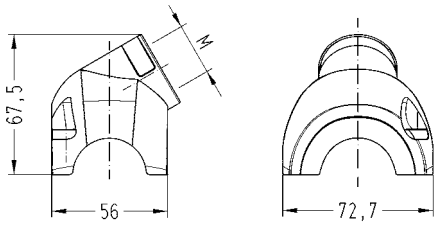
Han-*Yellock*®, Carrier hood, plain push button		11 12 300 0100	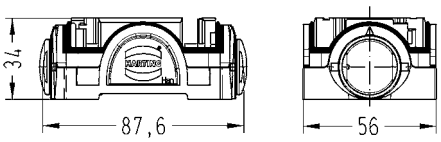

Identification	Cable entry	Part number	Drawing Dimensions in mm
Han-*Yellock*®, Carrier hood, push button, slot		11 12 300 0110	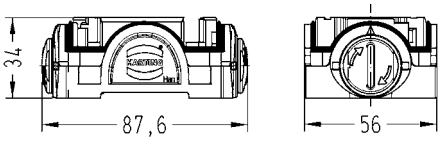
Han-*Yellock*®, Protection covers for carrier hoods		11 12 300 5451	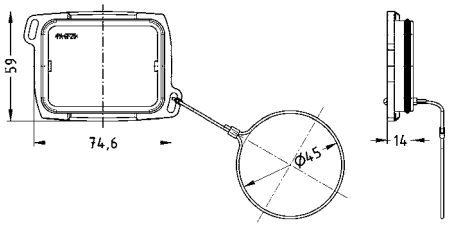

Metal hoods/housings for outdoor applications

Identification	Part number	Drawing Dimensions in mm
Han-*Yellock*®, Bulkhead mounted housings 	11 13 300 0301	
Han-*Yellock*®, Bulkhead mounted housings Range of delivery: 4 panel fastener included 	11 13 300 0302	

Metal hoods/housings for outdoor applications

Identification	Cable entry	Part number	Drawing Dimensions in mm
Han-*Yellock*®, Shell, top entry, screw locking	1xM25	11 13 300 1401	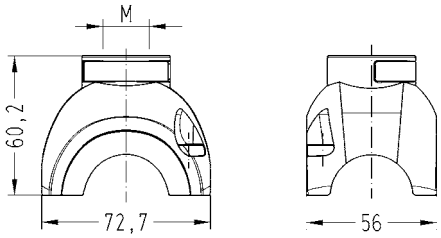
Han-*Yellock*®, Shell, side entry, screw locking	1xM25	11 13 300 1501	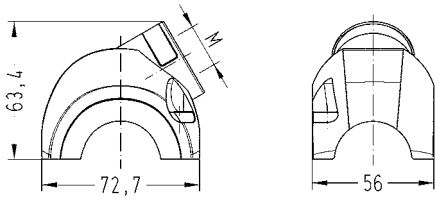
Han-*Yellock*®, Shell, angled entry, screw locking	1xM25	11 13 300 1601	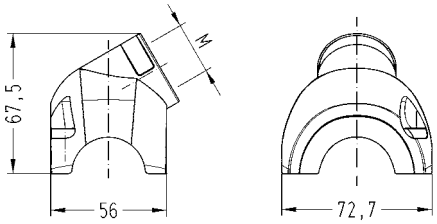
Han-*Yellock*®, Carrier hood, plain push button		11 13 300 0100	
Han-*Yellock*®, Carrier hood, push button, slot		11 13 300 0110	

Features

- For six Han-*Yellock*® modules
- High robustness due to internal locking mechanism
- Two-part housing
- Earthed contacts PE in crimped or Han-Quick Lock® termination
- Protection cover retrofit on housing side

Technical characteristics

Un-/Locking temperatures	-10 °C ... 85 °C
Limiting temperatures	-40 °C ... 125 °C
Flammability (hoods/housings) acc. to UL 94	V 0
Mating cycles	<500
Flammability (locking lever) acc. to UL 94	V 0
Degree of protection acc. to IEC 60529	IP65 / IP67
Tightening torque (locking)	1 Nm, 2.3 Nm, 1.2 Nm
Material (hoods/housings)	zinc die-cast, aluminium, PA
Surface (hoods/housings)	powder-coated
Colour (hoods/housings)	RAL 7037 (grey), RAL 7021 black/grey, black, RAL 9005 (black)
Material (locking lever)	polyamide + stainless steel
Colour (locking lever)	melon yellow, RAL 9005 (black)
Material (seal)	NBR
Material (screwing)	stainless steel

Specifications and approvals

IEC 60664-1
IEC 61984
GL

Details

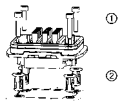

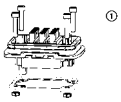

① M4 fixing screw (screw length > 20 mm, tightening torque: 1 Nm)
② panel fastener (tightening torque: 2.3 Nm)

Metal hoods/housings for industrial applications

Identification	Cable entry	Part number	Drawing Dimensions in mm
Han-*Yellock*®, Bulkhead mounted housings 		11 12 600 0301	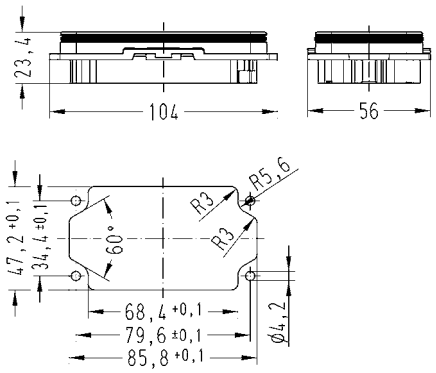
Han-*Yellock*®, Bulkhead mounted housings Range of delivery: 4 panel fastener included 		11 12 600 0302	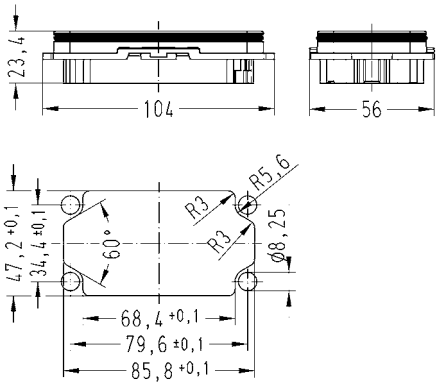
Han-*Yellock*®, Bulkhead and surface mounted housings, side entry, screw locking 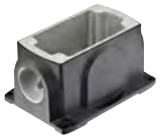	1xM25 1xM32 1xM40 2xM25 2xM32 2xM40	11 12 600 1201 11 12 600 1202 11 12 600 1203 11 12 600 1205 11 12 600 1206 11 12 600 1207	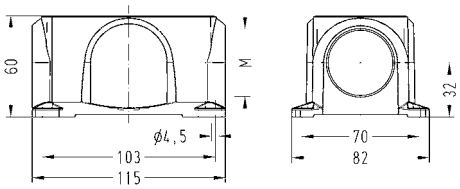
Han-*Yellock*®, Protection cover for bulkhead mounted housings, plastic 		11 12 600 5401	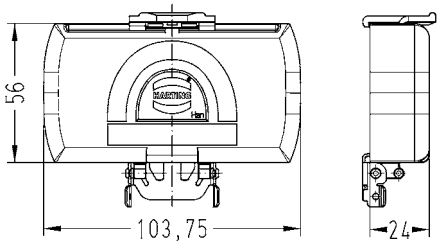

Identification	Cable entry	Part number	Drawing Dimensions in mm
Han-*Yellock*®, Surface mounted housings, incl. Housings bulkhead mounting, side entry, screw locking 	1xM25 1xM32 1xM40 2xM25 2xM32 2xM40	11 12 600 1211 11 12 600 1212 11 12 600 1213 11 12 600 1215 11 12 600 1216 11 12 600 1217	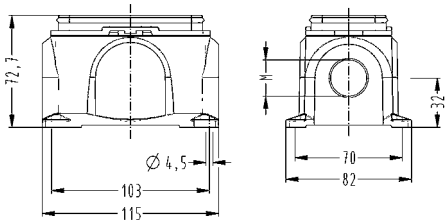
Han-*Yellock*®, Panel feed through housings, top entry 	2xM25	11 12 600 1711	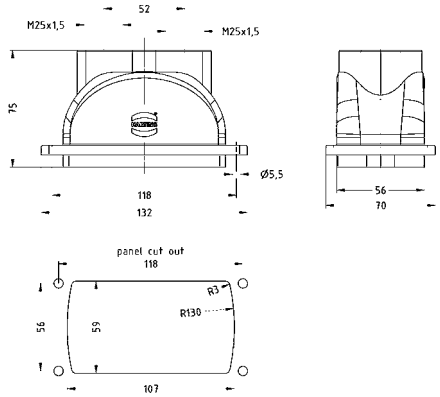

Metal hoods/housings for industrial applications

Identification	Cable entry	Part number	Drawing Dimensions in mm
Han-*Yellock*®, Shell, top entry 	1xM20, 1xM25 1xM25 1xM32 1xM40 2xM25	11 12 600 1415 11 12 600 1401 11 12 600 1402 11 12 600 1403 11 12 600 1411	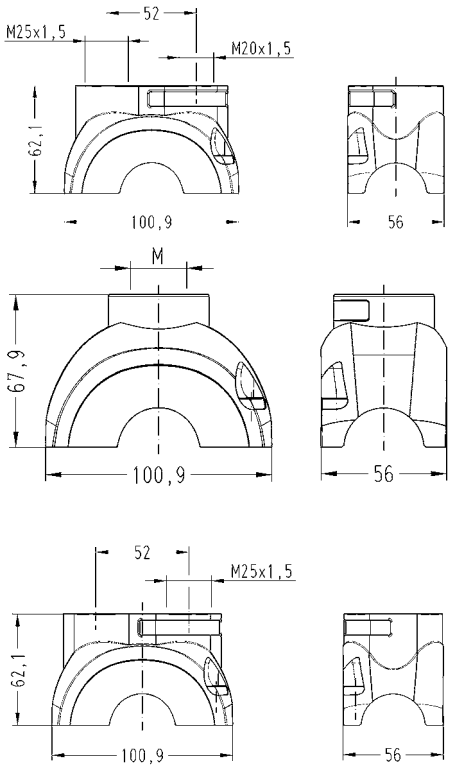
Han-*Yellock*®, Shell, side entry 	1xM25 1xM32 1xM40	11 12 600 1501 11 12 600 1502 11 12 600 1503	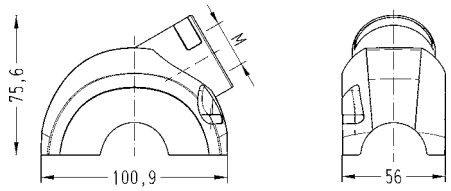
Han-*Yellock*®, Carrier hood, plain push button 		11 12 600 0100	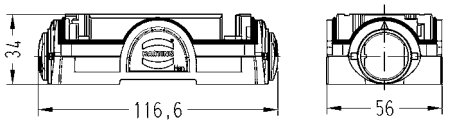

Identification	Cable entry	Part number	Drawing Dimensions in mm
Han-*Yellock*®, Carrier hood, push button, slot		11 12 600 0110	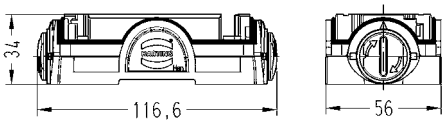
Han-*Yellock*®, Protection covers for carrier hoods		11 12 600 5451	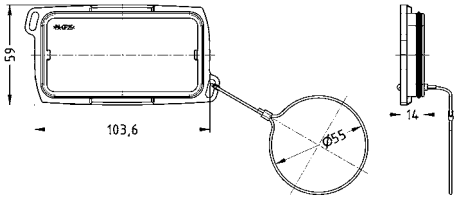

Metal hoods/housings for outdoor applications

Identification	Part number	Drawing Dimensions in mm
Han-*Yellock*®, Bulkhead mounted housings	11 13 600 0301	
Han-*Yellock*®, Bulkhead mounted housings Range of delivery: 4 panel fastener included	11 13 600 0302	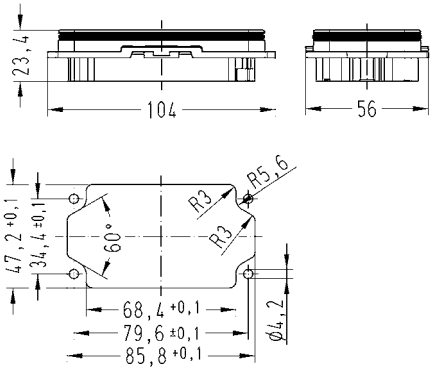

Metal hoods/housings for outdoor applications

Identification	Cable entry	Part number	Drawing Dimensions in mm
Han-*Yellock*®, Shell, top entry	1xM32 1xM40	11 13 600 1402 11 13 600 1403	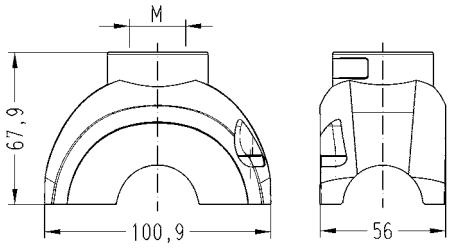
Han-*Yellock*®, Shell, side entry	1xM32	11 13 600 1502	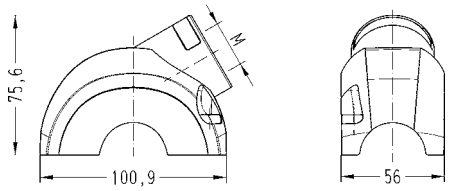
Han-*Yellock*®, Carrier hood, plain push button		11 13 600 0100	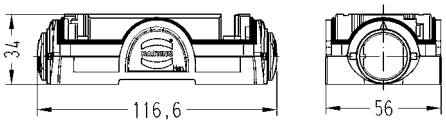
Han-*Yellock*®, Carrier hood, push button, slot		11 13 600 0110	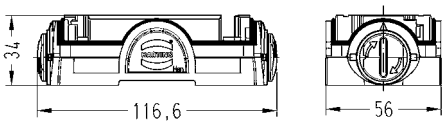

Technical characteristics

Material (seal)	NBR

Identification	Size	Part number	Drawing Dimensions in mm
Adapter plate, for Han-*Yellock*® 30 circular 68 mm punch for Han-*Yellock*® panel cut out		11 00 300 9601	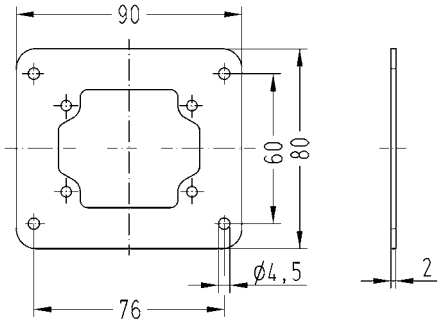
Adapter plate, for Han-*Yellock*® 30, with gasket 		11 00 300 9603	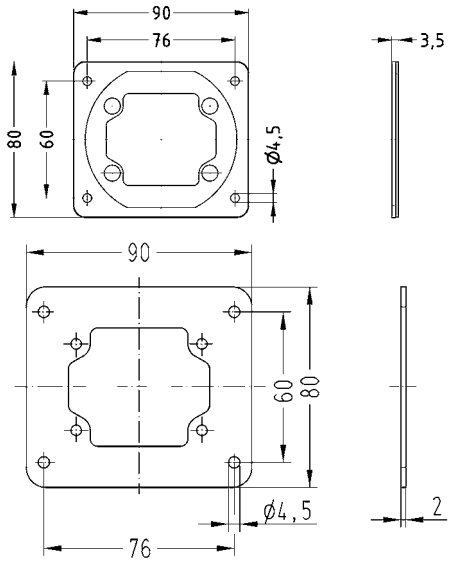

Identification	Size	Part number	Drawing Dimensions in mm
Adapter plate, for Han-*Yellock*® 60		11 00 600 9601	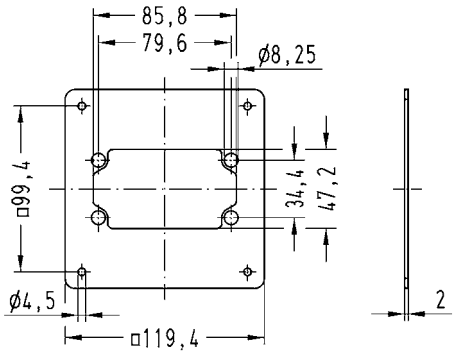
Adapter plate, for Han-*Yellock*® 60, with gasket 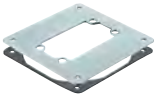		11 00 600 9603	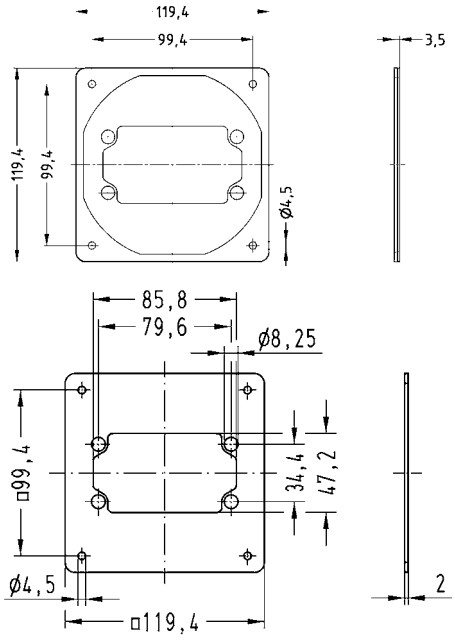
Flange gasket, for Han-*Yellock*® 10		11 20 003 9904	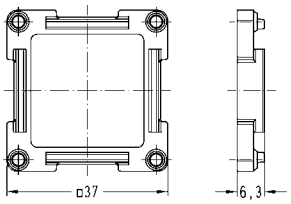
Profile gasket, for Han-*Yellock*® 10		11 20 003 9905	

Identification	Size	Part number	Drawing Dimensions in mm
Profile gasket, for Han-*Yellock*® 30		11 00 300 9501	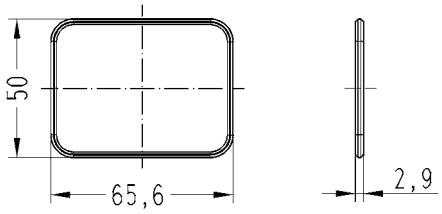
Shaped gasket, for Han-*Yellock*® 30		11 00 300 9502	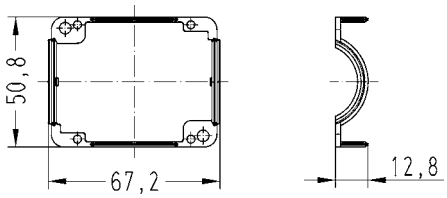
Flange gasket, for Han-*Yellock*® 30		11 00 300 9503	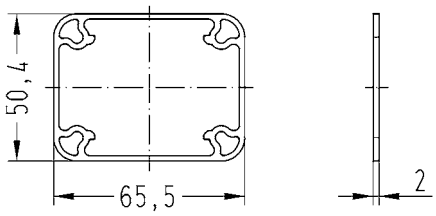
Profile gasket, for Han-*Yellock*® 60		11 00 600 9501	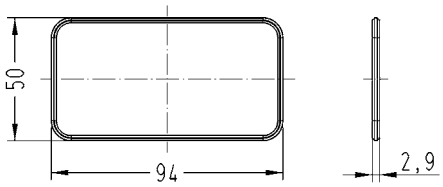
Shaped gasket, for Han-*Yellock*® 60		11 00 600 9502	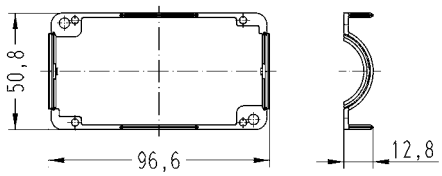
Flange gasket, for Han-*Yellock*® 60		11 00 600 9503	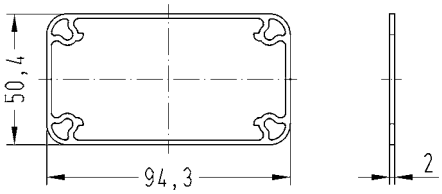

Identification	Size	Part number	Drawing Dimensions in mm
Coding element, plastic Range of delivery: 8 pieces per frame		11 00 000 9501	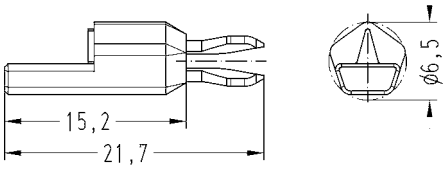
Fixing screws	M3	11 20 003 9903	
Identification strip Range of delivery: 500 pieces on a reel		11 00 000 9601	
Shielding frame, for Han-*Yellock*® 30, for cable clamp fitting		11 12 300 5201	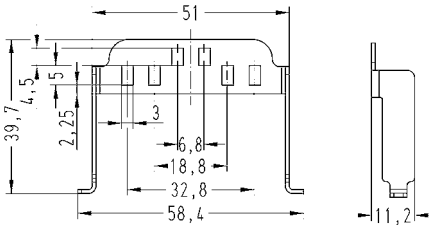
Shielding frame, for Han-*Yellock*® 30, ground clamp		11 12 300 5202	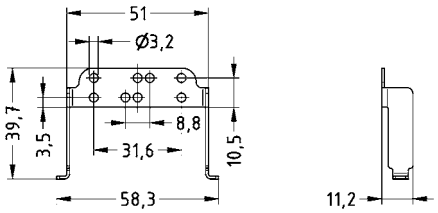
Shielding frame, for Han-*Yellock*® 60, for cable clamp fitting		11 12 600 5201	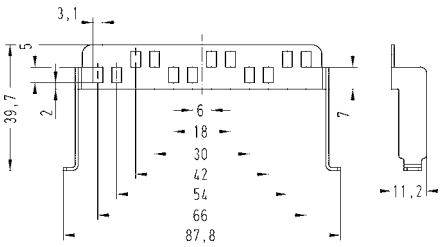

Technical characteristics

Material (contact)	copper alloy

Details

Crimping tools see chapter 90

Identification	Wire cross section (mm²)	Part number male	Part number female	Drawing Dimensions in mm
Han-*Yellock*®, Crimp terminal, PE contact	6 10	11 00 000 9509 11 00 000 9510		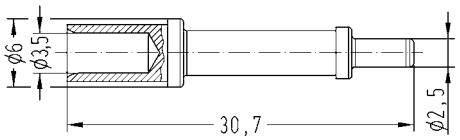 Stripping length 7.5 mm 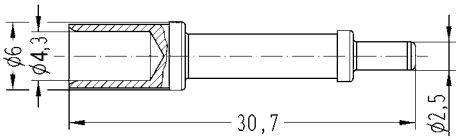 Stripping length 7.5 mm
Han-Quick Lock® Han-*Yellock*®, PE contact chamber	0.5 – 2.5	11 05 001 2601	11 05 001 2601	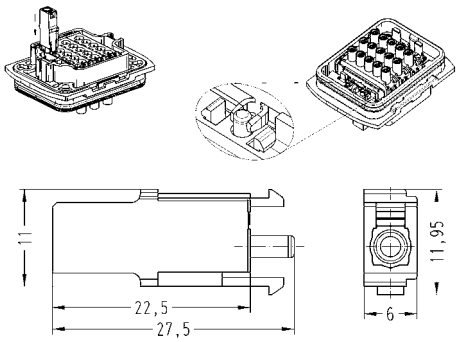 Stripping length 10 mm

The KR 6 R900 sixx (KR AGILUS) with Han-*Yellock*® combines functional design and high technical requirements.

Photo courtesy: KUKA Roboter GmbH

Contents	Page
Module overview for applications with Han-Eco®	**29.3**
Han-Eco® Monoblocks.....	**29.6**
Hoods/housings for industrial applications	**29.11**
Hoods/housings for outdoor applications	**29.24**
Accessories	**29.37**

Description of the Han-Eco® system

Han-Eco® – a new hood and housing series made of high-performance plastic material.

Han-Eco® is the ideal solution for applications that do not require the full range of product features offered by the Han® B series of hoods and housings, and users want to take advantage of the weight and cost advantages.

Like the Han® B standard series, the Han-Eco® series is available in the following sizes: 6 B, 10 B, 16 B and 24 B. The cable entries are available with metric threading, a cable gland is implemented. For housing sizes 6 B and 10 B size of the cable gland is M32, for 16 B and 24 B cable gland M40 is used.

Han-Eco® hoods and housings are made of high-performance plastic that is highly resistant to environmental stress and – in combination with the design - provides very good mechanical stability. When the connector is closed and locked, it provides degree of protection IP 65 as defined in DIN EN 60 529. With seals made of high UV- and ozone-resistant material FPM (Fluororubber) the Han-Eco® hoods and housings are fit for outdoor use. The material also meets demanding flammability requirements of UL 94 Class V 0.

Fast, simple assembly is another outstanding product feature. Click-and-mate design totally eliminates the need for tools during assembly of the Han-Eco® hoods and housings.

The Han-Eco® hoods and housings are compatible with the range of modules from the Han-Modular® series. One extra module fits into the Han-Eco® hoods and housing compared to the equivalent product in the Han® B Standard series. This special feature applies to all four sizes.

A optional PE module has been developed specifically for the Han-Eco® hoods and housings to hold the protective ground conductor.

Advantages:

- Weight reduction combined with mechanical strength
- Quick and easy assembly without tools – also possible to mount the modules from the rear side of the cabinet
- Highly resistant to environmental stress, suitable for use in outdoor applications
- Complete range of modules from Han-Modular® series usable (with exception of modules with imperative guiding pins [male and female])

Assembly details

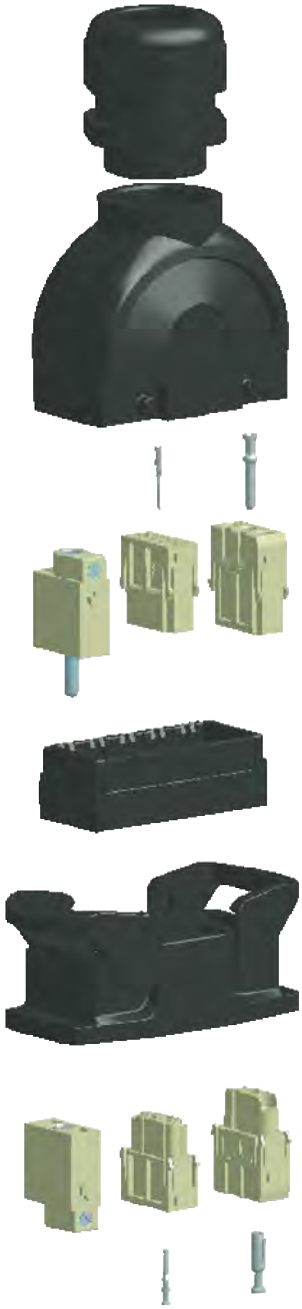

Module overview for applications with Han-Eco®

Series	Han® 100 A Axial module	Han® 100 A Crimp module	Han® 100 A Single module	Han® 70 A Crimp module
Number of contacts	2	2	1	2
Modules	Axial screw terminal	Crimp terminal	Axial screw terminal	Crimp terminal
Rated current	100 A	100 A	100 A	70 A
Rated voltage	1000 V	1000 V	830 V	1000 V
Wire gauge	10 ... 38 mm²	10 ... 35 mm²	10 ... 35 mm²	10 ... 25 mm²

Series	Han® 70 A Axial module	Han® 70 A Hybrid module	Han® 40 A Axial module	Han® 40 A Crimp module
Number of contacts	2	1 / 4	2	2
Modules	Axial screw terminal	Axial screw terminal	Axial screw terminal	Crimp terminal
Rated current	70 A	70 A / 16 A	40 A	40 A
Rated voltage	1000 V	1000 V / 400 V	1000 V	1000 V
Wire gauge	6 ... 22 mm²	6 ... 22 mm² / 0.14 ... 4 mm²	2.5 ... 10 mm²	1.5 ... 10 mm²

Series	Han® C Axial module	Han® C module	Han® CC Protected module	Han® CD module
Number of contacts	3	3	4	3
Modules	Axial screw terminal	Crimp terminal	Crimp terminal	Crimp terminal
Rated current	40 A	40 A	40 A	40 A
Rated voltage	690 V	400 / 690 V	830 V	830 V
Wire gauge	2.5 ... 10 mm²	1.5 ... 10 mm²	1.5 ... 6 mm²	1.5 ... 6 mm²

Series	Han® E Quick Lock module	Han E® module	Han E® Screw module	Han® EE module
Number of contacts	6	6	5	8
Modules	Quick Lock terminal	Crimp terminal	Screw terminal	Crimp terminal
Rated current	16 A	16 A	16 A	16 A
Rated voltage	500 V	500 V	230 V / 400 V	400 V
Wire gauge	0.5 ... 2.5 mm²	0.14 ... 4 mm²	0.5 ... 2.5 mm²	0.14 ... 4 mm²

for more technical details see chapter 06
Removal tools 09 99 000 0331, 09 99 000 0828 and 09 99 000 0842 see chapter 90
* Take care of the wiring space! Choose inner positions.

Module overview for applications with Han-Eco®

Series	Han® EE Quick Lock module	Han E® Protected module	Han® EEE module	Han® ES module
Number of contacts	8	6	20	5
Modules	Quick Lock termination	Crimp terminal	Crimp terminal	Cage-clamp terminal
Rated current	16 A	16 A	16 A	16 A
Rated voltage	400 V	830 V	500 V	400 V
Wire gauge	0.5 ... 2.5 mm²	0.14 ... 4 mm²	0.14 ... 4 mm²	0.14 ... 2.5 mm²

Series	Han® HV Single module*	Han® HV module*	Han® HV module*	Han DD® module
Number of contacts	2	2	2	12
Modules	Crimp terminal	Crimp terminal	Crimp terminal	Crimp terminal
Rated current	16 A	16 A	40 A	10 A
Rated voltage	2500 V	2900 / 5000 V	2900 / 5000 V	250 V
Wire gauge	0.5 ... 4 mm²	0.5 ... 4 mm²	1.5 ... 10 mm²	0.14 ... 2.5 mm²

Series	Han DD® Quick Lock module	Han® DDD module	Han® High Density module	Han® D-Sub module
Number of contacts	12	17	25	9
Modules	Quick Lock termination	Crimp terminal	Crimp terminal	Crimp terminal
	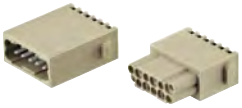			
Rated current	10 A	10 A	4 A	5 A
Rated voltage	250 V	160 V	50 V	50 V
Wire gauge	0.25 ... 1.5 mm²	0.14 ... 2.5 mm²	0.08 ... 0.52 mm²	0.08 ... 0.52 mm²

Series	Han® USB module	Han® FireWire module	Han® RJ45 module	Han® GigaBit module*
Number of contacts	4 / 8	6	8	8
Modules	USB 2.0 / 3.0	IEEE 1394	Ethernet Cat. 6	Ethernet Cat. 6

for more technical details see chapter 06
Removal tools 09 99 000 0331, 09 99 000 0828 and 09 99 000 0842 see chapter 90
* Take care of the wiring space! Choose inner positions.

Module overview for applications with Han-Eco®

Series	Han® MegaBit module*	Han-Quintax® module			
Number of contacts	2 x 4	2			
Modules	Ethernet Cat. 5e				
Contacts		Han-Quintax® contact 4 + shielding	High Density Quintax contact 8 + shielding	Han D® Coax contact 75 Ω 1 + shielding 75 Ω	Han E® Coax contact 50 Ω 1 + shielding 50 Ω

Series	Han® SC module	Han-Elisa®	Han® Dummy module
Number of contacts	4		
Modules			
Contacts	SC contact for GI 50; 62.5 / 125 µm For the use with Han-Eco® please order female module 09 14 004 4713. Only for multimode fiber.	Temperature I/O modules ID module	

Han-Eco

for more technical details see chapter 06
Removal tools 09 99 000 0331, 09 99 000 0828 and 09 99 000 0842 see chapter 90
* Take care of the wiring space! Choose inner positions.

Features

- Suitable for Han-Eco® hoods/housings and the Han-Modular® docking frame
- Higher contact density compared to Han E® standard screw inserts (up to 65%)
- Han-Eco® “click and mate” assembly concept
- 6 coding options

Technical characteristics

Contacts	10, 14, 20, 28
Electrical data acc. to IEC 61984	**16 A 500 V 6 kV 3**
Rated current	16 A
Rated voltage	500 V
Rated impulse voltage	6 kV
Pollution degree	3
Rated voltage acc. to UL	600 V
Rated voltage acc. to CSA	600 V
Insulation resistance	≥10^{10} Ohm
Limiting temperatures	-40 °C ... 125 °C
Flammability (insert) acc. to UL 94	V 0
Mating cycles	≥500
Material (insert)	polycarbonate
Colour (insert)	RAL 7032 (light grey)

Specifications and approvals

IEC 60664-1
IEC 61984

Number of contacts

10+ ⏚

500 V
16 A

Identification	Wire cross section (mm²)	Part number male	Part number female	Drawing Dimensions in mm
Han-Eco®, Screw terminal, with wire protection 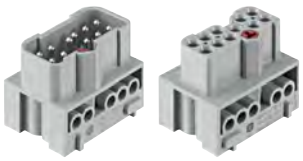	0.75 – 2.5	19 41 010 2601	19 41 010 2701	male 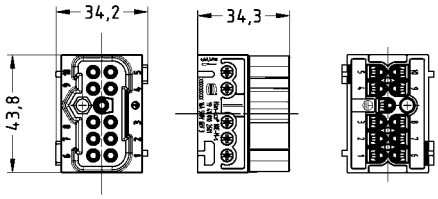 female 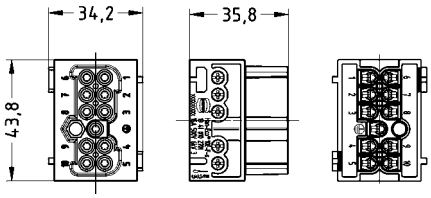
Coding element, plastic		09 12 000 9901	09 12 000 9902	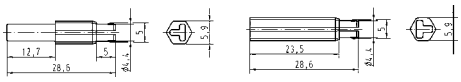

Number of contacts

14+ ⏚

500 V
16 A

Identification	Wire cross section (mm²)	Part number male	Part number female	Drawing Dimensions in mm
Han-Eco®, Screw terminal, with wire protection	0.75 – 2.5	19 41 014 2601	19 41 014 2701	male 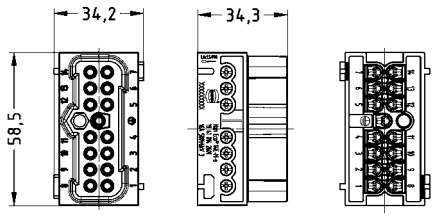 female 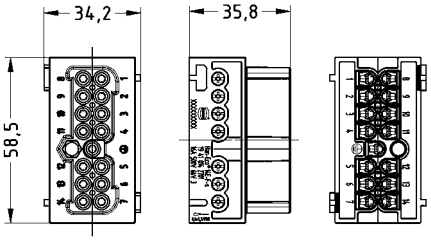
Coding element, plastic		09 12 000 9901	09 12 000 9902	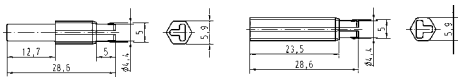

Han-Eco

Number of contacts

20+ ⏚

500 V
16 A

Identification	Wire cross section (mm²)	Part number male	Part number female	Drawing Dimensions in mm
Han-Eco®, Screw terminal, with wire protection	0.75 – 2.5	19 41 020 2601	19 41 020 2701	male 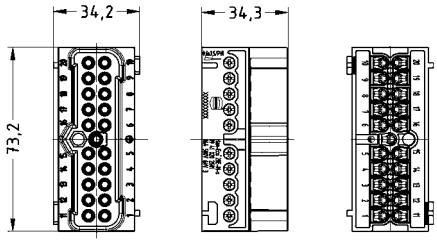 female 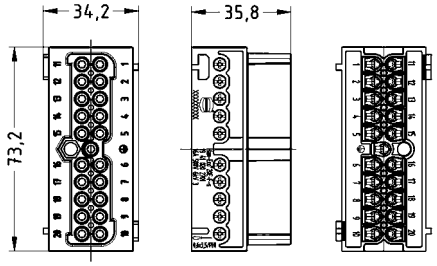
Coding element, plastic		09 12 000 9901	09 12 000 9902	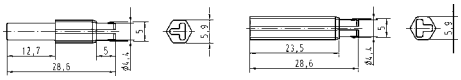

Number of contacts

28+ ⏚

500 V
16 A

Identification	Wire cross section (mm²)	Part number male	Part number female	Drawing Dimensions in mm
Han-Eco®, Screw terminal, with wire protection 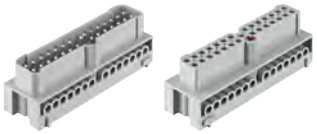	0.75 – 2.5	19 41 028 2601	19 41 028 2701	male 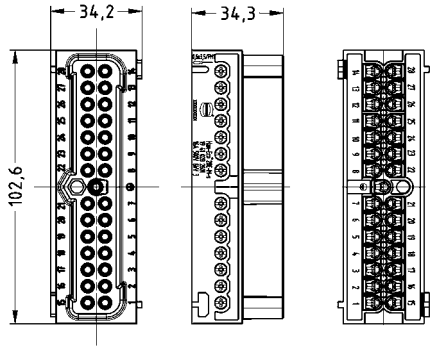 female 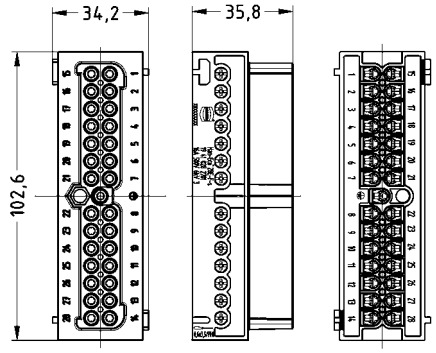
Coding element, plastic		09 12 000 9901	09 12 000 9902	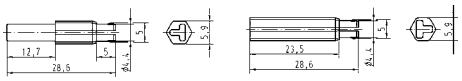

Features

- Available with integrated cable gland
- Optional PE contact module to hold the protective ground conductor
- Not mating compatible with series Han® B
- Capable for applications according protection class II

Technical characteristics

Limiting temperatures	-40 °C ... 125 °C
Flammability (hoods/housings) acc. to UL 94	V 0
Flammability acc. to NFF 16 101 / 16 102	F2 / I3
Flammability acc. to EN 45 545-2:2013	Class R22: HL1, HL2, Class R23: HL1, HL2, HL3, Class R24: HL1, HL2, HL3
Flammability (locking lever) acc. to UL 94	V 0
Degree of protection acc. to IEC 60529	IP65
Material (hoods/housings)	polyamide, fibre-glass reinforced
Colour (hoods/housings)	RAL 9005 (black)
Material (locking lever)	polyamide, fibre-glass reinforced
Colour (locking lever)	RAL 9005 (black)
Material (seal)	NBR

Specifications and approvals

IEC 61984

GL

double locking lever

Identification	Cable entry	Part number	Drawing Dimensions in mm
Han-Eco®, Hoods, side entry	1xM32	19 41 006 0522	
Han-Eco®, Hoods, top entry	1xM32	19 41 006 0422	
Han-Eco®, Hood with integrated cable gland, side entry	1xM32	19 41 106 0522	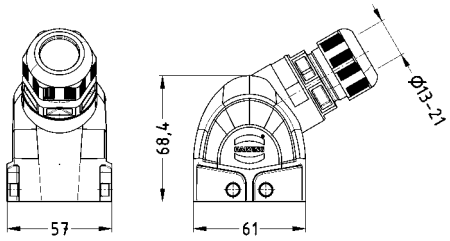
Han-Eco®, Hood with integrated cable gland, top entry	1xM32	19 41 106 0422	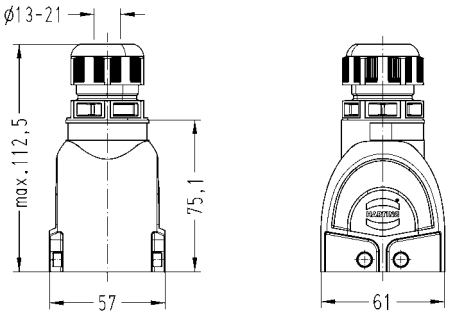
Han-Eco®, Protection cover for hoods		19 41 006 5406	
Han-Eco®, Protection cover for hoods, with securing flex		19 41 006 5407	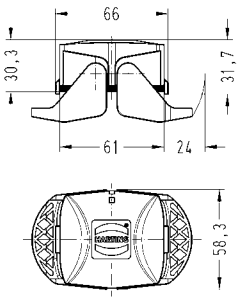

Han-Eco

Identification	Cable entry	Part number	Drawing Dimensions in mm
Han-Eco®, Bulkhead mounted housings 		19 41 006 0301	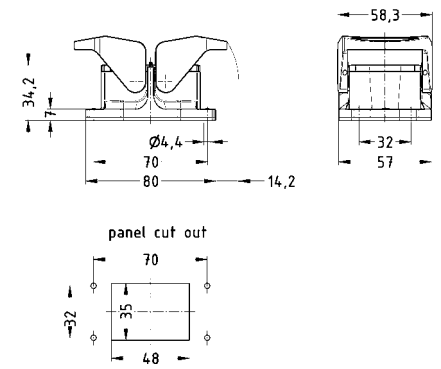
Han-Eco®, Surface mounted housings, side entry	1xM32 2xM32	19 41 006 0232 19 41 006 0272	
Han-Eco®, Surface mounted housings with integrated cable gland, side entry 	1xM32 2xM32	19 41 106 0232 19 41 106 0272	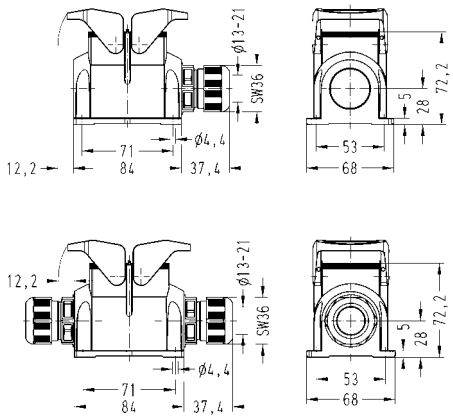
Han-Eco®, Cable to cable housings, top entry	1xM32	19 41 006 0722	
Han-Eco®, Cable to cable housings with integrated cable gland, top entry 	1xM32	19 41 106 0722	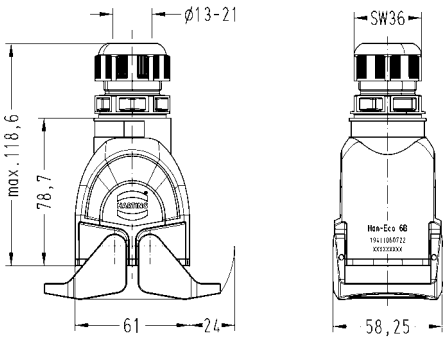

Han-Eco

Identification	Cable entry	Part number	Drawing Dimensions in mm
Han-Eco®, Protection cover for housings, with securing flex 		19 41 006 5404	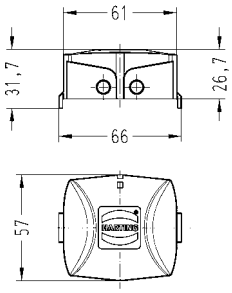
Han-Eco®, Protection cover for housings 		19 41 006 5405	

double locking lever

Identification	Cable entry	Part number	Drawing Dimensions in mm
Han-Eco®, Hoods, side entry	1xM32	19 41 010 0522	
Han-Eco®, Hoods, top entry	1xM32	19 41 010 0422	
Han-Eco®, Hood with integrated cable gland, side entry	1xM32	19 41 110 0522	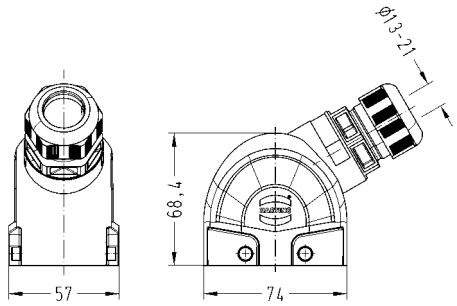
Han-Eco®, Hood with integrated cable gland, top entry	1xM32	19 41 110 0422	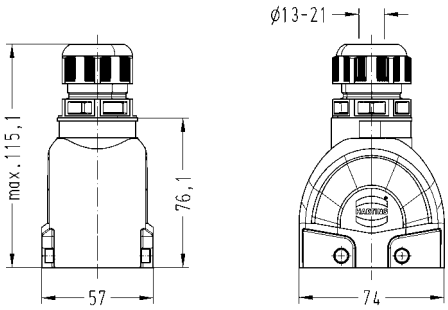
Han-Eco®, Protection cover for hoods		19 41 010 5406	
Han-Eco®, Protection cover for hoods, with securing flex		19 41 010 5407	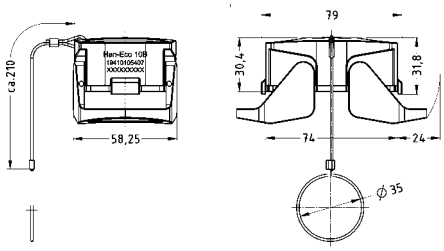

Han-Eco

Identification	Cable entry	Part number	Drawing Dimensions in mm
Han-Eco®, Bulkhead mounted housings 		19 41 010 0301	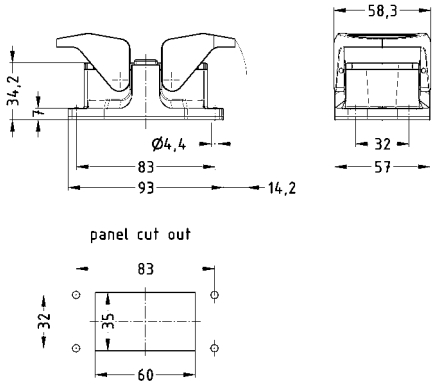
Han-Eco®, Surface mounted housings, side entry	1xM32 2xM32	19 41 010 0232 19 41 010 0272	
Han-Eco®, Surface mounted housings with integrated cable gland, side entry 	1xM32 2xM32	19 41 110 0232 19 41 110 0272	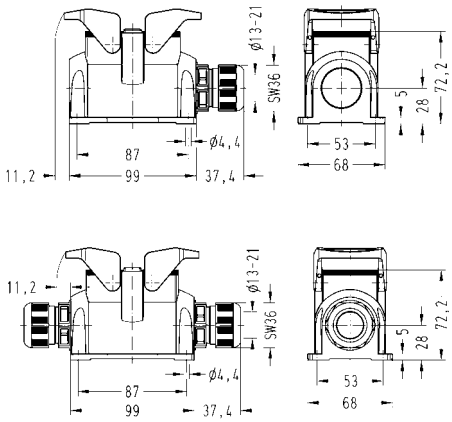
Han-Eco®, Cable to cable housings, top entry	1xM32	19 41 010 0722	
Han-Eco®, Cable to cable housings with integrated cable gland, top entry 	1xM32	19 41 110 0722	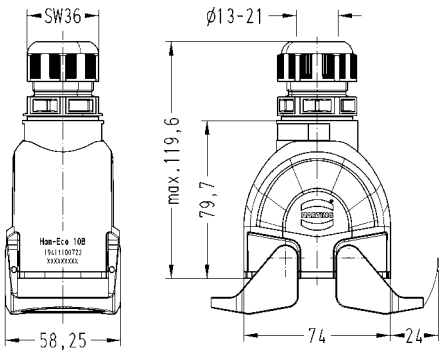

Han-Eco

Identification	Cable entry	Part number	Drawing Dimensions in mm
Han-Eco®, Protection cover for housings, with securing flex 		19 41 010 5404	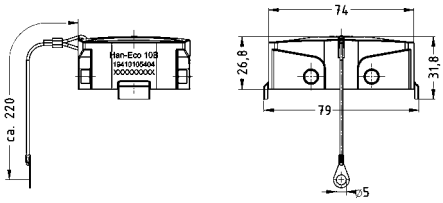
Han-Eco®, Protection cover for housings 		19 41 010 5405	

double locking lever

Identification	Cable entry	Part number	Drawing Dimensions in mm
Han-Eco®, Hoods, side entry	1xM40	19 41 016 0523	
Han-Eco®, Hoods, top entry	1xM40	19 41 016 0423	
Han-Eco®, Hood with integrated cable gland, side entry	1xM40	19 41 116 0523	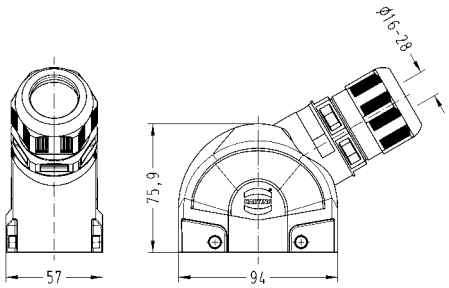
Han-Eco®, Hood with integrated cable gland, top entry	1xM40	19 41 116 0423	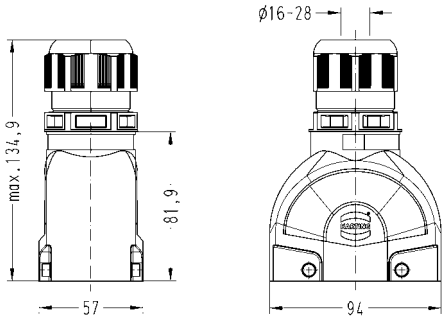
Han-Eco®, Protection cover for hoods		19 41 016 5406	
Han-Eco®, Protection cover for hoods, with securing flex		19 41 016 5407	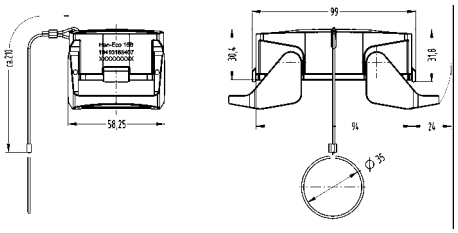

Han-Eco

Identification	Cable entry	Part number	Drawing Dimensions in mm
Han-Eco®, Bulkhead mounted housings 		19 41 016 0301	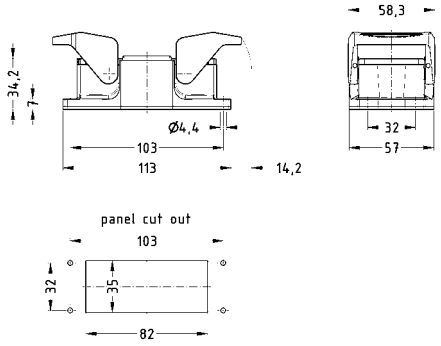
Han-Eco®, Surface mounted housings, side entry	1xM40 2xM40	19 41 016 0233 19 41 016 0273	
Han-Eco®, Surface mounted housings with integrated cable gland, side entry 	1xM40 2xM40	19 41 116 0233 19 41 116 0273	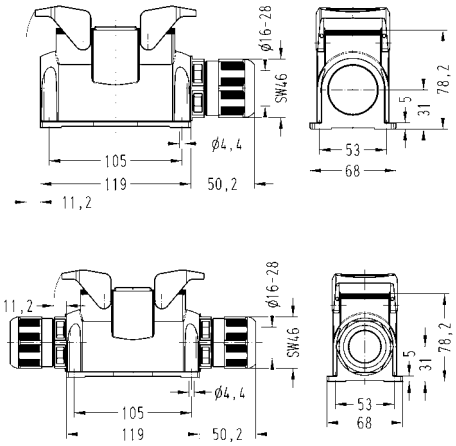
Han-Eco®, Cable to cable housings, top entry	1xM40	19 41 016 0723	
Han-Eco®, Cable to cable housings with integrated cable gland, top entry 	1xM40	19 41 116 0723	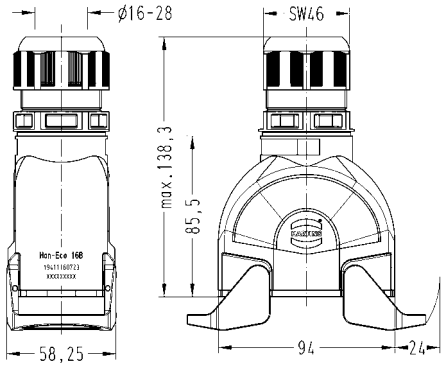
Han-Eco®, Protection cover for housings, with securing flex 		19 41 016 5404	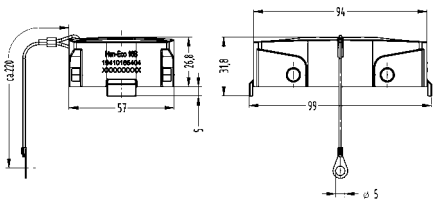

Han-Eco

Identification	Cable entry	Part number	Drawing Dimensions in mm
Han-Eco®, Protection cover for housings 		19 41 016 5405	

double locking lever

Identification	Cable entry	Part number	Drawing Dimensions in mm
Han-Eco®, Hoods, side entry	1xM40	19 41 024 0523	
Han-Eco®, Hoods, top entry	1xM40	19 41 024 0423	
Han-Eco®, Hood with integrated cable gland, side entry	1xM40	19 41 124 0523	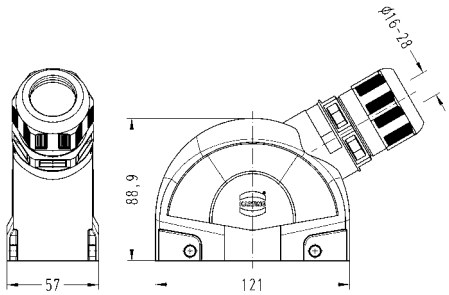
Han-Eco®, Hood with integrated cable gland, top entry	1xM40	19 41 124 0423	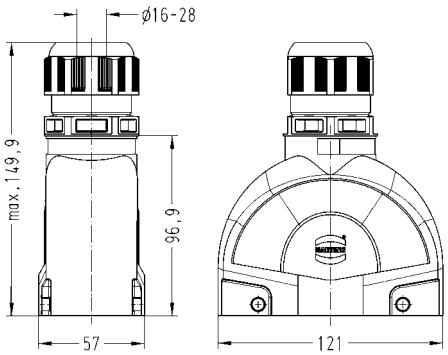
Han-Eco®, Protection cover for hoods		19 41 024 5406	
Han-Eco®, Protection cover for hoods, with securing flex		19 41 024 5407	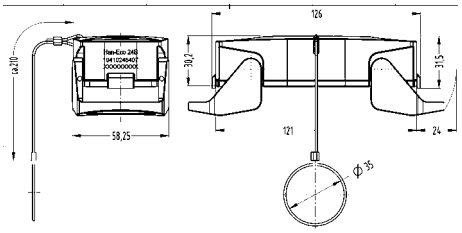

Han-Eco

Identification	Cable entry	Part number	Drawing Dimensions in mm
Han-Eco®, Bulkhead mounted housings 		19 41 024 0301	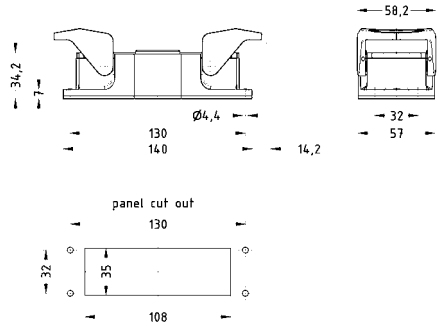
Han-Eco®, Surface mounted housings, side entry	1xM40 2xM40	19 41 024 0233 19 41 024 0273	
Han-Eco®, Surface mounted housings with integrated cable gland, side entry 	1xM40 2xM40	19 41 124 0233 19 41 124 0273	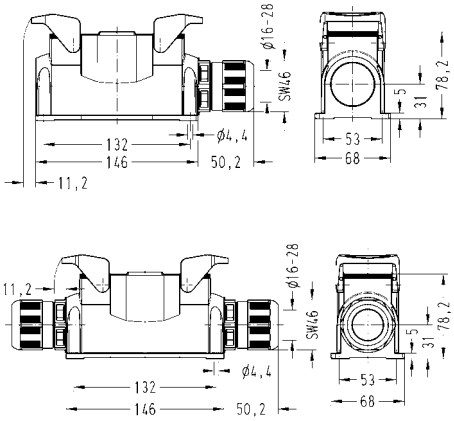
Han-Eco®, Cable to cable housings, top entry	1xM40	19 41 024 0723	
Han-Eco®, Cable to cable housings with integrated cable gland, top entry 	1xM40	19 41 124 0723	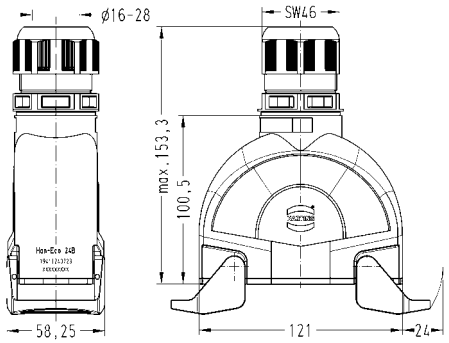
Han-Eco®, Protection cover for housings, with securing flex 		19 41 024 5404	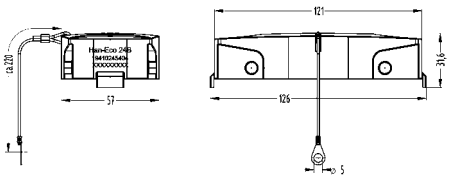

Han-Eco

Identification	Cable entry	Part number	Drawing Dimensions in mm
Han-Eco®, Protection cover for housings 		19 41 024 5405	

Features

- Available with integrated cable gland
- Optional PE contact module to hold the protective ground conductor
- Not mating compatible with series Han® B

Technical characteristics

Limiting temperatures	-40 °C ... 125 °C
Flammability (hoods/housings) acc. to UL 94	V 0
Flammability acc. to NFF 16 101 / 16 102	F2 / I3
Flammability acc. to EN 45 545-2:2013	Class R22: HL1, HL2, Class R23: HL1, HL2, HL3, Class R24: HL1, HL2, HL3
Flammability (locking lever) acc. to UL 94	V 0
Degree of protection acc. to IEC 60529	IP65
Material (hoods/housings)	polyamide, fibre-glass reinforced
Colour (hoods/housings)	RAL 9005 (black)
Material (locking lever)	polyamide, fibre-glass reinforced
Colour (locking lever)	RAL 9005 (black)
Material (seal)	FPM
Colour (seal)	RAL 7001 (silver-grey)

Specifications and approvals

IEC 61984

GL

double locking lever

Identification	Cable entry	Part number	Drawing Dimensions in mm
Han-Eco®, Hoods, side entry	1xM32	19 41 006 0522	
Han-Eco®, Hoods, top entry	1xM32	19 41 006 0422	
Han-Eco®, Hood with integrated cable gland, side entry	1xM32	19 41 106 0522	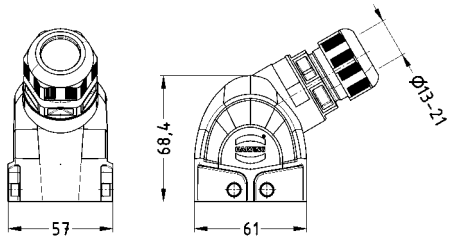
Han-Eco®, Hood with integrated cable gland, top entry	1xM32	19 41 106 0422	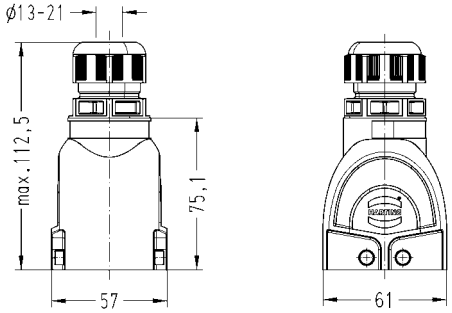
Han-Eco®, Protection cover for hoods		19 41 206 5406	
Han-Eco®, Protection cover for hoods, with securing flex		19 41 206 5407	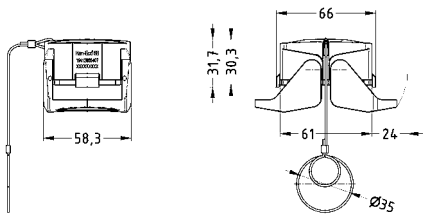

Han-Eco

Identification	Cable entry	Part number	Drawing Dimensions in mm
Han-Eco®, Bulkhead mounted housings 		19 41 206 0301	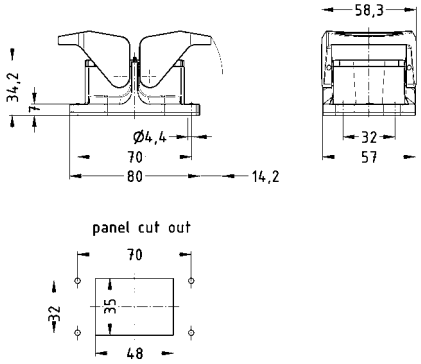
Han-Eco®, Surface mounted housings, side entry	1xM32 2xM32	19 41 206 0232 19 41 206 0272	
Han-Eco®, Surface mounted housings with integrated cable gland, side entry 	1xM32 2xM32	19 41 306 0232 19 41 306 0272	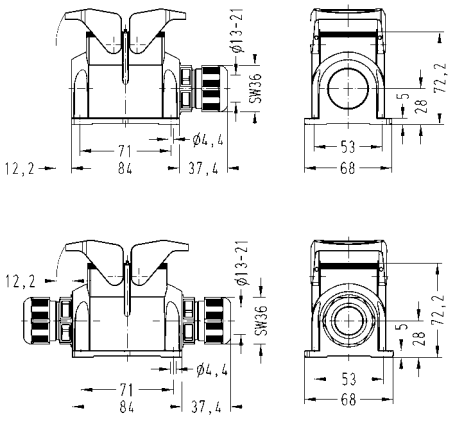
Han-Eco®, Cable to cable housings, top entry	1xM32	19 41 206 0722	
Han-Eco®, Cable to cable housings with integrated cable gland, top entry 	1xM32	19 41 306 0722	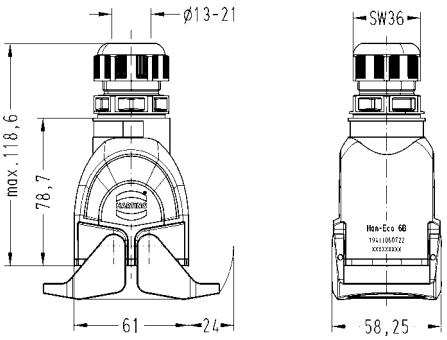

Han-Eco

Identification	Cable entry	Part number	Drawing Dimensions in mm
Han-Eco®, Protection cover for housings, with securing flex 		19 41 006 5404	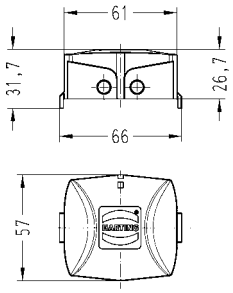
Han-Eco®, Protection cover for housings 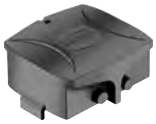		19 41 006 5405	

double locking lever

Identification	Cable entry	Part number	Drawing Dimensions in mm
Han-Eco®, Hoods, side entry	1xM32	19 41 010 0522	
Han-Eco®, Hoods, top entry	1xM32	19 41 010 0422	
Han-Eco®, Hood with integrated cable gland, side entry	1xM32	19 41 110 0522	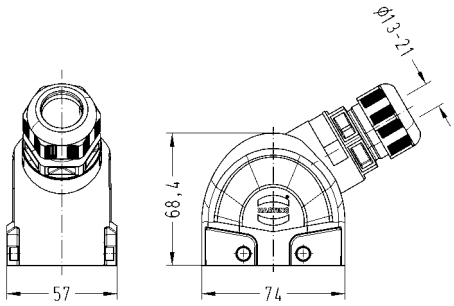
Han-Eco®, Hood with integrated cable gland, top entry	1xM32	19 41 110 0422	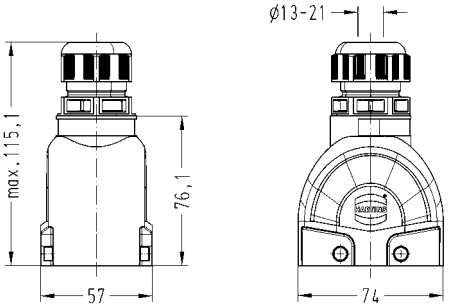
Han-Eco®, Protection cover for hoods		19 41 210 5406	
Han-Eco®, Protection cover for hoods, with securing flex		19 41 210 5407	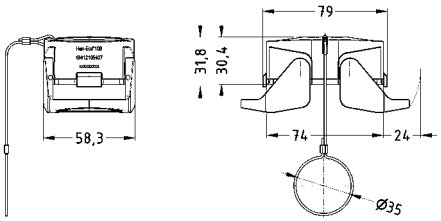

Han-Eco

Identification	Cable entry	Part number	Drawing Dimensions in mm
Han-Eco®, Bulkhead mounted housings 		19 41 210 0301	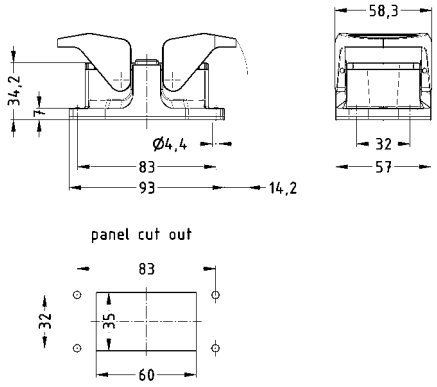
Han® B, Surface mounted housings, side entry	1xM32 2xM32	19 41 210 0232 19 41 210 0272	
Han® B, Surface mounted housings with integrated cable gland, side entry 	1xM32 2xM32	19 41 310 0232 19 41 310 0272	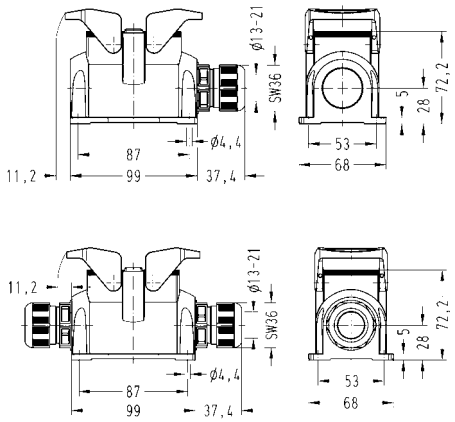
Han-Eco®, Cable to cable housings, top entry	1xM32	19 41 210 0722	
Han-Eco®, Cable to cable housings with integrated cable gland, top entry 	1xM32	19 41 310 0722	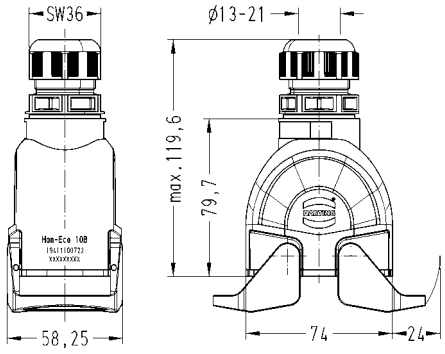

Han-Eco

Identification	Cable entry	Part number	Drawing Dimensions in mm
Han-Eco®, Protection cover for housings, with securing flex 		19 41 010 5404	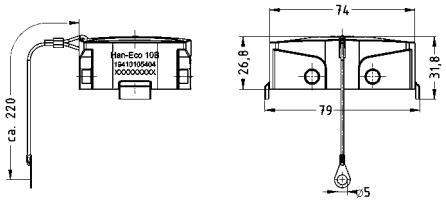
Han-Eco®, Protection cover for housings 		19 41 010 5405	

double locking lever

Identification	Cable entry	Part number	Drawing Dimensions in mm
Han-Eco®, Hoods, side entry	1xM40	19 41 016 0523	
Han-Eco®, Hoods, top entry	1xM40	19 41 016 0423	
Han-Eco®, Hood with integrated cable gland, side entry	1xM40	19 41 116 0523	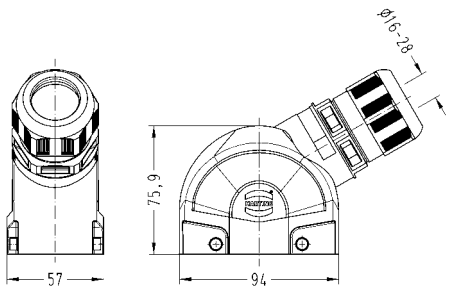
Han-Eco®, Hood with integrated cable gland, top entry	1xM40	19 41 116 0423	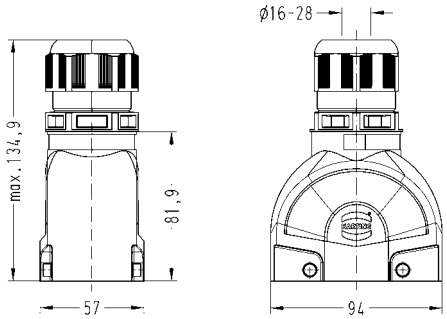
Han-Eco®, Protection cover for hoods		19 41 216 5406	
Han-Eco®, Protection cover for hoods, with securing flex		19 41 216 5407	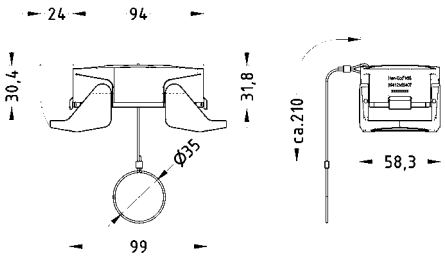

Han-Eco

Identification	Cable entry	Part number	Drawing Dimensions in mm
Han® B, Bulkhead mounted housings 		19 41 216 0301	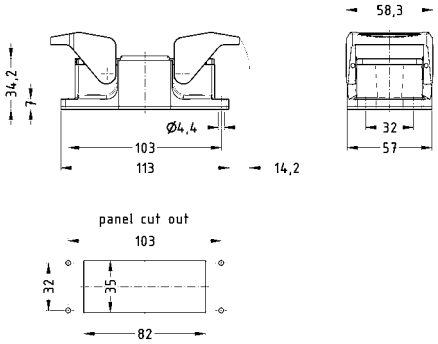
Han-Eco®, Surface mounted housings, side entry	1xM40 2xM40	19 41 216 0233 19 41 216 0273	
Han-Eco®, Surface mounted housings with integrated cable gland, side entry 	1xM40 2xM40	19 41 316 0233 19 41 316 0273	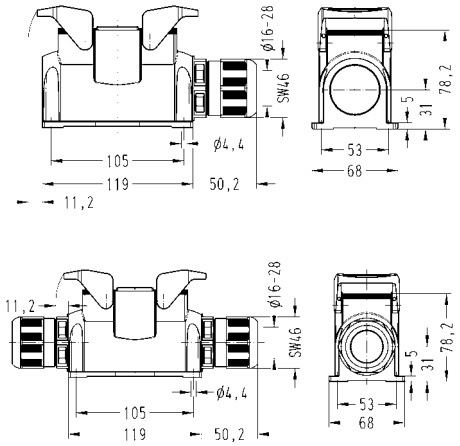
Han-Eco®, Cable to cable housings, top entry	1xM40	19 41 216 0723	
Han-Eco®, Cable to cable housings with integrated cable gland, top entry 	1xM40	19 41 316 0723	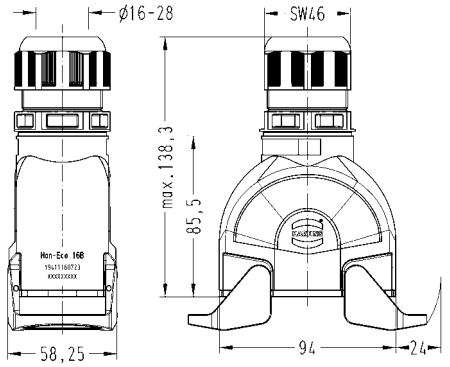
Han-Eco®, Protection cover for housings, with securing flex 		19 41 016 5404	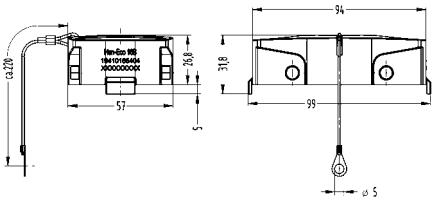

Han-Eco

Identification	Cable entry	Part number	Drawing Dimensions in mm
Han-Eco®, Protection cover for housings 		19 41 016 5405	

double locking lever

Identification	Cable entry	Part number	Drawing Dimensions in mm
Han-Eco®, Hoods, side entry	1xM40	19 41 024 0523	
Han-Eco®, Hoods, top entry	1xM40	19 41 024 0423	
Han-Eco®, Hood with integrated cable gland, side entry	1xM40	19 41 124 0523	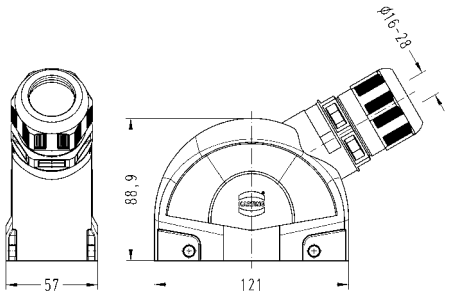
Han-Eco®, Hood with integrated cable gland, top entry	1xM40	19 41 124 0423	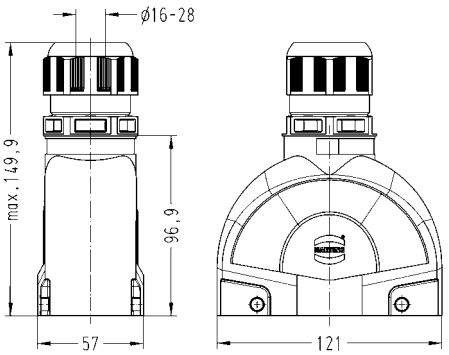
Han-Eco®, Protection cover for hoods		19 41 224 5406	
Han-Eco®, Protection cover for hoods, with securing flex		19 41 224 5407	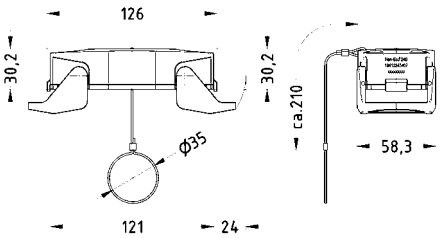

Han-Eco

Identification	Cable entry	Part number	Drawing Dimensions in mm
Han-Eco®, Bulkhead mounted housings 		19 41 224 0301	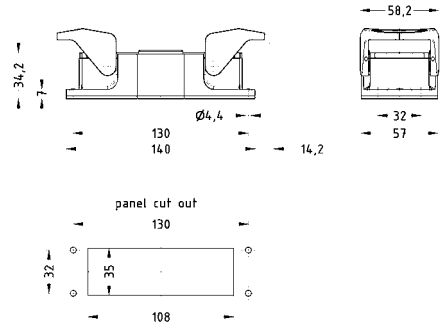
Han® B, Surface mounted housings, side entry	1xM40 2xM40	19 41 224 0233 19 41 224 0273	
Han® B, Surface mounted housings with integrated cable gland, side entry 	1xM40 2xM40	19 41 324 0233 19 41 324 0273	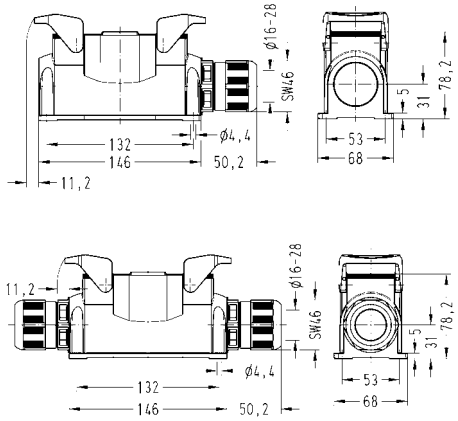
Han® B, Cable to cable housings, top entry	1xM40	19 41 224 0723	
Han® B, Cable to cable housings with integrated cable gland 	1xM40	19 41 324 0723	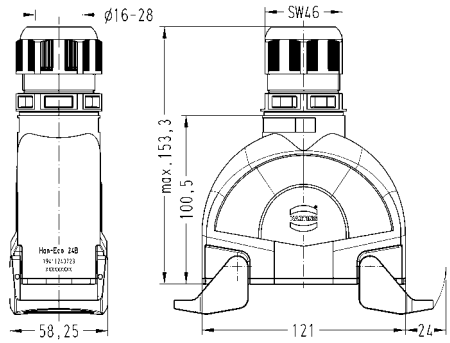
Han-Eco®, Protection cover for housings, with securing flex 		19 41 024 5404	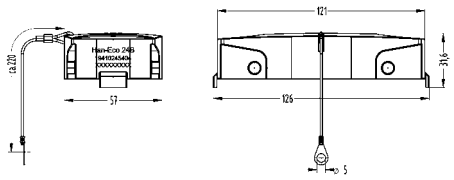

Han-Eco

Identification	Cable entry	Part number	Drawing Dimensions in mm
Han-Eco®, Protection cover for housings 		19 41 024 5405	

Identification	Wire cross section (mm²)	Part number male	Part number female	Drawing Dimensions in mm
Han-Eco®, PE contact module, with screw terminal with 09 99 000 0830 HARTING Crimping tool also cable up to 25 mm² with ferrule adaptable	1.5 – 16	19 41 001 2600	19 41 001 2700	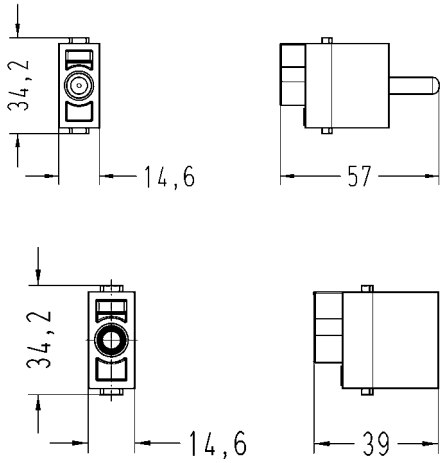

Technical characteristics

Material (accessories) plastic

Technical characteristics

Colour (accessories) black

Identification	Size	Part number	Drawing Dimensions in mm
Cable gland	M32 M40	19 41 000 5131 19 41 000 5141	
Han-Eco®, Locking lever, for all sizes		19 41 000 5201	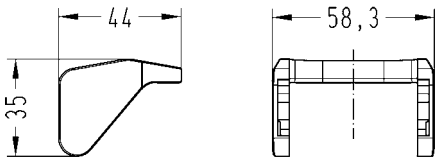
Han-Eco®, Reduction sealing insert	M32 M40	19 41 000 5132 19 41 000 5142	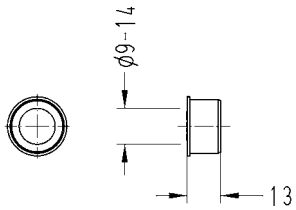 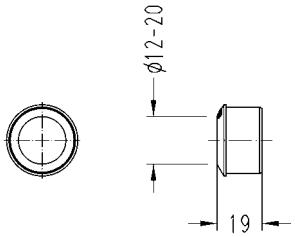

Han-Eco

Technical characteristics

Material (accessories) NBR

Technical characteristics

Colour (accessories) black

Identification	Size	Part number	Drawing Dimensions in mm
Han-Eco®, Flange gasket, NBR	6 B 10 B 16 B 24 B	19 41 000 9801 19 41 000 9802 19 41 000 9803 19 41 000 9804	
Han-Eco®, Profile gasket, NBR	6 B 10 B 16 B 24 B	19 41 000 9901 19 41 000 9902 19 41 000 9903 19 41 000 9904	

Photo courtesy: Robolights

Installation of multiple services through a single lightweight connector assembly

When the Grand Opera House, York in the United Kingdom wanted to upgrade its 12 motorised hoists, drive system and control, a UK custom panel builder put together a design that would allow individual speed and direction control of each of the flying bars from a central console. They manufactured the control console, connection point and interconnecting cables along with a custom wheeled frame to allow easy movement of the console around the stage. This project made use of HARTING's recently introduced modular Han-Eco® system connectors which allow the integration of multiple services, contact types and ratings into a single connector assembly.

Contents | Page

Hoods/Housings, metal Han® 3 A	**31.4**
Hoods/Housings, thermoplastic Han® 3 A	**31.10**
Standard hoods/housings Han® 10-32 A	**31.16**
Standard hoods/housings Han® B	**31.26**
Han® Easy Hood hoods/housings	**31.73**
Han-Drive® hoods/housings	**31.77**
Han® 3 M hoods/housings	**31.80**
Han® M hoods/housings	**31.84**
Han® 3 EMC hoods/housings	**31.97**
Han® EMC hoods/housings	**31.101**
Han® EMC/B hoods/housings	**31.108**
Han® 3 HPR hoods/housings	**31.118**
Han® HPR hoods/housings	**31.127**
Han-INOX® hoods/housings	**31.146**

Type of hoods/housings

Han® 3 A Standard Hoods/Housings
Metal hoods/housings for industrial applications

Material	zinc die-cast
Colour	RAL 7037 (grey)
Surface	powder-coated
Locking element	steel, zinc-plated
Lever type	lever, metal
Hoods/Housings seal	NBR
Limiting temperatures	-40 °C ... +125 °C
Flammability acc. to UL 94	V 0
Degree of protection acc. to DIN EN 60 529 for coupled connector	IP44 IP67 is achieved with seal screw 09 20 000 9918

Han-Drive® Housings for motor applications

Material	aluminium die-cast
Colour	non coloured / RAL 7037 (grey)
Surface	electrical conductive / powder-coated / unpainted
Locking element	stainless steel
Lever type	Han-Easy Lock®
Hoods/Housings seal	NBR
Limiting temperatures	-40 °C ... +125 °C
Approval acc. to UL 50	NEMA Type 4/4X/12
Degree of protection acc. to DIN EN 60 529 for coupled connector	IP65

Han® 3 A Hoods/Housings
Plastic hoods/housings for industrial applications

Material	polycarbonate
Colour	RAL 7032 (light grey) / RAL 9005 (black)
Locking element	polyamide
Lever type	lever, plastic
Hoods/Housings seal	NBR
Limiting temperatures	-40 °C ... +125 °C
Approval acc. to UL 50	NEMA Type 4/4X/12
Flammability acc. to UL 94	V 0
Degree of protection acc. to DIN EN 60 529 for coupled connector	IP44 IP67 is achieved with seal screw 09 20 000 9918

Han® 3 M Hoods/Housings
Hoods/Housings for higher environmental requirements

Material	zinc die-cast
Colour	RAL 9005 (black)
Surface	
- Top coat	epoxy powder paint
Locking element	stainless steel
Lever type	lever, metal
Hoods/Housings seal	FPM
Limiting temperatures	-40 °C ... +125 °C
Corrosion resistance	ASTM B117-09 (500 h)
Degree of protection acc. to DIN EN 60 529 for coupled connector	IP44 IP67 is achieved with seal screw 09 20 000 9918

Han® Standard Hoods/Housings
Metal hoods/housings for industrial applications

Material	aluminium die-cast
Colour	RAL 7037 (grey)
Surface	powder-coated
Locking element	stainless steel
Lever type	Han-Easy Lock®
Hoods/Housings seal	NBR
Limiting temperatures	-40 °C ... +125 °C
Approval acc. to UL 50	NEMA Type 4/4X/12
Degree of protection acc. to DIN EN 60 529 for coupled connector	IP65

Han® M Hoods/Housings
Hoods/Housings for higher environmental requirements

Material	aluminium die-cast
Colour	RAL 9005 (black)
Surface	
- Top coat	epoxy powder paint
Locking element	stainless steel
Lever type	lever, metal
Hoods/Housings seal	FPM
Limiting temperatures	-40 °C ... +125 °C
Approval acc. to UL 50	NEMA Type 4/4X/12
Corrosion resistance	ASTM B117-09 (500 h)
Degree of protection acc. to DIN EN 60 529 for coupled connector	IP65

Han® 3 EMC Hoods/Housings
Hoods/Housings for higher EMC requirements

Material	zinc die-cast
Colour	non coloured
Surface	electrical conductive
Locking element	steel, zinc-plated
Lever type	lever, metal
Hoods/Housings seal	NBR
Limiting temperatures	-40 °C ... +125 °C
Degree of protection acc. to DIN EN 60 529 for coupled connector	IP44 IP67 is achieved with seal screw 09 20 000 9918

Han-INOX® Hoods/Housings
for higher corrosion requirements

Material	stainless steel
Colour	non coloured
Surface	electrical conductive
Locking element	stainless steel
Lever type	lever, metal
Hoods/Housings seal	NBR
Limiting temperatures	-40 °C ... +125 °C
Degree of protection acc. to DIN EN 60 529 for coupled connector	IP65
- Size Han® 3 A	IP44 IP67 is achieved with seal screw 09 20 000 9918

Han® EMC Hoods/Housings
Hoods/Housings for higher EMC requirements

Material	aluminium die-cast
Colour	non coloured
Surface	electrical conductive
Locking element	
- Screw locking	M5
- Material	stainless steel
- Tightening torque	3 Nm
Hoods/Housings seal	NBR
Limiting temperatures	-40 °C ... +125 °C
Approval acc. to UL 50	NEMA Type 4/4X/12
Degree of protection acc. to DIN EN 60 529 for coupled connector	IP65

Han® 3 HPR Hoods/Housings
Hoods/Housings for harsh environmental requirements

Material	zinc die-cast
Colour	RAL 9005 (black)
Surface	
- Top coat	epoxy powder paint / chromated
Locking element	
- Screw locking	M4
- Material	stainless steel
- Tightening torque	2 Nm
Hoods/Housings seal	NBR
Limiting temperatures	-40 °C ... +125 °C
Corrosion resistance	ASTM B117-09 (500 h)
Degree of protection acc. to DIN EN 60 529 for coupled connector	IP68 / IP69K

Attention
The sealing on the insert has to be removed.
The sealing screw of the insolation body must be replaced by the sealing screw of the hood.

Han® EMC/B Hoods/Housings
Hoods/Housings for higher EMC requirements

Material	
- Hoods/Housings	aluminium die-cast
- shielded frames	zinc die-cast alloy
Colour	non coloured
Surface	
- Hoods/Housings	electrical conductive
- shielded frames	electrical conductive
Locking element	stainless steel
Lever type	Han-Easy Lock®
Hoods/Housings seal	NBR
Limiting temperatures	-40 °C ... +125 °C
Approval acc. to UL 50	NEMA Type 4/4X/12
Degree of protection acc. to DIN EN 60 529 for coupled connector	IP65

Han® HPR Hoods/Housings
Hoods/Housings for harsh environmental requirements

Material	aluminium die-cast, corrosion resistant
Colour	RAL 9005 (black)
Surface	
- Top coat	epoxy powder paint
Locking element	
- Screw locking	M6
- Material	stainless steel
- Tightening torque	4 Nm
- Toggle locking	
- Material	stainless steel
Hoods/Housings seal	NBR
Limiting temperatures	-40 °C ... +125 °C
Approval acc. to UL 50	NEMA Type 4/4X/12
Corrosion resistance	ASTM B117-09 (500 h)
Degree of protection acc. to DIN EN 60 529 for coupled connector	IP68 / IP69K (does not apply to Han® 48 HPR)

Features

- Metal hoods/housings for industrial applications

Technical characteristics

Limiting temperatures	-40 °C ... 125 °C
Degree of protection acc. to IEC 60529	IP44 / IP67 is achieved with seal screw 09 20 000 9918
Material (hoods/housings)	zinc die-cast
Surface (hoods/housings)	powder-coated
Colour (hoods/housings)	RAL 7037 (grey)
Material (locking lever)	steel, zinc-plated
Material (seal)	NBR

Specifications and approvals

GL

Metal hoods/housings for industrial applications
double locking lever

Identification	Cable entry	Part number	Drawing Dimensions in mm
Han A® , Hoods, top entry	1xM20	19 20 003 1440	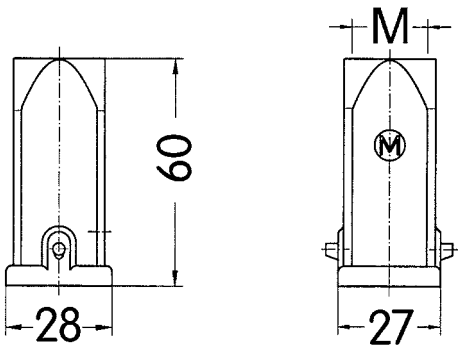
Han A® , Hoods, side entry	1xM20	19 20 003 1640	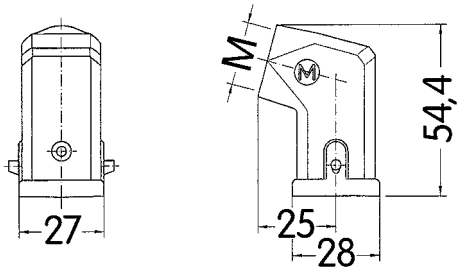
Han A® , Hood with integrated cable gland, top entry	6...12 mm 11...17 mm	19 20 003 1421 19 20 003 1422	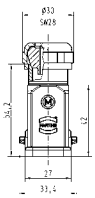
Han A® , Protection cover for hoods, for mounted female insert, metal, with securing flex, with sealing		09 20 003 5421	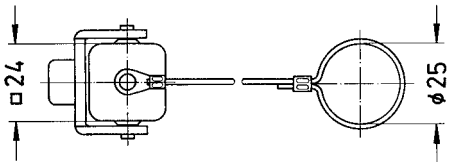

Identification	Cable entry	Part number	Drawing Dimensions in mm
Han A® , Protection cover for hoods, for mounted male insert or for mounted Han-Brid® insert, metal, with securing flex 		09 20 003 5422	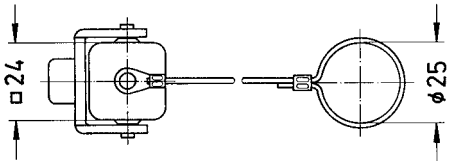
Han A® , Bulkhead mounted housings, straight 		09 20 003 0301	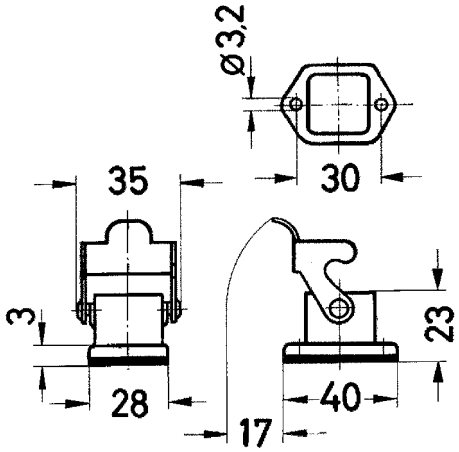 Panel cut out 22 x 22 mm
Han A® , Bulkhead mounted housings, straight, with metal cover, for male inserts 		09 20 003 0305	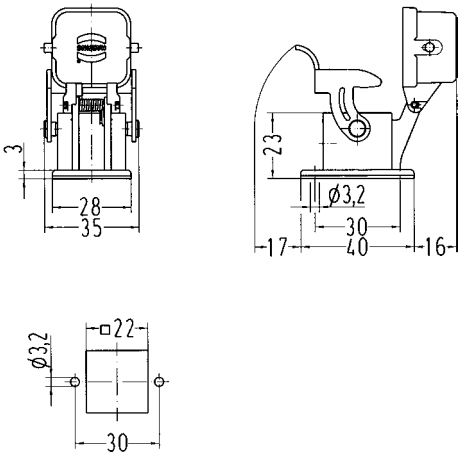 Panel cut out 22 x 22 mm
Han A® , Bulkhead mounted housings, straight, with sealing, for female inserts 		09 20 003 0306	

Identification	Cable entry	Part number	Drawing Dimensions in mm
Han A® , Bulkhead mounted housings, angled, 2 fixing screws 		09 20 003 0801	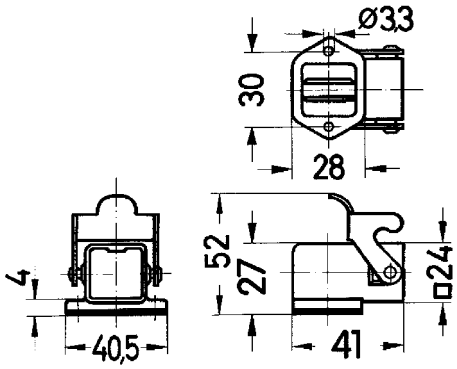 Panel cut out 22 x 22 mm
Han A® , Bulkhead mounted housings, angled, 4 fixing screws 		09 20 003 0810	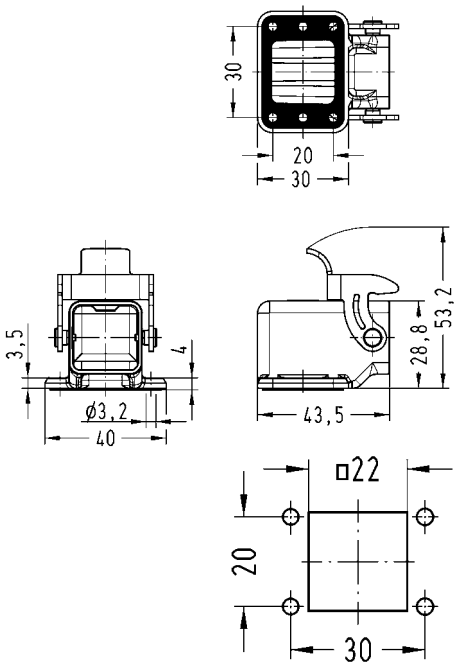
Han A® , Surface mounted housings, top entry, open bottom 	1xM20	19 20 003 1250	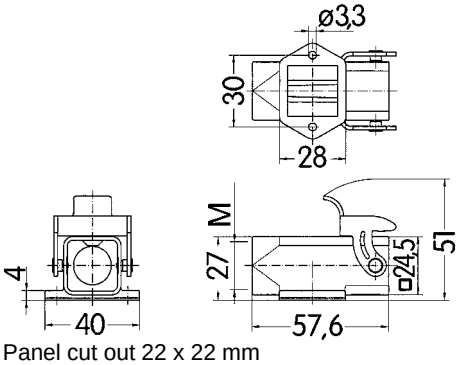 Panel cut out 22 x 22 mm

Identification	Cable entry	Part number	Drawing Dimensions in mm
Han A® , Surface mounted housings, top entry, bottom closed 	1xM20	19 20 003 1252	
Han A® , Cable to cable housings, top entry 	1xM20	19 20 003 1750	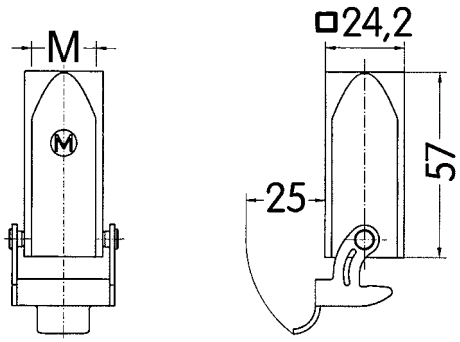
Han A® , Protection cover for cable to cable housings, for mounted female insert or for mounted Han-Brid® insert, metal, with securing flex, with sealing 		09 20 003 5427	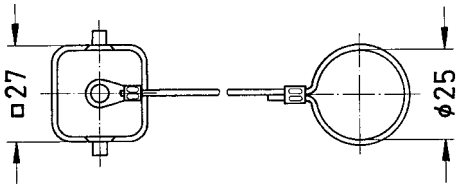
Han A® , Protection cover for cable to cable housings, metal, with securing flex 		09 20 003 5428	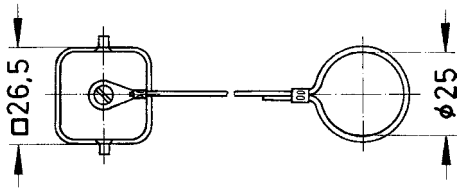

Identification	Cable entry	Part number	Drawing Dimensions in mm
Han A® , Panel feed through housings, top entry 	1xM20	19 20 003 1120	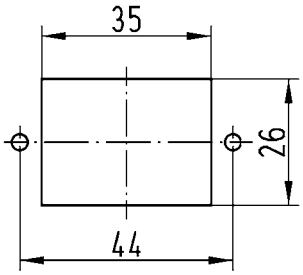 Panel cut out 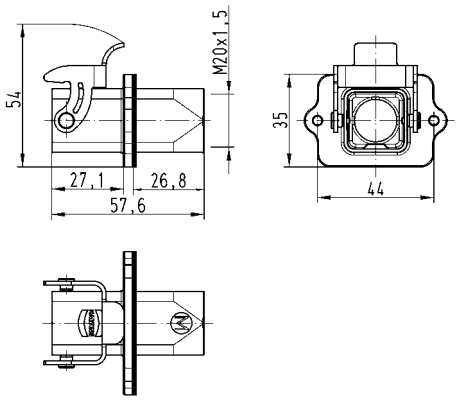
Han A® , Protection cover for housings, for mounted female insert or for mounted Han-Brid® insert, metal, with securing flex, with sealing 		09 20 003 5425	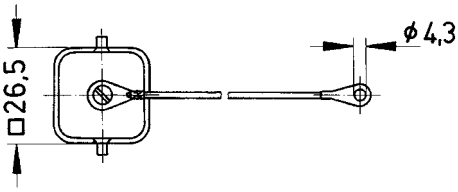
Han A® , Protection cover for housings, for mounted male insert, metal, with securing flex 		09 20 003 5426	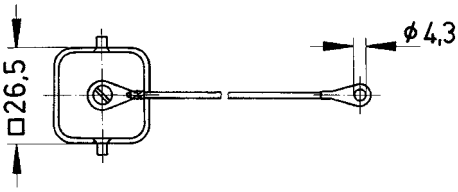
Han A® , Screw mounted housings, top entry 	1xM20	19 20 003 1150	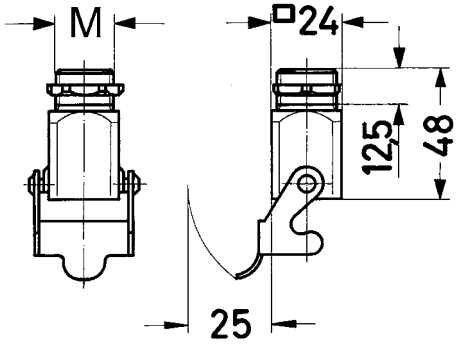

Features

- Plastic hoods/housings for industrial applications

Technical characteristics

Limiting temperatures	-40 °C ... 125 °C
Flammability (hoods/housings) acc. to UL 94	V 0
Flammability (locking lever) acc. to UL 94	V 0
Protection class acc. to UL 50	NEMA type 4/4X/12
Degree of protection acc. to IEC 60529	IP44 / IP67 is achieved with seal screw 09 20 000 9918
Material (hoods/housings)	polycarbonate
Colour (hoods/housings)	RAL 7032 (light grey), RAL 9005 (black)
Material (locking lever)	polyamide
Colour (locking lever)	RAL 7032 (light grey), RAL 9005 (black)
Material (seal)	NBR

Specifications and approvals

GL

Plastic hoods/housings for industrial applications
double locking lever

Identification	Cable entry	Part number	Drawing Dimensions in mm
Han A® , Hoods, top entry	1xM20	19 20 003 0420	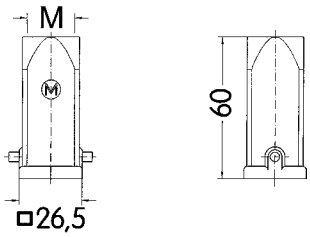
Han A® , Hoods, top entry, black	1xM20	19 20 003 0427	
Han A® , Hoods, side entry	1xM20	19 20 003 0620	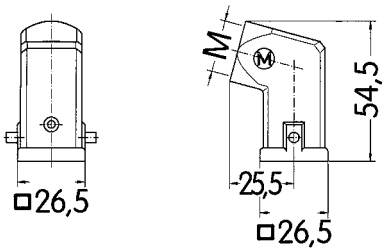
Han A® , Hoods, side entry, black	1xM20	19 20 003 0627	
Han A® , Hood with integrated cable gland, top entry		19 20 003 0410	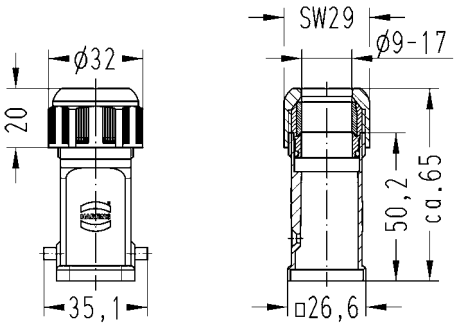
Han A® , Hood with integrated cable gland, top entry, black		19 20 003 0418	

Identification	Cable entry	Part number	Drawing Dimensions in mm
Han A® , Protection cover for hoods, for mounted female insert or for mounted Han-Brid® insert, plastic, with securing flex, with sealing		09 20 003 5441	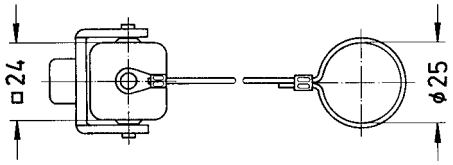
Han A® , Protection cover for hoods, for mounted male insert or for mounted Han-Brid® insert, plastic, with securing flex 		09 20 003 5442	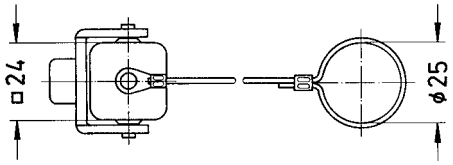
Han A® , Bulkhead mounted housings, straight 		09 20 003 0320	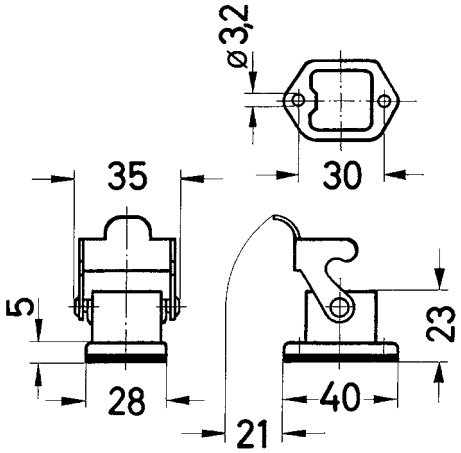 Panel cut out 22 x 22 mm
Han A® , Bulkhead mounted housings, angled 		09 20 003 0820	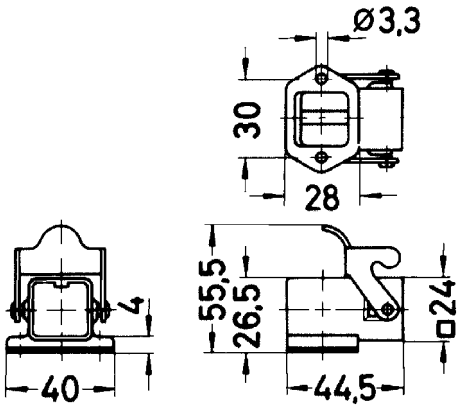 Panel cut out 22 x 22 mm
Han A® , Bulkhead mounted housings, straight, black		09 20 003 0327	
Han A® , Bulkhead mounted housings, angled, black		09 20 003 0827	

Identification	Cable entry	Part number	Drawing Dimensions in mm
Han A® , Surface mounted housings, top entry 	1xM20	19 20 003 0220	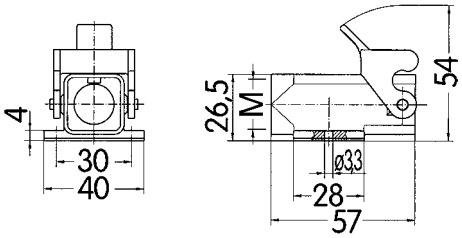 Panel cut out 22 x 22 mm
Han A® , Surface mounted housings, top entry, black	1xM20	19 20 003 0227	
Han A® , Cable to cable housings, top entry 	1xM20	19 20 003 0720	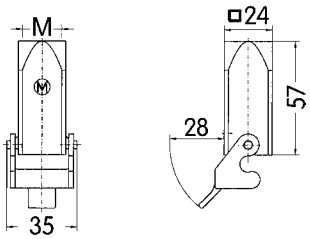
Han A® , Cable to cable housings, top entry, black	1xM20	19 20 003 0727	
Han A® , Protection cover for cable to cable housings, for mounted female insert, plastic, with sealing, with securing flex 		09 20 003 5447	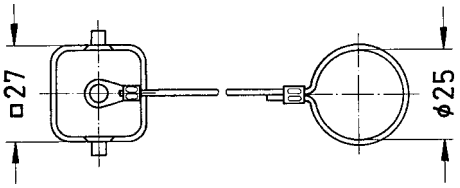
Han A® , Protection cover for cable to cable housings, for mounted male insert, plastic, with securing flex 		09 20 003 5448	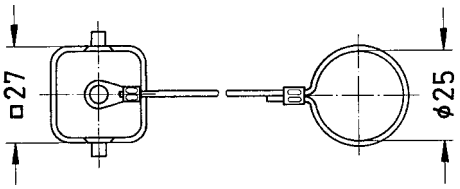

Identification	Cable entry	Part number	Drawing Dimensions in mm
Han A® , Protection cover for housings, for mounted female insert, plastic, with sealing, with securing flex 		09 20 003 5445	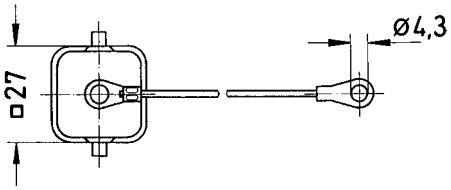
Han A® , Protection cover for housings, for mounted male insert, plastic, with securing flex 		09 20 003 5446	
Han A® , Protection cover for housings, for mounted female insert, plastic, with sealing, with securing flex, black 		09 20 003 5449	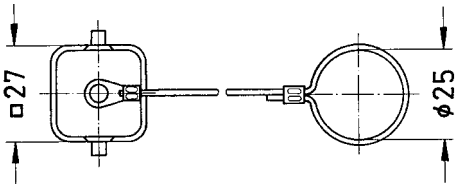
Han A® , Protection cover for housings, for mounted male insert, plastic, with securing flex, black 		09 20 003 5450	
Han A® , Protection cover for housings, plastic 		09 20 003 5407	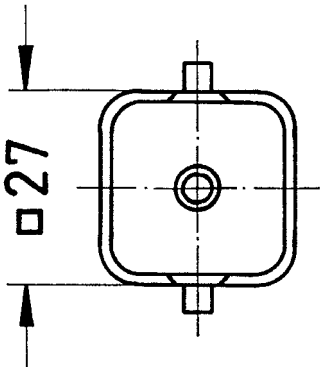

Identification	Cable entry	Part number	Drawing Dimensions in mm
Han A® , Protection cover for housings, for mounted female insert or for mounted Han-Brid® insert, plastic, with sealing 		09 20 003 5408	
Han A® , Protection cover, for mounted female insert or for mounted Han-Brid® insert, plastic, with sealing, black 		09 20 003 5409	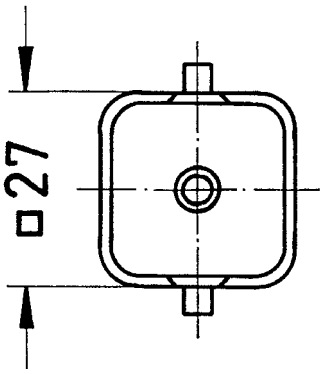

Features

- Metal hoods/housings for industrial applications

Technical characteristics

Limiting temperatures	-40 °C ... 125 °C
Flammability (locking lever) acc. to UL 94	V 0
Protection class acc. to UL 50	NEMA type 4/4X/12
Degree of protection acc. to IEC 60529	IP65
Material (hoods/housings)	aluminium
Colour (hoods/housings)	RAL 7037 (grey)
Material (locking lever)	polycarbonate + stainless steel
Colour (locking lever)	RAL 7037 (grey)
Material (seal)	NBR

Specifications and approvals

GL

Metal hoods/housings for industrial applications
single locking lever

Identification	Cable entry	Part number Low construction	Part number High construction	Drawing Dimensions in mm
Han A®, Hoods, top entry 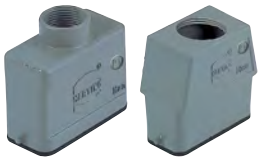	1xM20 1xM25	19 20 010 1440	19 20 010 0446	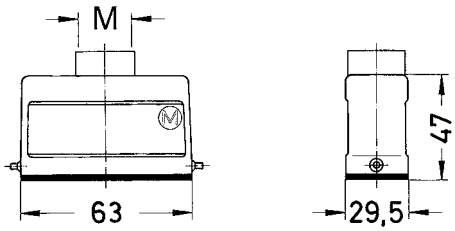 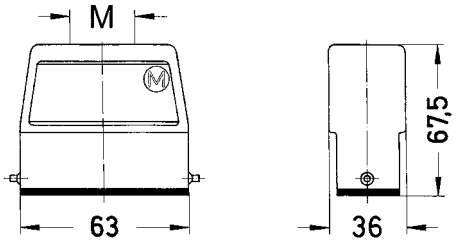
Han A®, Hoods, side entry	1xM20 1xM25	19 20 010 1540	19 20 010 0546	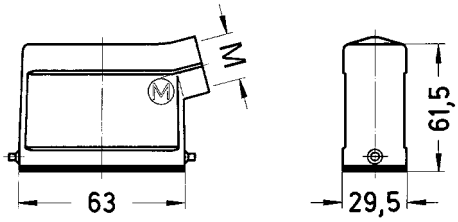 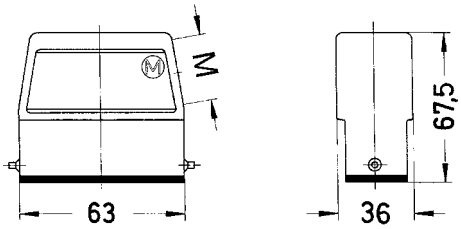
Han A®, Hoods, without cable entry			09 20 010 0801	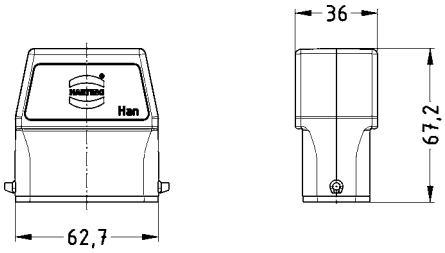

Identification	Cable entry	Part number Low construction	Part number High construction	Drawing Dimensions in mm
Han A® , Protection cover for hoods, metal, Han-Easy Lock®, with securing flex 		09 20 010 5423	09 20 010 5423	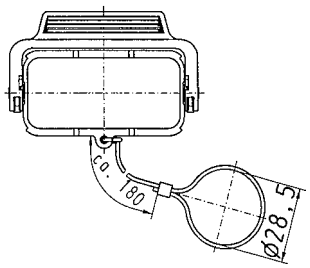
Han A® , Bulkhead mounted housings, Han-Easy Lock®, with thermo-plastic cover 		09 20 010 0321		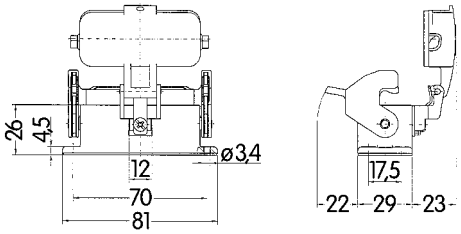
Han A® , Bulkhead mounted housings, Han-Easy Lock® 		09 20 010 0301		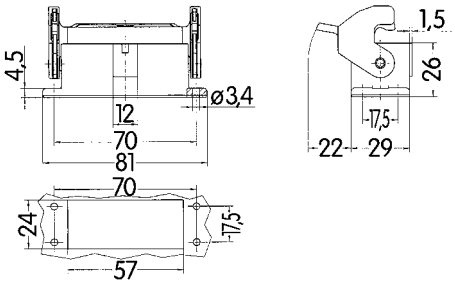 Panel cut out
Han A® , Surface mounted housings, side entry, Han-Easy Lock® 	1xM25 2xM20	19 20 010 0251 19 20 010 0290		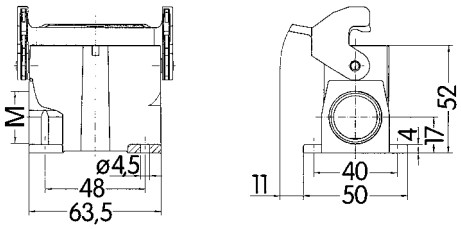
Han A® , Surface mounted housings, side entry, Han-Easy Lock®, with thermo-plastic cover 	2xM20		19 20 010 0295	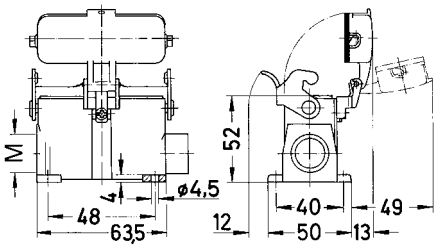

Hoods Housings

Identification	Cable entry	Part number Low construction	Part number High construction	Drawing Dimensions in mm
Han A® , Cover for housings, metal, with securing flex		09 20 010 5425	09 20 010 5425	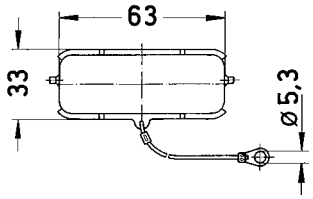

Metal hoods/housings for industrial applications
single locking lever

Identification	Cable entry	Part number Low construction	Part number High construction	Drawing Dimensions in mm
Han A® , Hoods, top entry 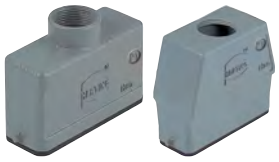	1xM20 1xM25	19 20 016 1440	19 20 016 0446	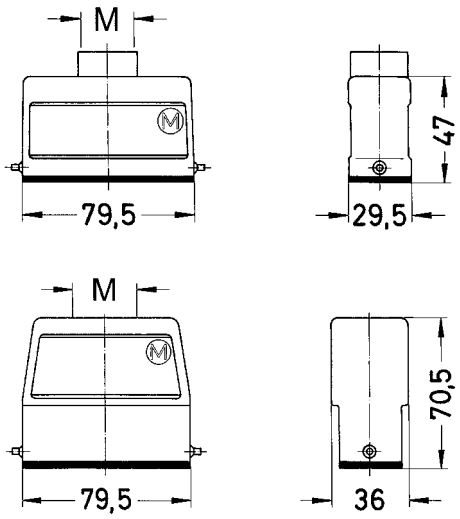
Han A® , Hoods, side entry 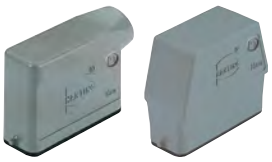	1xM20 1xM25	19 20 016 1540	19 20 016 0546	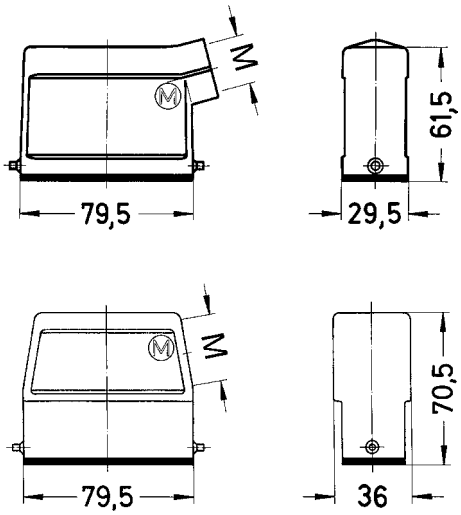
Han A® , Hoods, without cable entry 			09 20 016 0801	

Identification	Cable entry	Part number Low construction	Part number High construction	Drawing Dimensions in mm
Han A® , Protection cover for hoods, metal, Han-Easy Lock®, with securing flex 		09 20 016 5423	09 20 016 5423	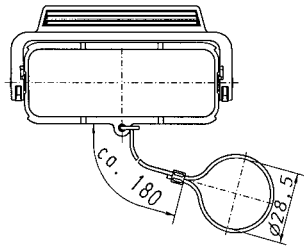
Han A® , Bulkhead mounted housings, Han-Easy Lock®, with thermo-plastic cover 		09 20 016 0321		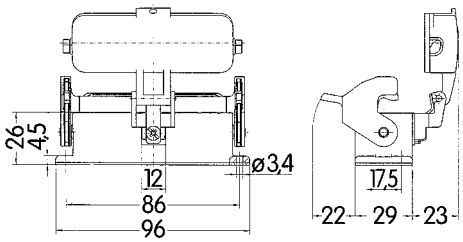
Han A® , Bulkhead mounted housings, Han-Easy Lock® 		09 20 016 0301		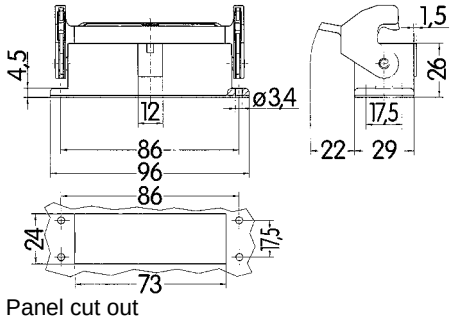 Panel cut out
Han A® , Surface mounted housings, side entry, Han-Easy Lock® 	1xM25 2xM20 2xM25	19 20 016 0251 19 20 016 0290 19 20 016 0291		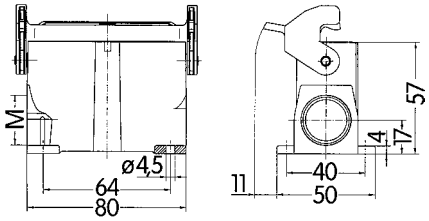
Han A® , Surface mounted housings, side entry, Han-Easy Lock®, with thermo-plastic cover	2xM20	19 20 016 0295		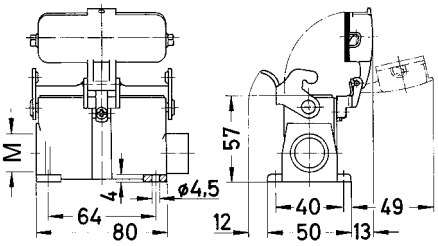

Identification	Cable entry	Part number Low construction	Part number High construction	Drawing Dimensions in mm
Han A® , Cover for housings, metal, with securing flex		09 20 016 5425	09 20 016 5425	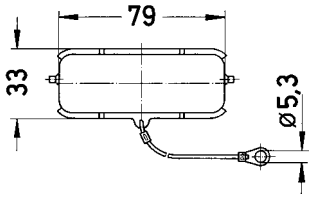

Metal hoods/housings for industrial applications
double locking lever

Identification	Cable entry	Part number Low construction	Part number High construction	Drawing Dimensions in mm
Han A® , Hoods, side entry, Han-Easy Lock®	1xM25 1xM32	19 20 032 1531	19 20 032 0537	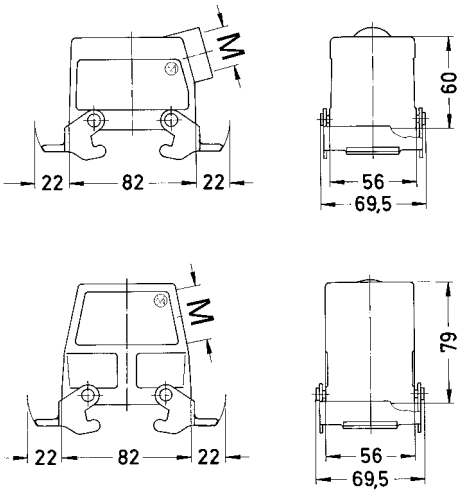
Han A® , Hoods, side entry	1xM25 1xM32	19 20 032 1521	19 20 032 0527	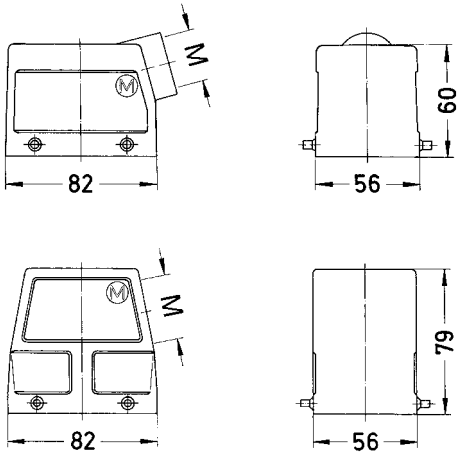
Han A® , Hoods, top entry, Han-Easy Lock®	1xM32		19 20 032 0437	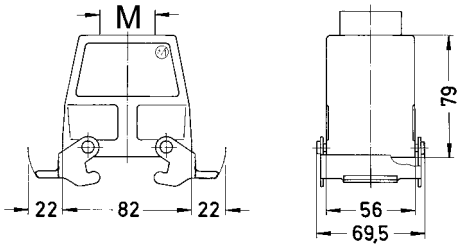

Identification	Cable entry	Part number Low construction	Part number High construction	Drawing Dimensions in mm
Han A® , Hoods, top entry 	1xM25 1xM32		19 20 032 0426 19 20 032 0427	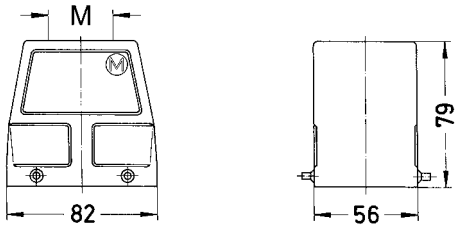
Han A® , Bulkhead mounted housings, Han-Easy Lock® 		09 20 032 0301		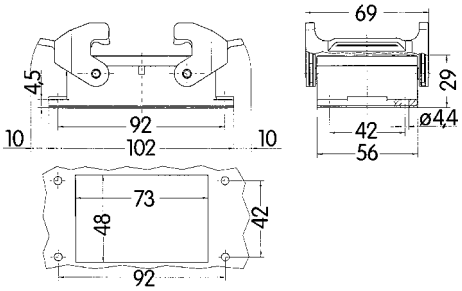 Panel cut out
Han A® , Bulkhead mounted housings, with thermo-plastic cover 		09 20 032 0302		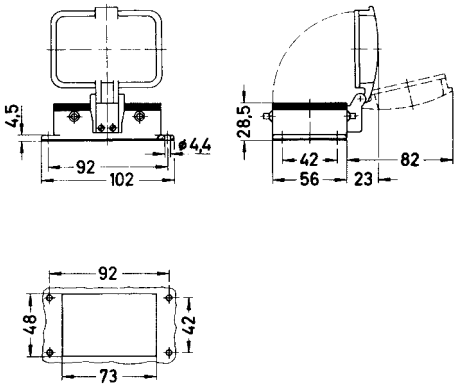 Panel cut out
Han A® , Surface mounted housings, side entry, Han-Easy Lock® 	1xM25 1xM32 2xM32		19 20 032 0231 19 20 032 0232 19 20 032 0272	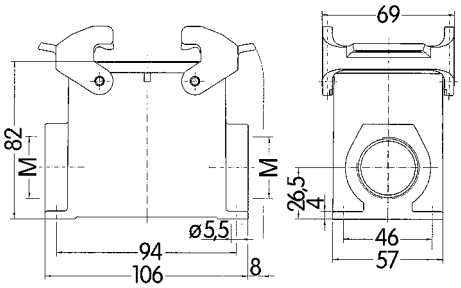

Identification	Cable entry	Part number Low construction	Part number High construction	Drawing Dimensions in mm
Han A® , Surface mounted housings, side entry, with thermo-plastic cover 	1xM25		19 20 032 0226	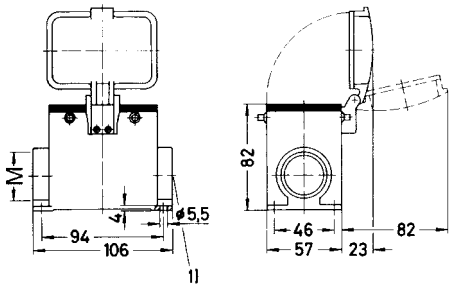 1) Blind way for one cable entry
Han A® , Protection cover for housings, metal 		09 20 032 5405	09 20 032 5405	
Han A® , Protection cover for hoods, metal 		09 20 032 5401	09 20 032 5401	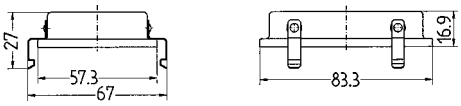

Features

- Metal hoods/housings for industrial applications
- Locking levers: Han-Easy Lock®
- **Field of application:** for excellent mechanical and electrical protection in demanding environments, for example, in the automobile and mechanical engineering industries also for process and regulation control applications
- **Distinguishing feature:** hoods/housings colour-coded grey (RAL 7037)

Technical characteristics

Limiting temperatures	-40 °C ... 125 °C
Flammability (locking lever) acc. to UL 94	V 0
Protection class acc. to UL 50	NEMA type 4/4X/12
Degree of protection acc. to IEC 60529	IP65, IP65 / IP67
Material (hoods/housings)	aluminium, polycarbonate
Surface (hoods/housings)	powder-coated
Colour (hoods/housings)	RAL 7037 (grey)
Material (locking lever)	polycarbonate + stainless steel, stainless steel
Colour (locking lever)	RAL 7037 (grey)
Material (seal)	NBR

Specifications and approvals

single locking lever

Identification	Cable entry	Part number Low construction	Part number High construction	Drawing Dimensions in mm
Han® B, Hoods, top entry	1xM20 1xM25 1xM32	19 30 006 1440	19 30 006 0446 19 30 006 0447	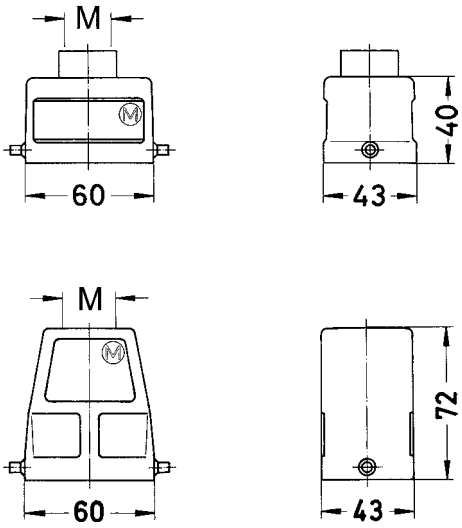
Han® B, Hoods, side entry	1xM20 1xM25 1xM32	19 30 006 1540 19 30 006 1541	19 30 006 0546 19 30 006 0547	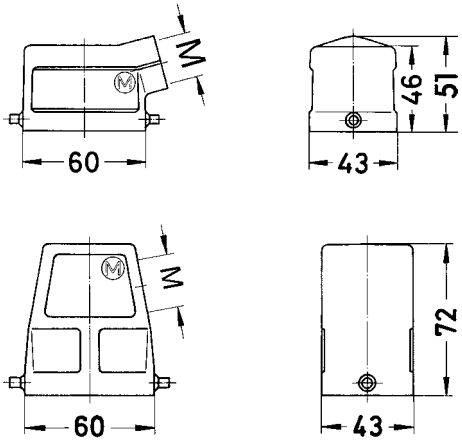
Han® B, Hoods, without cable entry			09 30 006 0801	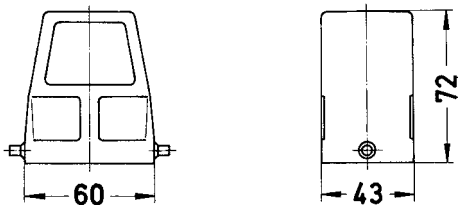

Identification	Cable entry	Part number Low construction	Part number High construction	Drawing Dimensions in mm
Han® B, Protection cover for hoods, metal, Han-Easy Lock®, with securing flex 		09 30 006 5423	09 30 006 5423	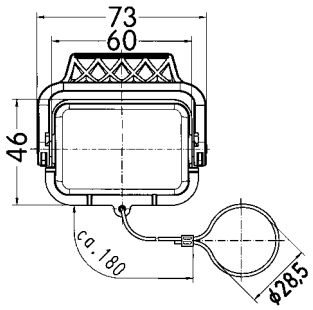
Han® B, Bulkhead mounted housings, Han-Easy Lock®, with thermo-plastic cover 		09 30 006 0302		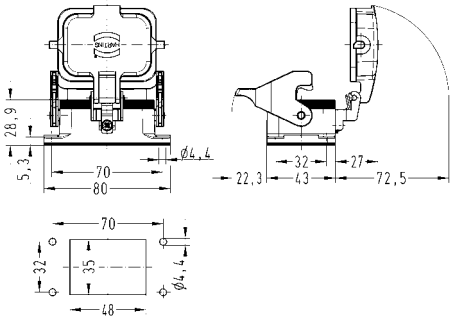 Panel cut out
Han® B, Bulkhead mounted housings, Han-Easy Lock®, with metal cover 		09 30 006 0318		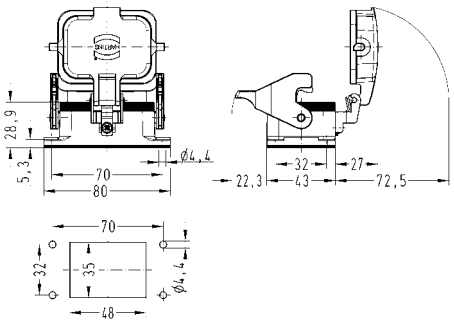 Panel cut out
Han® B, Bulkhead mounted housings, Han-Easy Lock® 		09 30 006 0301		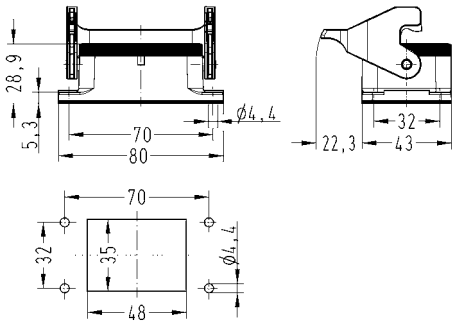 Panel cut out

Identification	Cable entry	Part number Low construction	Part number High construction	Drawing Dimensions in mm
Han® B, Bulkhead mounted housings, Han-Easy Lock®, IP67 		09 30 006 1301		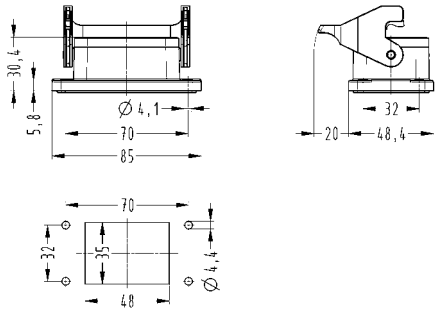
Han® B, Surface mounted housings, side entry, Han-Easy Lock® 	1xM20 2xM20 2xM25 2xM32	19 30 006 1250 19 30 006 1290	19 30 006 0291 19 30 006 0292	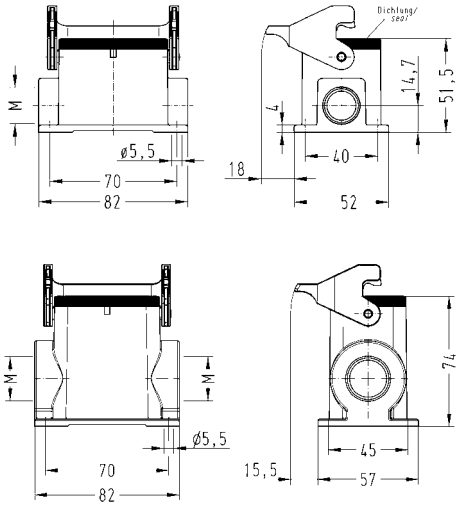
Han® B, Surface mounted housings, side entry, Han-Easy Lock®, with thermo-plastic cover 	1xM20 2xM20 2xM25 2xM32	19 30 006 1255 19 30 006 1295	19 30 006 0296 19 30 006 0297	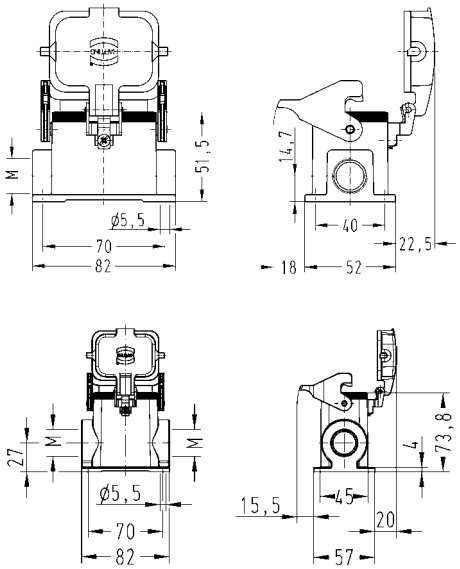

Identification	Cable entry	Part number Low construction	Part number High construction	Drawing Dimensions in mm
Han® B, Surface mounted housings, side entry, Han-Easy Lock®, with metal cover 	1xM20 2xM20 2xM25	19 30 006 2255 19 30 006 2295	19 30 006 7296	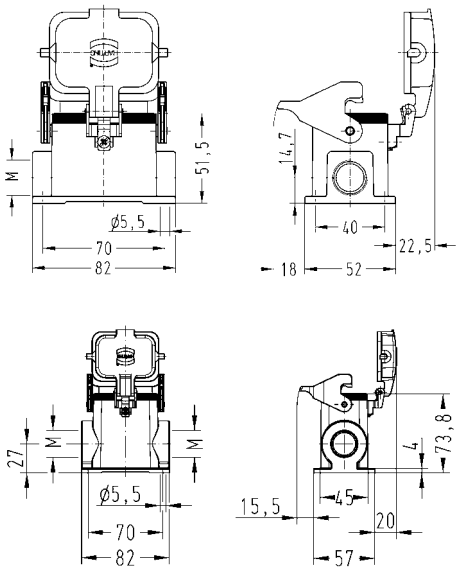
Han® B, Cable to cable housings, top entry 	1xM20	19 30 006 1750		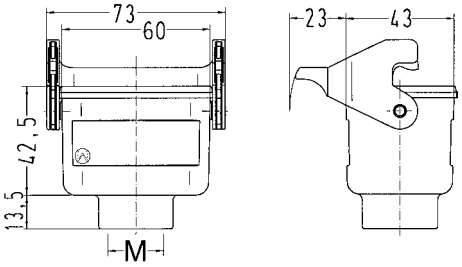
Han® B, Cable to cable housings, top entry, Han-Easy Lock® 	1xM25 1xM32		19 30 006 0756 19 30 006 0757	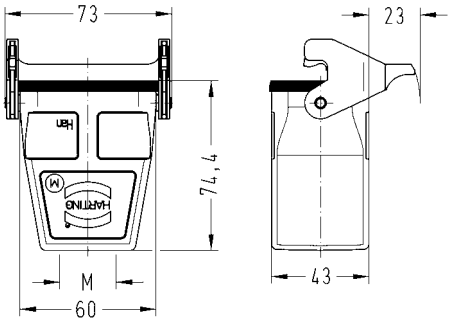
Han® B, Protection cover for cable to cable housings, metal, with securing flex 		09 30 006 5427	09 30 006 5427	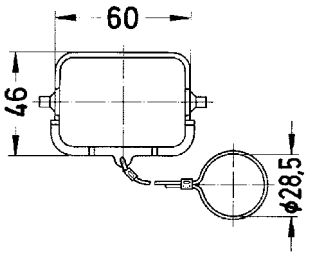

Identification	Cable entry	Part number Low construction	Part number High construction	Drawing Dimensions in mm
Han® B, Flange housings, top entry, Han-Easy Lock® 	1xM25	19 30 006 0716		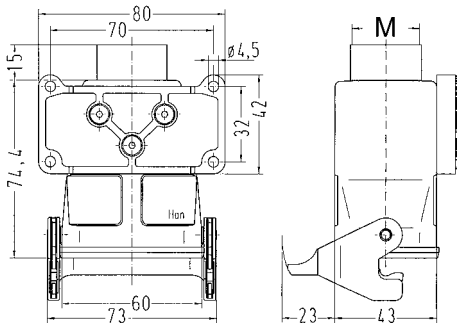
Han® B, Protection cover for housings, plastic 		09 30 006 5404	09 30 006 5404	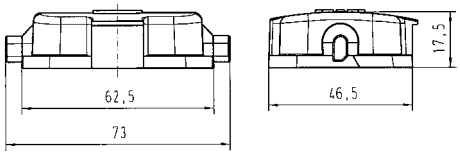
Han® B, Protection cover for housings, metal, with securing flex 		09 30 006 5425	09 30 006 5425	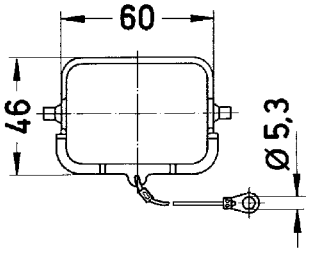
Han® B, Protection cover for hoods, metal, with grounding pins 		09 30 006 5401	09 30 006 5401	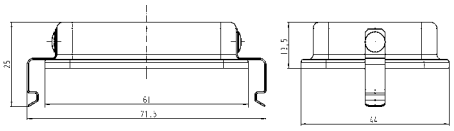

central locking lever

Identification	Cable entry	Part number Low construction	Part number High construction	Drawing Dimensions in mm
Han® B, Hoods, side entry 	1xM25 1xM32		19 30 006 0586 19 30 006 0587	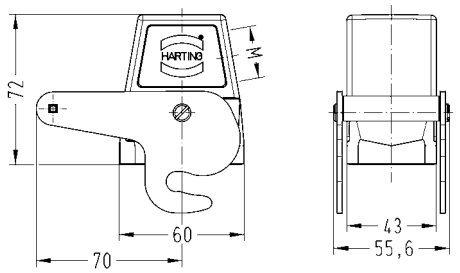
Han® B, Bulkhead mounted housings 		09 30 006 0381		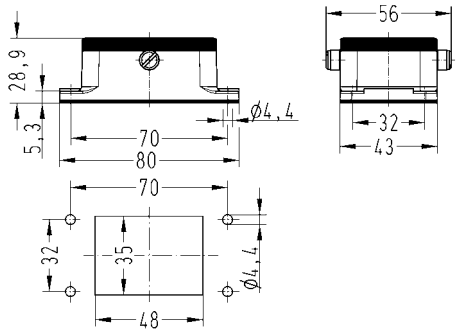 Panel cut out

double locking lever

Identification	Cable entry	Part number Low construction	Part number High construction	Drawing Dimensions in mm
Han® B, Hoods, top entry 	1xM20 1xM25 1xM32 1xM40 2xM20	19 30 010 1420 19 30 010 1421	19 30 010 0427 19 30 010 0428 19 30 010 0465	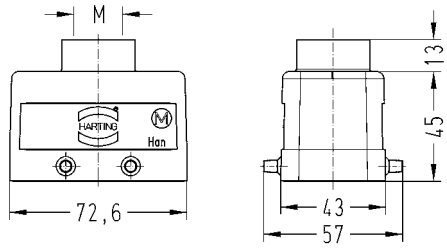 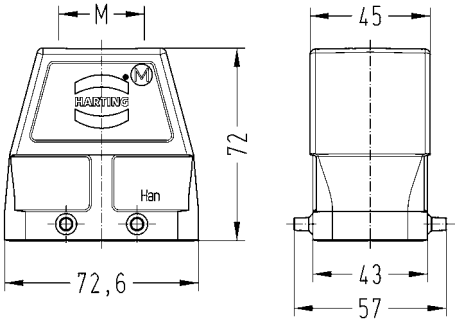
Han® B, Hoods, side entry 	1xM20 1xM25 1xM32	19 30 010 1520 19 30 010 1521	19 30 010 0527	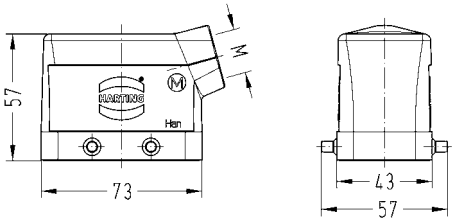 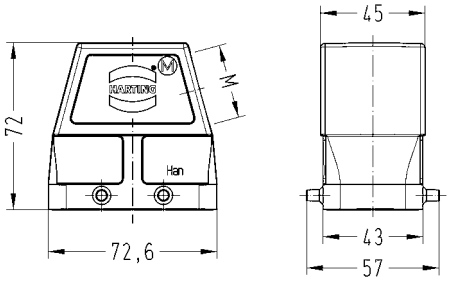

Identification	Cable entry	Part number Low construction	Part number High construction	Drawing Dimensions in mm
Han® B, Hoods, without cable entry 			09 30 010 0801	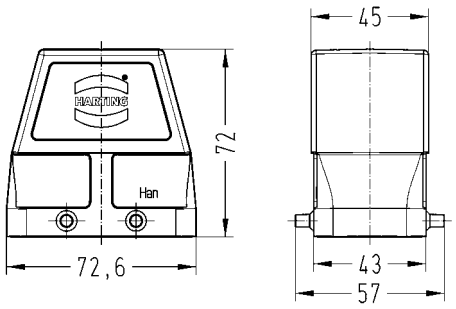
Han® B, Protection cover for hoods, metal, Han-Easy Lock®, with securing flex 		09 30 010 5423	09 30 010 5423	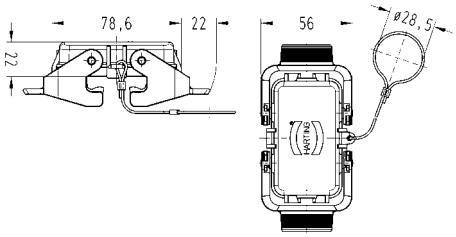
Han® B, Bulkhead mounted housings, Han-Easy Lock® 		09 30 010 0301		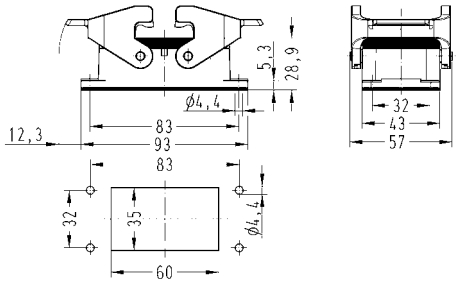 Panel cut out
Han® B, Bulkhead mounted housings, Han-Easy Lock®, IP67 		09 30 010 1301		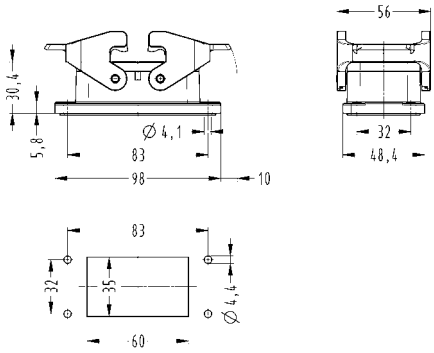

Identification	Cable entry	Part number Low construction	Part number High construction	Drawing Dimensions in mm
Han® B, Surface mounted housings, side entry, Han-Easy Lock® 	1xM20 1xM25 2xM20 2xM25 2xM32	19 30 010 1230 19 30 010 1231 19 30 010 1270	19 30 010 0231 19 30 010 0271 19 30 010 0272	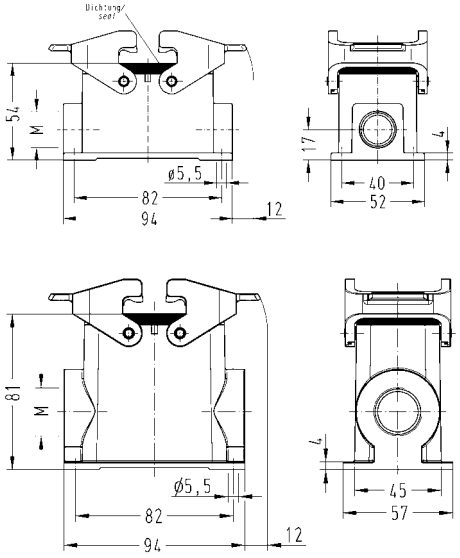
Han® B, Cable to cable housings, top entry, Han-Easy Lock® 	1xM20 1xM25 1xM32	19 30 010 1730	19 30 010 0736 19 30 010 0737	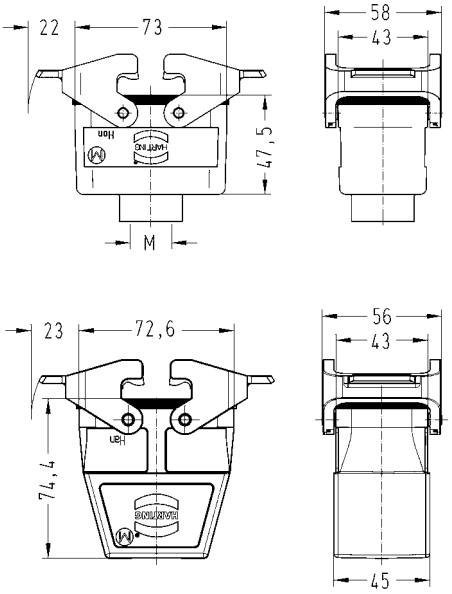
Han® B, Protection cover for cable to cable housings, metal, with securing flex 		09 30 010 5427	09 30 010 5427	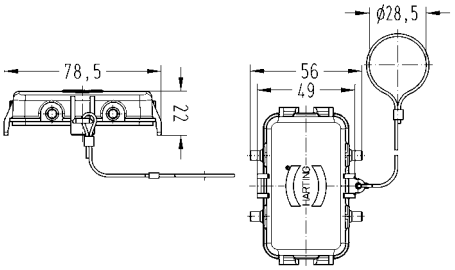
Han® B, Protection cover for housings, plastic 		09 30 010 5407	09 30 010 5407	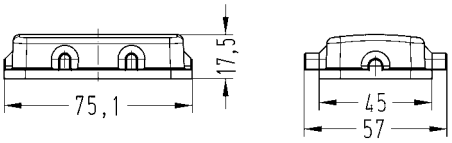

Identification	Cable entry	Part number Low construction	Part number High construction	Drawing Dimensions in mm
Han® B, Protection cover for housings, metal, with securing flex		09 30 010 5425	09 30 010 5425	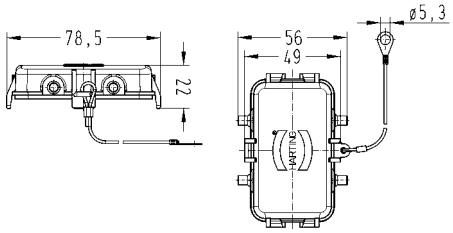
Han® B, Dust protection cover, plastic		09 30 010 5406	09 30 010 5406	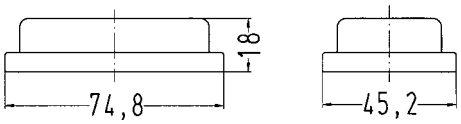
Han® B, Protection cover for hoods, plastic, with grounding pins		09 30 010 5401	09 30 010 5401	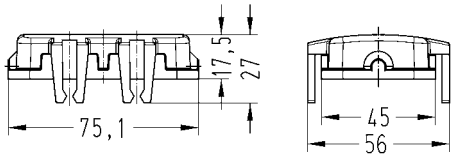

double locking lever

Identification	Cable entry	Part number Low construction	Part number High construction	Drawing Dimensions in mm
Han® B, Hoods, top entry, Han-Easy Lock® 	1xM20 1xM25	19 30 010 1430	19 30 010 0436	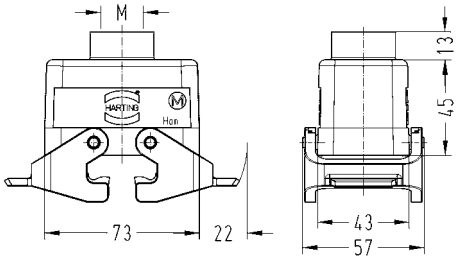 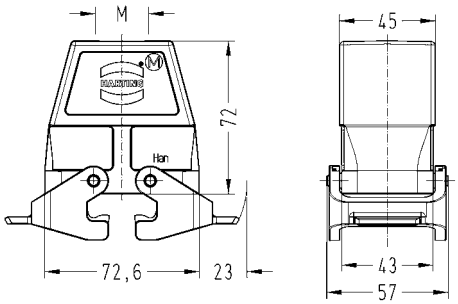
Han® B, Hoods, side entry, Han-Easy Lock® 	1xM20 1xM32	19 30 010 1530	19 30 010 0537	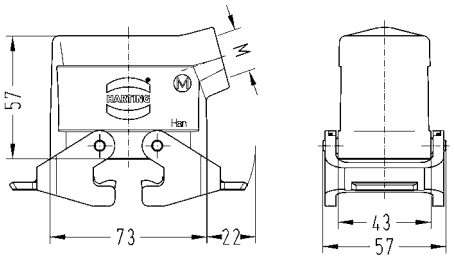 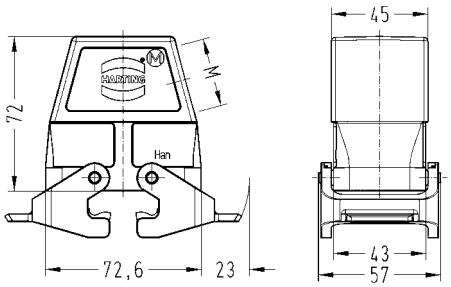

Identification	Cable entry	Part number Low construction	Part number High construction	Drawing Dimensions in mm
Han® B, Protection cover for hoods, metal, with securing flex 		09 30 010 5457	09 30 010 5457	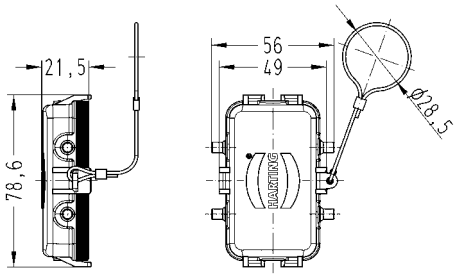
Han® B, Bulkhead mounted housings, with thermo-plastic cover 		09 30 010 0302		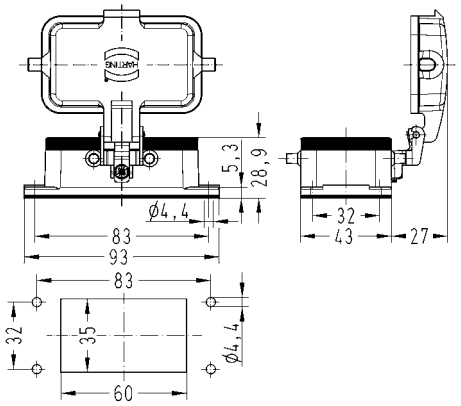 Panel cut out
Han® B, Bulkhead mounted housings, with metal cover 		09 30 010 0317		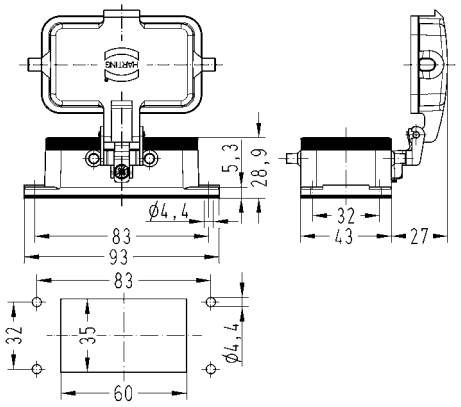 Panel cut out

Identification	Cable entry	Part number Low construction	Part number High construction	Drawing Dimensions in mm
Han® B, Surface mounted housings, side entry, with thermo-plastic cover 	1xM20 2xM20 2xM25	19 30 010 1225 19 30 010 1265	19 30 010 0266	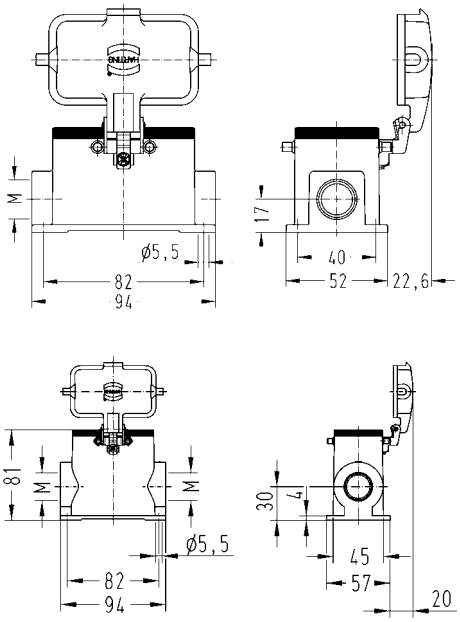

single locking lever

Identification	Cable entry	Part number Low construction	Part number High construction	Drawing Dimensions in mm
Han® B, Hoods, top entry 	1xM20 1xM25 1xM32	19 30 010 1440 19 30 010 1441	19 30 010 0447	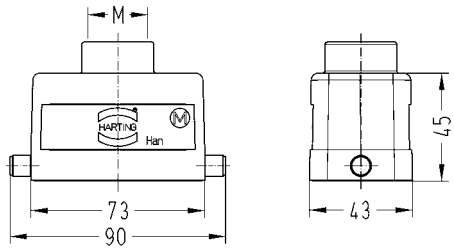 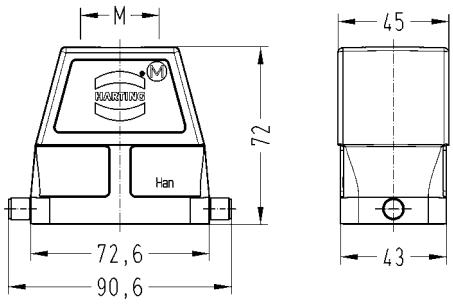
Han® B, Hoods, side entry 	1xM20 1xM25 1xM32	19 30 010 1540 19 30 010 1541	19 30 010 0547	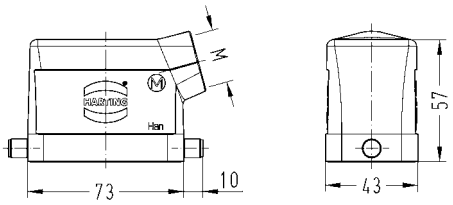 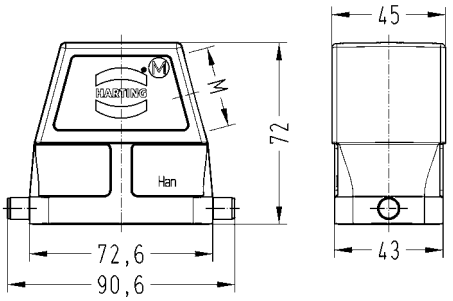

Identification	Cable entry	Part number Low construction	Part number High construction	Drawing Dimensions in mm
Han® B, Hoods, without cable entry 			09 30 010 0803	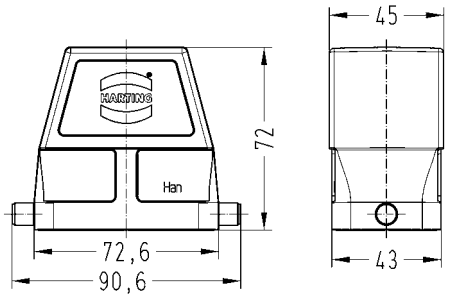
Han® B, Protection cover for hoods, metal, Han-Easy Lock®, with securing flex 		09 30 010 5432	09 30 010 5432	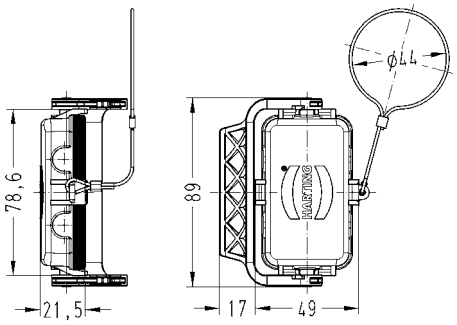
Han® B, Bulkhead mounted housings, Han-Easy Lock® 		09 30 010 0305		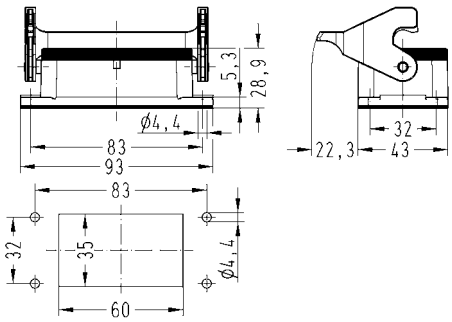 Panel cut out
Han® B, Bulkhead mounted housings, Han-Easy Lock®, with thermo-plastic cover 		09 30 010 0303		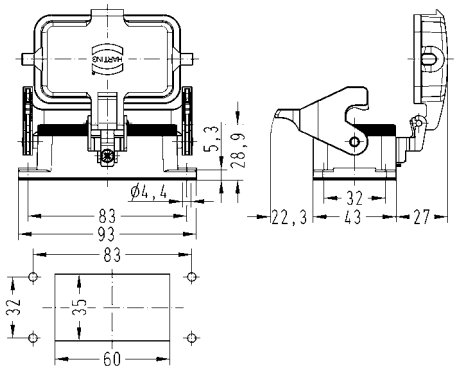 Panel cut out

Identification	Cable entry	Part number Low construction	Part number High construction	Drawing Dimensions in mm
Han® B, Bulkhead mounted housings, Han-Easy Lock®, with metal cover		09 30 010 0318		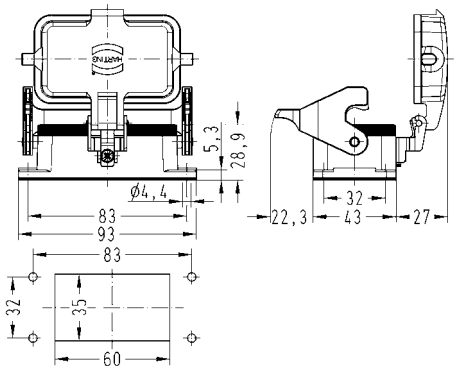 Panel cut out
Han® B, Surface mounted housings, side entry, Han-Easy Lock®	1xM20 2xM20 2xM25 2xM32	19 30 010 1250 19 30 010 1290	19 30 010 0291 19 30 010 0292	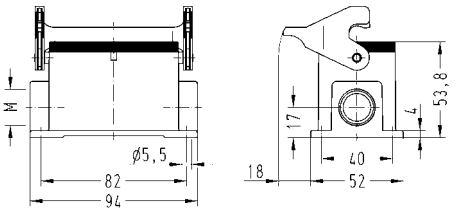 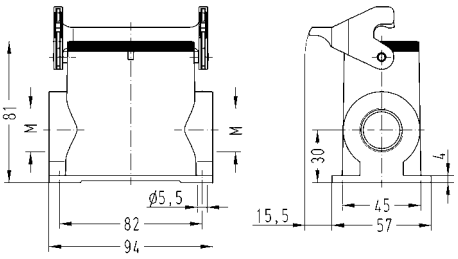
Han® B, Surface mounted housings, side entry, Han-Easy Lock®, with thermo-plastic cover	1xM20 2xM20 2xM25 2xM32	19 30 010 1255 19 30 010 1295	19 30 010 0296 19 30 010 0297	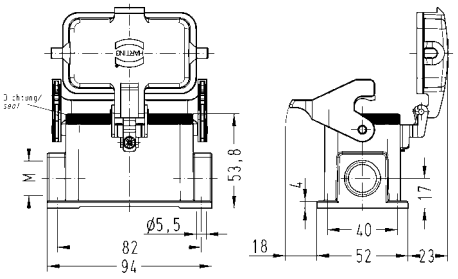 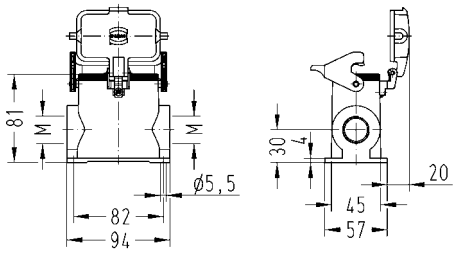

Hoods Housings

Identification	Cable entry	Part number Low construction	Part number High construction	Drawing Dimensions in mm
Han® B, Surface mounted housings, side entry, Han-Easy Lock®, with metal cover 	2xM20 2xM25	19 30 010 2295	19 30 010 7296	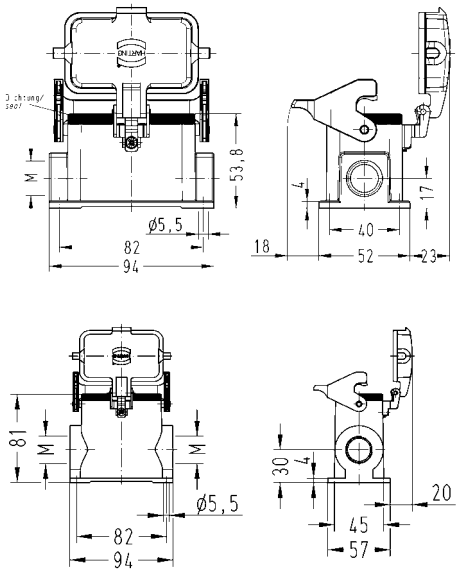
Han® B, Cable to cable housings, top entry, Han-Easy Lock® 	1xM20 1xM25 1xM32	19 30 010 1750	19 30 010 0756 19 30 010 0757	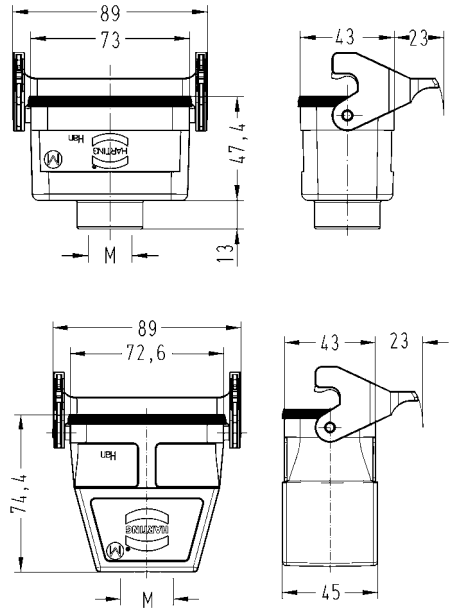
Han® B, Protection cover for housings, plastic, with securing flex 		09 30 010 5412	09 30 010 5412	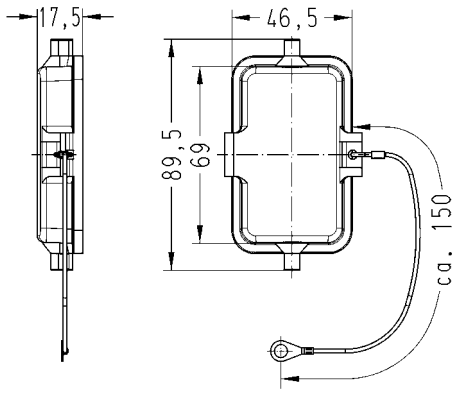

central locking lever

Identification	Cable entry	Part number Low construction	Part number High construction	Drawing Dimensions in mm
Han® B, Hoods, side entry 	1xM25		19 30 010 0586	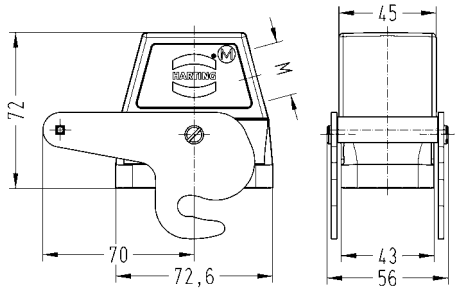
Han® B, Bulkhead mounted housings 		09 30 010 0381		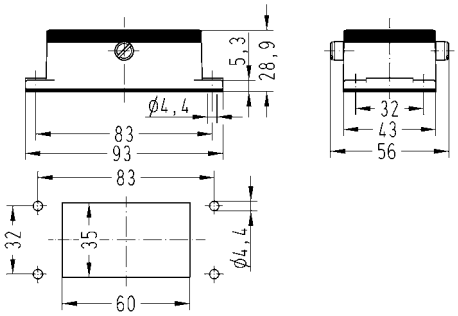 Panel cut out

double locking lever

Identification	Cable entry	Part number Low construction	Part number High construction	Drawing Dimensions in mm
Han® B, Hoods, top entry	1xM25 1xM32 1xM40 2xM25	19 30 016 1421 19 30 016 1422	19 30 016 0427 19 30 016 0428 19 30 016 0466	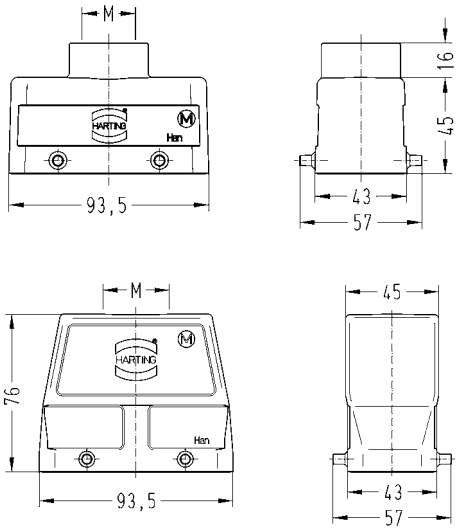
Han® B, Hoods, side entry	1xM25 1xM32 1xM40	19 30 016 1521 19 30 016 1522	19 30 016 0527 19 30 016 0528	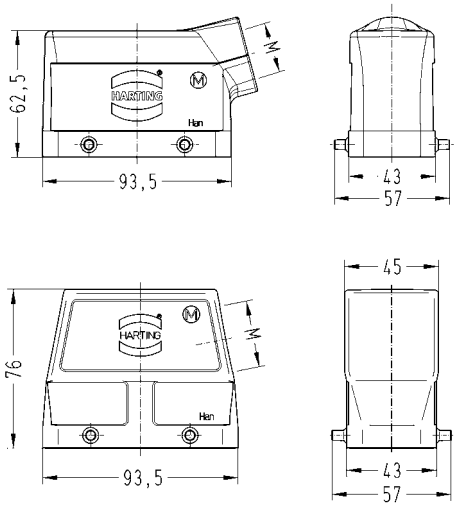
Han® B, Hoods, angled entry	2xM25		19 30 016 0666	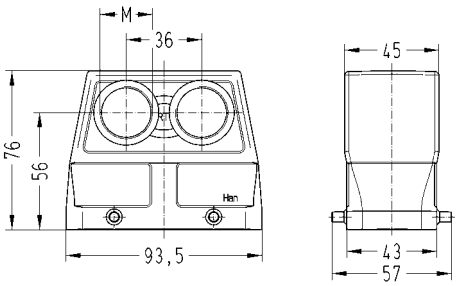

Identification	Cable entry	Part number Low construction	Part number High construction	Drawing Dimensions in mm
Han® B, Hoods, side entry, special type 	1xM40 1xM50		19 30 016 0523 19 30 016 0529	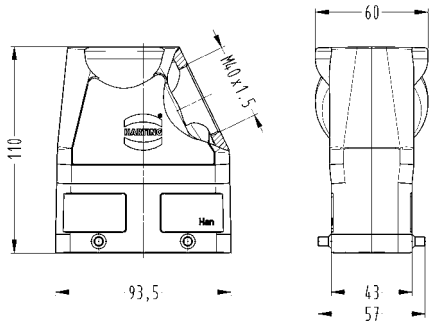 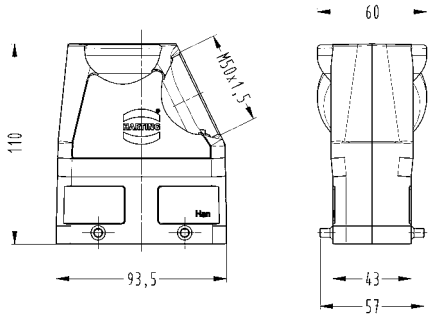
Han® B, Hoods, flat cable entry 			09 30 016 4411	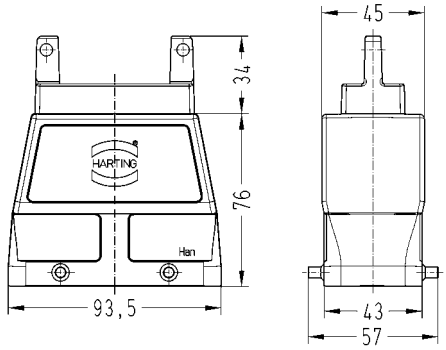
Han® B, Hoods, without cable entry 			09 30 016 0801	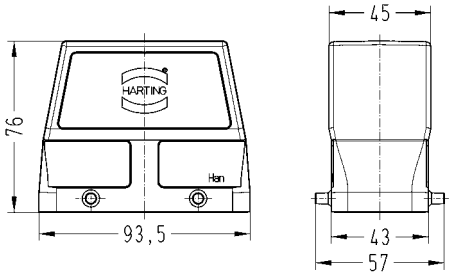

Identification	Cable entry	Part number Low construction	Part number High construction	Drawing Dimensions in mm
Han® B, Protection cover for hoods, metal, Han-Easy Lock®, with securing flex 		09 30 016 5422	09 30 016 5422	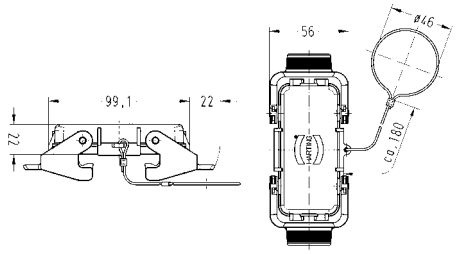
Han® B, Bulkhead mounted housings, Han-Easy Lock® 		09 30 016 0301		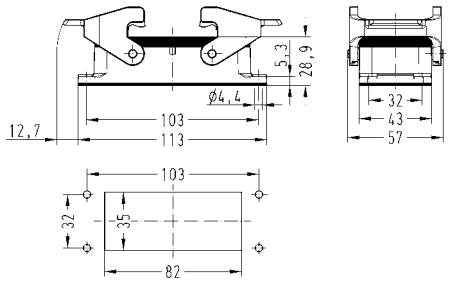 Panel cut out
Han® B, Bulkhead mounted housings, Han-Easy Lock®, IP67 		09 30 016 1301		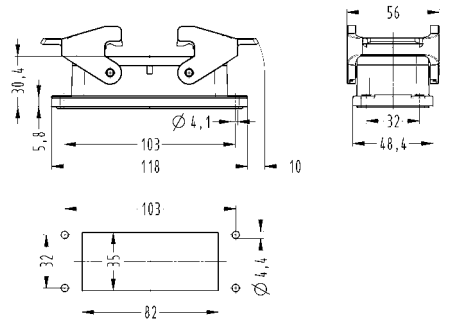
Han® B, Surface mounted housings, side entry, Han-Easy Lock® 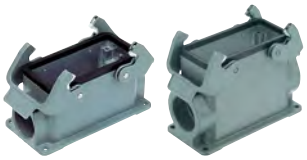	1xM25 1xM32 2xM25 2xM32 2xM40	19 30 016 1231 19 30 016 1271	19 30 016 0232 19 30 016 0271 19 30 016 0272 19 30 016 0273	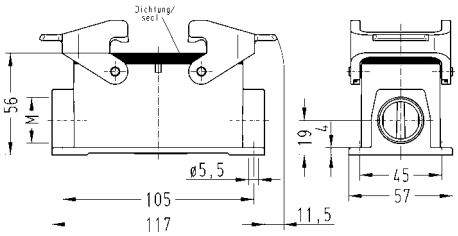 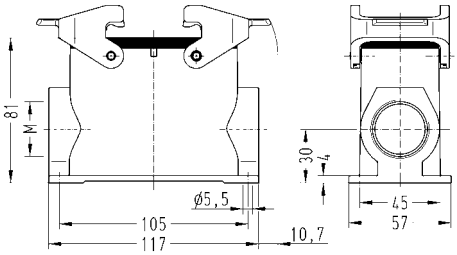

Identification	Cable entry	Part number Low construction	Part number High construction	Drawing Dimensions in mm
Han® B, Cover for housings, plastic 		09 30 016 5405	09 30 016 5405	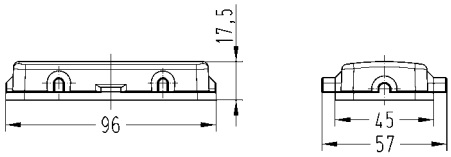
Han® B, Cover for housings, metal, with securing flex 		09 30 016 5425	09 30 016 5425	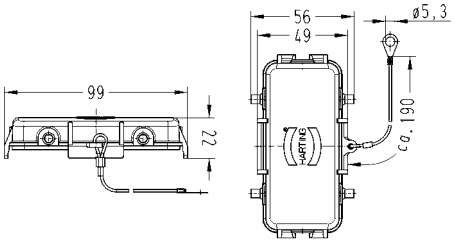
Han® B, Cable to cable housings, top entry, Han-Easy Lock® 	1xM25 1xM32	19 30 016 1731 19 30 016 1732	19 30 016 0736 19 30 016 0737	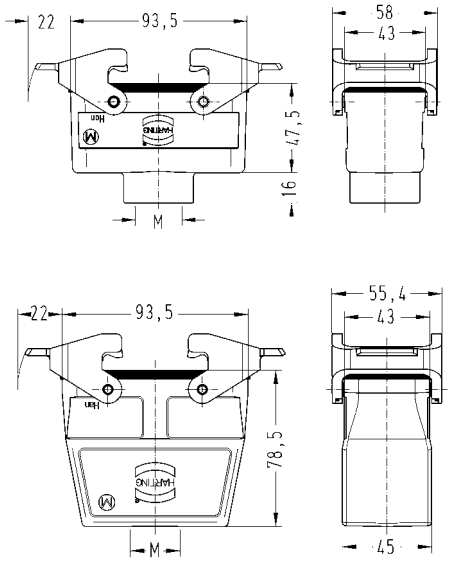
Han® B, Protection cover for cable to cable housings, metal, Han-Easy Lock®, with securing flex 		09 30 016 5426	09 30 016 5426	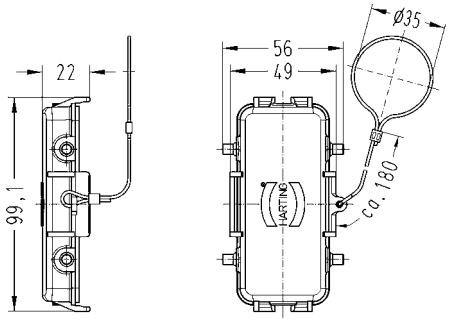
Han® B, Dust protection cover, plastic 		09 30 016 5406	09 30 016 5406	

Identification	Cable entry	Part number Low construction	Part number High construction	Drawing Dimensions in mm
Han® B, Protection cover for hoods, plastic, with grounding pins		09 30 016 5401	09 30 016 5401	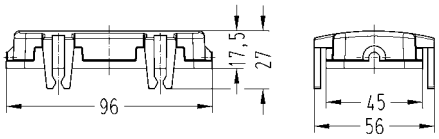

double locking lever

Identification	Cable entry	Part number Low construction	Part number High construction	Drawing Dimensions in mm
Han® B, Hoods, top entry, Han-Easy Lock® 	1xM25 1xM32 1xM40	19 30 016 1431 19 30 016 1432	19 30 016 0437 19 30 016 0438	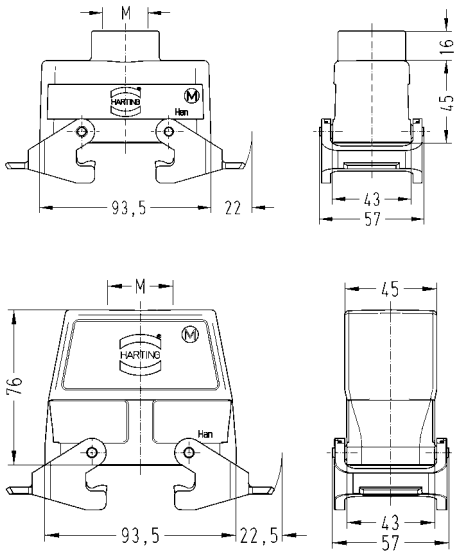
Han® B, Hoods, side entry, Han-Easy Lock® 	1xM25 1xM32 1xM40	19 30 016 1531	19 30 016 0537 19 30 016 0538	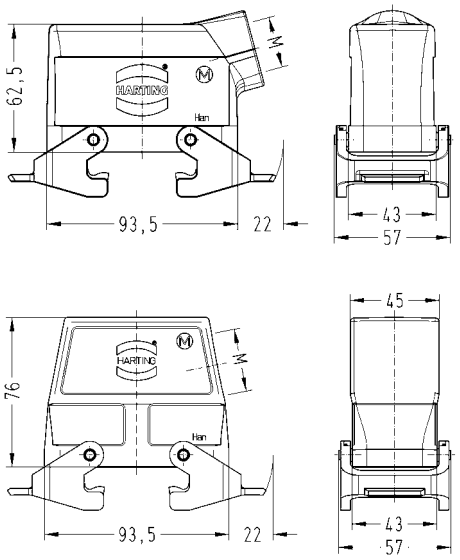

Identification	Cable entry	Part number Low construction	Part number High construction	Drawing Dimensions in mm
Han® B, Hoods, flat cable entry, Han-Easy Lock®			09 30 016 4431	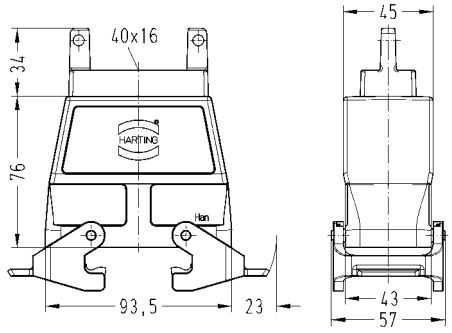
Han® B, Bulkhead mounted housings, with thermo-plastic cover		09 30 016 0302		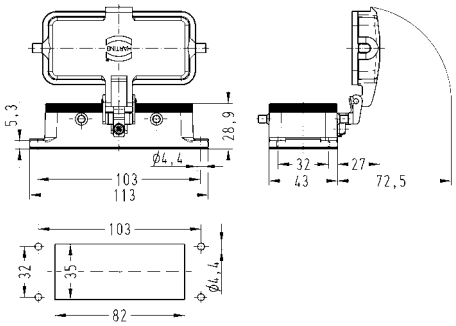 Panel cut out
Han® B, Surface mounted housings, side entry, with thermo-plastic cover	1xM25 2xM25 2xM32	19 30 016 1226 19 30 016 1266	19 30 016 0267	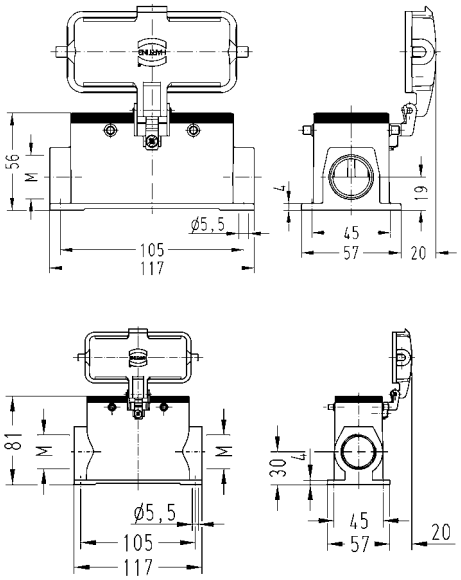

single locking lever

Identification	Cable entry	Part number Low construction	Part number High construction	Drawing Dimensions in mm
Han® B, Hoods, top entry	1xM25 1xM32 1xM40	19 30 016 1441 19 30 016 1442	19 30 016 0447 19 30 016 0448	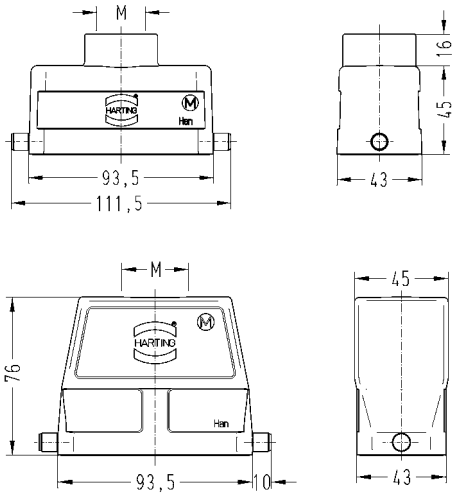
Han® B, Hoods, side entry	1xM25 1xM32 1xM40	19 30 016 1541 19 30 016 1542	19 30 016 0547 19 30 016 0548	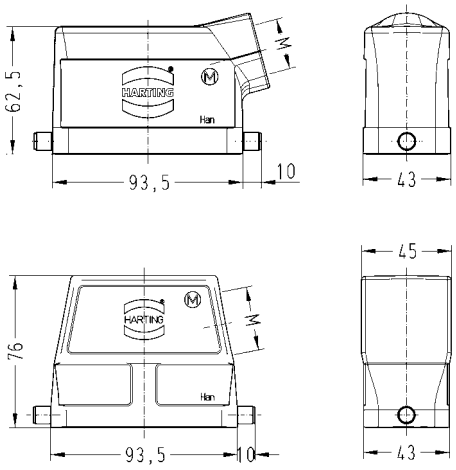
Han® B, Hoods, flat cable entry			09 30 016 4441	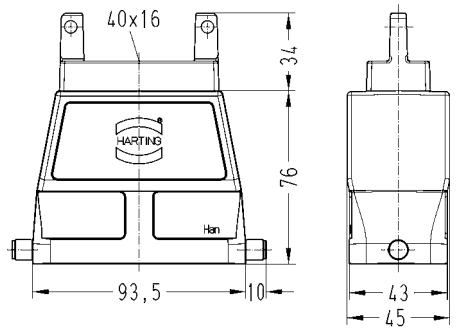

Identification	Cable entry	Part number Low construction	Part number High construction	Drawing Dimensions in mm
Han® B, Hoods, without cable entry 			09 30 016 0803	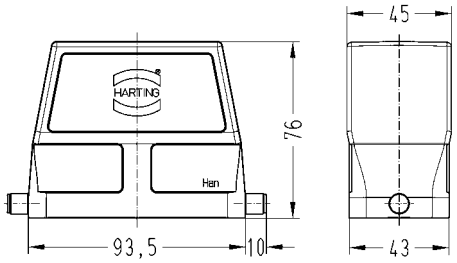
Han® B, Protection cover for hoods, metal, Han-Easy Lock® 		09 30 016 5432	09 30 016 5432	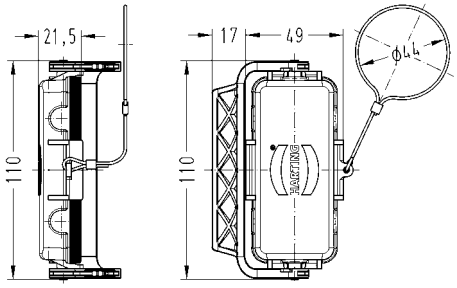
Han® B, Bulkhead mounted housings, Han-Easy Lock® 		09 30 016 0307		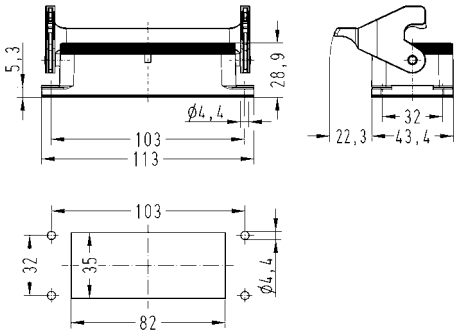 Panel cut out
Han® B, Bulkhead mounted housings, Han-Easy Lock®, with thermo-plastic cover 		09 30 016 0306		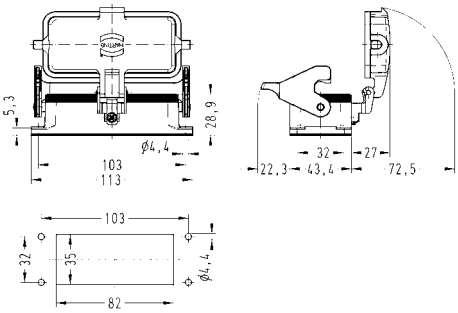 Panel cut out

Identification	Cable entry	Part number Low construction	Part number High construction	Drawing Dimensions in mm
Han® B, Bulkhead mounted housings, Han-Easy Lock®, with metal cover 		09 30 016 0318		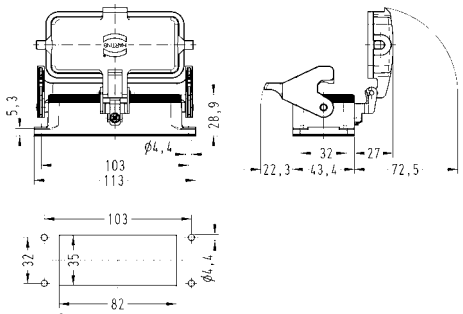 Panel cut out
Han® B, Surface mounted housings, side entry, Han-Easy Lock® 	1xM25 1xM32 2xM25 2xM32	19 30 016 1251 19 30 016 1291	19 30 016 0252 19 30 016 0291 19 30 016 0292	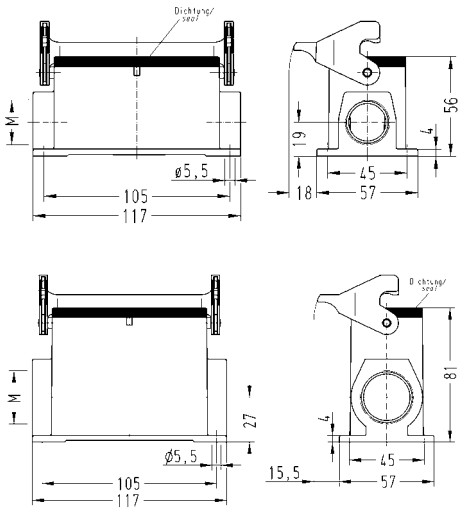
Han® B, Surface mounted housings, side entry, Han-Easy Lock®, with thermo-plastic cover 	1xM25 2xM25 2xM32	19 30 016 1256 19 30 016 1296	19 30 016 0297	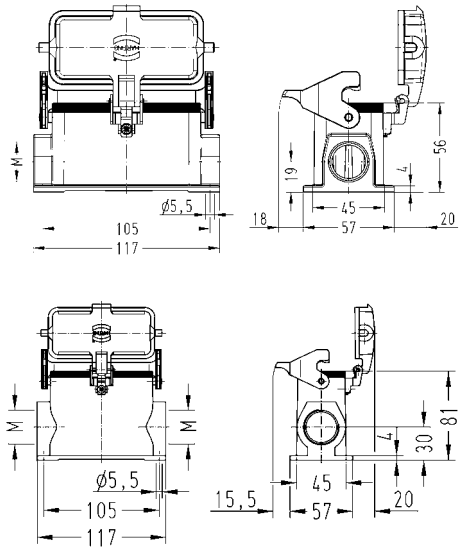

Identification	Cable entry	Part number Low construction	Part number High construction	Drawing Dimensions in mm
Han® B, Surface mounted housings, side entry, Han-Easy Lock®, with metal cover 	2xM25 2xM32	19 30 016 2296	19 30 016 7297	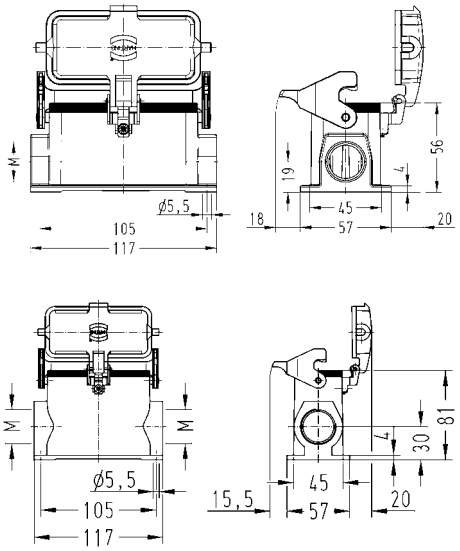
Han® B, Cable to cable housings, top entry, Han-Easy Lock® 	1xM25 1xM32	19 30 016 1751 19 30 016 1752	19 30 016 0757	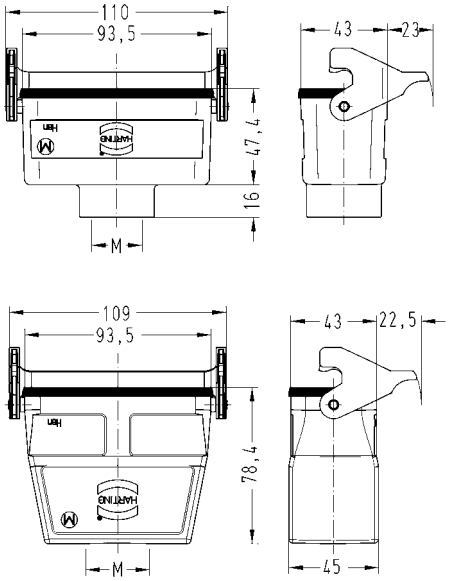

central locking lever

Identification	Cable entry	Part number Low construction	Part number High construction	Drawing Dimensions in mm
Han® B, Hoods, top entry	1xM32		19 30 016 0487	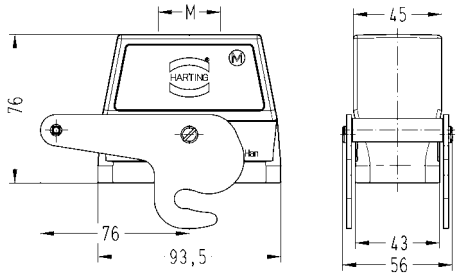
Han® B, Hoods, side entry	1xM25 1xM32		19 30 016 0586 19 30 016 0587	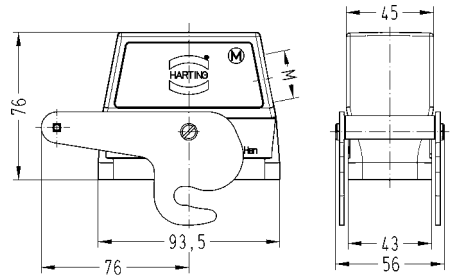
Han® B, Bulkhead mounted housings		09 30 016 0381		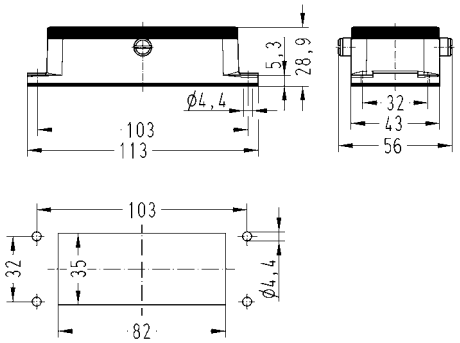 Panel cut out
Han® B, Surface mounted housings, side entry	2xM32		19 30 016 0282	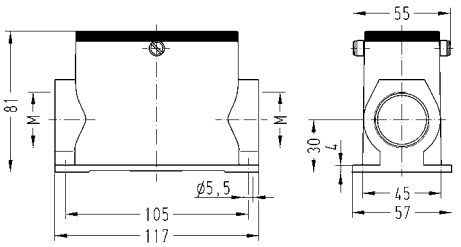

double locking lever

Identification	Cable entry	Part number Low construction	Part number High construction	Drawing Dimensions in mm
Han® B, Hoods, top entry	1xM32 1xM40 2xM32 2xM40	19 30 024 1422	19 30 024 0427 19 30 024 0428 19 30 024 0467 19 30 024 0468	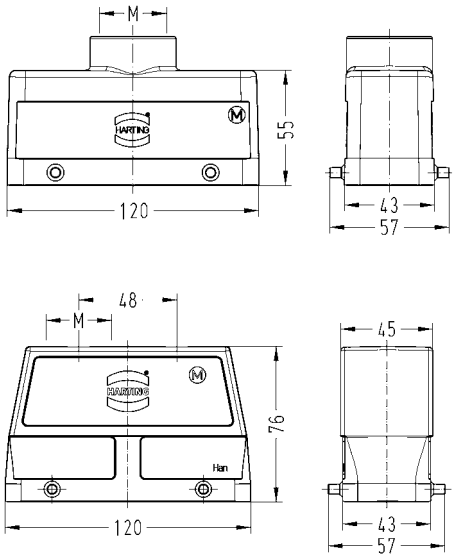
Han® B, Hoods, side entry	1xM25 1xM32 1xM40	19 30 024 1521 19 30 024 1522	19 30 024 0527 19 30 024 0528	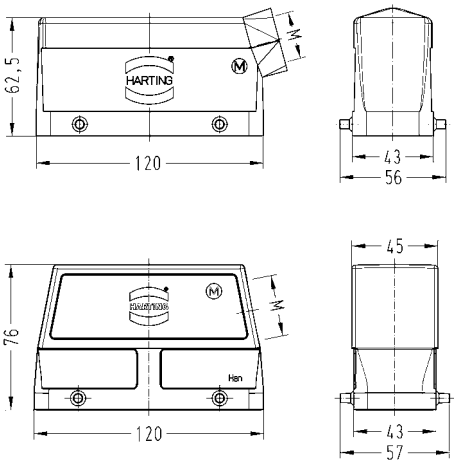
Han® B, Hoods, angled entry	2xM25		19 30 024 0666	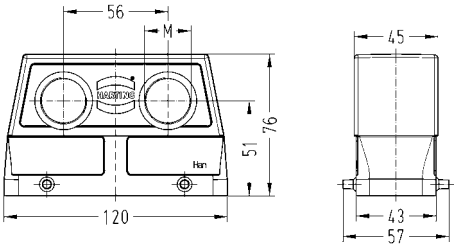

Identification	Cable entry	Part number Low construction	Part number High construction	Drawing Dimensions in mm
Han® B, Hoods, top entry, special type	1xM50		19 30 024 0429	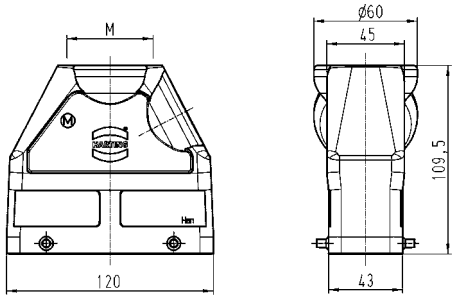
Han® B, Hoods, side entry, special type	1xM40 1xM50		19 30 024 0523 19 30 024 0529	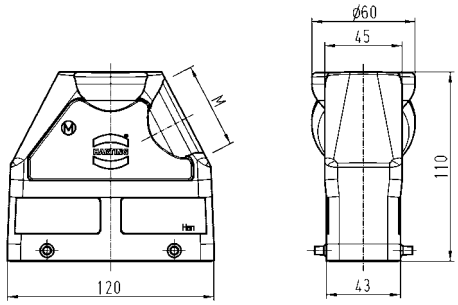
Han® B, Hoods, flat cable entry			09 30 024 4411	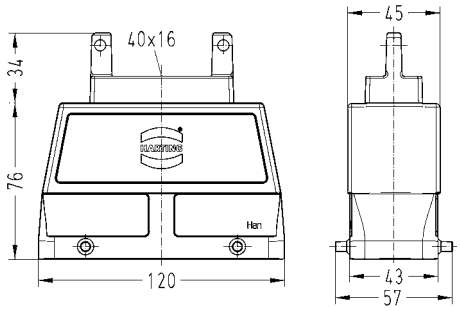
Han® B, Hoods, without cable entry			09 30 024 0801	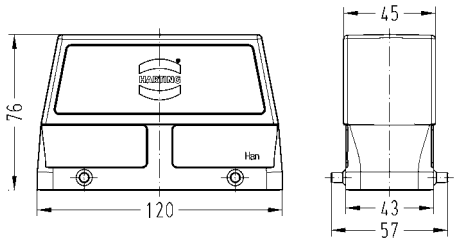
Han® B, Protection cover for hoods, plastic, with grounding pins		09 30 024 5401	09 30 024 5401	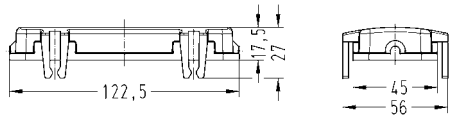

Identification	Cable entry	Part number Low construction	Part number High construction	Drawing Dimensions in mm
Han® B, Protection cover for hoods, metal, with securing flex 		09 30 024 5442	09 30 024 5442	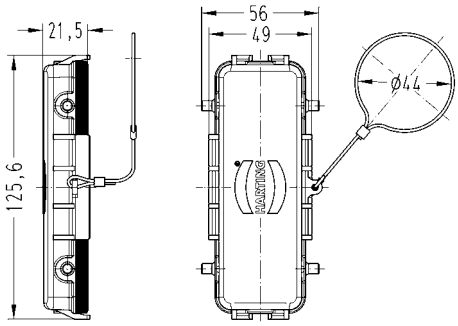
Han® B, Protection cover for hoods, metal, Han-Easy Lock®, with securing flex 		09 30 024 5422	09 30 024 5422	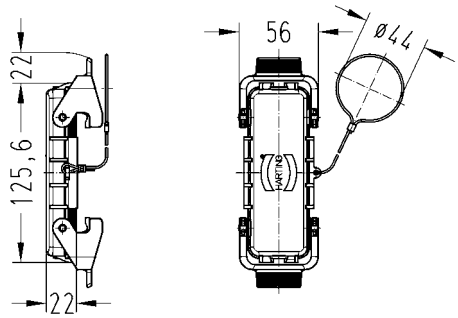
Han® B, Bulkhead mounted housings, Han-Easy Lock® 		09 30 024 0301		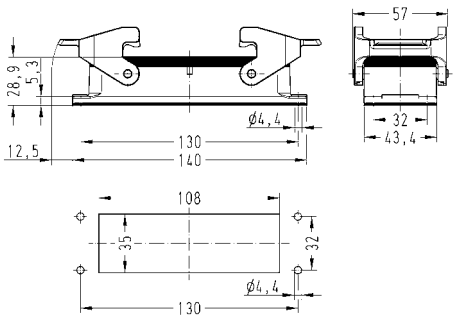 Panel cut out
Han® B, Bulkhead mounted housings, Han-Easy Lock®, IP67 		09 30 024 1301		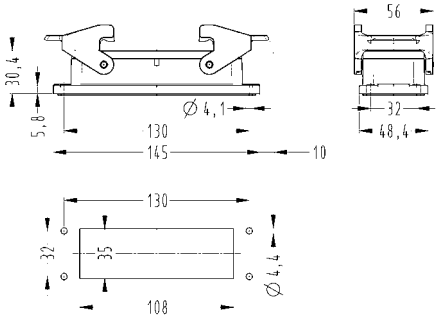

Identification	Cable entry	Part number Low construction	Part number High construction	Drawing Dimensions in mm
Han® B, Surface mounted housings, side entry, Han-Easy Lock® 	1xM25 1xM32 2xM25 2xM32 2xM40	19 30 024 1231 19 30 024 1271	19 30 024 0232 19 30 024 0272 19 30 024 0273	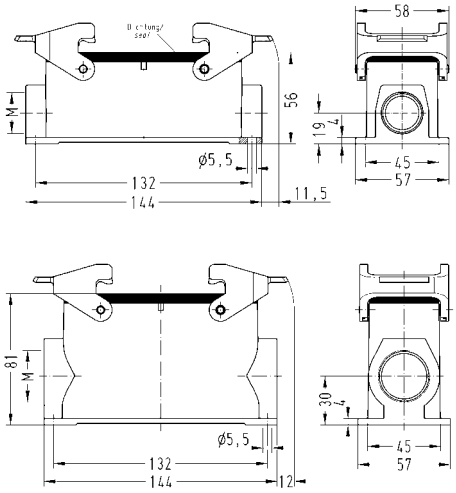
Han® B, Cover for housings, plastic 		09 30 024 5405	09 30 024 5405	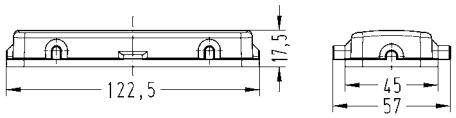
Han® B, Cover for housings, metal, with securing flex 		09 30 024 5425	09 30 024 5425	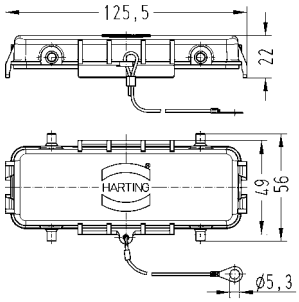
Han® B, Cable to cable housings, top entry, Han-Easy Lock® 	1xM32 1xM40	19 30 024 1732	19 30 024 0737 19 30 024 0738	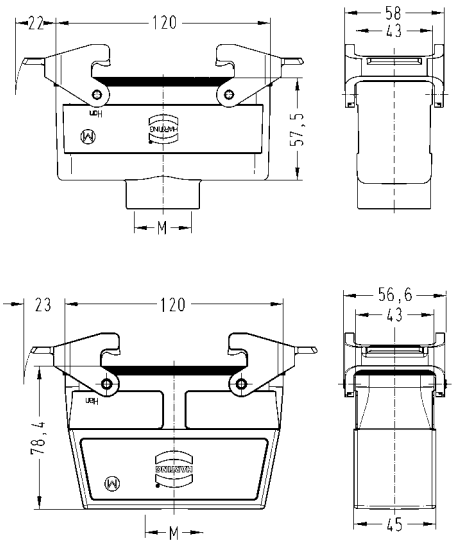

Hoods Housings

Identification	Cable entry	Part number Low construction	Part number High construction	Drawing Dimensions in mm
Han® B, Protection cover for cable to cable housings, metal, with securing flex 		09 30 024 5426	09 30 024 5426	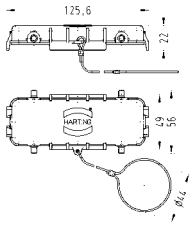
Han® B, Dust protection cover, plastic 		09 30 024 5406	09 30 024 5406	

double locking lever

Identification	Cable entry	Part number Low construction	Part number High construction	Drawing Dimensions in mm
Han® B, Hoods, top entry, Han-Easy Lock® 	1xM32 1xM40	19 30 024 1432	19 30 024 0437 19 30 024 0438	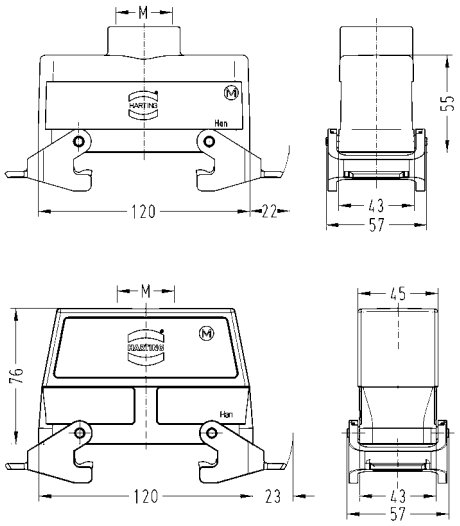
Han® B, Hoods, side entry, Han-Easy Lock® 	1xM25 1xM32 1xM40	19 30 024 1531	19 30 024 0537 19 30 024 0538	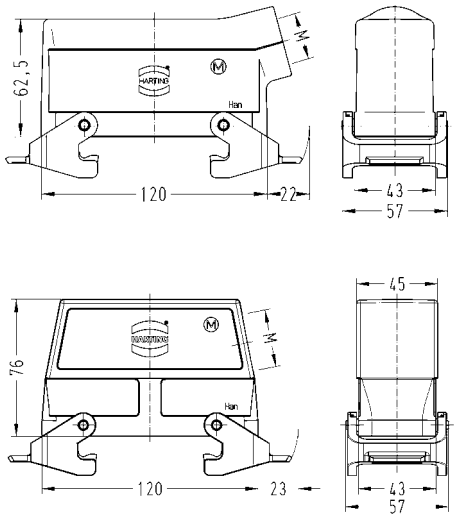

Identification	Cable entry	Part number Low construction	Part number High construction	Drawing Dimensions in mm
Han® B, Bulkhead mounted housings, with thermo-plastic cover 		09 30 024 0302		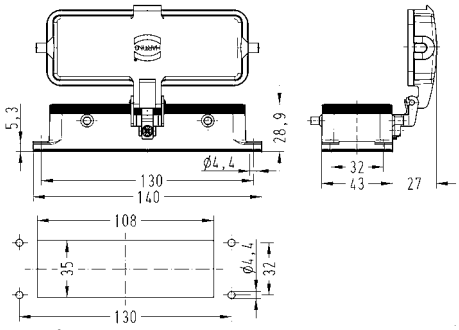 Panel cut out
Han® B, Surface mounted housings, side entry, with thermo-plastic cover 	1xM25 2xM25 2xM32	19 30 024 1226 19 30 024 1266	19 30 024 0267	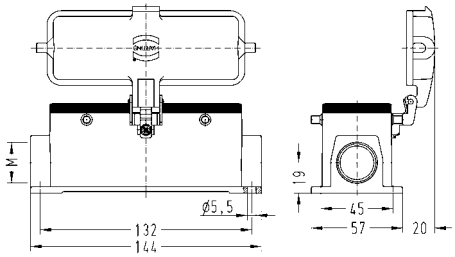 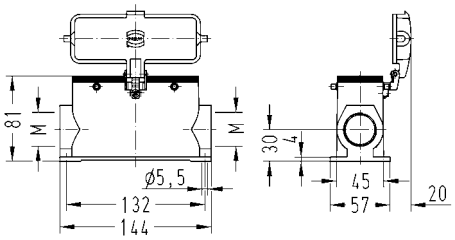

single locking lever

Identification	Cable entry	Part number Low construction	Part number High construction	Drawing Dimensions in mm
Han® B, Hoods, top entry 	1xM32 1xM40	19 30 024 1442	19 30 024 0447 19 30 024 0448	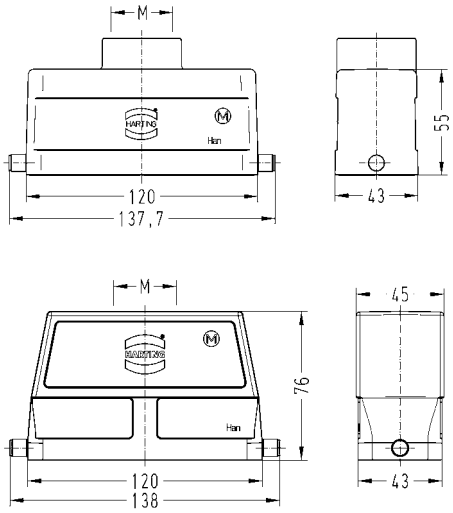
Han® B, Hoods, side entry 	1xM25 1xM32 1xM40	19 30 024 1541 19 30 024 1542	19 30 024 0547 19 30 024 0548	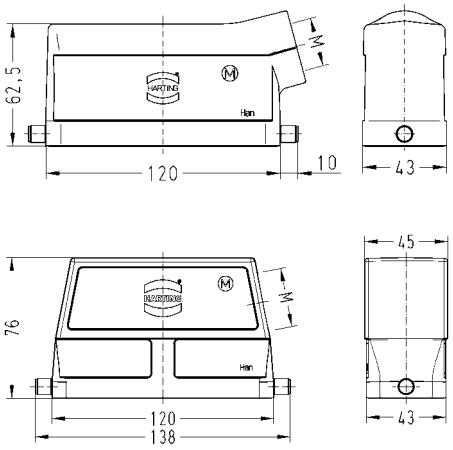
Han® B, Hoods, without cable entry 			09 30 024 0803	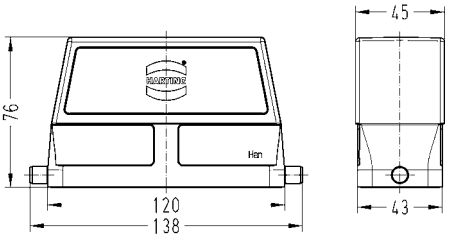

Identification	Cable entry	Part number Low construction	Part number High construction	Drawing Dimensions in mm
Han® B, Protection cover for hoods, metal, Han-Easy Lock®, with securing flex 		09 30 024 5432	09 30 024 5432	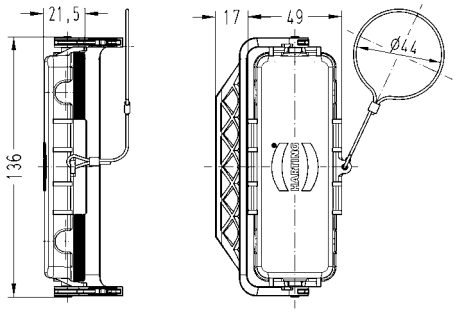
Han® B, Bulkhead mounted housings, Han-Easy Lock® 		09 30 024 0307		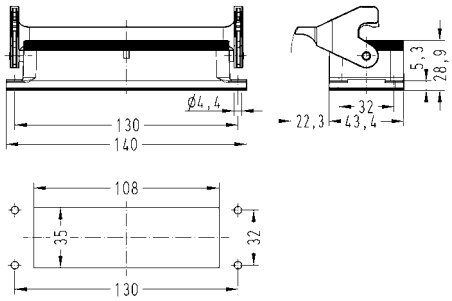 Panel cut out
Han® B, Bulkhead mounted housings, Han-Easy Lock®, with thermo-plastic cover 		09 30 024 0304		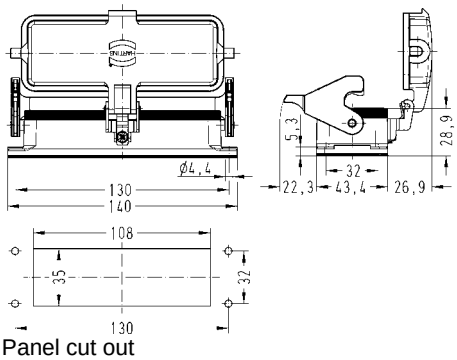 Panel cut out
Han® B, Bulkhead mounted housings, Han-Easy Lock®, with metal cover 		09 30 024 0318		

Identification	Cable entry	Part number Low construction	Part number High construction	Drawing Dimensions in mm
Han® B, Surface mounted housings, side entry, Han-Easy Lock® 	1xM25 2xM25 2xM32	19 30 024 1251 19 30 024 1291	19 30 024 0292	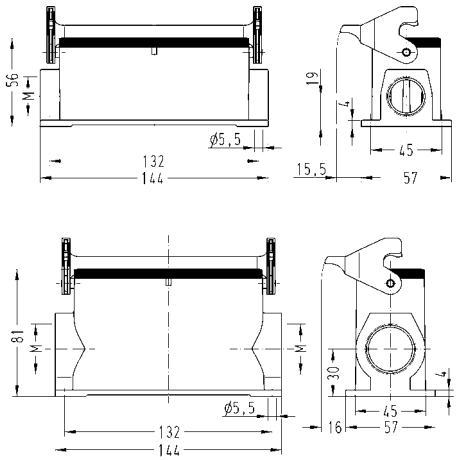
Han® B, Surface mounted housings, side entry, Han-Easy Lock®, with thermo-plastic cover 	1xM25 2xM25 2xM32	19 30 024 1256 19 30 024 1296	19 30 024 0297	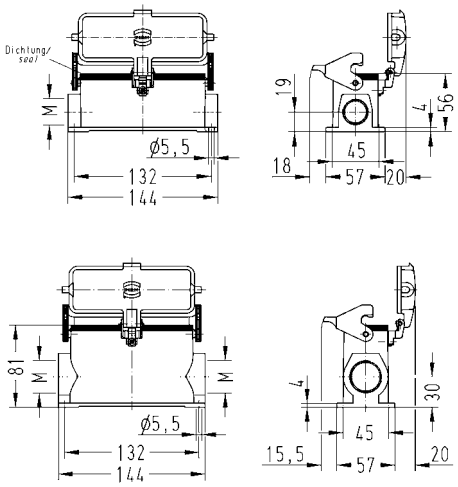
Han® B, Surface mounted housings, side entry, Han-Easy Lock®, with metal cover 	2xM25 2xM32	19 30 024 2296	19 30 024 7297	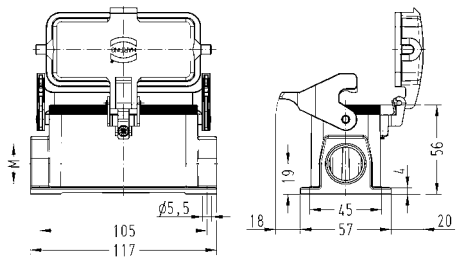
Han® B, Cover for housings, metal 		09 30 024 5436	09 30 024 5436	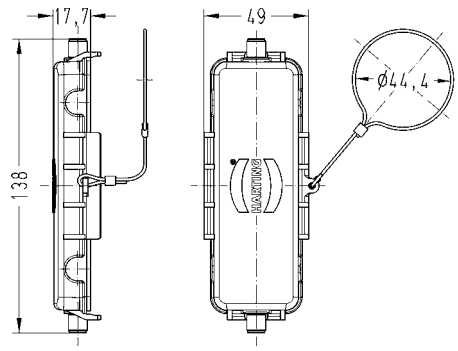

Hoods Housings

Identification	Cable entry	Part number Low construction	Part number High construction	Drawing Dimensions in mm
Han® B, Cable to cable housings, top entry, Han-Easy Lock® 	1xM32	19 30 024 1752	19 30 024 0757	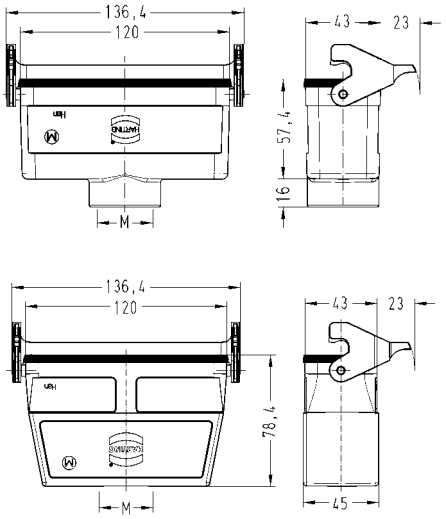

central locking lever

Identification	Cable entry	Part number Low construction	Part number High construction	Drawing Dimensions in mm
Han® B, Hoods, top entry 	1xM32		19 30 024 0487	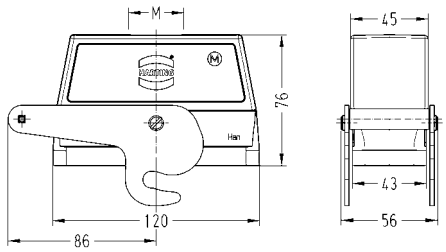
Han® B, Hoods, side entry 	1xM25 1xM32 1xM40		19 30 024 0586 19 30 024 0587 19 30 024 0588	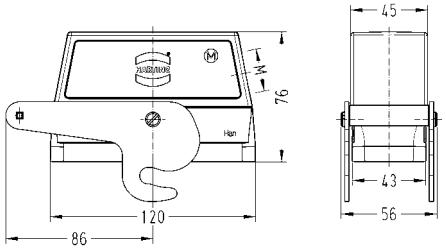
Han® B, Bulkhead mounted housings 		09 30 024 0381		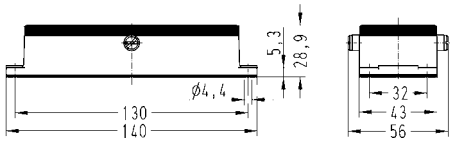 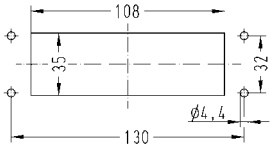 Panel cut out
Han® B, Surface mounted housings, side entry 	2xM32		19 30 024 0282	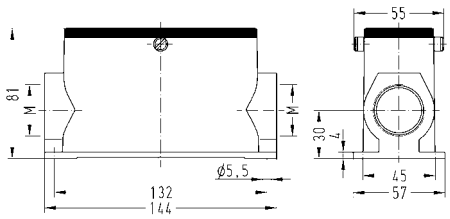

double locking lever

Identification	Cable entry	Part number High construction	Part number Low construction	Drawing Dimensions in mm
Han® B, Hoods, top entry	1xM32 1xM40 1xM50	19 30 032 0427 19 30 032 0428 19 30 032 0429		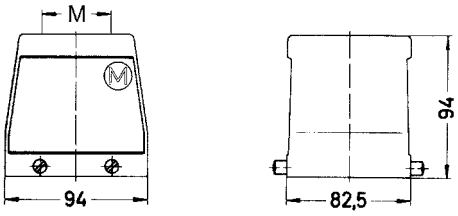
Han® B, Hoods, side entry	1xM32 1xM40 1xM50	19 30 032 0527 19 30 032 0528 19 30 032 0529		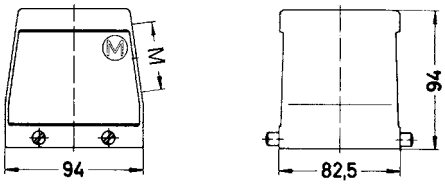
Han® B, Protection cover for hoods, metal, with securing flex		09 30 032 5420	09 30 032 5420	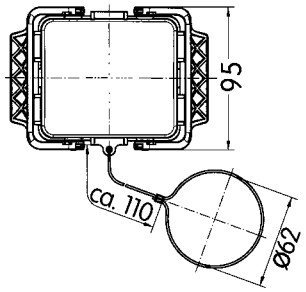
Han® B, Bulkhead mounted housings, Han-Easy Lock®			09 30 032 0301	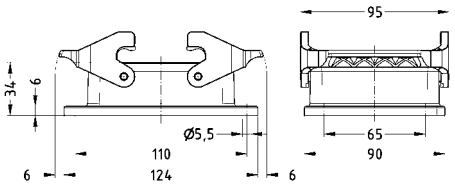 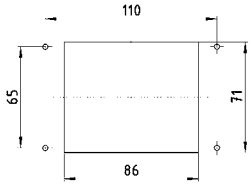 Panel cut out

Identification	Cable entry	Part number High construction	Part number Low construction	Drawing Dimensions in mm
Han® B, Surface mounted housings, side entry, Han-Easy Lock® 	1xM32 2xM32 2xM40	19 30 032 0232 19 30 032 0272 19 30 032 0273		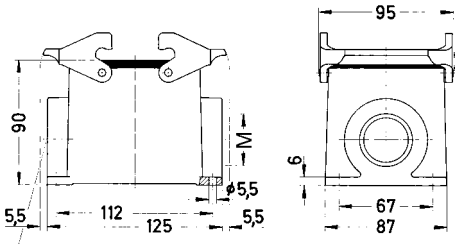
Han® B, Cover for housings, metal, with securing flex 		09 30 032 5425	09 30 032 5425	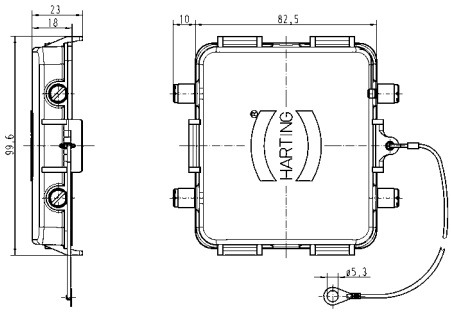
Han® B, Cable to cable housings, top entry, Han-Easy Lock® 	1xM40	19 30 032 0738		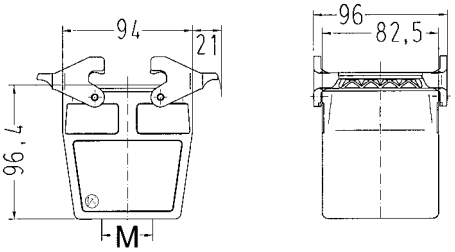
Han® B, Protection cover for cable to cable housings, metal, with securing flex 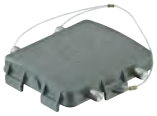		09 30 032 5426 09 30 032 5427	09 30 032 5426 09 30 032 5427	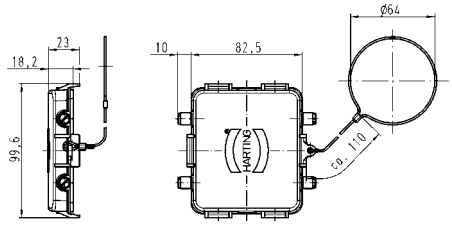

single locking lever

Identification	Cable entry	Part number Low construction	Part number High construction	Drawing Dimensions in mm
Han® B, Hoods, top entry 	1xM40 1xM50 1xM63		19 30 048 0448 19 30 048 0449 19 30 048 0450	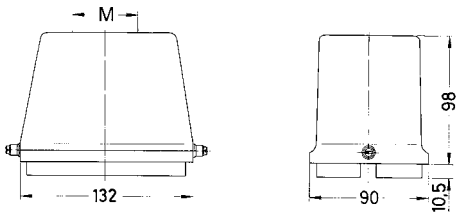
Han® B, Hoods, side entry 	1xM40 1xM50		19 30 048 0548 19 30 048 0549	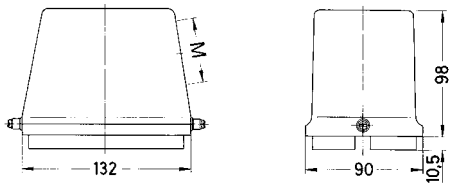
Han® B, Bulkhead mounted housings, with thermo-plastic cover 		09 30 048 0301		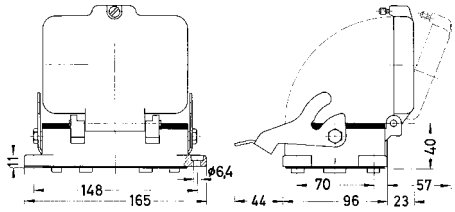 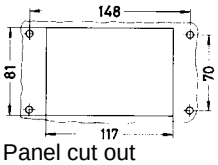 Panel cut out

Identification	Cable entry	Part number Low construction	Part number High construction	Drawing Dimensions in mm
Han® B, Bulkhead mounted housings, with metal cover 		09 30 048 0317		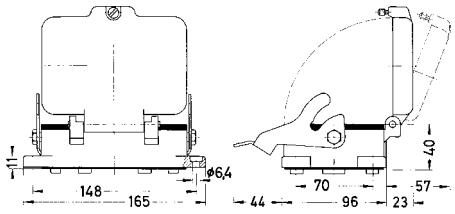 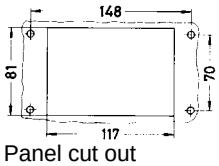 Panel cut out
Han® B, Surface mounted housings, side entry 	2xM32 2xM40		19 30 048 0292 19 30 048 0293	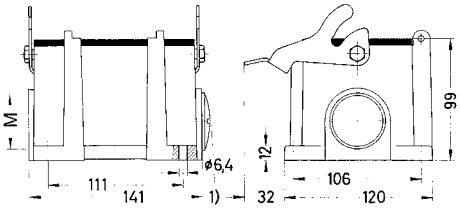
Han® B, Surface mounted housings, side entry, with thermo-plastic cover 	2xM40		19 30 048 0298	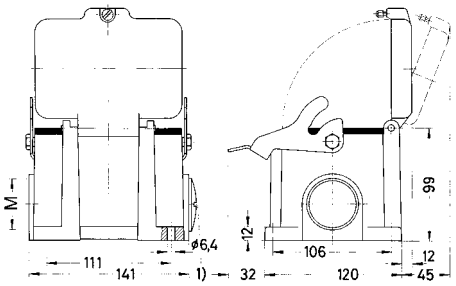

Features

- Metal hoods/housings for industrial applications

Technical characteristics

Limiting temperatures	-40 °C ... 125 °C
Flammability (locking lever) acc. to UL 94	V 0
Protection class acc. to UL 50	NEMA type 4/4X/12
Degree of protection acc. to IEC 60529	IP65 / IP67
Material (hoods/housings)	aluminium
Surface (hoods/housings)	powder-coated
Material (locking lever)	polycarbonate + stainless steel
Colour (locking lever)	RAL 7037 (grey)
Material (seal)	NBR

Specifications and approvals

GL

double locking lever

Identification	Part number	Drawing Dimensions in mm
Han® Easy Hood, Hoods, side entry	11 30 016 0520	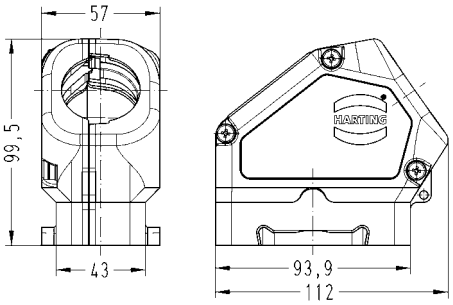

double locking lever

Identification	Part number	Drawing Dimensions in mm
Han® Easy Hood, Hoods, side entry	11 30 024 0520	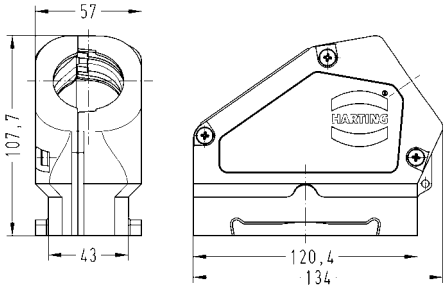

Technical characteristics

Material (accessories) plastic

Technical characteristics

Colour (accessories) black

Identification	Clamping range (mm)	Size	Part number	Drawing Dimensions in mm
Thread adapter		M25 M32	11 30 000 9961 11 30 000 9962	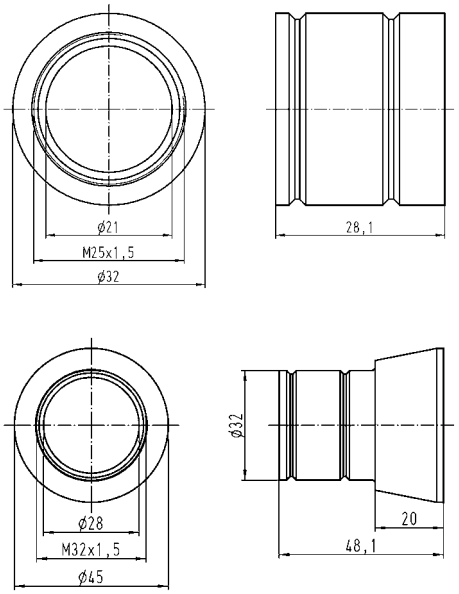
Han® Easy Hood, Cable seal	20 ... 22 23 ... 25 26 ... 28 29 ... 31 32 ... 34		11 30 000 9955 11 30 000 9956 11 30 000 9957 11 30 000 9958 11 30 000 9959	

Features

- Angled housing replaces the terminal box
- Compact design saves space
- The position of the terminal housing can be switched by 90°
- Compatible with standard hoods for single lever size 10 B
- Locking levers: Han-Easy Lock®
- Star and delta circuits can be realized in the female connector Han® ESS
- Suitable for standard inserts

Technical characteristics

Limiting temperatures	-40 °C ... 125 °C
Flammability (locking lever) acc. to UL 94	V 0
Protection class acc. to UL 50	NEMA type 4/4X/12
Degree of protection acc. to IEC 60529	IP65
Material (hoods/housings)	aluminium
Surface (hoods/housings)	unpainted, powder-coated
Colour (hoods/housings)	unpainted, RAL 7037 (grey)
Material (locking lever)	polycarbonate + stainless steel
Colour (locking lever)	RAL 7037 (grey)
Material (seal)	NBR

Specifications and approvals

single locking lever

Identification	Part number	Drawing Dimensions in mm
Han-Drive®, Housings for motor termination, unpainted, Han-Easy Lock®	09 30 410 0901 09 30 410 0909 09 30 410 0921	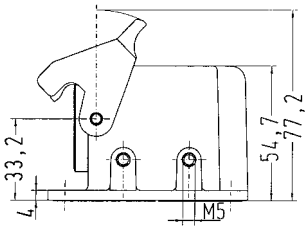
Han-Drive®, Housings for motor termination, unpainted, with protection cover, Han-Easy Lock®	09 30 410 0951 09 30 410 0960 09 30 410 0970 09 30 410 0971 09 30 410 0974 09 30 410 0983	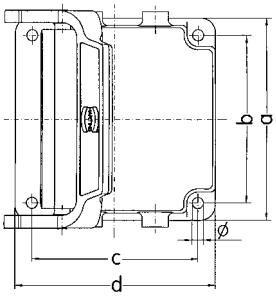
Han-Drive®, Housings for motor termination, powder-coated RAL 7037, Han-Easy Lock®	09 30 010 0901 09 30 010 0902	
Han-Drive®, Housings for motor termination, powder-coated RAL 7037, with protection cover, Han-Easy Lock®	09 30 010 0961	

	a	b	c	d	Ø
09 30 010 0901	82	68	68	82	4.5
09 30 010 0902	98			98	
09 30 010 0961	82	70	70	82	
09 30 410 0901	82	68	68	82	4.5
09 30 410 0909	98			98	
09 30 410 0921	85	73	73	85	
09 30 410 0951	82	68	68	82	4.5
09 30 410 0960	98	70	70	98	4.3
09 30 410 0970	92	77	77	92	4.3
09 30 410 0971	85	73	73	85	5.5
09 30 410 0974	92	70	70	92	4.3
09 30 410 0983	92	80	80	92	5.1
09 62 810 0901	82	68	68	82	4.5
09 62 810 0974	92	70	70	92	4.1

Identification	Part number Low construction	Part number High construction	Drawing Dimensions in mm
Han® B, Dust protection cover, plastic	09 30 010 5406	09 30 010 5406	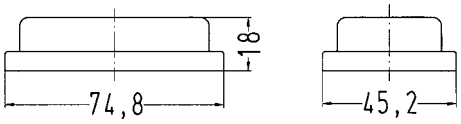
Han-Drive®, EMC housings, Han-Easy Lock®	09 62 810 0901		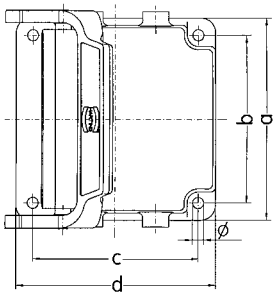
Han-Drive®, EMC housings, Han-Easy Lock®, with cover	09 62 810 0974		

	a	b	c	d	Ø
09 30 010 0901	82	68	68	82	4.5
09 30 010 0902	98			98	
09 30 010 0961	82	70	70	82	
09 30 410 0901	82	68	68	82	4.5
09 30 410 0909	98			98	
09 30 410 0921	85	73	73	85	
09 30 410 0951	82	68	68	82	4.5
09 30 410 0960	98	70	70	98	4.3
09 30 410 0970	92	77	77	92	4.3
09 30 410 0971	85	73	73	85	5.5
09 30 410 0974	92	70	70	92	4.3
09 30 410 0983	92	80	80	92	5.1
09 62 810 0901	82	68	68	82	4.5
09 62 810 0974	92	70	70	92	4.1

Features

- Hoods/Housings for higher environmental requirements

Technical characteristics

Limiting temperatures	-40 °C ... 125 °C
Protection class acc. to UL 50	NEMA type 4/4X/12
Degree of protection acc. to IEC 60529	IP65 / IP67
Corrosion resistance	ASTM B117-09 (500 h)
Material (hoods/housings)	zinc die-cast
Surface (hoods/housings)	powder-coated
Colour (hoods/housings)	RAL 9005 (black)
Material (locking lever)	stainless steel
Material (seal)	FPM

Specifications and approvals

Hoods/Housings for higher environmental requirements
double locking lever

Identification	Cable entry	Part number	Drawing Dimensions in mm
Han® M, Hoods, top entry	1xM20	19 37 003 1440	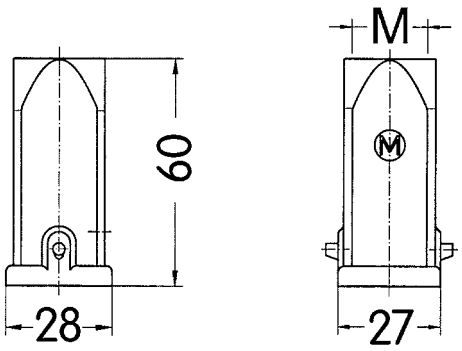
Han® M, Hoods, side entry	1xM20	19 37 003 1640	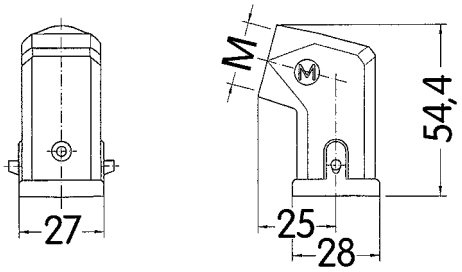
Han® M, Protection cover for hoods, metal, for female inserts, with securing flex		09 37 003 5401	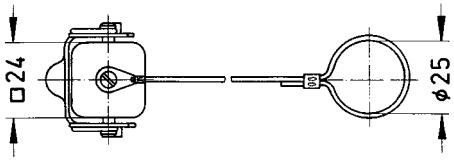
Han® M, Protection cover for hoods, metal, for male inserts, with securing flex		09 37 003 5402	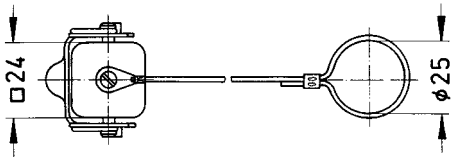

Identification	Cable entry	Part number	Drawing Dimensions in mm
Han® M, Bulkhead mounted housings, straight 		09 37 003 0301	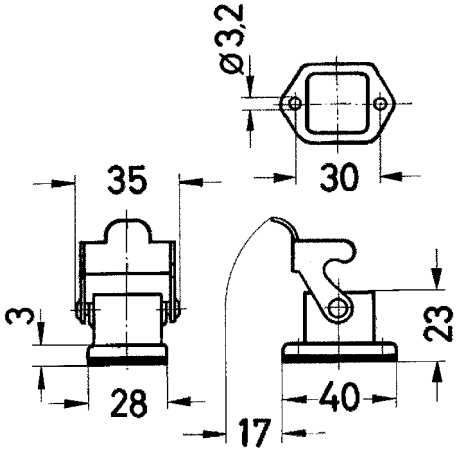 Panel cut out 22 x 22 mm
Han® M, Bulkhead mounted housings, straight, with cover 		09 37 003 0305	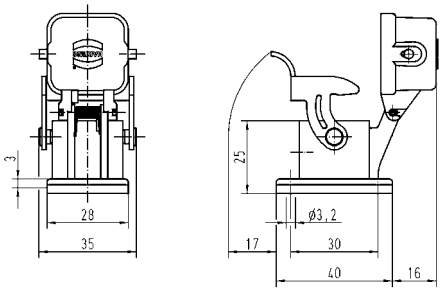
Han® M, Bulkhead mounted housings, angled 		09 37 003 0801	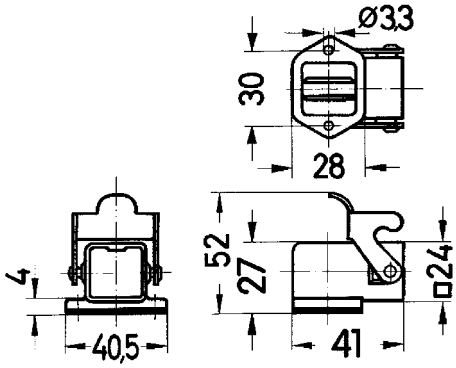 Panel cut out 22 x 22 mm
Han® M, Surface mounted housings, top entry 	1xM20	19 37 003 1250	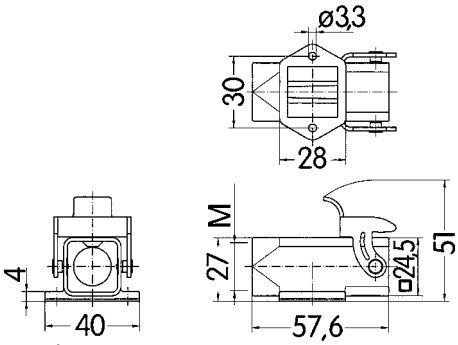 Panel cut out 22 x 22 mm

Identification	Cable entry	Part number	Drawing Dimensions in mm
Han® M, Cable to cable housings, top entry	1xM20	19 37 003 1750	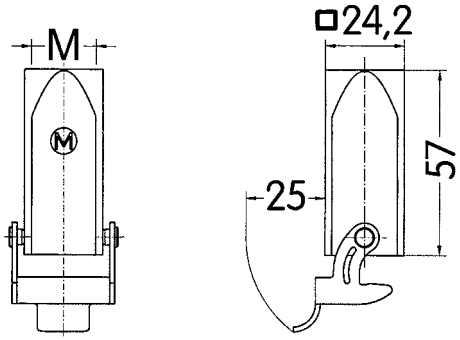
Han® M, Protection cover for housings, for mounted female insert, metal, with securing flex		09 37 003 5405	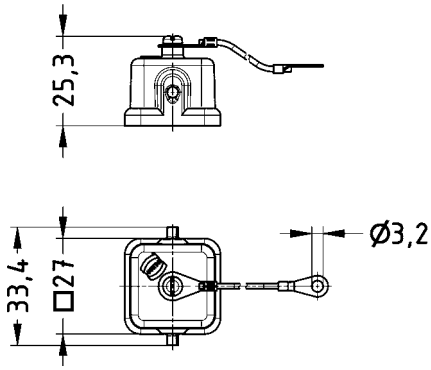
Han® M, Protection cover for housings, for mounted male insert, metal, with securing flex		09 37 003 5406	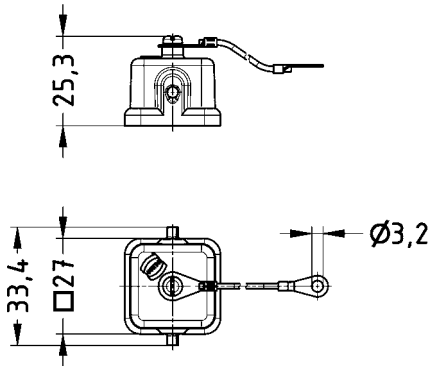
Han® M, Screw mounted housings, top entry	1xM20	19 37 003 1150	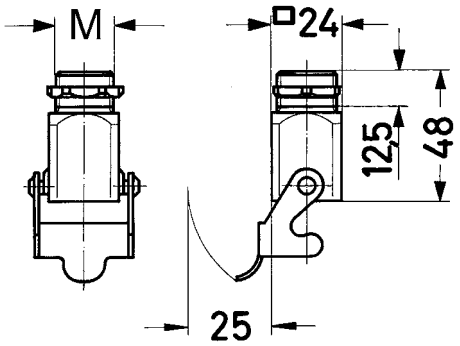

Features

- Hoods/Housings for higher environmental requirements

Technical characteristics

Limiting temperatures	-40 °C ... 125 °C
Flammability (locking lever) acc. to UL 94	V 0
Protection class acc. to UL 50	NEMA type 4/4X/12
Degree of protection acc. to IEC 60529	IP65
Corrosion resistance	ASTM B117-09 (500 h)
Material (hoods/housings)	aluminium
Surface (hoods/housings)	powder-coated
Colour (hoods/housings)	RAL 9005 (black)
Material (locking lever)	stainless steel, polycarbonate, polycarbonate + stainless steel
Material (seal)	FPM

Specifications and approvals

single locking lever

Identification	Cable entry	Part number Low construction	Part number High construction	Drawing Dimensions in mm
Han® M, Hoods, top entry	1xM20 1xM25	19 37 006 1440	19 37 006 0445 19 37 006 0446	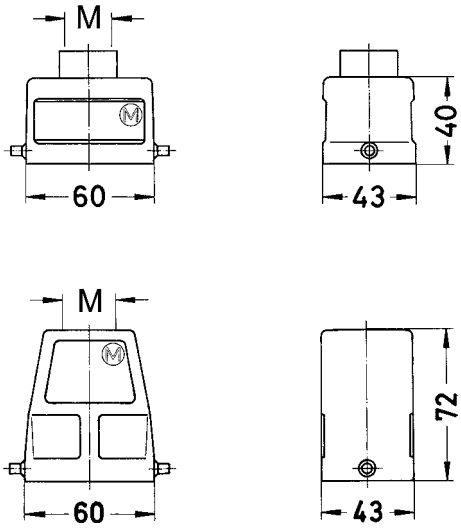
Han® M, Hoods, side entry	1xM20 1xM25	19 37 006 1540	19 37 006 0545 19 37 006 0546	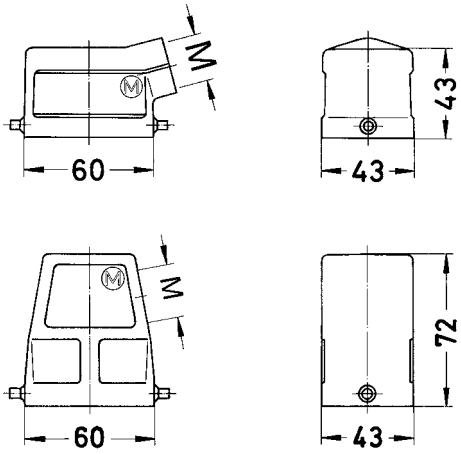

Identification	Cable entry	Part number Low construction	Part number High construction	Drawing Dimensions in mm
Han® M, Bulkhead mounted housings 		09 37 006 0301		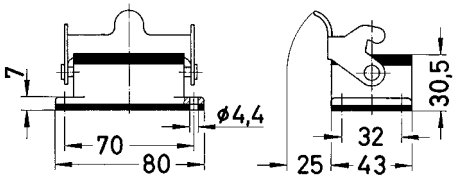 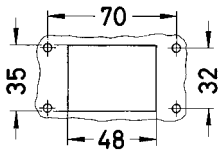 Panel cut out
Han® M, Bulkhead mounted housings, with metal cover 		09 37 006 0318		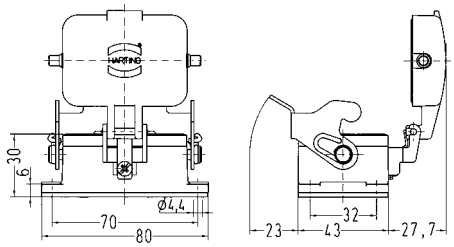
Han® M, Surface mounted housings, side entry 	2xM20	19 37 006 1290		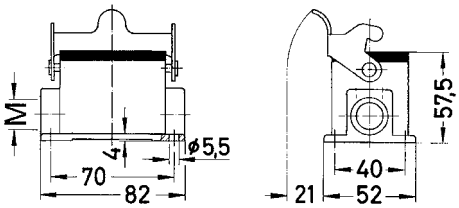
Han® M, Surface mounted housings, side entry, with thermo-plastic cover 	2xM25		19 37 006 0296	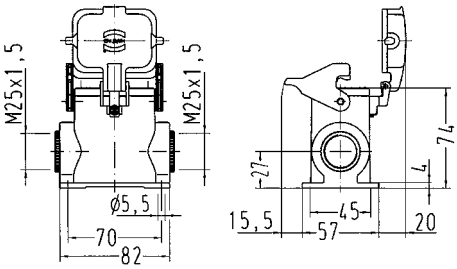

Identification	Cable entry	Part number Low construction	Part number High construction	Drawing Dimensions in mm
Han® M, Protection cover, metal, with securing flex 		09 37 006 5407 09 37 006 5405	09 37 006 5407 09 37 006 5405	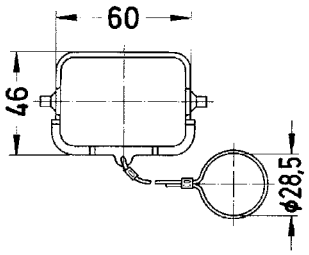 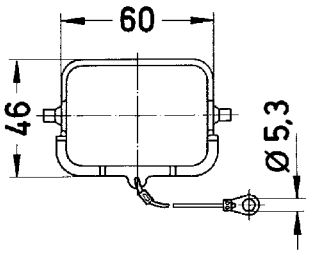

double locking lever

Identification	Cable entry	Part number Low construction	Part number High construction	Drawing Dimensions in mm
Han® M, Hoods, top entry 	1xM20 1xM25 1xM32 2xM20	19 37 010 1420	19 37 010 0426 19 37 010 0427 19 37 010 0465	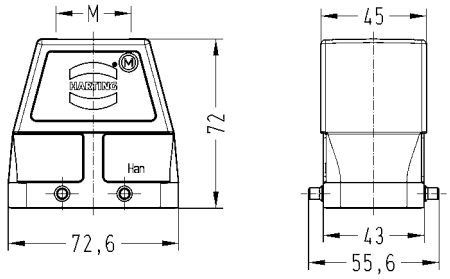
Han® M, Hoods, side entry 	1xM20 1xM25 1xM32 1xM40	19 37 010 1520	19 37 010 0526 19 37 010 0527 19 37 010 0528	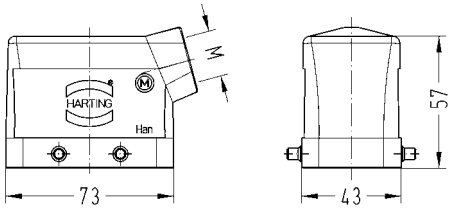 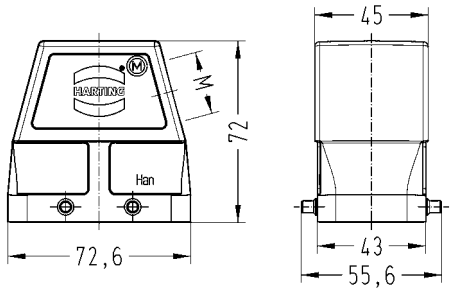
Han® M, Protection cover for hoods, metal, with securing flex 		09 37 010 5403	09 37 010 5403	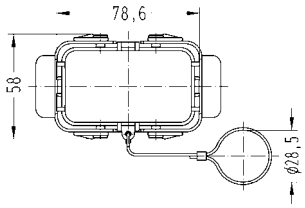

Identification	Cable entry	Part number Low construction	Part number High construction	Drawing Dimensions in mm
Han® M, Bulkhead mounted housings 		09 37 010 0301		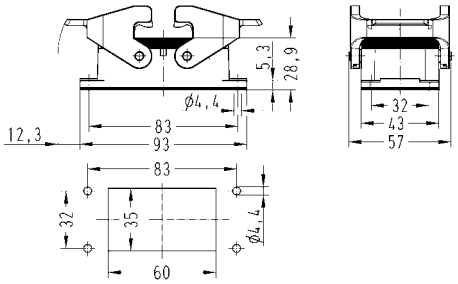 Panel cut out
Han® M, Surface mounted housings, side entry 	2xM20 2xM25 2xM32	19 37 010 1270	19 37 010 0296 19 37 010 0272	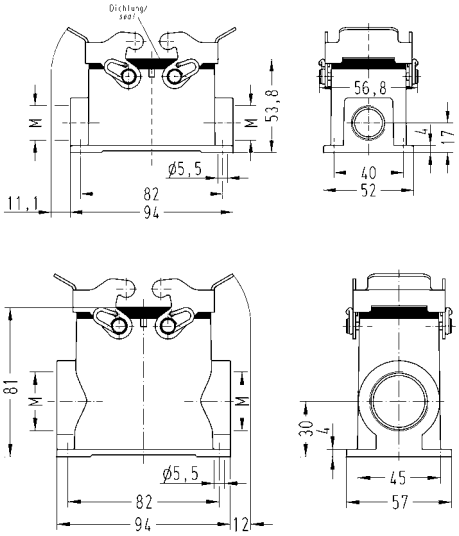
Han® M, Protection cover, metal, with securing flex 		09 37 010 5405	09 37 010 5405	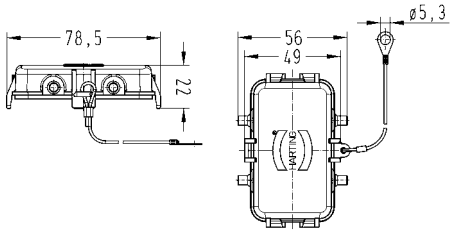

double locking lever

Identification	Cable entry	Part number Low construction	Part number High construction	Drawing Dimensions in mm
Han® M, Hoods, top entry 	1xM25 1xM32	19 37 016 1421	19 37 016 0427	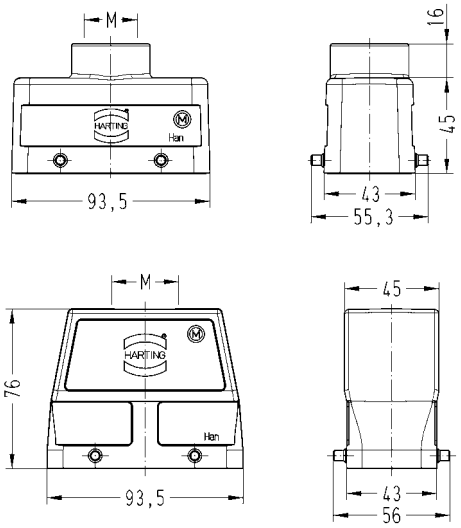
Han® M, Hoods, side entry 	1xM25 1xM32 1xM40	19 37 016 1521	19 37 016 0527 19 37 016 0528	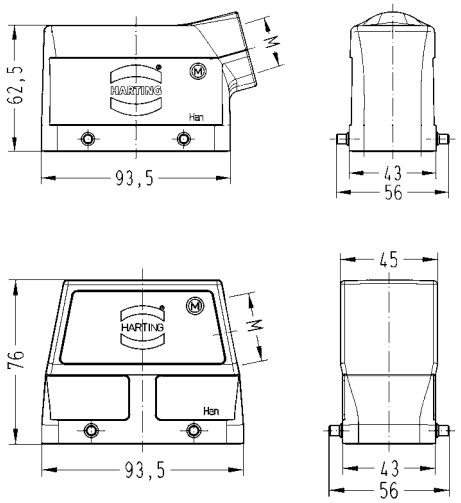
Han® M, Protection cover for hoods, metal, with securing flex 		09 37 016 5402	09 37 016 5402	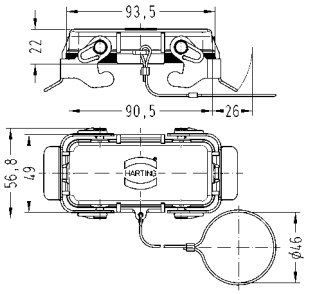

Identification	Cable entry	Part number Low construction	Part number High construction	Drawing Dimensions in mm
Han® M, Bulkhead mounted housings 		09 37 016 0301		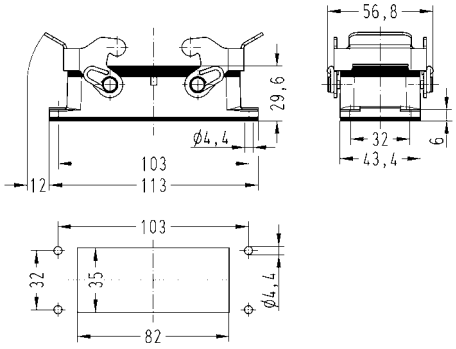 Panel cut out
Han® M, Surface mounted housings, side entry 	1xM25 2xM32 2xM40	19 37 016 1231	19 37 016 0272 19 37 016 0273	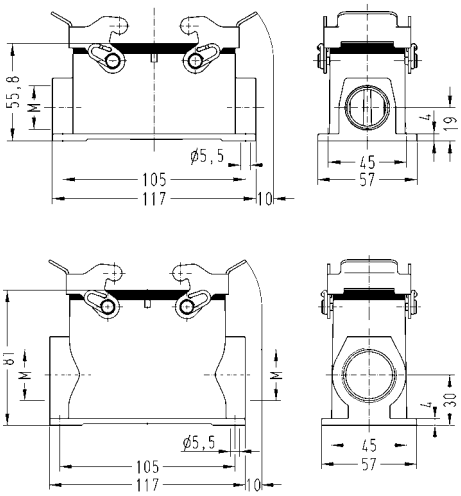
Han® M, Cover for housings, metal, with securing flex 		09 37 016 5405	09 37 016 5405	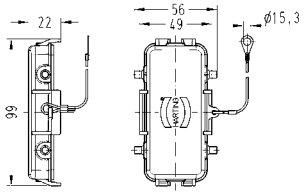

central locking lever

Identification	Cable entry	Part number	Drawing Dimensions in mm
Han® M, Hoods, top entry	1xM32	19 37 016 0487	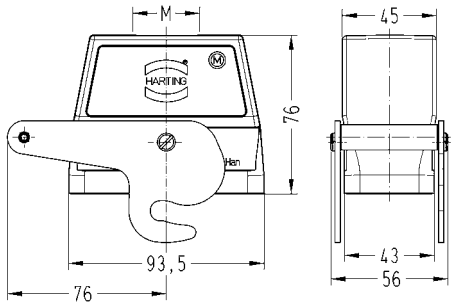
Han® M, Hoods, side entry	1xM32	19 37 016 0587	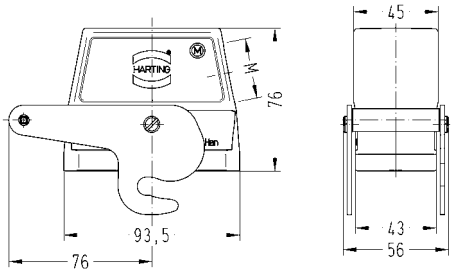
Han® M, Surface mounted housings, side entry	2xM32	19 37 016 0282	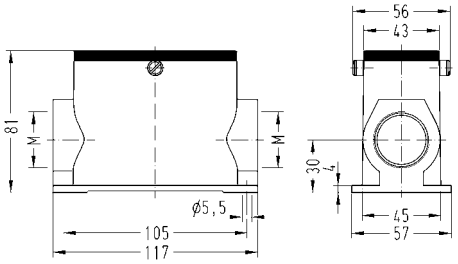

double locking lever

Identification	Cable entry	Part number Low construction	Part number High construction	Drawing Dimensions in mm
Han® M, Hoods, top entry 	1xM25 1xM32 1xM40	19 37 024 1421	19 37 024 0427 19 37 024 0428	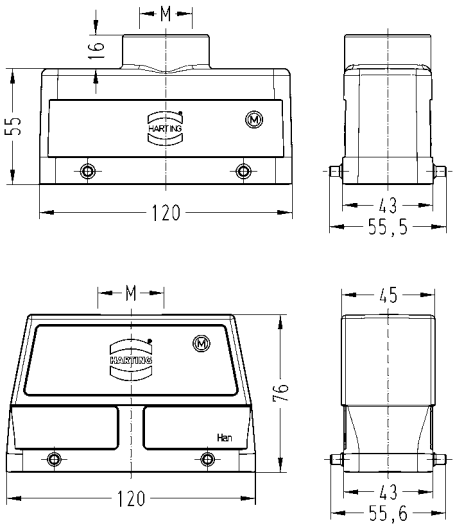
Han® M, Hoods, side entry 	1xM25 1xM32 1xM40	19 37 024 1521	19 37 024 0527 19 37 024 0528	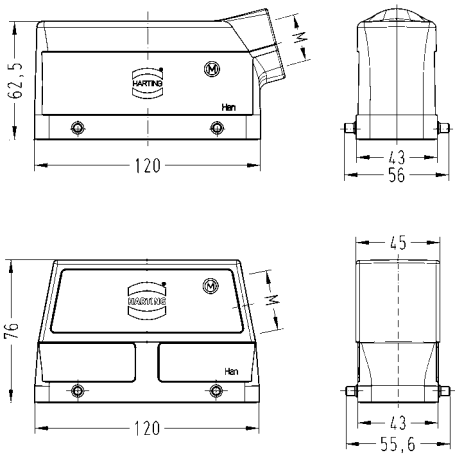
Han® M, Protection cover for hoods, metal 		09 37 024 5402	09 37 024 5402	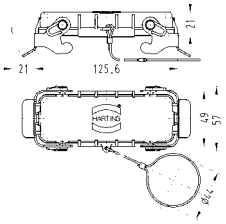

Identification	Cable entry	Part number Low construction	Part number High construction	Drawing Dimensions in mm
Han® M, Bulkhead mounted housings 		09 37 024 0301		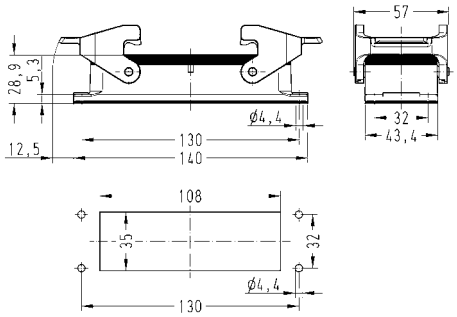 Panel cut out
Han® M, Surface mounted housings, side entry 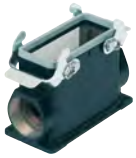	2xM32		19 37 024 0272	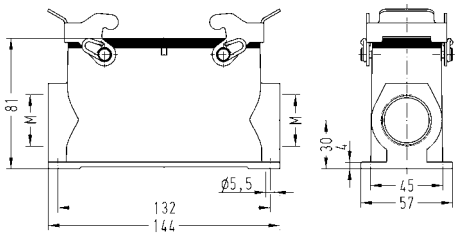
Han® M, Cable to cable housings, side entry 	1xM40		19 37 024 0733	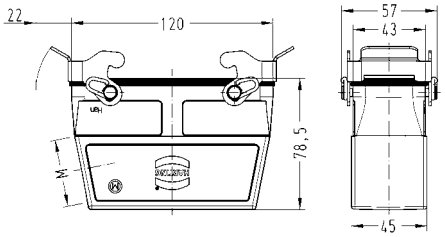
Han® M, Protection cover for housings, metal, with securing flex 		09 37 024 5405	09 37 024 5405	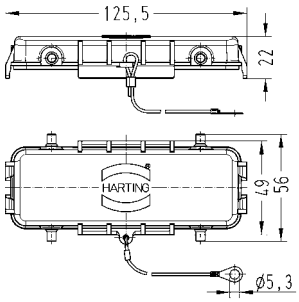

central locking lever

Identification	Cable entry	Part number Low construction	Part number High construction	Drawing Dimensions in mm
Han® M, Hoods, top entry	1xM32		19 37 024 0487	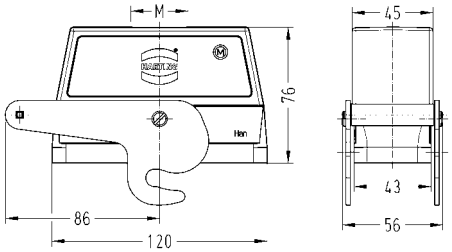
Han® M, Hoods, side entry	1xM32		19 37 024 0587	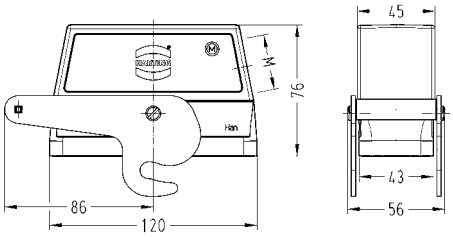
Han® M, Bulkhead mounted housings		09 37 024 0381		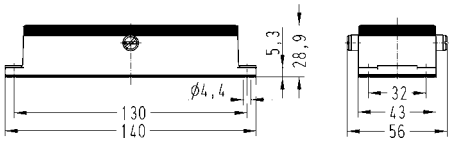 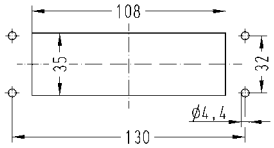 Panel cut out
Han® M, Surface mounted housings, side entry	2xM32		19 37 024 0282	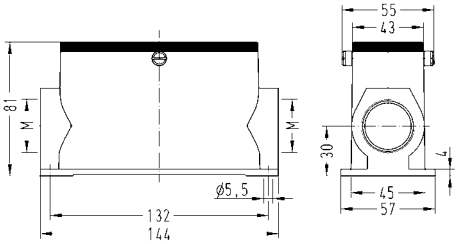

single locking lever

Identification	Cable entry	Part number Low construction	Part number High construction	Drawing Dimensions in mm
Han® M, Hoods, top entry 	1xM40 1xM50 4xM25		19 37 048 0448 19 37 048 0449 19 37 048 0401	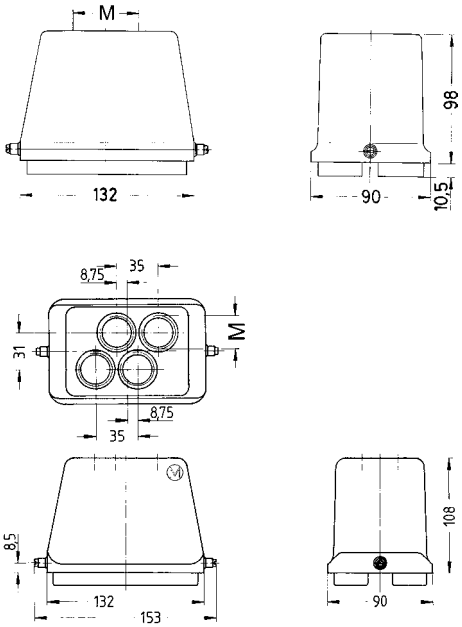
Han® M, Hoods, side entry 	1xM40		19 37 048 0548	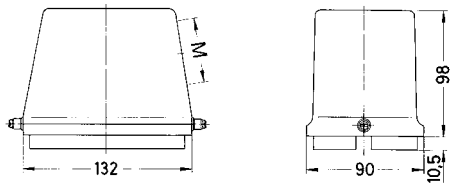
Han® M, Bulkhead mounted housings 		09 37 048 0301		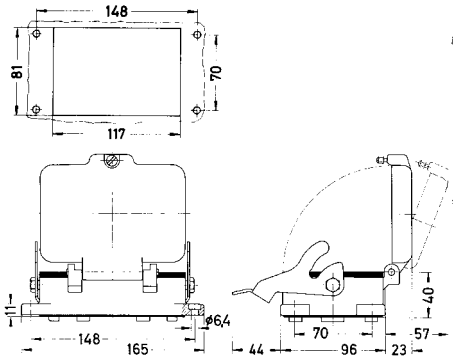

Hoods Housings

Features

- Hoods/Housings for higher EMC requirements
- Excellent shield transitions and a low transfer impedance
- **Field of application:** For sensitive interconnections that have to be shielded against electrical,magnetic or electro-magnetic interferences
- Distinguishing feature: Electrically conductive surface, internal seal

Technical characteristics

Limiting temperatures	-40 °C ... 125 °C
Protection class acc. to UL 50	NEMA type 4/4X/12
Degree of protection acc. to IEC 60529	IP44 / IP67 is achieved with seal screw 09 20 000 9918
Material (hoods/housings)	zinc die-cast
Surface (hoods/housings)	electrical conductive
Material (locking lever)	steel, zinc-plated
Material (seal)	NBR

Specifications and approvals

GL

Hoods/Housings for higher EMC requirements
double locking lever

Identification	Cable entry	Part number	Drawing Dimensions in mm
Han® EMV, Hoods, top entry	1xM20	19 62 003 1440	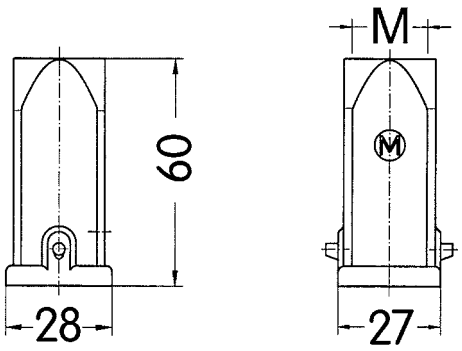
Han® EMV, Hoods, side entry	1xM20	19 62 003 1640	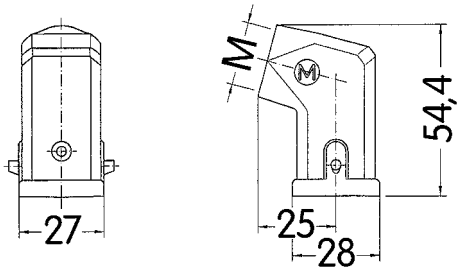
Han® EMV, Bulkhead mounted housings, straight		09 62 003 0301	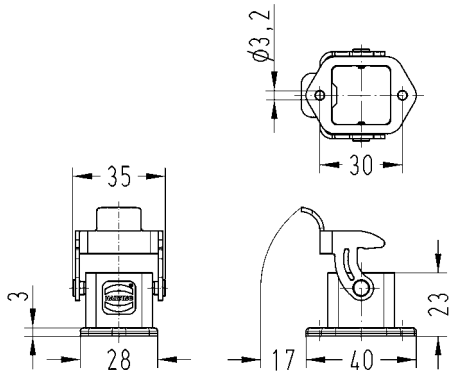 Panel cut out 22 x 22 mm

Identification	Cable entry	Part number	Drawing Dimensions in mm
Han® EMV, Bulkhead mounted housings, angled 		09 62 003 0801 09 62 003 0810	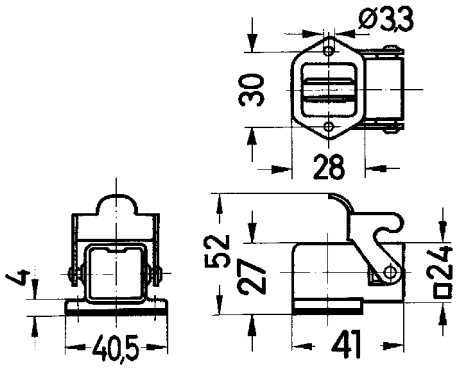 Panel cut out 22 x 22 mm 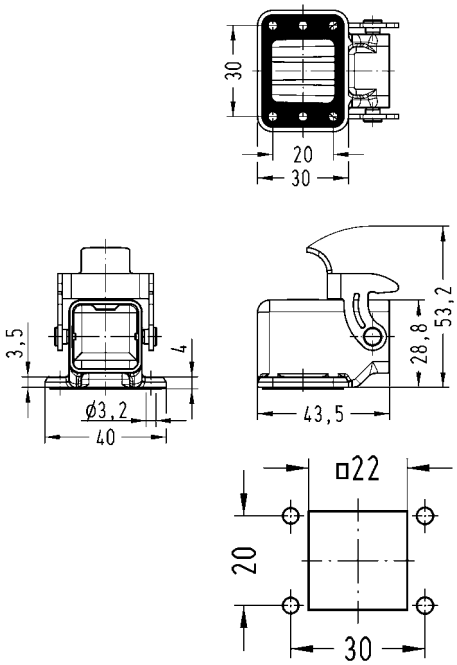
Han® EMV, Surface mounted housings, top entry 	1xM20	19 62 003 1250	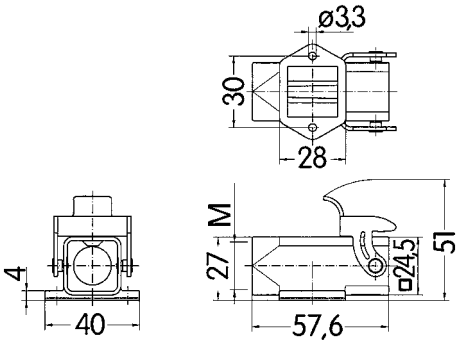 Panel cut out 22 x 22 mm

Identification	Cable entry	Part number	Drawing Dimensions in mm
Han® EMV, Cable to cable housings, top entry	1xM20	19 62 003 1750	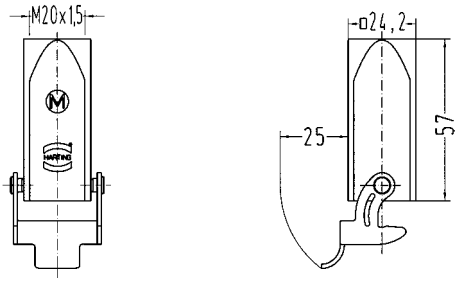
Han® EMV, Panel feed through housings, top entry	1xM20	19 62 003 1120	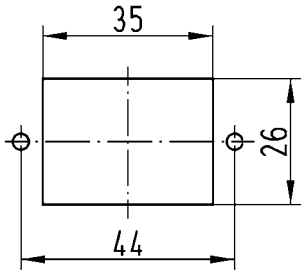 Panel cut out 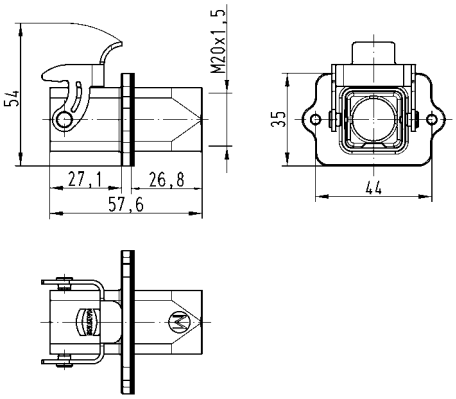
Han® EMV, Screw mounted housings, top entry	1xM20	19 62 003 1150	

Features

- Hoods/Housings for higher EMC requirements
- Excellent shield transitions and a low transfer impedance
- **Field of application:** For sensitive interconnections that have to be shielded against electrical,magnetic or electro-magnetic interferences
- Distinguishing feature: Electrically conductive surface, internal seal

Technical characteristics

Limiting temperatures	-40 °C ... 125 °C
Flammability (locking lever) acc. to UL 94	V 0
Protection class acc. to UL 50	NEMA type 4/4X/12
Degree of protection acc. to IEC 60529	IP65
Material (hoods/housings)	aluminium
Surface (hoods/housings)	unpainted
Material (locking lever)	polycarbonate + stainless steel, stainless steel
Material (seal)	NBR

Specifications and approvals

GL

Hoods/Housings for higher EMC requirements
single locking lever

Identification	Cable entry	Part number	Drawing Dimensions in mm
Han® EMV, Hoods, top entry	1xM25	19 62 015 0446	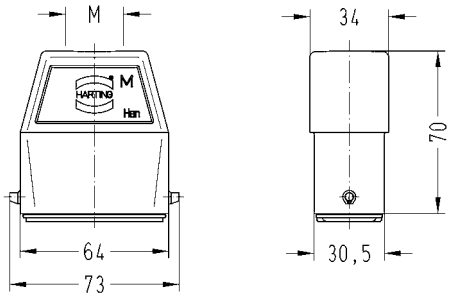
Han® EMV, Hoods, side entry	1xM25	19 62 015 0546	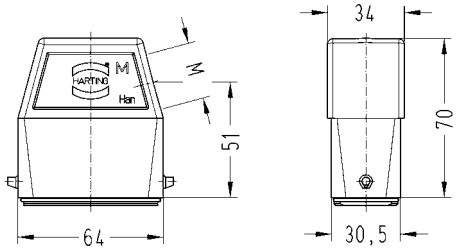
Han® EMV, Bulkhead mounted housings, Han-Easy Lock®		09 62 015 0301	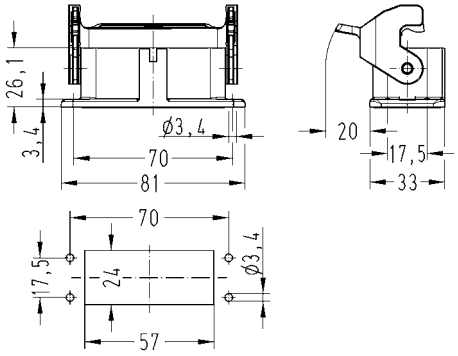 Panel cut out

Hoods/Housings for higher EMC requirements
single locking lever

Identification	Cable entry	Part number	Drawing Dimensions in mm
Han® EMV, Hoods, top entry	1xM25	19 62 025 0446	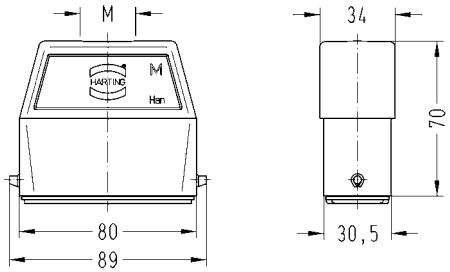
Han® EMV, Hoods, side entry	1xM25	19 62 025 0546	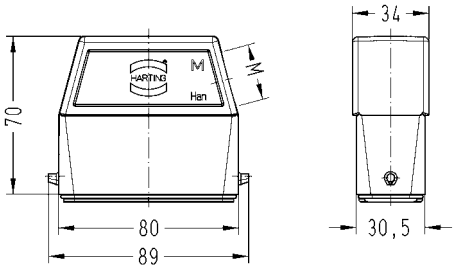
Han® EMV, Bulkhead mounted housings, Han-Easy Lock®		09 62 025 0301	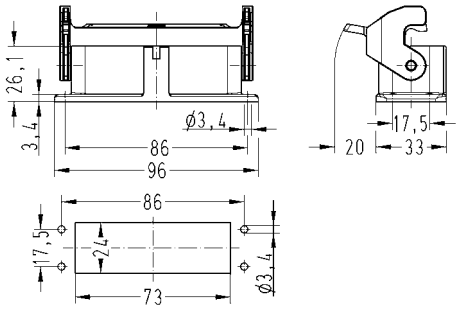 Panel cut out

Hoods/Housings for higher EMC requirements

Identification	Cable entry	Part number	Drawing Dimensions in mm
Han® EMV, Hoods, top entry, screw locking	1xM25 1xM32	19 62 006 0441 19 62 006 0442	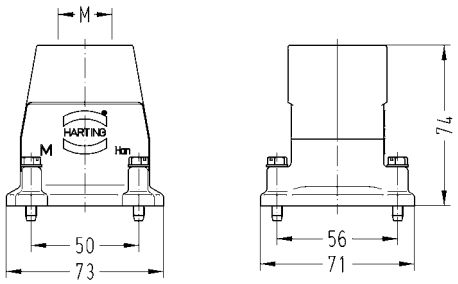
Han® EMV, Hoods, side entry, screw locking 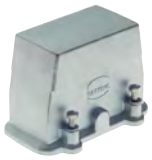	1xM25	19 62 006 0541	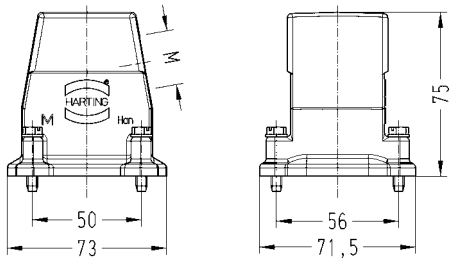
Han® EMV, Bulkhead mounted housings, screw locking		09 62 006 0301	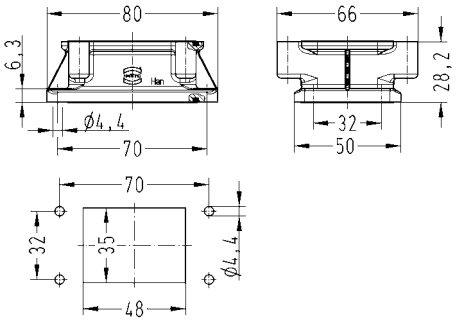 Panel cut out

Hoods/Housings for higher EMC requirements

Identification	Cable entry	Part number	Drawing Dimensions in mm
Han® EMV, Hoods, top entry, screw locking	1xM32	19 62 010 0442	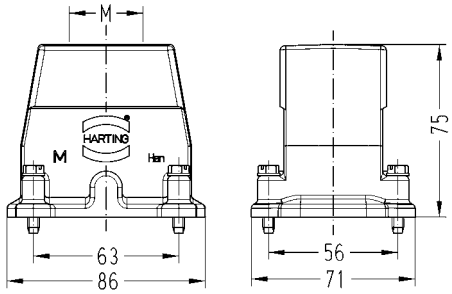
Han® EMV, Hoods, side entry, screw locking	1xM32 1xM40	19 62 010 0542 19 62 010 0543	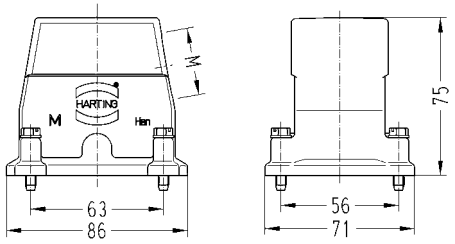
Han® EMV, Bulkhead mounted housings, screw locking		09 62 010 0301	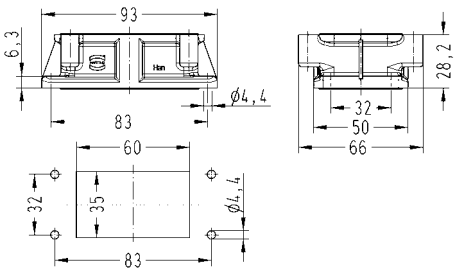 Panel cut out

Hoods/Housings for higher EMC requirements

Identification	Cable entry	Part number	Drawing Dimensions in mm
Han® EMV, Hoods, top entry, screw locking	1xM32	19 62 040 0442	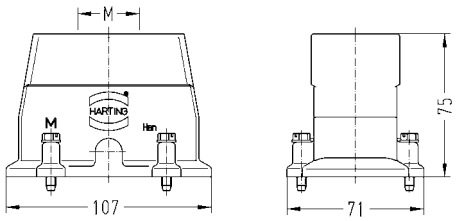
Han® EMV, Hoods, side entry, screw locking	1xM32	19 62 040 0542	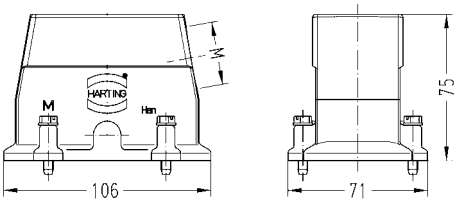
Han® EMV, Bulkhead mounted housings, screw locking		09 62 040 0301	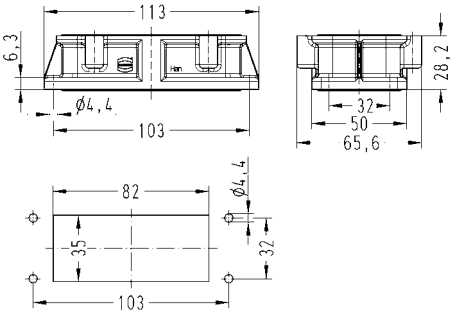 Panel cut out

Hoods/Housings for higher EMC requirements

Identification	Cable entry	Part number	Drawing Dimensions in mm
Han® EMV, Hoods, top entry, screw locking	1xM40	19 62 064 0443	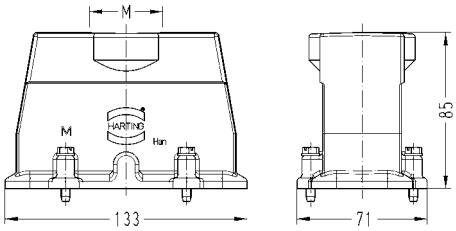
Han® EMV, Hoods, side entry, screw locking	1xM40	19 62 064 0543	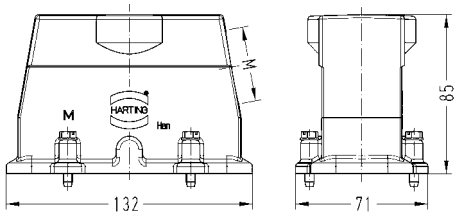
Han® EMV, Bulkhead mounted housings, screw locking		09 62 064 0301	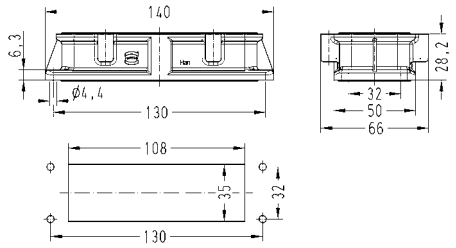 Panel cut out

Features

- Hoods/Housings for higher EMC requirements
- Excellent shield transitions and a low transfer impedance
- Locking levers: Han-Easy Lock®
- **Field of application:** For sensitive interconnections that have to be shielded against electrical,magnetic or electro-magnetic interferences
- Distinguishing feature: Electrically conductive surface, internal seal

Technical characteristics

Limiting temperatures	-40 °C ... 125 °C
Limiting temperatures with High Temp components	-40 °C ... 200 °C
Protection class acc. to UL 50	NEMA type 4/4X/12
Degree of protection acc. to IEC 60529	IP65
Material (hoods/housings)	aluminium
Surface (hoods/housings)	unpainted
Material (locking lever)	polycarbonate + stainless steel
Material (seal)	NBR

Specifications and approvals

GL

single locking lever

Identification	Cable entry	Part number Low construction	Part number High construction	Drawing Dimensions in mm
Han® EMC/B, Han® High Temp, Hoods, top entry 	1xM20 1xM25 1xM32	19 62 806 1440	19 62 806 0446 19 62 806 0447	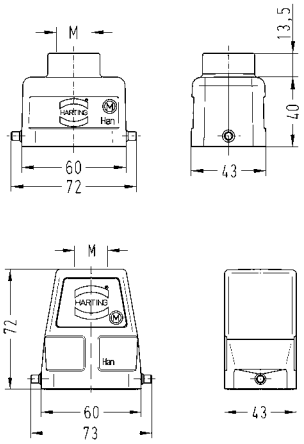
Han® EMC/B, Han® High Temp, Hoods, side entry 	1xM20 1xM25 1xM32	19 62 806 1540	19 62 806 0546 19 62 806 0547	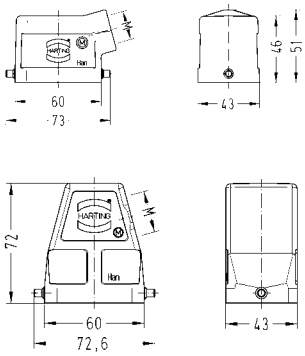
Han® EMC/B, Han® High Temp, Hoods, without cable entry 			09 62 806 0801	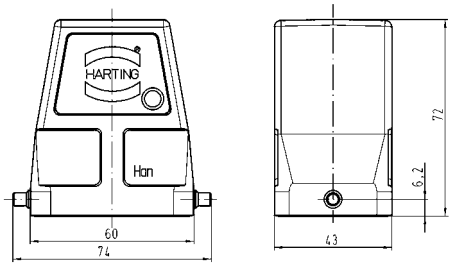

Identification	Cable entry	Part number Low construction	Part number High construction	Drawing Dimensions in mm
Han® EMC/B, Bulkhead mounted housings, Han-Easy Lock® 		09 62 806 0301		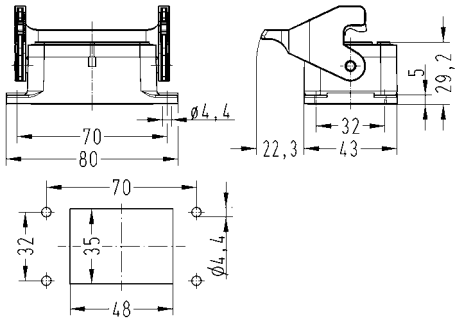 Panel cut out
Han® EMC/B, Surface mounted housings, side entry, Han-Easy Lock® 	2xM20	19 62 806 1290		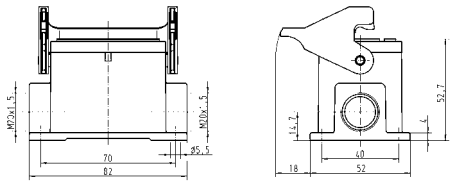

double locking lever

Identification	Cable entry	Part number Low construction	Part number High construction	Drawing Dimensions in mm
Han® EMC/B, Han® High Temp, Hoods, top entry 	1xM20 1xM25 1xM32	19 62 810 1420 19 62 810 1421	19 62 810 0426 19 62 810 0427	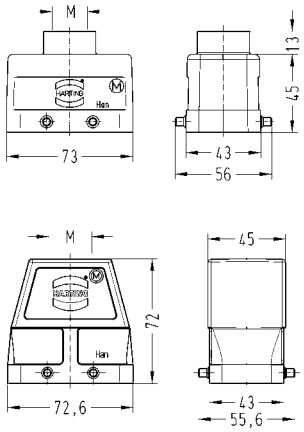
Han® EMC/B, Han® High Temp, Hoods, side entry 	1xM20 1xM25 1xM32	19 62 810 1520	19 62 810 0526 19 62 810 0527	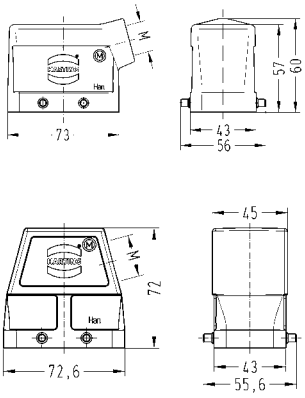
Han® EMC/B, Han® High Temp, Hoods, without cable entry 			09 62 810 0801	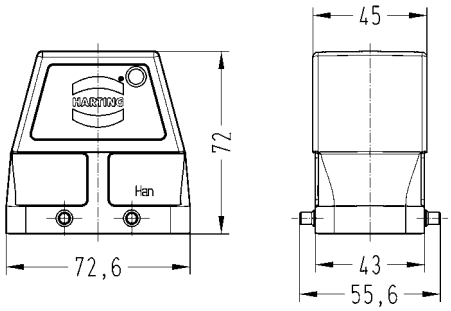

Identification	Cable entry	Part number Low construction	Part number High construction	Drawing Dimensions in mm
Han® EMC/B, Bulkhead mounted housings, Han-Easy Lock® 		09 62 810 0301		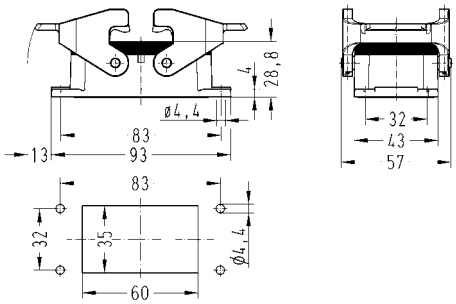 Panel cut out
Han® EMC/B, Surface mounted housings, side entry, Han-Easy Lock® 	2xM25 2xM32	19 62 810 1271	19 62 810 0272	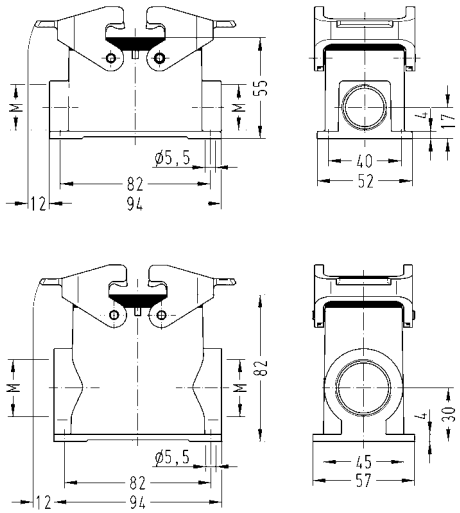
Han® EMC/B, Cable to cable housings, top entry, Han-Easy Lock® 	1xM32		19 62 810 0757	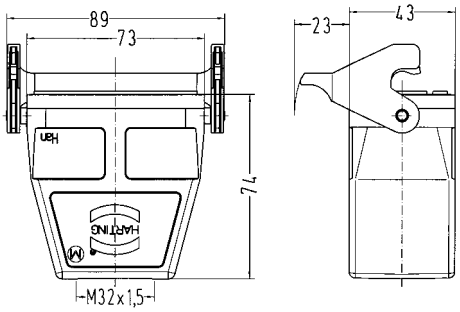

single locking lever

Identification	Cable entry	Part number Low construction	Part number High construction	Drawing Dimensions in mm
Han® EMC/B, Hoods, top entry	1xM25 1xM32		19 62 810 0446 19 62 810 0447	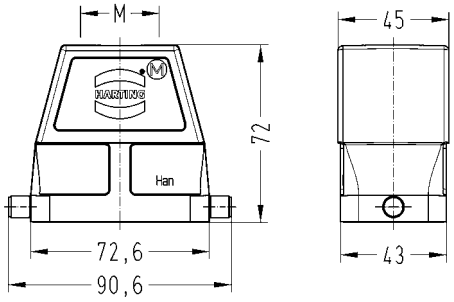
Han® EMC/B, Hoods, side entry	1xM32		19 62 810 0547	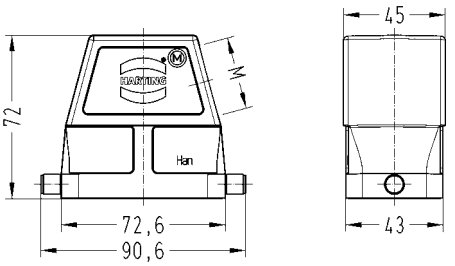
Han® EMC/B, Bulkhead mounted housings, Han-Easy Lock®		09 62 810 0305		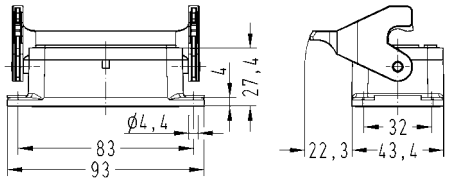 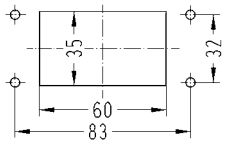 Panel cut out

double locking lever

Identification	Cable entry	Part number Low construction	Part number High construction	Drawing Dimensions in mm
Han® EMC/B, Han® High Temp, Hoods, top entry 	1xM25 1xM32	19 62 816 1421	19 62 816 0427	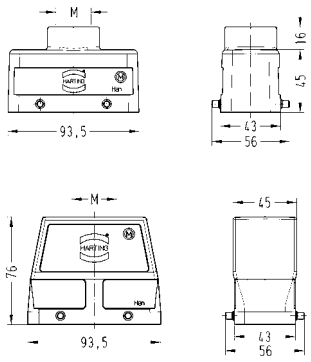
Han® EMC/B, Han® High Temp, Hoods, side entry 	1xM25 1xM32	19 62 816 1521	19 62 816 0527	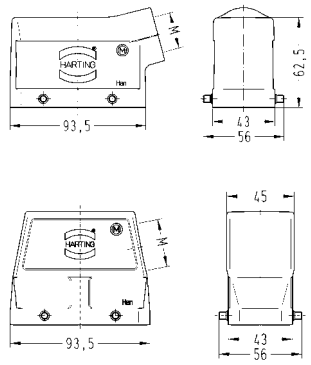
Han® EMC/B, Han® High Temp, Hoods, without cable entry 			09 62 816 0801	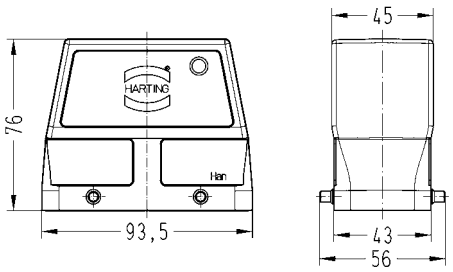

Identification	Cable entry	Part number Low construction	Part number High construction	Drawing Dimensions in mm
Han® EMC/B, Bulkhead mounted housings, Han-Easy Lock® 		09 62 816 0301		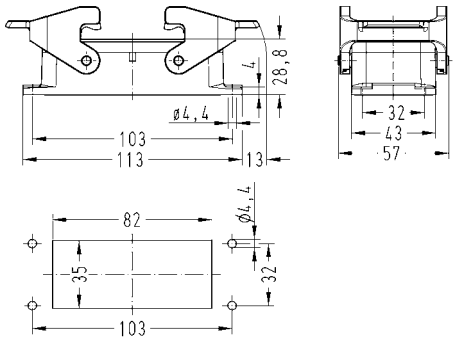 Panel cut out
Han® EMC/B, Surface mounted housings, side entry, Han-Easy Lock® 	2xM25 2xM40	19 62 816 1271	19 62 816 0273	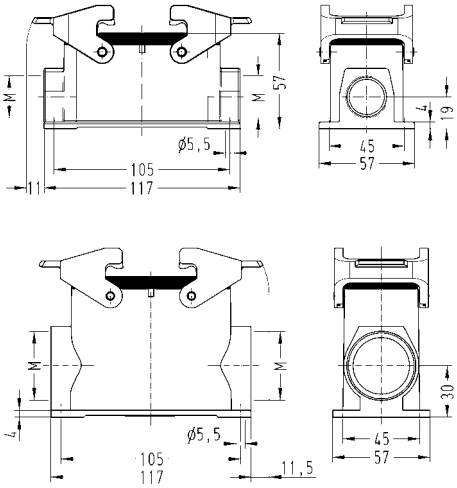

double locking lever

Identification	Cable entry	Part number Low construction	Part number High construction	Drawing Dimensions in mm
Han® EMC/B, Han® High Temp, Hoods, top entry 	1xM32	19 62 824 1422	19 62 824 0427	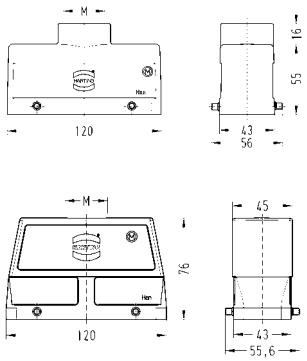
Han® EMC/B, Han® High Temp, Hoods, side entry 	1xM25 1xM32 1xM40	19 62 824 1521	19 62 824 0527 19 62 824 0528	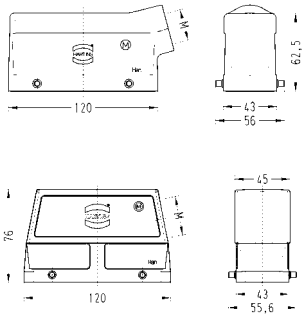
Han® EMC/B, Han® High Temp, Hoods, without cable entry 			09 62 824 0801	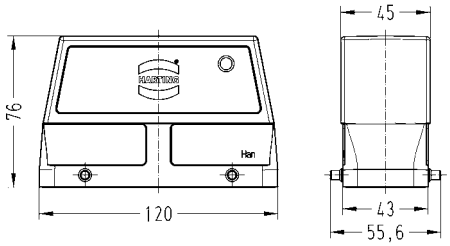
Han® EMC/B, Bulkhead mounted housings, Han-Easy Lock® 		09 62 824 0301		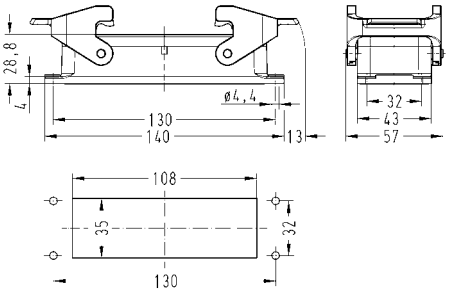 Panel cut out

Hoods Housings

Identification	Cable entry	Part number Low construction	Part number High construction	Drawing Dimensions in mm
Han® EMC/B, Surface mounted housings, side entry, Han-Easy Lock® 	2xM25 2xM40	19 62 824 1271	19 62 824 0273	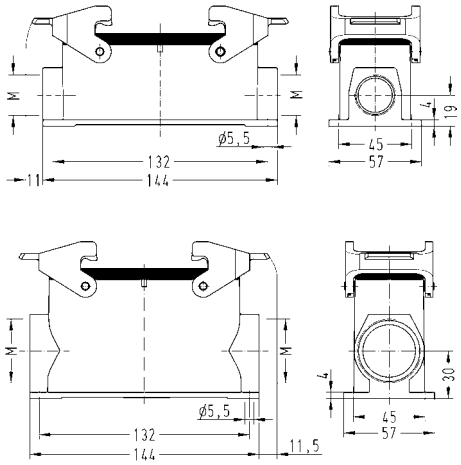

Features

- Hoods/Housings for harsh environmental requirements
- Highly EMC resistant
- Screw locking M4
- Field of application: For external electrical interconnections in vehicles, in highly demanding environments and wet areas, as well as for sensitive interconnections that have to be shielded
- Distinguishing feature: colour-coded black, internal seal (RAL 9005)

Technical characteristics

Limiting temperatures	-40 °C ... 125 °C
Protection class acc. to UL 50	NEMA 4/12, NEMA type 4/4X/12
Degree of protection acc. to IEC 60529	IP69K
Degree of protection acc. to IEC 60529	IP65 / IP68
Tightening torque (locking)	2 Nm
Corrosion resistance	ASTM B117-09 (500 h)
Material (hoods/housings)	zinc die-cast
Surface (hoods/housings)	powder-coated, chromated
Colour (hoods/housings)	RAL 9005 (black)
Material (seal)	NBR
Material (screwing)	stainless steel

Specifications and approvals

Hoods/Housings for harsh environmental requirements

Identification	Cable entry	Part number	Drawing Dimensions in mm
Han® HPR, Hoods, with sealing screw, top entry, toggle locking	1xM20	19 40 703 0400	
Han® HPR, Hoods, with sealing screw, top entry, screw locking	1xM20 1xM25	19 40 703 0410 19 40 703 0411	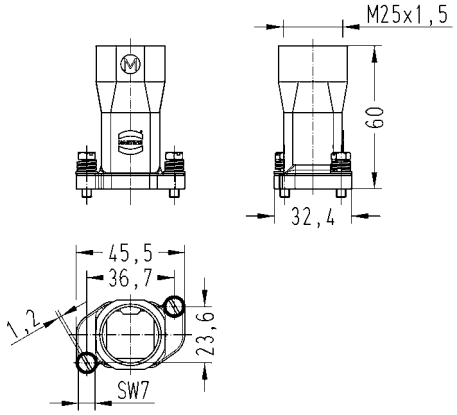
Han® HPR, Bulkhead mounted housings, with sealing screw, toggle locking		09 40 703 0301	
Han® HPR, Bulkhead mounted housings, with sealing screw, screw locking		09 40 703 0311	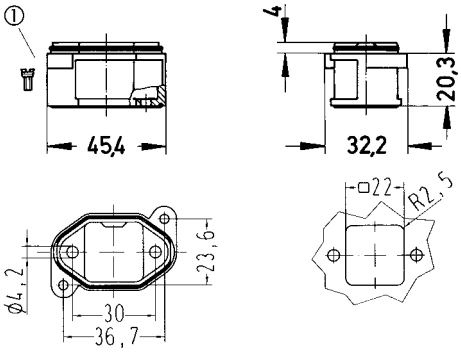 Panel cut out 21.3 x 21.3 mm ① sealing screw

Identification	Cable entry	Part number	Drawing Dimensions in mm
Han® HPR, Bulkhead mounted housings, angled, with sealing screw, screw locking 		09 40 703 0950	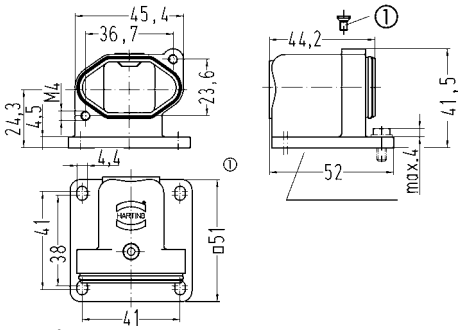 Panel cut out 21.3 x 21.3 mm ① sealing screw
Han® HPR, Bulkhead mounted housings, angled, screw locking, long version, feed through hole for fixing screws 		09 40 703 0951	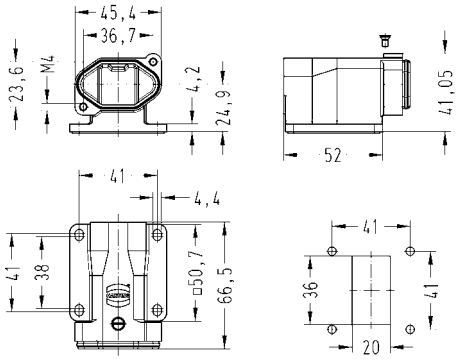 Panel cut out
Han® HPR, Bulkhead mounted housings, angled, screw locking, long version, tapped blind hole for fixing screws 		09 40 703 0953	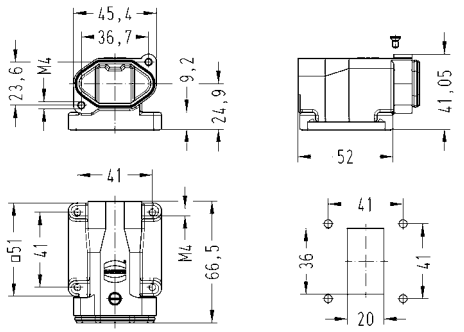 Panel cut out
Han® HPR, Surface mounted housings, angled, with sealing screw, top entry, screw locking, bottom closed	1xM20	19 40 703 0950	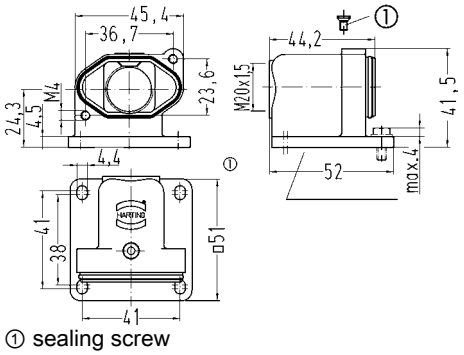 ① sealing screw

Identification	Cable entry	Part number	Drawing Dimensions in mm
Han® HPR, Surface mounted housings, angled, with sealing screw, top entry, screw locking, long version with closed bottom and feed through hole for fixing screws	1xM25	19 40 703 0951	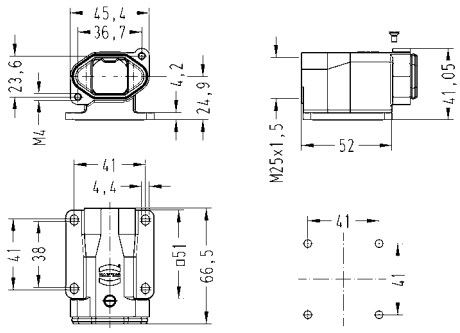 Panel cut out
Han® HPR, Surface mounted housings, angled, with sealing screw, top entry, screw locking, long version with closed bottom and tapped blind hole for fixing screws	1xM25	19 40 703 0953	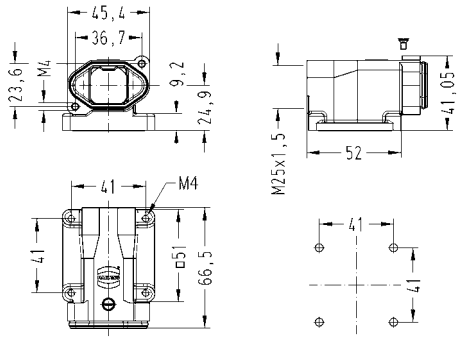 Panel cut out
Han® HPR, Cover for housings, toggle locking		09 40 703 5401	
Han® HPR, Cover for housings, toggle locking, with securing flex		09 40 703 5402	
Han® HPR, Cover for housings, screw locking		09 40 703 5411	
Han® HPR, Cover for housings, screw locking, with securing flex		09 40 703 5412	
Han® HPR, Dust protection cover, plastic 		09 40 003 5406	

Identification	Cable entry	Part number	Drawing Dimensions in mm
Han® HPR, Adaptor, powder-coated, top entry, open bottom for assembly of bulkhead mounted bulk-head mounted position	1xM20	19 40 703 0900	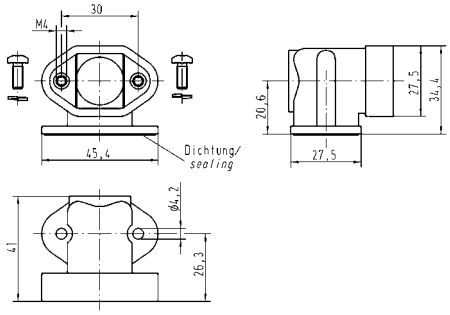
Han® HPR, Adaptor, powder-coated, open bottom for assembly of bulkhead mounted bulk-head mounted position		09 40 703 0902	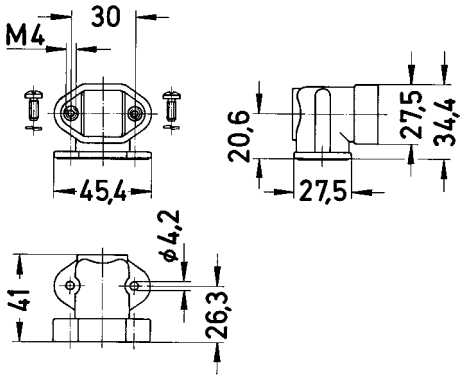

Hoods/Housings for harsh environmental requirements

Identification	Cable entry	Part number	Drawing Dimensions in mm
Han® HPR, Hoods, with sealing screw, top entry, toggle locking	1xM20	19 40 003 0400	
Han® HPR, Hoods, with sealing screw, top entry, screw locking	1xM20 1xM25	19 40 003 0410 19 40 003 0411	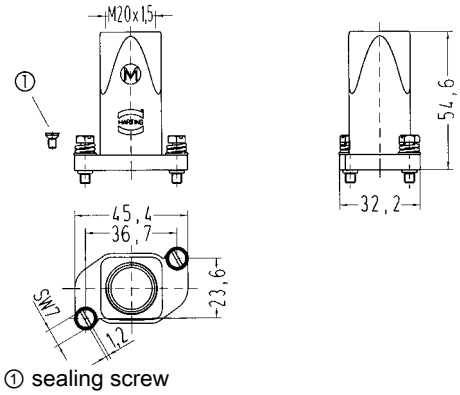 1 sealing screw 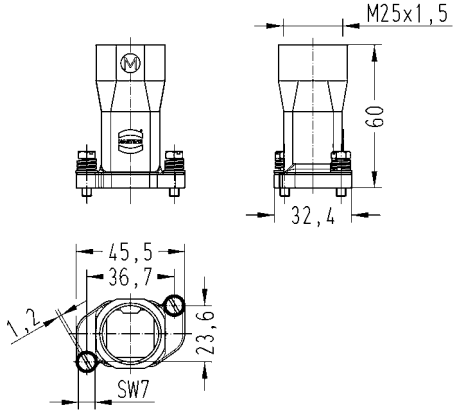
Han® HPR, Bulkhead mounted housings, with sealing screw, toggle locking		09 40 003 0301	

Identification	Cable entry	Part number	Drawing Dimensions in mm
Han® HPR, Bulkhead mounted housings, with sealing screw, screw locking 		09 40 003 0311	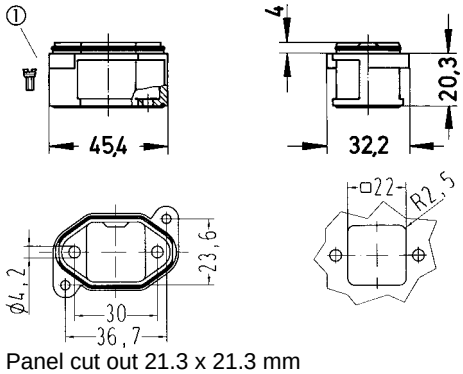 Panel cut out 21.3 x 21.3 mm ① sealing screw
Han® HPR, Bulkhead mounted housings, angled, with sealing screw, screw locking 		09 40 003 0950	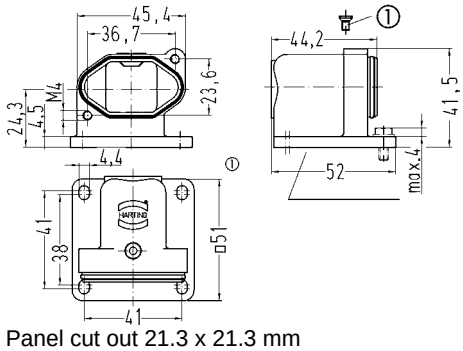 Panel cut out 21.3 x 21.3 mm ① sealing screw
Han® HPR, Bulkhead mounted housings, angled, screw locking, long version, feed through hole for fixing screws 		09 40 003 0951	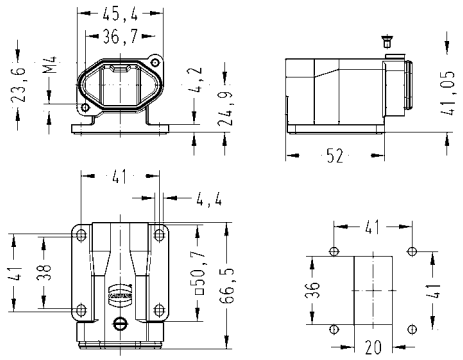 Panel cut out
Han® HPR, Bulkhead mounted housings, angled, with sealing screw, screw locking, long version, tapped blind hole for fixing screws 		09 40 003 0953	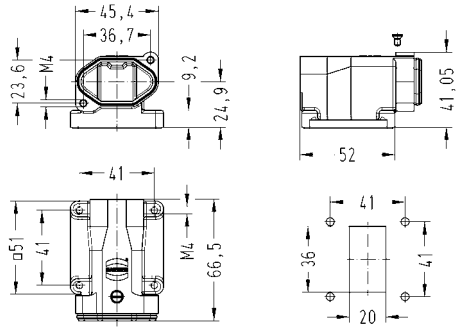 Panel cut out

Identification	Cable entry	Part number	Drawing Dimensions in mm
Han® HPR, Surface mounted housings, angled, with sealing screw, top entry, screw locking, bottom closed 	1xM20	19 40 003 0950	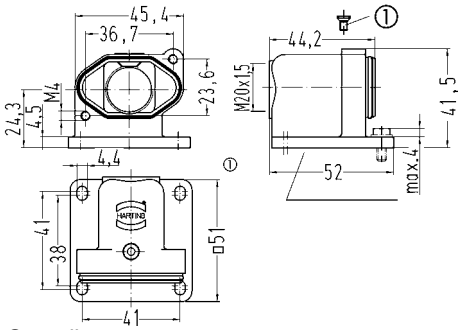 ① sealing screw
Han® HPR, Surface mounted housings, angled, with sealing screw, top entry, screw locking, long version with closed bottom and feed through hole for fixing screws	1xM25	19 40 003 0951	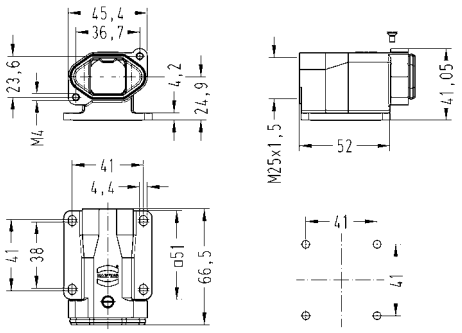 Panel cut out
Han® HPR, Surface mounted housings, angled, with sealing screw, top entry, screw locking, long version with closed bottom and tapped blind hole for fixing screws	1xM25	19 40 003 0953	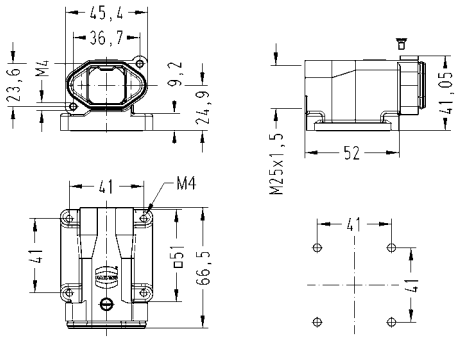 Panel cut out
Han® HPR, Cover for housings, toggle locking		09 40 003 5401	
Han® HPR, Cover for housings, toggle locking, with securing flex		09 40 003 5402	
Han® HPR, Cover for housings, screw locking		09 40 003 5411	
Han® HPR, Cover for housings, screw locking, with securing flex		09 40 003 5412	

Identification	Cable entry	Part number	Drawing Dimensions in mm
Han® HPR, Dust protection cover, plastic 		09 40 003 5406	
Han® HPR, Adaptor, chromated, top entry, open bottom for assembly of bulkhead mounted bulk-head mounted position	1xM20	19 40 003 0900	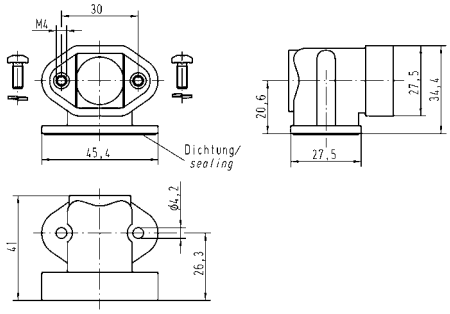
Han® HPR, Adaptor, chromated, open bottom for assembly of bulkhead mounted bulk-head mounted position		09 40 003 0902	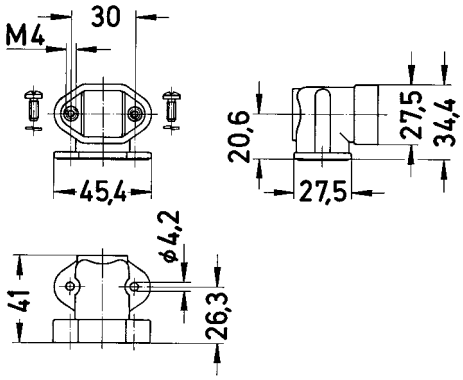

Features

- Hoods/Housings, pressure tight
- Highly EMC resistant
- Screw locking M6
- Field of application: For external electrical interconnections in vehicles, in highly demanding environments and wet areas, as well as for sensitive interconnections that have to be shielded
- Distinguishing feature: colour-coded black, internal seal (RAL 9005)

Technical characteristics

Limiting temperatures	-40 °C ... 125 °C
Protection class acc. to UL 50	NEMA 4/12
Degree of protection acc. to IEC 60529	IP69K
Degree of protection acc. to IEC 60529	IP65 / IP68
Tightening torque (locking)	4 Nm
Corrosion resistance	ASTM B117-09 (500 h)
Material (hoods/housings)	aluminium die-cast, corrosion resistant
Surface (hoods/housings)	powder-coated
Colour (hoods/housings)	RAL 9005 (black)
Material (locking lever)	stainless steel
Material (seal)	NBR
Material (screwing)	stainless steel

Specifications and approvals

Identification	Cable entry	Part number	Drawing Dimensions in mm
Han® HPR, Hoods, top entry, toggle locking	1xM25	19 40 006 0401	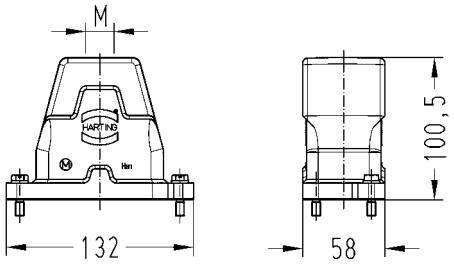
Han® HPR, Hoods, top entry, screw locking	1xM20 1xM25 1xM32 1xM40	19 40 006 0410 19 40 006 0411 19 40 006 0412 19 40 006 0413	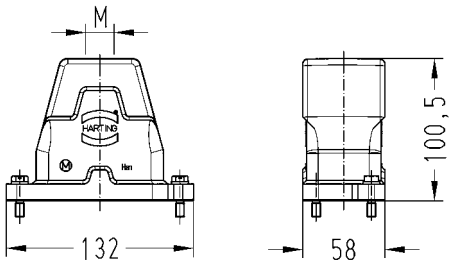 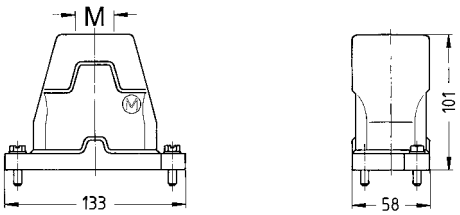
Han® HPR, Hoods, side entry, toggle locking	1xM25	19 40 006 0501	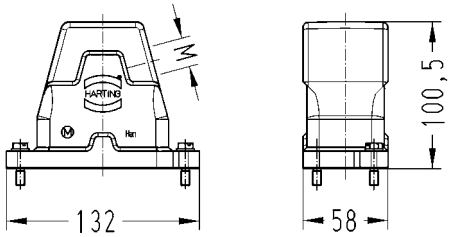
Han® HPR, Hoods, side entry, screw locking	1xM20 1xM25 1xM32 1xM40	19 40 006 0510 19 40 006 0511 19 40 006 0512 19 40 006 0513	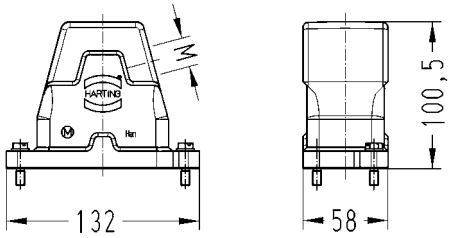

Identification	Cable entry	Part number	Drawing Dimensions in mm
Han® HPR, Hoods, without cable entry, screw locking		09 40 006 0811	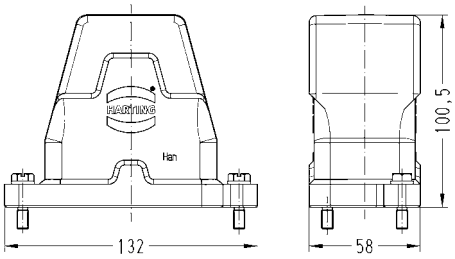
Han® HPR, Protection cover for hoods, metal, toggle locking		09 40 006 5404	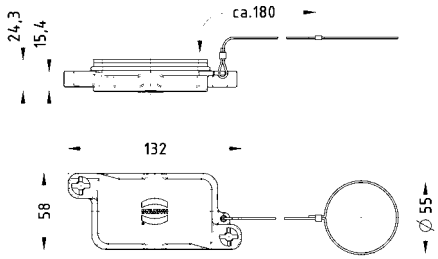
Han® HPR, Protection cover for hoods, metal, screw locking		09 40 006 5414	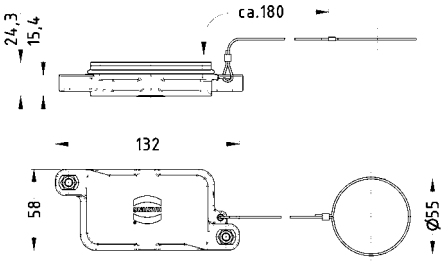
Han® HPR, Bulkhead mounted housings, toggle locking		09 40 006 0301	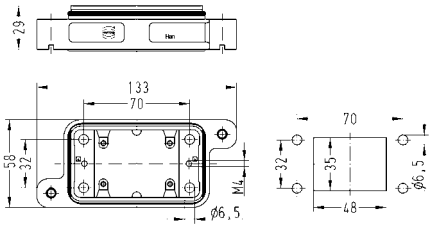
Han® HPR, Bulkhead mounted housings, screw locking		09 40 006 0311	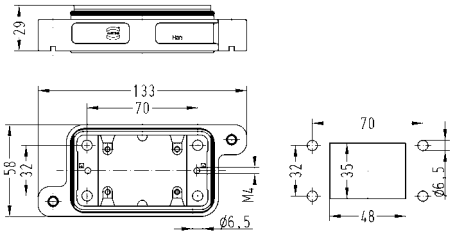

Identification	Cable entry	Part number	Drawing Dimensions in mm
Han® HPR, Bulkhead mounted housings, screw locking, with metal cover		09 40 006 0317	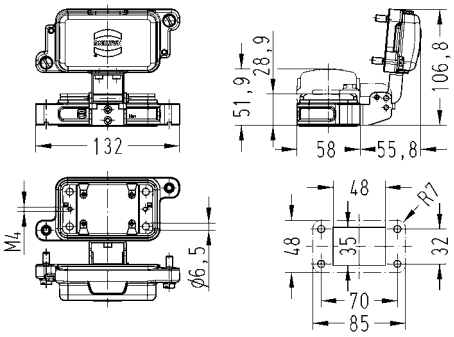
Han® HPR, Surface mounted housings, screw locking, horizontal version Han® HPR, Surface mounted housings, side entry, screw locking	1xM25 1xM20 1xM25 1xM32	19 40 006 0911 19 40 006 1260 19 40 006 1261 19 40 006 1262	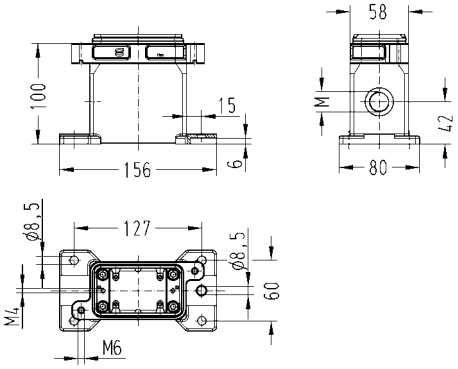
Han® HPR, Cover for housings, metal, toggle locking		09 40 006 5401	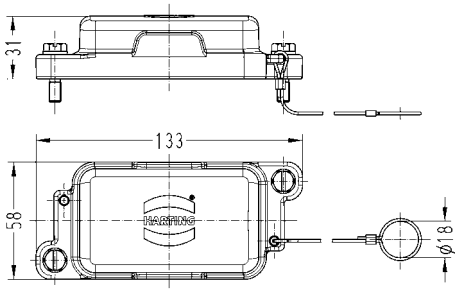
Han® HPR, Cover for housings, metal, screw locking		09 40 006 5411	
Han® HPR, Protection cover for housings, plastic		09 40 006 5406	

Identification	Cable entry	Part number	Drawing Dimensions in mm
Han® HPR, Panel feed through housings, for mounting from inside, top entry, screw locking 	1xM40	19 40 006 1113	
Han® HPR, Panel feed through housings, for mounting from outside, top entry, screw locking 	1xM40	19 40 006 1118	
Han® HPR, Mounting frames 		09 40 000 9901	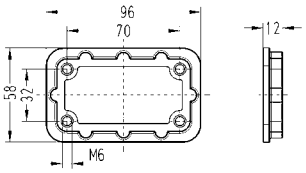

Identification	Cable entry	Part number	Drawing Dimensions in mm
Han® HPR, Hoods, top entry, toggle locking	1xM25	19 40 010 0401	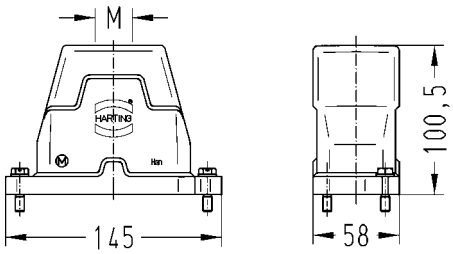
Han® HPR, Hoods, top entry, screw locking	1xM25 1xM32 1xM40 2xM20	19 40 010 0411 19 40 010 0412 19 40 010 0413 19 40 010 0430	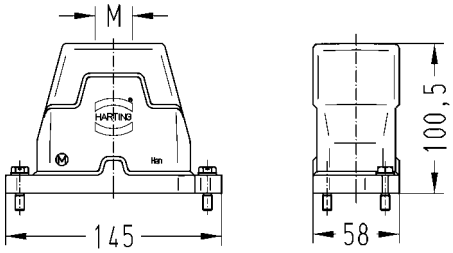
Han® HPR, Hoods, side entry, toggle locking	1xM25	19 40 010 0501	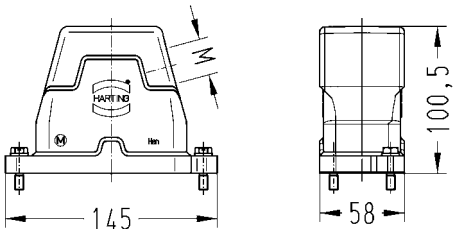
Han® HPR, Hoods, side entry, screw locking	1xM25 1xM32 1xM40	19 40 010 0511 19 40 010 0512 19 40 010 0513	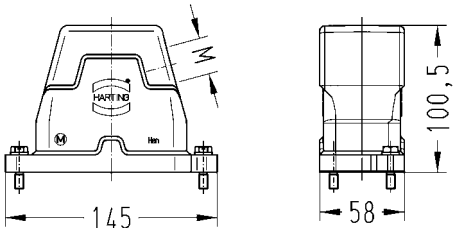

Identification	Cable entry	Part number	Drawing Dimensions in mm
Han® HPR, Hoods, without cable entry, screw locking		09 40 010 0811	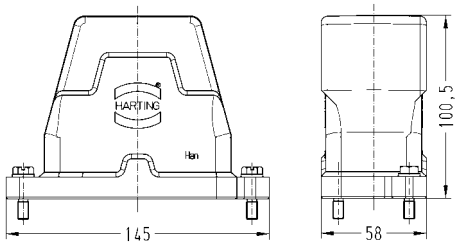
Han® HPR, Protection cover for hoods, metal, toggle locking Han® HPR, Protection cover for hoods, metal, screw locking		09 40 010 5404 09 40 010 5414	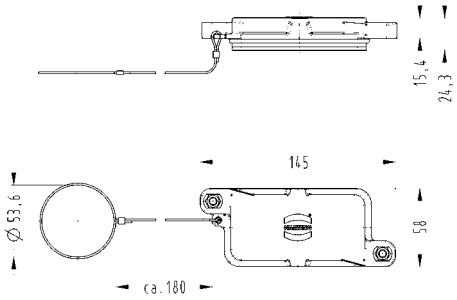
Han® HPR, Bulkhead mounted housings, toggle locking		09 40 010 0301	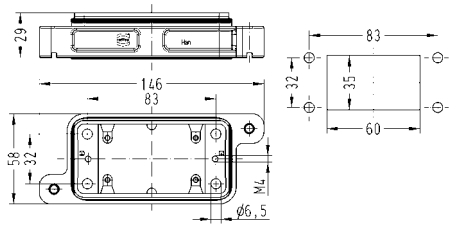
Han® HPR, Bulkhead mounted housings, screw locking		09 40 010 0311	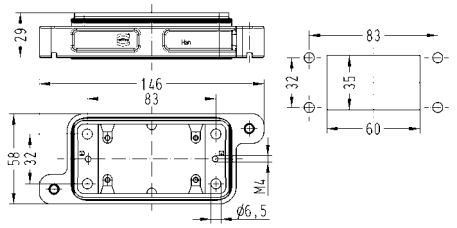
Han® HPR, Bulkhead mounted housings, screw locking, with metal cover		09 40 010 0317	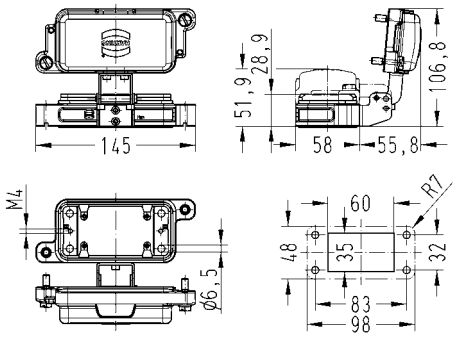

Identification	Cable entry	Part number	Drawing Dimensions in mm
Han® HPR, Surface mounted housings, side entry, screw locking	1xM20 1xM32 1xM40 2xM25 2xM32	19 40 010 1260 19 40 010 1262 19 40 010 1263 19 40 010 1271 19 40 010 1272	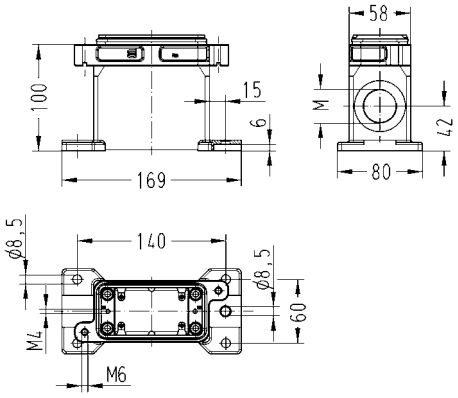
Han® HPR, Cover for housings, metal, toggle locking		09 40 010 5401	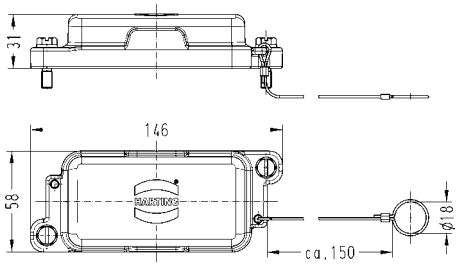
Han® HPR, Cover for housings, metal, screw locking		09 40 010 5411	
Han® HPR, Panel feed through housings, for mounting from inside, screw locking	1xM40	19 40 010 1113	
Han® HPR, Panel feed through housings, for mounting from outside, screw locking	1xM40	19 40 010 1118	
Han® HPR, Dust protection cover, plastic		09 40 010 5406	

Identification	Cable entry	Part number	Drawing Dimensions in mm
Han® HPR, Mounting frames		09 40 000 9902	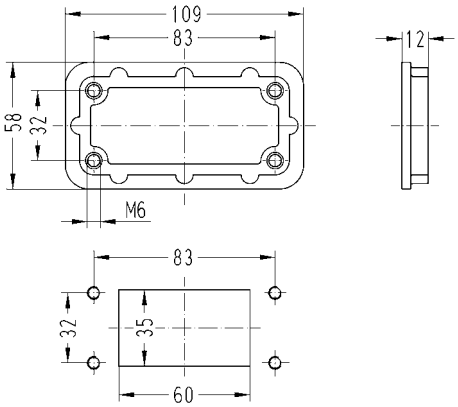 Panel cut out

Identification	Cable entry	Part number	Drawing Dimensions in mm
Han® HPR, Hoods, top entry, toggle locking	1xM32	19 40 016 0402	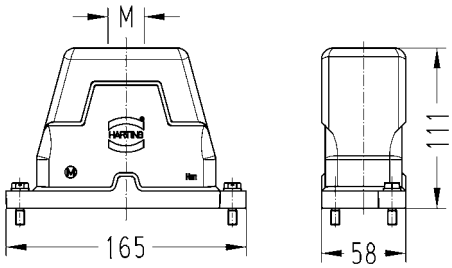
Han® HPR, Hoods, top entry, screw locking	1xM25 1xM32 1xM40 1xM50 2xM25	19 40 016 0411 19 40 016 0412 19 40 016 0413 19 40 016 0414 19 40 016 0431	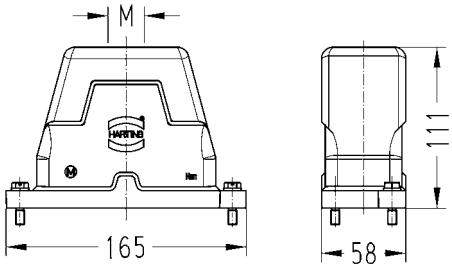 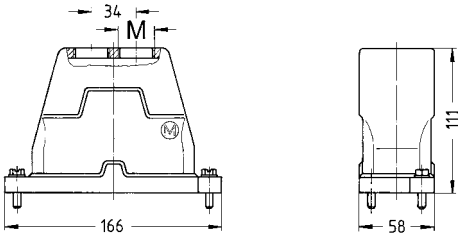
Han® HPR, Hoods, side entry, toggle locking	1xM32	19 40 016 0502	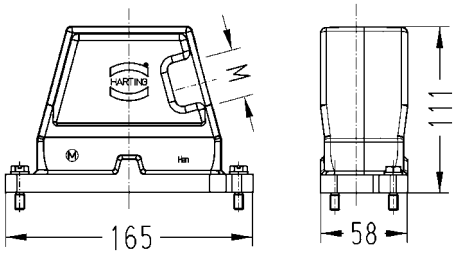

Identification	Cable entry	Part number	Drawing Dimensions in mm
Han® HPR, Hoods, side entry, screw locking	1xM25 1xM32 1xM40 1xM50	19 40 016 0511 19 40 016 0512 19 40 016 0513 19 40 016 0514	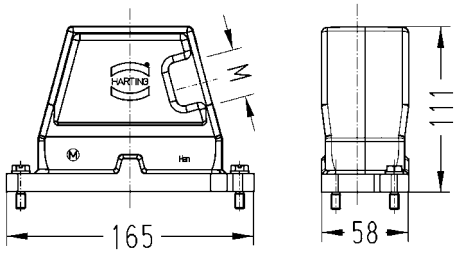
Han® HPR, Hoods, without cable entry, screw locking		09 40 016 0811	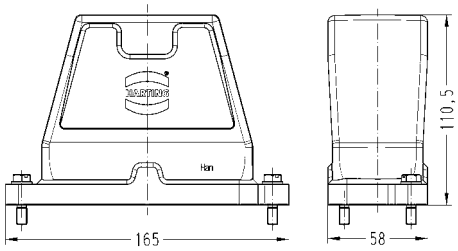
Han® HPR, Protection cover for hoods, metal, toggle locking		09 40 016 5404	
Han® HPR, Protection cover for hoods, metal, screw locking		09 40 016 5414	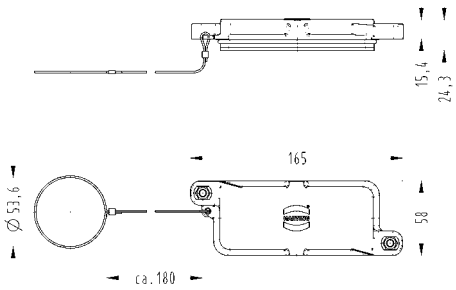
Han® HPR, Bulkhead mounted housings, screw locking, with metal cover, open		09 40 016 0317	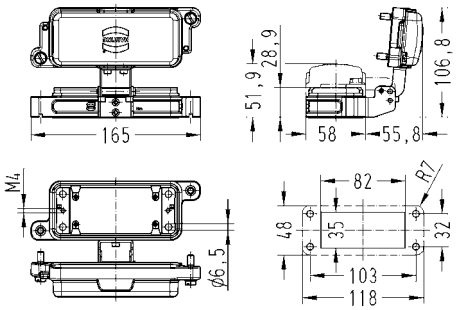
Han® HPR, Bulkhead mounted housings, toggle locking		09 40 016 0301	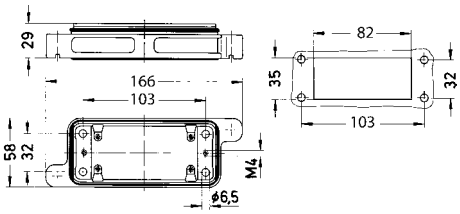

Identification	Cable entry	Part number	Drawing Dimensions in mm
Han® HPR, Bulkhead mounted housings, screw locking 		09 40 016 0311	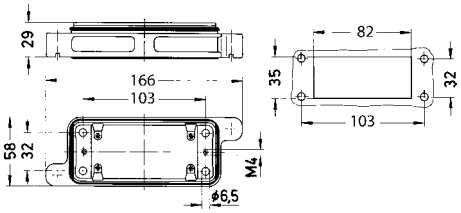
Han® HPR, Surface mounted housings, screw locking, horizontal version 	1xM32	19 40 016 0912	
Han® HPR, Surface mounted housings, side entry, screw locking 	1xM25 1xM32 1xM40 2xM40	19 40 016 1261 19 40 016 1262 19 40 016 1263 19 40 016 1273	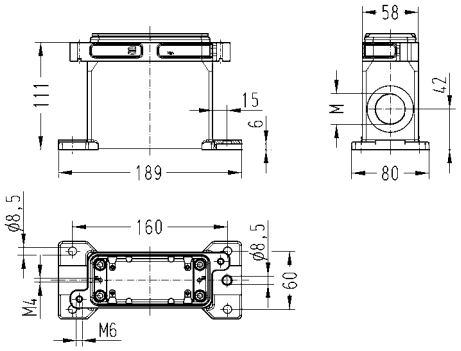
Han® HPR, Surface mounted housings, side entry, screw locking, horizontal version 	2xM32	19 40 016 0922	
Han® HPR, Surface mounted housings, without cable entry, screw locking 		09 40 016 1201	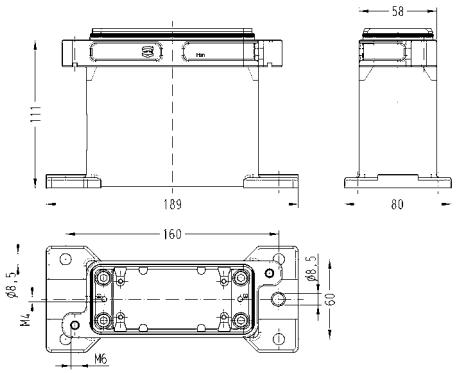

Identification	Cable entry	Part number	Drawing Dimensions in mm
Han® HPR, Cover for housings, metal, toggle locking 		09 40 016 5401	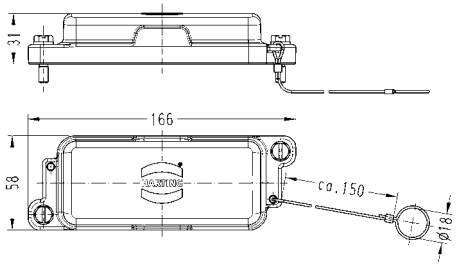
Han® HPR, Cover for housings, metal, screw locking 		09 40 016 5411	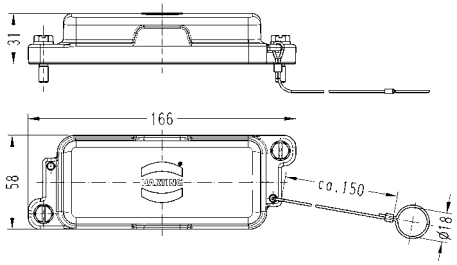
Han® HPR, Protection cover for housings, plastic		09 40 016 5406	
Han® HPR, Panel feed through housings, for mounting from inside, screw locking 	1xM50	19 40 016 1114	
Han® HPR, Panel feed through housings, for mounting from outside, screw locking 	1xM50	19 40 016 1119	
Han® HPR, Mounting frames, screw locking 		09 40 000 9903	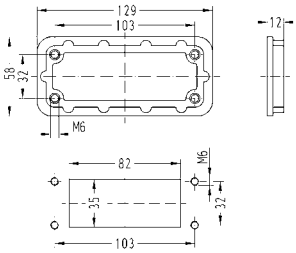 Panel cut out

Identification	Cable entry	Part number	Drawing Dimensions in mm
Han® HPR, Hoods, top entry, toggle locking 	1xM32 1xM63	19 40 024 0402 19 40 024 0410	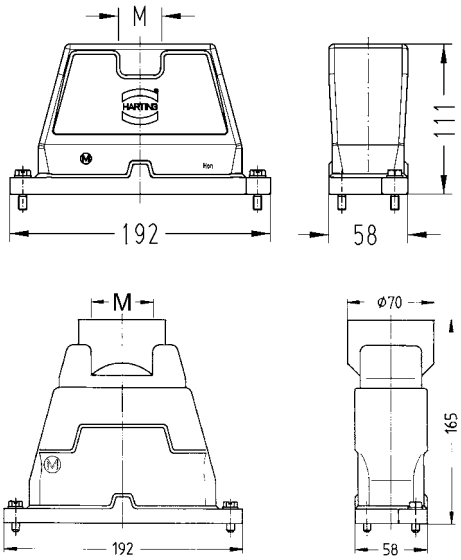
Han® HPR, Hoods, top entry, screw locking, high construction 	1xM50 1xM63 3xM32 4xM25	19 40 024 0419 19 40 024 0420 19 40 024 0467 19 40 024 0477	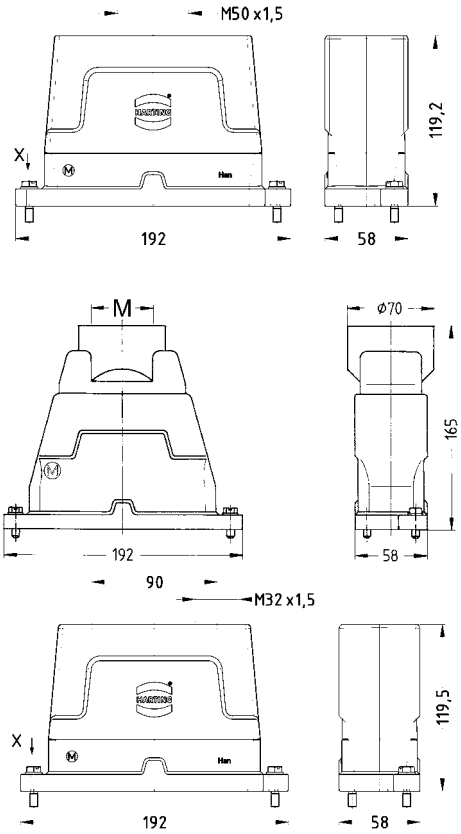

Identification	Cable entry	Part number	Drawing Dimensions in mm
Han® HPR, Hoods, top entry, screw locking 	1xM32 1xM40 1xM50 2xM25 2xM32 2xM40 3xM25 3xM25, 1xM20 4xM20 4xM25	19 40 024 0412 19 40 024 0413 19 40 024 0414 19 40 024 0431 19 40 024 0432 19 40 024 0433 19 40 024 0461 19 40 024 0471 19 40 024 0473 19 40 024 0474	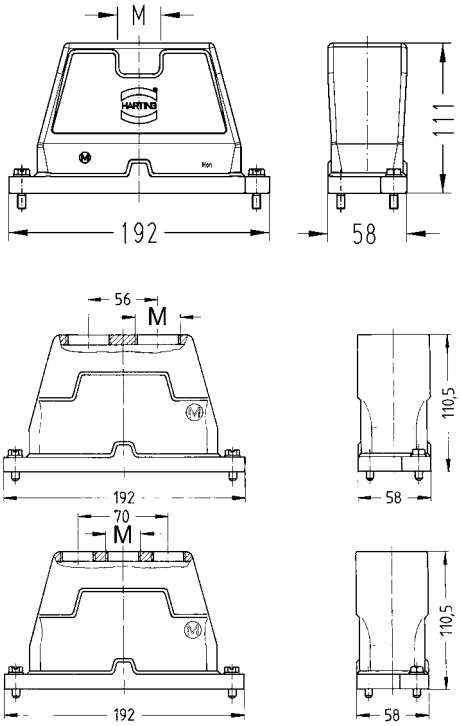
Han® HPR, Hoods, side entry, toggle locking 	1xM40	19 40 024 0503	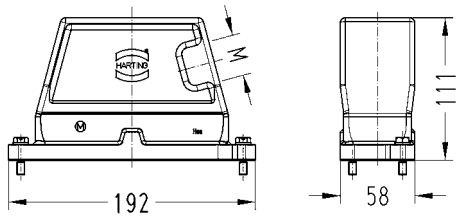
Han® HPR, Hoods, side entry, screw locking 	1xM32 1xM40 1xM50	19 40 024 0512 19 40 024 0513 19 40 024 0514	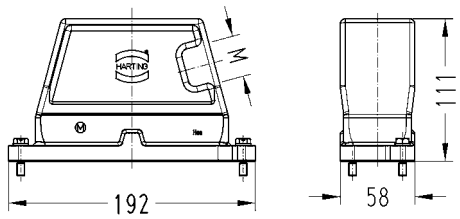
Han® HPR, Hoods, side entry, screw locking, high construction	2xM32	19 40 024 0537	
Han® HPR, Hoods, without cable entry, screw locking 		09 40 024 0811	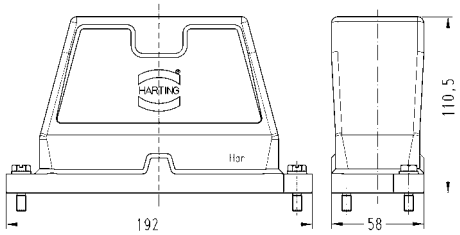

Identification	Cable entry	Part number	Drawing Dimensions in mm
Han® HPR, Protection cover for hoods, metal, toggle locking		09 40 024 5404	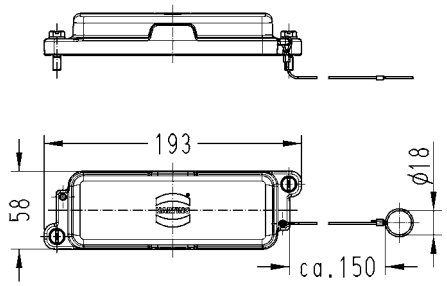
Han® HPR, Protection cover for hoods, metal, screw locking 		09 40 024 5414	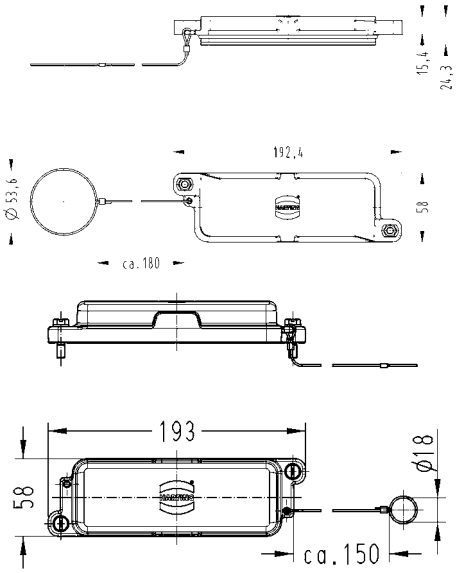
Han® HPR, Bulkhead mounted housings, toggle locking 		09 40 024 0301	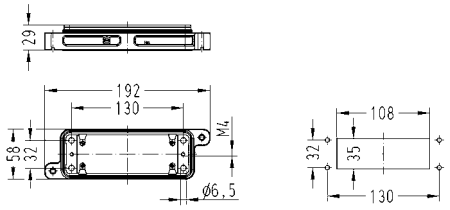
Han® HPR, Bulkhead mounted housings, screw locking 		09 40 024 0311	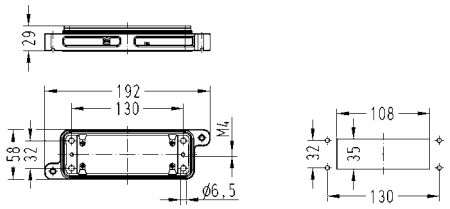

Identification	Cable entry	Part number	Drawing Dimensions in mm
Han® HPR, Bulkhead mounted housings, screw locking, with metal cover 		09 40 024 0317	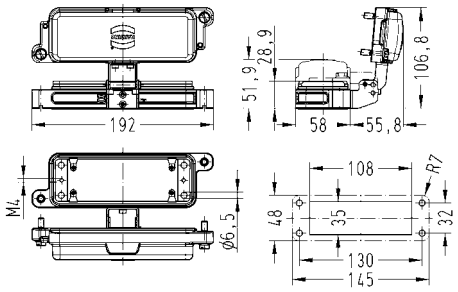
Han® HPR, Surface mounted housings, horizontal version, top entry, screw locking 	1xM50 3xM25 3xM25, 1xM20	19 40 024 0914 19 40 024 0931 19 40 024 0971	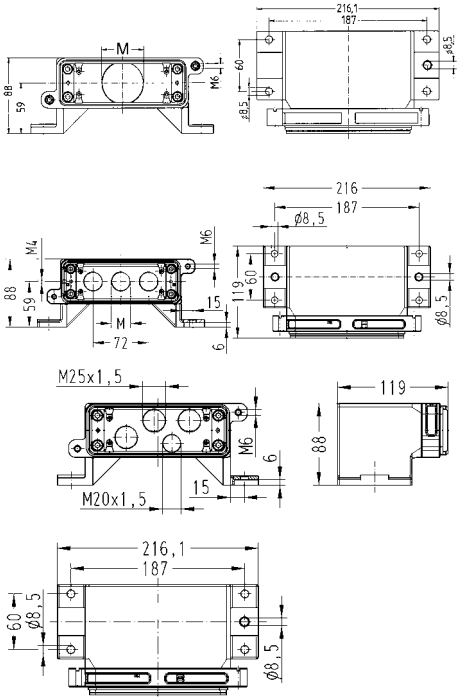
Han® HPR, Surface mounted housings, horizontal version, screw locking	3xM25	19 40 024 0941	

Identification	Cable entry	Part number	Drawing Dimensions in mm
Han® HPR, Surface mounted housings, side entry, screw locking	1xM40 2xM40 2xM50	19 40 024 1263 19 40 024 1273 19 40 024 1274	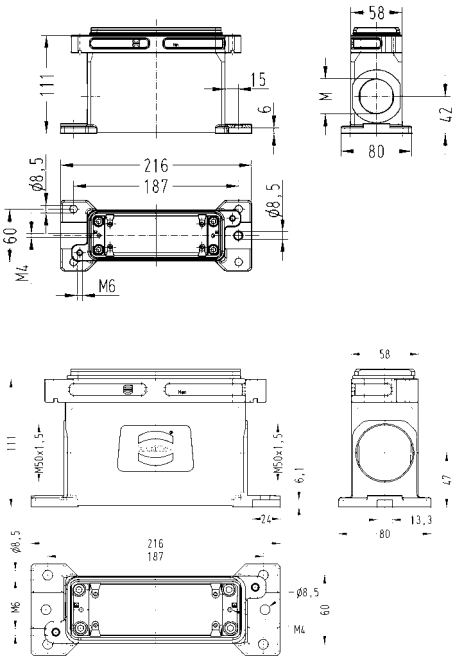
Han® HPR, Cover for housings, metal, toggle locking		09 40 024 5401	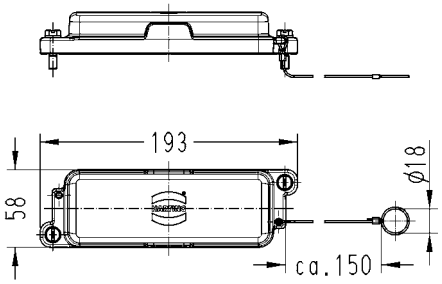
Han® HPR, Cover for housings, metal, screw locking		09 40 024 5411	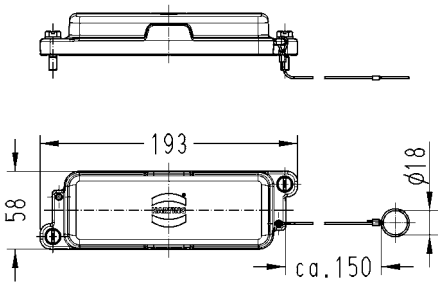
Han® HPR, Protection cover for housings, plastic		09 40 024 5406	
Han® HPR, Panel feed through housings, for mounting from inside, screw locking	1xM50	19 40 024 1114	

Identification	Cable entry	Part number	Drawing Dimensions in mm
Han® HPR, Panel feed through housings, for mounting from outside, screw locking	1xM50	19 40 024 1119	
Han® HPR, Mounting frames		09 40 000 9904	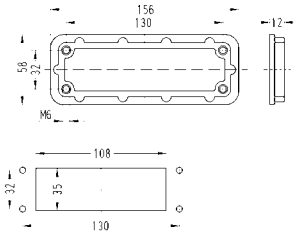 Panel cut out

Features

- Hoods/Housings for agressive environmental requirements

Technical characteristics

Limiting temperatures	-40 °C ... 125 °C
Flammability (locking lever) acc. to UL 94	V 0
Protection class acc. to UL 50	NEMA type 4/4X/12
Degree of protection acc. to IEC 60529	IP44 / IP67 is achieved with seal screw 09 20 000 9918, IP65 / IP67, IP65
Material (hoods/housings)	stainless steel
Surface (hoods/housings)	unpainted, powder-coated
Material (locking lever)	stainless steel
Material (seal)	NBR
Material (accessories)	NBR
Material (screwing)	stainless steel

Specifications and approvals

GL

Hoods/Housings for agressive environmental requirements
double locking lever

Identification	Cable entry	Part number	Drawing Dimensions in mm
Han-INOX®, Hoods, top entry, electrically conductive	1xM20	19 44 003 1440	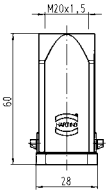
Han-INOX®, Hoods, side entry	1xM20	19 44 003 1640	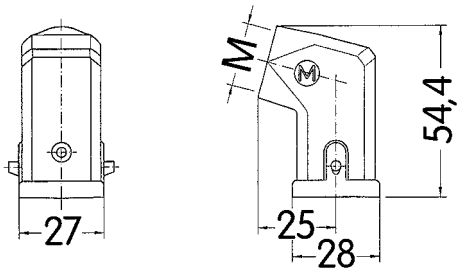
Han-INOX®, Protection cover for hoods, for mounted female insert or for mounted Han-Brid® insert, metal, with securing flex		19 44 003 5421	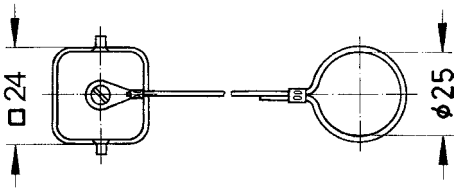
Han-INOX®, Protection cover for hoods, for mounted male insert or for mounted Han-Brid® insert, metal, with securing flex		19 44 003 5422	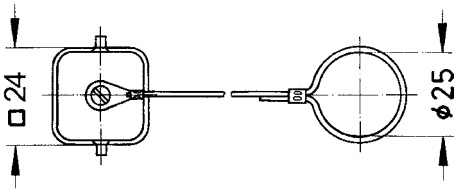

Identification	Cable entry	Part number	Drawing Dimensions in mm
Han-INOX®, Bulkhead mounted housings, straight 		19 44 003 0301	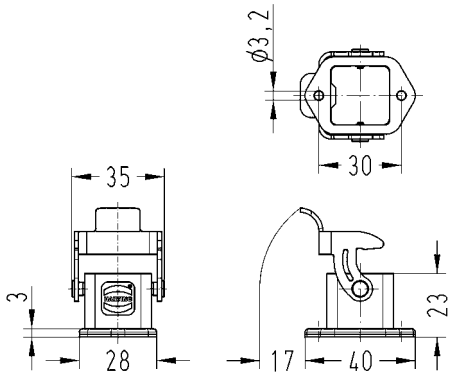 Panel cut out 22 x 22 mm
Han-INOX®, Bulkhead mounted housings, angled 		19 44 003 0801	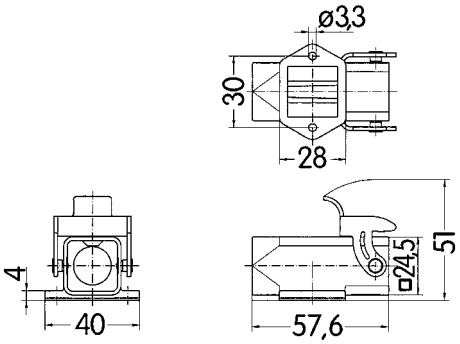 Panel cut out 22 x 22 mm
Han-INOX®, Surface mounted housings, side entry 	1xM20	19 44 003 1250	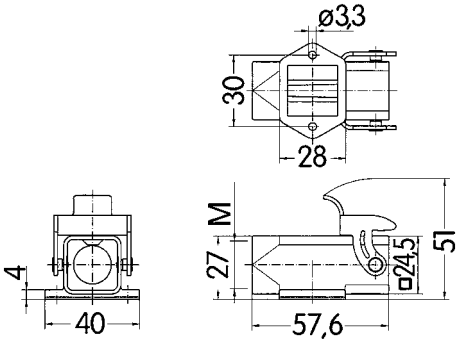
Han-INOX®, Protection cover for housings, for mounted female insert or for mounted Han-Brid® insert, metal, with securing flex 		19 44 003 5425	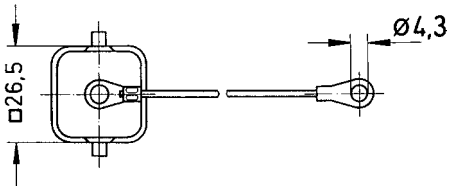

Identification	Cable entry	Part number	Drawing Dimensions in mm
Han-INOX®, Protection cover for housings, for mounted male insert or for mounted Han-Brid® insert, metal, with securing flex 		19 44 003 5426	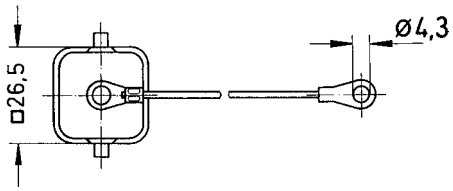
Han-INOX®, Screw mounted housings, top entry Range of delivery: 1x M20 stainless steel screw nut 	1xM20	19 44 003 1150	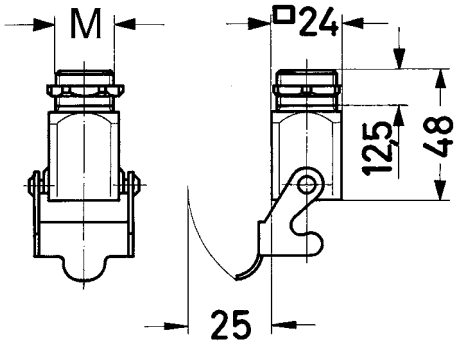

single locking lever

Identification	Cable entry	Part number	Drawing Dimensions in mm
Han-INOX®, Hoods, top entry	1xM32	19 44 310 0447	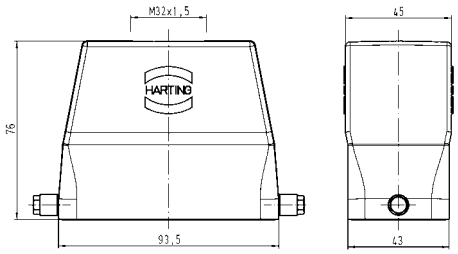
Han-INOX®, Hoods, side entry	1xM32	19 44 310 0547	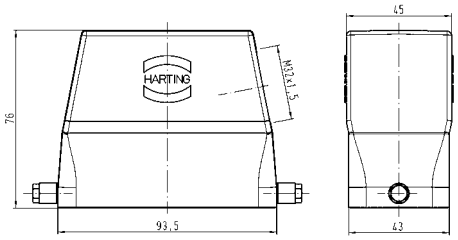
Han-INOX®, Protection cover for hoods, metal		19 44 310 5422	
Han-INOX®, Bulkhead mounted housings		19 44 310 0305	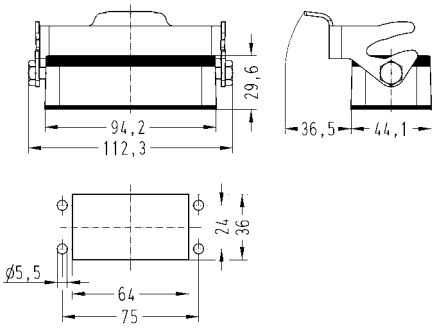 Panel cut out

Identification	Cable entry	Part number	Drawing Dimensions in mm
Han-INOX®, Bulkhead mounted housings, with protection cover		19 44 310 0303	
Han-INOX®, Protection cover for bulkhead mounted housings, metal		19 44 310 5421	
Han-INOX®, Cable to cable housings, top entry	1xM32	19 44 310 0757	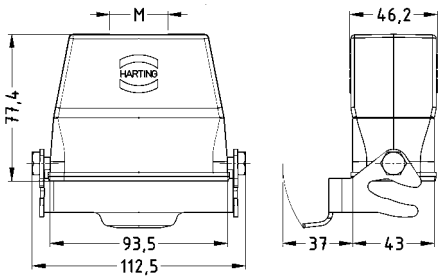
Han-INOX®, Flange gasket 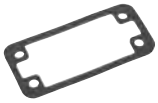		19 44 000 9902	

Photo courtesy: MAN Diesel & Turbo SE

HARTING Han® Hoods/Housings
for control of marine Diesel engines.

Contents | Page

Han D® crimp contacts **41.2**

Han E® crimp contacts **41.3**

Han A® screw termination **41.4**

Han E® screw termination **41.6**

Features

- Suitable for Han D® / DD® inserts
- Can be combined with standard crimp contacts in one connector if needed
- Iron and constantan contacts according to IEC 60584 type J
- According to EUROMAP 14, Part 1

Technical characteristics

Material (contact)	iron, constantan

Specifications and approvals

IEC 61984
IEC 60664-1

Details

Crimping tools see chapter 90

Remarks on the crimp technique

The wire gauges mentioned in the catalogue refer to geometric wire gauges of cables.

Identification	Wire cross section (mm²)	Part number male	Part number female	Drawing Dimensions in mm
Han D®, Crimp contact, iron, gold plated contacts, contact resistance ≤1 mOhm 	0.14 – 0.37	09 15 000 6171	09 15 000 6271	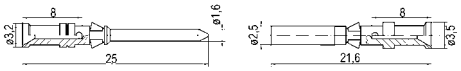 Identification acc. to IEC 60584 type J
Han D®, Crimp contact, constantan, not coated contacts, contact resistance ≤1 mOhm 	0.14 – 0.37	09 15 000 6161	09 15 000 6261	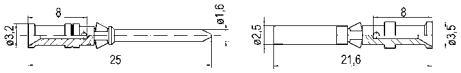 Identification acc. to IEC 60584 type J

Features

- Suitable for Han E®, Han® EE / EEE, Han® Q and Han A® inserts
- Can be combined with standard crimp contacts in one connector if needed
- Iron and constantan contacts according to IEC 60584 type J
- According to EUROMAP 14, Part 1

Technical characteristics

Material (contact)	constantan, iron

Specifications and approvals

IEC 61984
IEC 60664-1

Details

Crimping tools see chapter 90

Remarks on the crimp technique

The wire gauges mentioned in the catalogue refer to geometric wire gauges of cables.

Identification	Wire cross section (mm²)	Part number male	Part number female	Drawing Dimensions in mm
Han E®, Crimp contact, constantan, not coated contacts, contact resistance ≤1 mOhm 	0.14 – 0.37 0.5	09 33 000 6163 09 33 000 6162	09 33 000 6263 09 33 000 6262	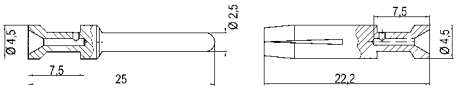 Identification acc. to IEC 60584 type J
Han E®, Crimp contact, iron, gold plated contacts, contact resistance ≤1 mOhm 	0.14 – 0.37 0.5	09 33 000 6173 09 33 000 6172	09 33 000 6273 09 33 000 6272	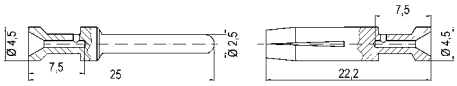 Identification acc. to IEC 60584 type J

Features

- Connector for temperature measurement conductors - Suitable for injection moulding machines
- Iron and constantan contacts according to IEC 60584 type J
- According to EUROMAP 14, Part 1

Technical characteristics

Contacts	16
Electrical data acc. to IEC 61984	**16 A 250 V 4 kV 3**
Rated current	16 A
Rated voltage	250 V
Rated impulse voltage	4 kV
Pollution degree	3
Rated voltage acc. to UL	600 V
Insulation resistance	≥10^{10} Ohm
Limiting temperatures	-40 °C ... 125 °C
Flammability (insert) acc. to UL 94	V 0
Mating cycles	≥500
Tightening torque	0.5 Nm
Material (insert)	polycarbonate
Colour (insert)	RAL 7032 (light grey)

Specifications and approvals

IEC 60664-1
IEC 61984

Number of contacts

16+ ⏚

250 V
16 A

Identification	Wire cross section (mm²)	Part number male	Part number female	Drawing Dimensions in mm
Han A®, Screw terminal	1 – 2.5	09 20 016 2691	09 20 016 2891	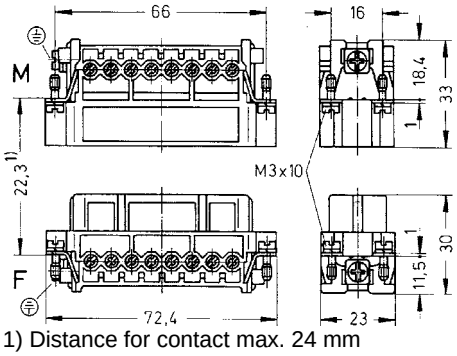 1) Distance for contact max. 24 mm 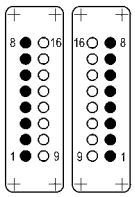 ◆ Fe ○ CuNi 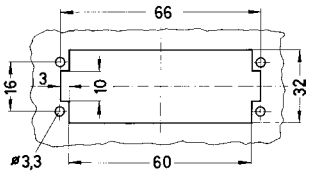 Panel cut out for inserts for use without hoods/housings

Features

- Connector for temperature measurement conductors - Suitable for injection moulding machines
- Iron and constantan contacts according to IEC 60584 type J
- According to EUROMAP 14, Part 1

Technical characteristics

Contacts	10, 16, 24
Electrical data acc. to IEC 61984	**16 A 400 V 6 kV 3**
Rated current	16 A
Rated voltage	400 V
Rated impulse voltage	6 kV
Pollution degree	3
Insulation resistance	≥10^{10} Ohm
Limiting temperatures	-40 °C ... 125 °C
Flammability (insert) acc. to UL 94	V 0
Mating cycles	≥500
Tightening torque	0.5 Nm
Material (insert)	polycarbonate
Colour (insert)	RAL 7032 (light grey)

Specifications and approvals

IEC 60664-1
IEC 61984

Number of contacts

10+ ⏚

400 V
16 A

Identification	Wire cross section (mm²)	Part number male	Part number female	Drawing Dimensions in mm
Han E®, Screw terminal, with wire protection 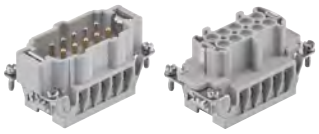	1 – 2.5	09 33 010 2691	09 33 010 2791	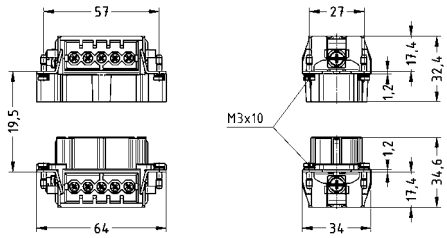 1) Distance for contact max. 21 mm 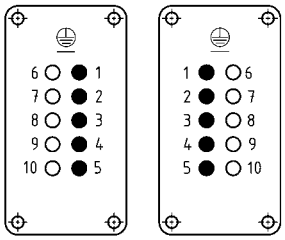 ◆ Fe ○ CuNi 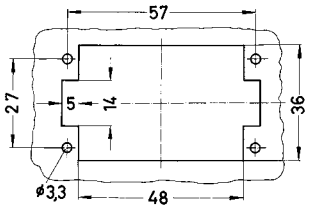 Panel cut out

Thermo-couple

Number of contacts

16+ ⏚

400 V
16 A

Identification	Wire cross section (mm²)	Part number male	Part number female	Drawing Dimensions in mm
Han E®, Screw terminal, with wire protection 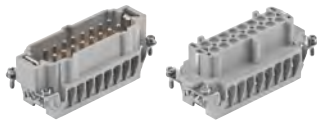	1 – 2.5	09 33 016 2691	09 33 016 2791	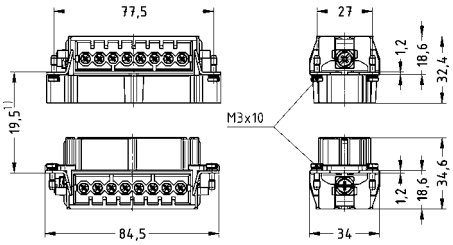 1) Distance for contact max. 21 mm 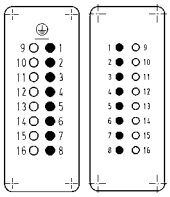 ◆ Fe ○ CuNi 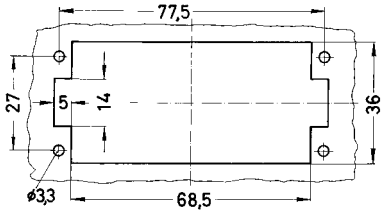 Panel cut out

Number of contacts

24+ ⏚

400 V
16 A

Identification	Wire cross section (mm²)	Part number male	Part number female	Drawing Dimensions in mm
Han E®, Screw terminal, with wire protection 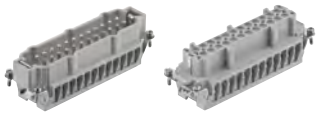 also suitable for standard contacts	1 – 2.5	09 33 024 2689	09 33 024 2789	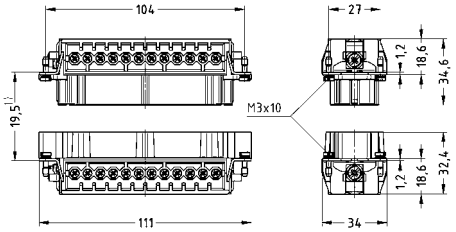 1) Distance for contact max. 21 mm 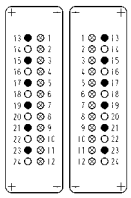 Standard contacts ◆ Fe ○ CuNi
Han E®, Screw terminal, with wire protection 	1 – 2.5	09 33 024 2691	09 33 024 2791	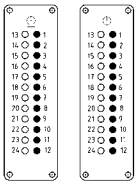 ◆ Fe ○ CuNi 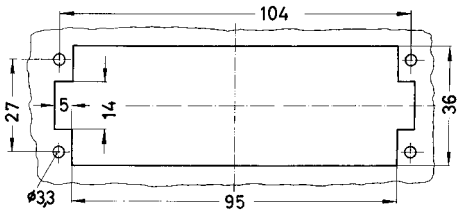 Panel cut out

Contents | Page

Modules **42.5**

Hoods/Housings **42.7**

Han® GND – Mateable Potential Equalization

The new Han® GND series now enables pluggable grounding systems.
Han® GND (Han® Ground) is the innovative HARTING solution for potential equalization. The new connector series makes it possible to execute grounding systems in a pluggable design for the first time.

The use of connectors has been well-established in the electrical cabling of machines and systems for many years. The advantage is quick and error-free commissioning. Potential equalization lines are still being permanently connected, which is relatively time-consuming and can be subject to errors. HARTING's remedy: the Han® GND. The single-pole connector in the robust IP65 plastic housing is designed for stranded wires from 10 - 35 mm² and is optionally available in crimp or axial screw termination. The latter has the advantage that the lines can be connected without a special tool. A simple screwdriver is all it takes to achieve a quick and easy reliable connection. Extra connector mating security can be provided by the use of additional locking elements that prevent unintentional opening.

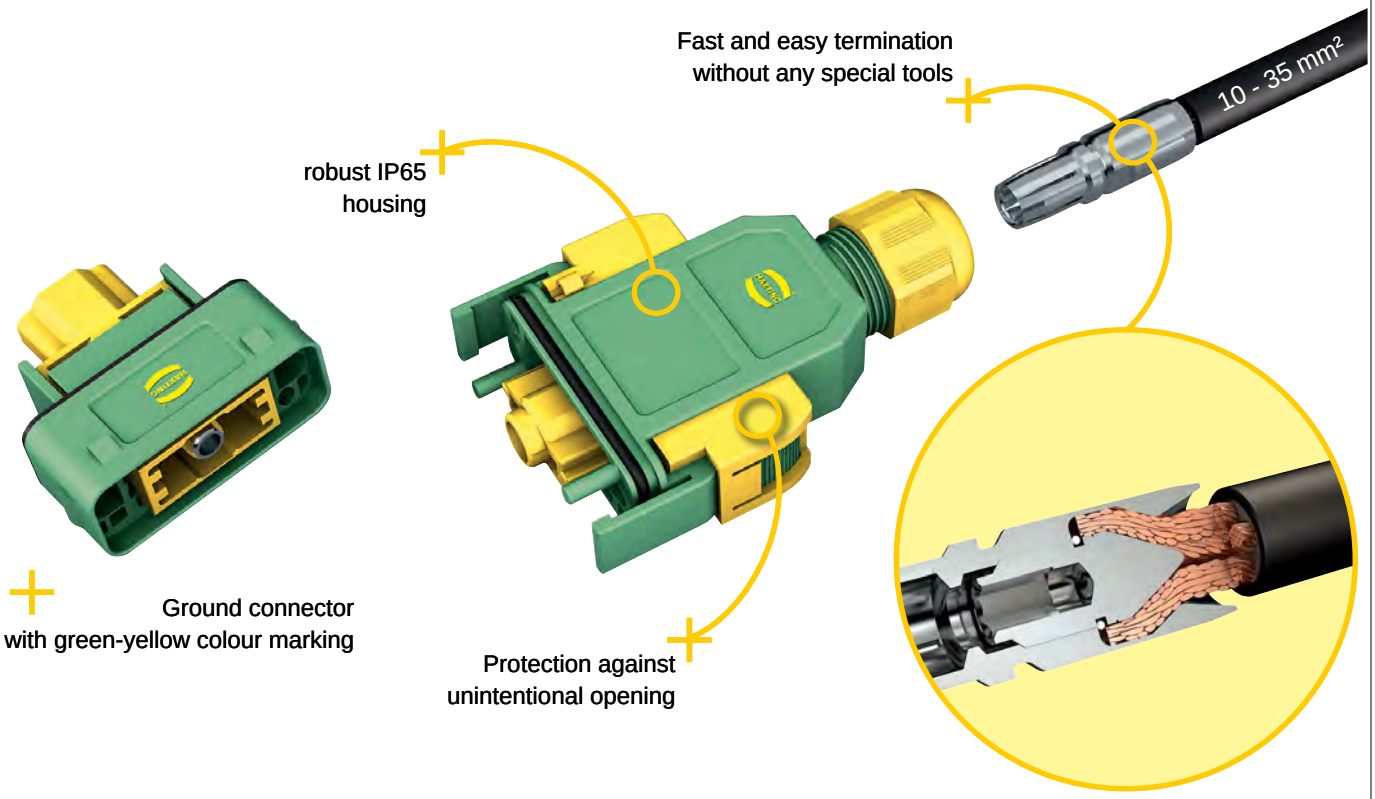

Assembly and construction

Assembly

Please use fine stranded wire (Class 5) which is recommend for the axial screw termination.

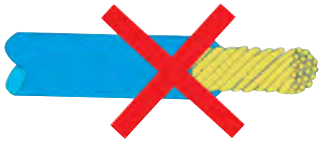

Do not twist the stripped wire!

1.

Please strip the wire. All suitable wire gauges have to be stripped with a length of 13 mm (acc. to Class 5).
Insert stripped wire into the terminal and push fully inside. Pay attention that all fine stranded wires are inserted in the contact chamber.

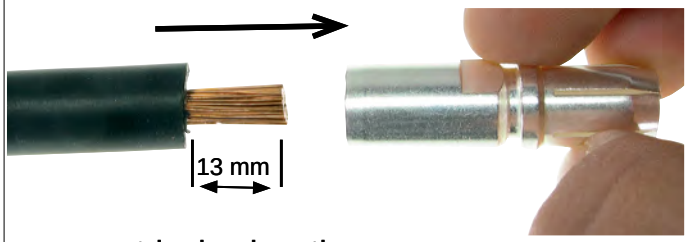

stripping length

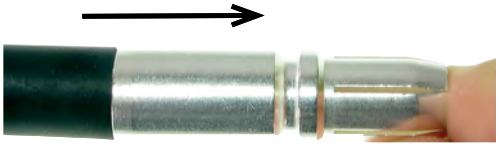

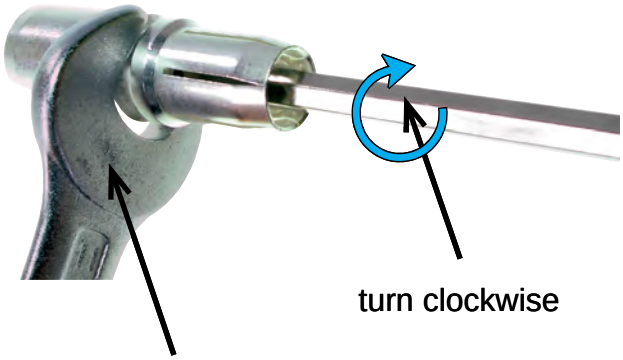

2.

Please insert suitable torque key (SW 4) into the contact from mating side and turn the axial screw clockwise. For that purpose secure the axial screw with a spanner (SW 11).
Tighten the screw to the specified torque value.

Assembly and construction

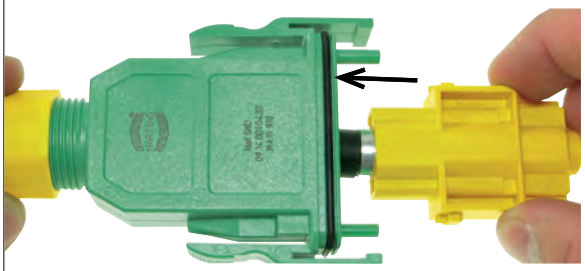

3. Insert the installed cable through the cable gland into the Han® GND housing!
Push the axial screw contact into the module until you hear an audible click, which is the indicator that the contact snaps into position.

4. Push the module back into the housing and turn the cable gland clockwise.

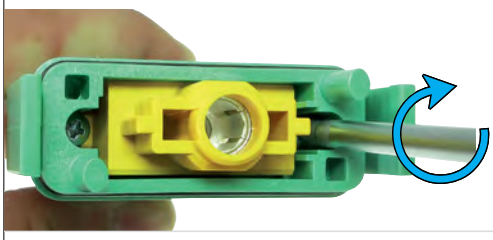

5. Mount the module in the housing with the enclosed screws.

Protection against unintentional opening (option)

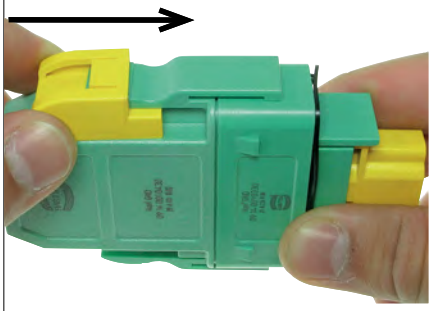

1. Push the unlocking protection over the opening latches to prevent an unintentional opening (the connector can only be unmated with a separate tool).

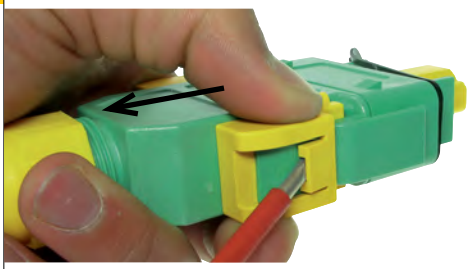

2. The removal of the unlocking protection can be done with a screwdriver for slotted screws (e.g. size 0.8 x 4.0). Insert the screwdriver in the unlocking protection slot and release the plastic latch until you are able to remove the unlocking protection with your fingers.

Features

- First connector for potential equalization
- Slim, space saving design
- Low cost plastic hoods and housings
- Colours: green and yellow
- Crimp or axial screw termination available

Technical characteristics

Contacts	1
Insulation resistance	≥10^{10} Ohm
Limiting temperatures	-40 °C ... 125 °C
Flammability (insert) acc. to UL 94	V 0
Mating cycles	≥500
Material (insert)	polycarbonate
Colour (insert)	yellow
Material (contact)	copper alloy
Hex key	SW 4

Specifications and approvals

IEC 60664-1
IEC 61984

Details

Crimping tools see chapter 90

Remarks on the axial screw technique

The wire gauges mentioned in the catalogue refer to geometric wire gauges of cables.

Remarks on the crimp technique

The wire gauges mentioned in the catalogue refer to geometric wire gauges of cables.

Number of contacts

1

Identification	Wire cross section (mm²)	Part number male	Part number female	Drawing Dimensions in mm
Han® GND, Han® GND module Please order contacts separately.		09 14 001 3032	09 14 001 3132	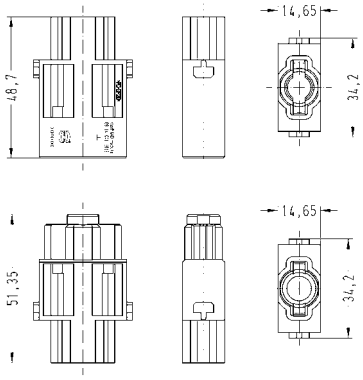
Crimp contact, TC 100, silver plated contacts, contact resistance ≤0.3 mOhm 	10 16 25 35	09 11 000 6114 09 11 000 6116 09 11 000 6125 09 11 000 6135	09 11 000 6214 09 11 000 6216 09 11 000 6225 09 11 000 6235	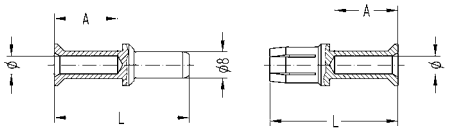 Wire gauge / ∅ / Stripping length A 10 mm² / 4.3 / 19 mm 16 mm² / 5.5 / 19 mm 25 mm² / 7 / 19 mm 35 mm² / 8.2 / 16 mm for stranded wire according to IEC 60 228 Class 5
Axial screw contact, silver plated contacts, contact resistance ≤0.3 mOhm 	10 – 25 16 – 35	09 11 000 6112 09 11 000 6113	09 11 000 6212 09 11 000 6213	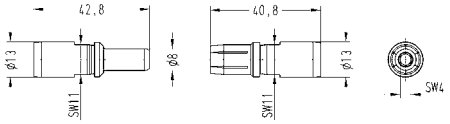 Stripping length 13 mm Tightening torque mm² / 10 / 16 / 25 / 35 Nm / 6 / 6 / 7 / 8

Features

- First connector for potential equalization
- Slim, space saving design
- Low cost plastic hoods and housings
- Colours: green and yellow

Technical characteristics

Limiting temperatures	-40 °C ... 85 °C
Flammability (hoods/housings) acc. to UL 94	V 0
Mating cycles	≥500
Degree of protection acc. to IEC 60529	IP65
Material (hoods/housings)	polycarbonate
Colour (hoods/housings)	green
Colour (locking lever)	yellow
Material (seal)	NBR
Material (screwing)	polyamide

Specifications and approvals

IEC 60664-1
IEC 61984

Identification	Clamping range (mm)	Part number	Drawing Dimensions in mm
Han® GND, Hoods, top entry	7.5 ... 14	09 14 001 0430	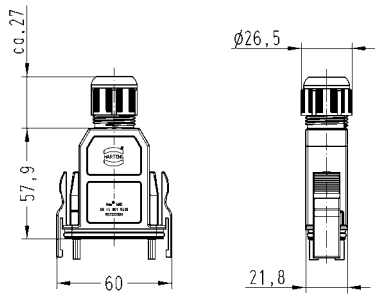
Han® GND, Bulkhead mounted housings		09 14 001 0330	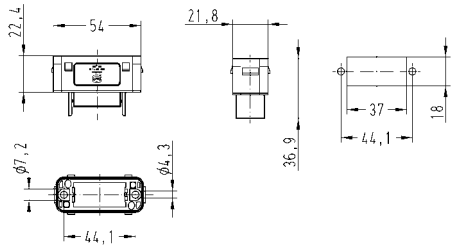
Han® GND, Cable to cable housings, top entry	7.5 ... 14	09 14 001 0730	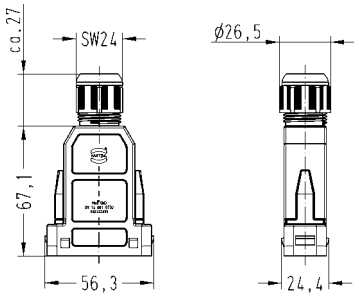
Han® GND, Adapter, male / male		09 14 001 9901	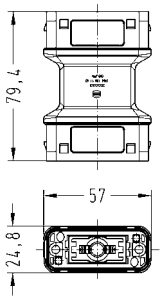

Identification	Clamping range (mm)	Part number	Drawing Dimensions in mm
Han® GND, Unlocking protection 		09 14 000 9938	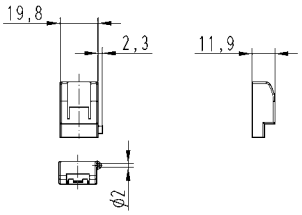

Contents | Page

D-Sub adapter	**80.2**
Locking levers	**80.7**
Seals	**80.8**
Han® Hood Link	**80.10**
Panel feed through housings	**80.11**
Accessories for flat cable	**80.14**
Cable glands	**80.15**
Shielding frame	**80.20**
Grip frames	**80.22**
Coding of inserts in hoods/housings	**80.24**
Han® Docking frame	**80.27**
PE Multiple ground connection	**80.28**
Straight cable clamp fitting	**80.29**
Special insert fixing screws	**80.30**
Screws	**80.31**
Bearing pedestal and covers	**80.33**
Further accessories	**80.34**

Number of contacts

9,15,25,37

Technical characteristics

Contacts	15, 25, 9, 37
Limiting temperatures	-40 °C ... 125 °C
Flammability (insert) acc. to UL 94	V 0
Mating cycles	≥500

Technical characteristics

Material (accessories)	plastic, metal

Details

only for standard D-Sub, not for HD D-Sub

Identification	Size	Part number	Drawing Dimensions in mm
Adapter, for 1 x D-Sub, plastic Range of delivery: 1 adapter, 4 fixing srcews for adapter, 2 fixing srcews for D-Sub connector	9 15 25	09 20 000 9932 09 20 000 9928 09 20 000 9929	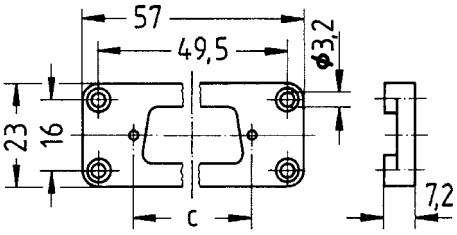 D-Sub 15 c= 33.3 mm D-Sub 25 c= 47 mm 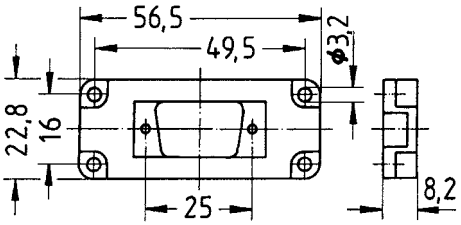 D-Sub 9
Adapter, for 1 x D-Sub, metal Range of delivery: two-piece adapter, 2 fixing srcews for adapter, 2 fixing srcews for D-Sub connector size 25 in the Han 10 A size 37 in the Han 16 A	25 37	09 20 000 9925	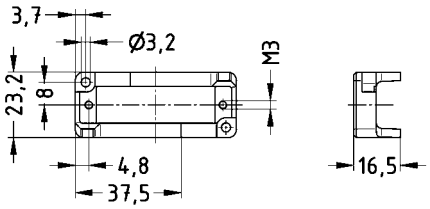

Number of contacts

25,37,50

Technical characteristics

Contacts	50, 25, 37
Limiting temperatures	-40 °C ... 125 °C
Flammability (insert) acc. to UL 94	V 0
Mating cycles	≥500

Technical characteristics

Material (accessories)	plastic, metal

Details

only for standard D-Sub, not for HD D-Sub

Identification	Size	Part number	Drawing Dimensions in mm
Adapter, for 1 x D-Sub Range of delivery: 1 adapter, 4 fixing srcews for adapter, 2 fixing srcews for D-Sub connector	50	09 20 000 9931	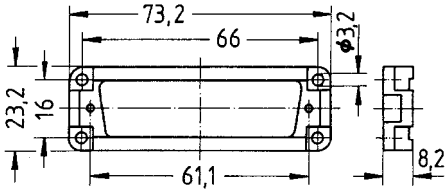
Adapter, for 1 x D-Sub, metal Range of delivery: two-piece adapter, 2 fixing srcews for adapter, 2 fixing srcews for D-Sub connector size 25 in the Han 10 A size 37 in the Han 16 A	25 37	09 20 000 9925	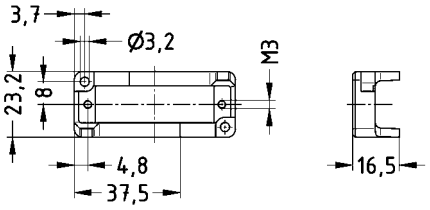

Number of contacts

9,15

Technical characteristics

Contacts	9, 15
Limiting temperatures	-40 °C ... 125 °C
Flammability (insert) acc. to UL 94	V 0
Material (accessories)	plastic

Details

only for standard D-Sub, not for HD D-Sub

Identification	Size	Part number	Drawing Dimensions in mm
Adapter, for 1 x D-Sub Range of delivery: 1 adapter, 4 fixing srcews for adapter, 2 fixing srcews for D-Sub connector	9 15	09 30 000 9965 09 30 000 9966	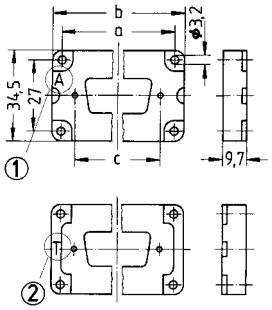 ① Mounting in housing: character **A** visible ② Mounting in hood: character **T** visible D-Sub 9: a=44; b=51.5; c=25 D-Sub 15: a=44; b=51.5; c=33.3
Adapter, for 2 x D-Sub Range of delivery: 1 adapter, 4 fixing srcews for adapter, 4 fixing screws for D-Sub connector	9 15	09 30 000 9970 09 30 000 9971	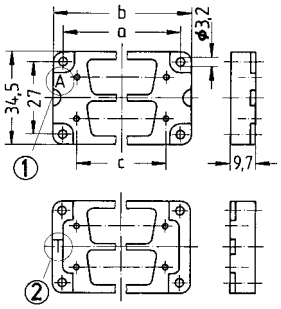 ① Mounting in housing: character **A** visible ② Mounting in hood: character **T** visible D-Sub 2x 9: a=44; b=51.5; c=25 D-Sub 2x 15: a=44; b=51.5; c=33.3

Number of contacts

25

Technical characteristics

Contacts	25
Limiting temperatures	-40 °C ... 125 °C
Flammability (insert) acc. to UL 94	V 0
Material (accessories)	plastic

Details

only for standard D-Sub, not for HD D-Sub

Identification	Size	Part number	Drawing Dimensions in mm
Adapter, for 1 x D-Sub Range of delivery: 1 adapter, 4 fixing srcews for adapter, 2 fixing srcews for D-Sub connector	25	09 30 000 9967	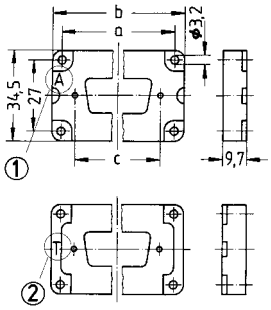 ① Mounting in housing: character **A** visible ② Mounting in hood: character **T** visible D-Sub 25: a=57; b=64.5; c=47
Adapter, for 2 x D-Sub Range of delivery: 1 adapter, 4 fixing srcews for adapter, 4 fixing screws for D-Sub connector	25	09 30 000 9972	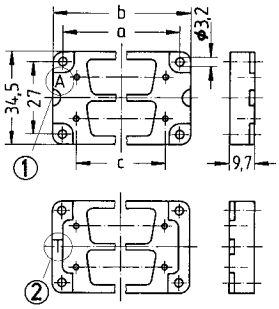 ① Mounting in housing: character **A** visible ② Mounting in hood: character **T** visible D-Sub 2x 25: a=57; b=64.5; c=47

Number of contacts

37,50

Technical characteristics

Contacts	37, 50
Limiting temperatures	-40 °C ... 125 °C
Flammability (insert) acc. to UL 94	V 0
Material (accessories)	plastic

Details

only for standard D-Sub, not for HD D-Sub

Identification	Size	Part number	Drawing Dimensions in mm
Adapter, for 1 x D-Sub Range of delivery: 1 adapter, 4 fixing srcews for adapter, 2 fixing srcews for D-Sub connector	37 50	09 30 000 9968 09 30 000 9969	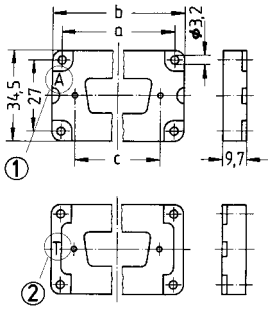 ① Mounting in housing: character **A** visible ② Mounting in hood: character **T** visible D-Sub 37: a=77.5; b=85; c=63.5 D-Sub 50: a=77.5; b=85; c=61.1
Adapter, for 2 x D-Sub Range of delivery: 1 adapter, 4 fixing srcews for adapter, 4 fixing screws for D-Sub connector	37 50	09 30 000 9973 09 30 000 9974	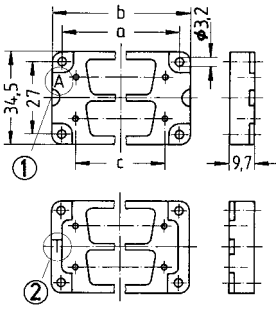 ① Mounting in housing: character **A** visible ② Mounting in hood: character **T** visible D-Sub 2x 37: a=77.5; b=85; c=63.5 D-Sub 2x 50: a=77.5; b=85; c=61.1

Technical characteristics

Material (accessories)	plastic, polycarbonate + stainless steel

Technical characteristics

Colour (accessories)	RAL 7032 (light grey), black, grey

Identification	Size	Part number	Drawing Dimensions in mm
Locking lever, double locking lever, light grey	3 A	09 00 000 5241	
Locking lever, double locking lever, black	3 A	09 00 000 5242	
Locking lever, single locking lever, Han® Q 8/0, black		09 00 000 5244	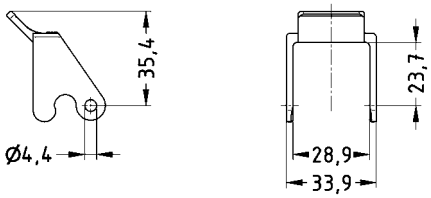
Locking lever, single locking lever, black	10/16/24 B 6 B	09 00 000 5246 09 00 000 5401	
Han-Easy Lock®, Locking lever, single locking lever, grey	6 B 10 A 16 A 10 B 16 B 24 B	09 00 000 5222 09 00 000 5224 09 00 000 5225 09 00 000 5228 09 00 000 5229 09 00 000 5230	
Han-Easy Lock®, Locking lever, double locking lever, grey	10/16/24 B 32 A 32 B	09 00 000 5221 09 00 000 5223 09 00 000 5231	

Technical characteristics

Material (accessories)	NBR, FPM

Identification	Size	Part number	Drawing Dimensions in mm
Flange gasket 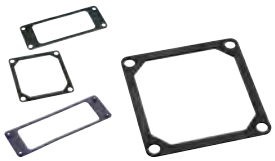	Modular Compact	09 14 000 9940	
	3 A	09 20 000 9991	
	10 A	09 20 000 9992	
	16 A	09 20 000 9993	
	32 A	09 20 000 9994	
	3 HPR	09 40 000 9980	
	Han-Drive®	09 30 000 9903	
	6 B	09 30 000 9801	
	10 B	09 30 000 9802	
	16 B	09 30 000 9803	
	24 B	09 30 000 9804	
	48 HPR	09 30 000 9996	
Flange gasket, FPM	3 A	09 37 000 9912	
	6 B	09 37 000 9946	
	10 B	09 37 000 9947	
	16 B	09 37 000 9948	
	24 B	09 37 000 9949	

Technical characteristics

Material (accessories) NBR, FPM

Identification	Size	Part number	Drawing Dimensions in mm
Han® HPR, O-ring-seal	3 HPR 6 HPR 10 HPR 16 HPR 24 HPR	09 40 000 9910 09 40 000 9911 09 40 000 9912 09 40 000 9913 09 40 000 9914	
L-seal, for cable to cable housings	24 B 16 B 10 B 6 B	09 30 000 9933 09 30 000 9934 09 30 000 9935 09 30 000 9936	
Profile gasket	10 A 16 A 6 B 10 B 16 B 24 B 32 B 48 B 3 A	09 20 000 9996 09 20 000 9997 09 30 000 9941 09 30 000 9942 09 30 000 9943 09 30 000 9944 09 30 000 9963 09 30 000 9995 09 70 000 9991	
Profile gasket, FPM	3 A	09 21 000 9906	

Han® Hood Link

Features

- Cable to cable connection simple to realize and easy to mount
- Resistant elastomer
- Locking as well as seal combined in one system
- For two lever locking system

Technical characteristics

Limiting temperatures	-40 °C ... 85 °C
Degree of protection acc. to IEC 60529	IP65 in locked position
Colour (hoods/housings)	black

Identification	Size	Part number	Drawing Dimensions in mm
Locking element, for hoods	16 B	09 30 016 9901	

Panel feed through housings

double locking lever

Features

- Allows the entry of pre-assembled cables into a switch cabinet
- Use of identification strips is possible
- No special tools required
- Standard screw driver (5 x 1 mm) necessary to open split hood
- IP54 due to continuos contoured sealing

Technical characteristics

Limiting temperatures	-40 °C ... 125 °C
Flammability (hoods/housings) acc. to UL 94	V 0
Locking cycles of bulkhead mounted housings	≥50
Locking cycles of splitt hood halves	≥10
Flammability (locking lever) acc. to UL 94	V 0
Protection class acc. to UL 50	NEMA type 4/4X/12
Degree of protection acc. to IEC 60529	IP54 when mounted vertically in the longitudinal direction, IP65
Material (hoods/housings)	polycarbonate
Material (locking lever)	polycarbonate + stainless steel
Colour (locking lever)	RAL 7037 (grey)

Identification	Cable entry	Part number	Drawing Dimensions in mm
Panel feed through housings, Han-Easy Lock® Range of delivery: 2 split hood halves Please order cable entry glands separately.	3 4	09 30 016 0408 09 30 024 0408	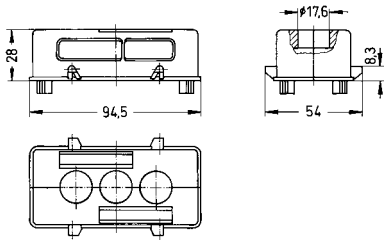 09 30 016 0301 Han® 16 B Housings bulkhead mounting see chapter 31 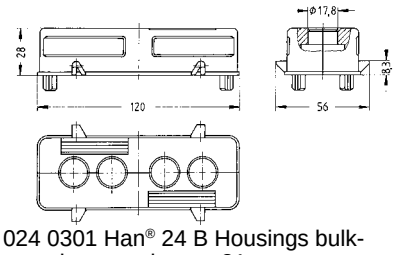 09 30 024 0301 Han® 24 B Housings bulkhead mounting see chapter 31

Identification	Cable entry	Part number	Drawing Dimensions in mm
Identification strip Range of delivery: single 		09 33 000 9981	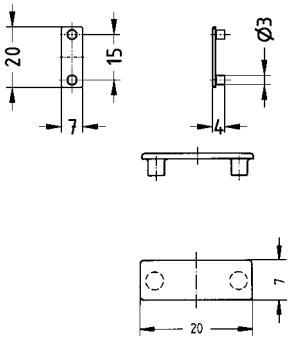

Technical characteristics

Limiting temperatures	-40 °C ... 125 °C

Technical characteristics

Material (accessories)	plastic, thermoplastic rubber
Colour (accessories)	black

Identification	Clamping range (mm)	Part number	Drawing Dimensions in mm
Blind grommet		09 00 000 5350	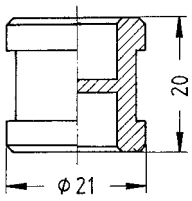
Cable entry gland, for ASI cable		09 00 000 5364	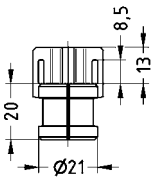
Cable entry gland, additional strain relief can be provided by cable ties (max. width 8 mm)	10 ... 11 11 ... 12 12 ... 13 13 ... 14 14 ... 15 15 ... 16	09 00 000 5358 09 00 000 5359 09 00 000 5360 09 00 000 5361 09 00 000 5362 09 00 000 5363	
Cable entry gland 	3 ... 4 4 ... 5 5 ... 6 6 ... 7 7 ... 8 8 ... 9 9 ... 10	09 00 000 5351 09 00 000 5352 09 00 000 5353 09 00 000 5354 09 00 000 5355 09 00 000 5356 09 00 000 5357	

Identification	Part number	Drawing Dimensions in mm
Set of seals, with strain relief clamp, for 1 flat cable	09 00 000 5315	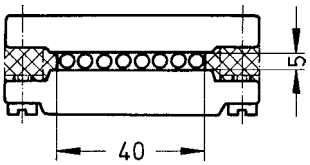
Set of seals, with strain relief clamp, for 2 flat cables	09 00 000 5316	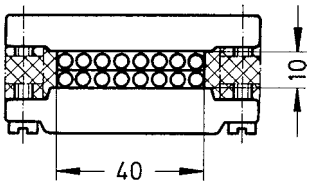
Set of seals, with strain relief clamp, for 3 flat cables	09 00 000 5317	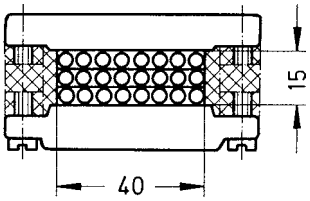
Bracket for flat cable, for separate mounting	09 00 000 5325	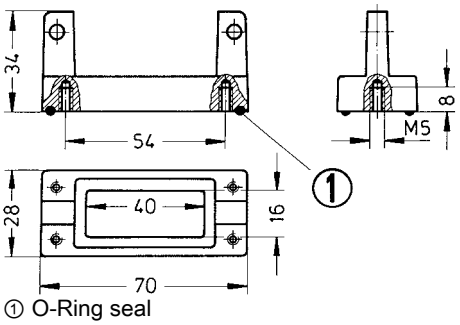 ① O-Ring seal

Technical characteristics

Tightening torque	5 Nm 4.5 Nm 6.5 Nm 10 Nm

Technical characteristics

Degree of protection acc. to IEC 60529	IP68
Colour (accessories)	RAL 7032 (light grey)
Material (screwing)	thermoplastic

Identification	Clamping range (mm)	Size	Part number
Cable gland	5 ... 9	M20	19 00 000 5180
	6 ... 12	M20	19 00 000 5182
	10 ... 14	M20	19 00 000 5184
	9 ... 16	M25	19 00 000 5190
	13 ... 18	M25	19 00 000 5192
	13 ... 20	M32	19 00 000 5194
	18 ... 25	M32	19 00 000 5196
	20 ... 26	M40	19 00 000 5197
	22 ... 32	M40	19 00 000 5198

Drawing
Dimensions in mm

Outer cable Ø	SW	E	Nm
5 ... 9 mm	24	26.4	4.5
6 ... 12 mm	24	26.4	4.5
10 ... 14 mm	27	29.8	4.5
9 ... 16 mm	33	33.5	5
13 ... 18 mm	33	36.5	5
13 ... 20 mm	42	46.8	6.5
18 ... 25 mm	42	46.8	6.5
20 ... 26 mm	53	58.8	10
22 ... 32 mm	53	58.8	10

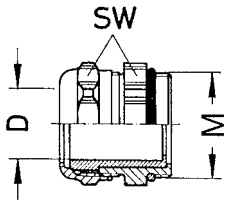

Technical characteristics

Tightening torque	10 Nm 12 Nm 15 Nm 24 Nm

Technical characteristics

Degree of protection acc. to IEC 60529	IP68
Material (screwing)	metal

Identification	Clamping range (mm)	Size	Part number	Drawing Dimensions in mm
Cable gland, metal	5 ... 9	M20	19 00 000 5080	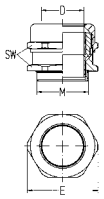
	5 ... 12	M20	19 00 000 5081	
	6 ... 12	M20	19 00 000 5082	
	10 ... 14	M20	19 00 000 5084	
	9 ... 16	M25	19 00 000 5090	
	9 ... 18	M25	19 00 000 5091	
	13 ... 18	M25	19 00 000 5092	
	13 ... 20	M32	19 00 000 5094	
	13 ... 25	M32	19 00 000 5095	
	18 ... 25	M32	19 00 000 5096	
	20 ... 26	M40	19 00 000 5097	
	22 ... 32	M40	19 00 000 5098	
	20 ... 32	M40	19 00 000 5099	
	32 ... 38	M50	19 00 000 5086	

Outer cable Ø	SW	E	Nm
5 ... 9 mm	22	24.4	10
5 ... 12 mm	22	24.4	10
6 ... 12 mm	22	24.4	10
10 ... 14 mm	24	26.4	10
9 ... 16 mm	30	33.5	12
9 ... 18 mm	30	33.5	12
13 ... 18 mm	30	33.5	12
13 ... 20 mm	40	44	15
13 ... 25 mm	40	44	15
18 ... 25 mm	40	44	15
20 ... 26 mm	50	55	15
22 ... 32 mm	50	55	15
20 ... 32 mm	50	55	15
32 ... 38 mm	57	60	24

Technical characteristics

Degree of protection acc. to IEC 60529 IP68

Technical characteristics

Material (screwing) metal

Identification	Clamping range (mm)	Size	Part number
EMC clamp	6.5 ... 9.5	M20	19 62 000 5080
	7 ... 10.5	M20	19 62 000 5082
	9 ... 13	M20	19 62 000 5084
	4 ... 6.5	M20	19 62 000 5081
	6.5 ... 9.5	M25	19 62 000 5090
	9 ... 13	M25	19 62 000 5092
	11.5 ... 15.5	M32	19 62 000 5094
	14 ... 18	M32	19 62 000 5096
	17 ... 20.5	M40	19 62 000 5097
	20 ... 25	M40	19 62 000 5098

Drawing
Dimensions in mm

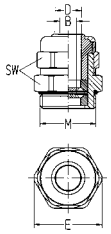

cable-Ø D	SW	E	shield-Ø B
6.5 ... 9.5	22	24.4	3,5 ... 8,5
4 ... 6.5	22	24.4	2,5 ... 6,5
7 ... 10.5	22	24.4	6,5 ... 10,5
9 ... 13	22	24.4	6,5 ... 10,5
6.5 ... 9.5	22	31.2	3 ... 8
9 ... 13	28	31.2	4,8 ... 8
11.5 ... 15.5	35	38.5	8 ... 13,5
14 ... 18	35	38.5	9 ... 14,5
17 ... 20.5	43	47.3	15 ... 20
20 ... 25	43	47.3	15 ... 20

Technical characteristics

Limiting temperatures	-40 °C ... 125 °C
Flammability (insert) acc. to UL 94	V 0

Technical characteristics

Degree of protection acc. to IEC 60529	IP68
Material (accessories)	plastic
Colour (accessories)	black
Material (screwing)	thermoplastic, metal

Identification	Size	Reducers	Part number	Drawing Dimensions in mm
Blind grommet, plastic	M32 M40		19 00 000 5172 19 00 000 5173	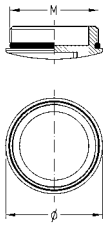 M32: Ø 35 mm M40: Ø 46.2 mm
Blind grommet, metal	M20 M25 M32 M40		19 00 000 5070 19 00 000 5071 19 00 000 5072 19 00 000 5073	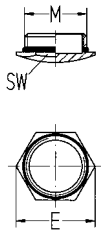 M20: SW 22; E 25.4 M25: SW 28; E 32.3 M32: SW 35; E 40.4 M40: SW 44; E 50.8
Reducer	M20 M32 M32	M16 M20 M25	19 00 000 5060 19 00 000 5067 19 00 000 5068	
Reducer, with O-ring	M32 M32	M20 M25	19 00 000 5066 19 00 000 5069	

Identification	Size	Reducers	Part number	Drawing Dimensions in mm
Han-Eco®, Reduction sealing insert 	M32		19 41 000 5132	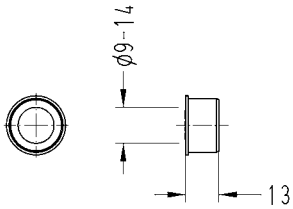
Han A® , Adapter, for motor connection 	M20		19 20 000 9962	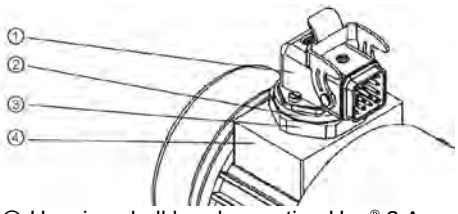 ① Housings bulkhead mounting Han® 3 A ② Seal ③ Adapter Han® 3 A ④ housing for motor applications 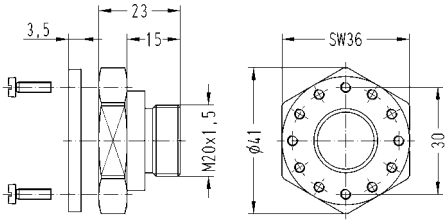

Technical characteristics

Material (accessories) steel, zinc plated

Identification	Size	Part number	Drawing Dimensions in mm
Han-Modular®, PE terminal, for housings bulkhead mounting	24 B	09 00 000 5209	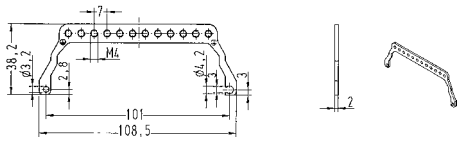
Clamp, for shield frames		09 00 000 5341 09 00 000 5342	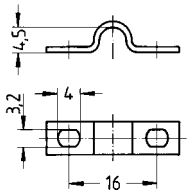 Cable diameter 5 mm 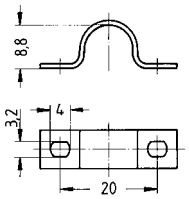 Cable diameter 10 mm
Han E®, Han® EE, Han DD®, Han-Snap®, Shielding frame, for housings bulkhead mounting and hoods high construction Range of delivery: Ground terminal frame with M4 screws for fixing at insert	6 B 10 B 16 B	09 00 000 5206 09 00 000 5207 09 00 000 5208	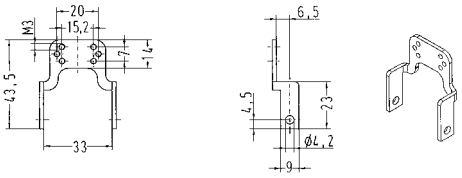 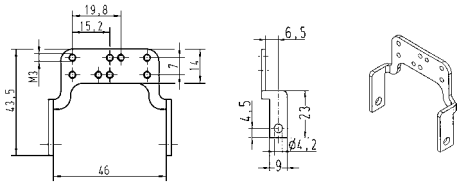 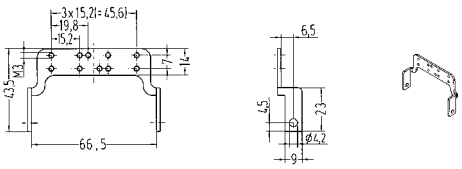

Shielding frame

Identification	Size	Part number	Drawing Dimensions in mm
Han E®, Han® EE, Han DD®, Han-Snap®, Shielding frame, for housings bulkhead mounting and hoods high construction, 24 B Range of delivery: Ground terminal frame with M4 screws for fixing at insert	24 B 24 B	09 00 000 5210 09 00 000 5280	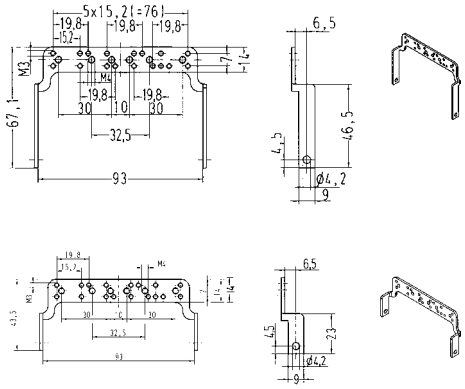
Han-Modular®, Shielding frame, for housings bulkhead mounting	24 B 6 B 10 B 16 B	09 00 000 5211 09 00 000 5256 09 00 000 5257 09 00 000 5258	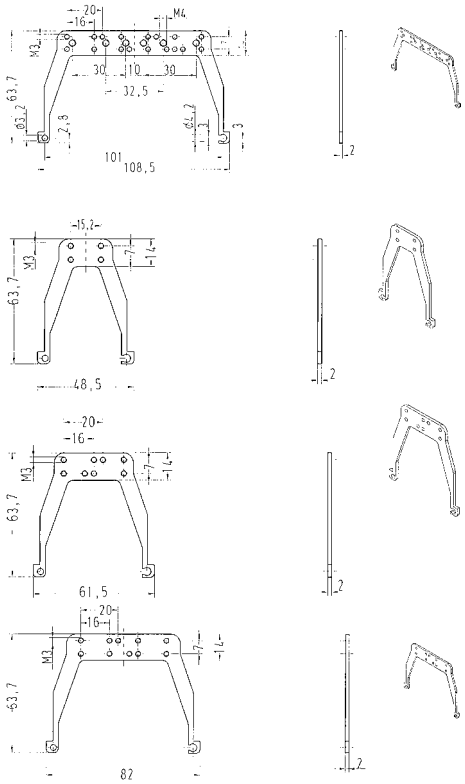
Han-Modular®, Shielding frame, for housings bulkhead mounting and hoods high construction	24 B	09 00 000 5298	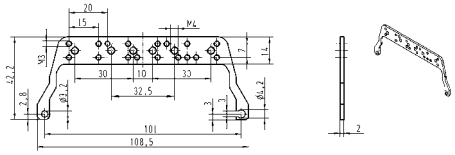
Han-Quintax®, Shielding frame, for housings bulkhead mounting and hoods high construction	24 B	09 00 000 5235	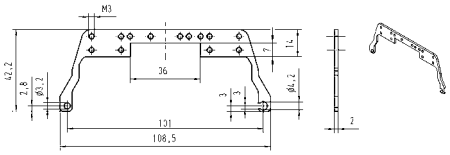

Acces-
sories

Features

- Grip frame suitable for Han® 64 D / Han® 108 DD / Han® 24 E / Han® 24 ES / Han® 24 ESS / Han® 46 EE
- Multiple shield connections via grip frame
- Cable can be fixed with clamps or cable tie

Technical characteristics

Material (accessories)	zinc die-cast

Details

The grip frame can be used for termination of several shielded cables to be fixed on one connector.

Identification	Size	Part number	Drawing Dimensions in mm
Screw adapter, bulkhead mounting		09 00 000 5603	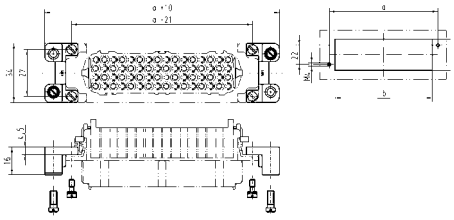 a, b 6 B: 65, 52 10 B: 78, 65 16 B: 98,5, 85,5 24 B: 125, 112
Screw adapter, bulkhead mounting to use in connection 09 00 024 5611		09 00 000 5602	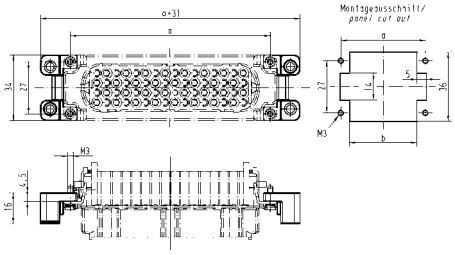 a, b 6 B: 44, 35 10 B: 57, 48 16 B: 77,5, 68,5 24 B: 104, 95

Grip frames

Identification	Size	Part number	Drawing Dimensions in mm
Grip frame, metal	16 B 24 B	09 00 016 5603 09 00 024 5601	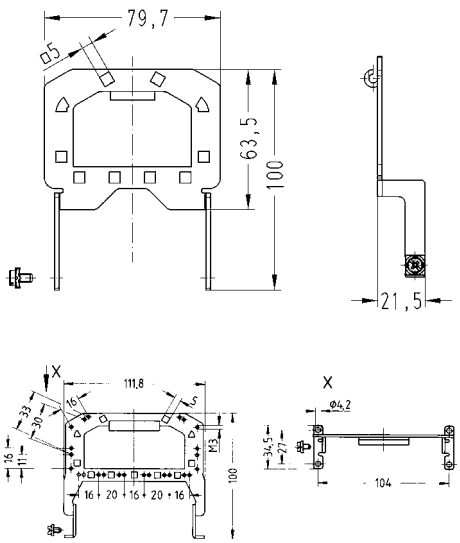
Grip frame, metal, with screw adapter and screw to use in connection with 09 00 000 5602	24 B	09 00 024 5611	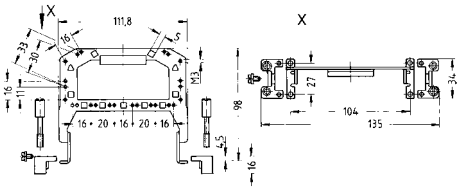

Coding of inserts in hoods/housings

Identification	Part number male	Part number female	Drawing Dimensions in mm
standard, Coding system with guide pins/bushes, for application “insert with screw adapter” with/ without grip frame Please order 4 pieces for one connector	09 33 000 9808	09 33 000 9809	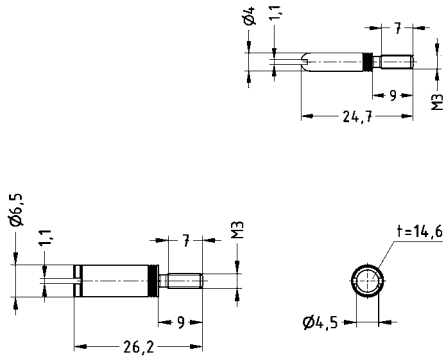
standard, Coding system with guide pins/bushes, for application “insert in hood/housing” Please order 4 pieces for one connector	09 33 000 9908	09 33 000 9909	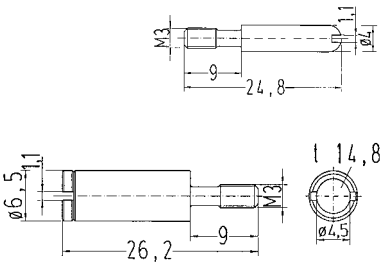
Han-Modular®, Coding system with guide pins/bushes, for application “insert in hood/housing” 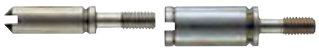 Please order 4 pieces for one connector	09 14 000 9908	09 14 000 9909	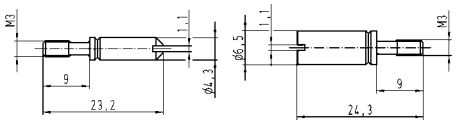 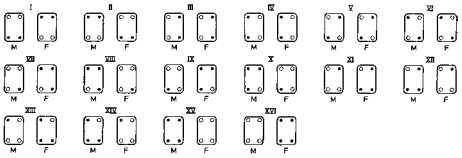 for hoods/housings with one insert/one frame 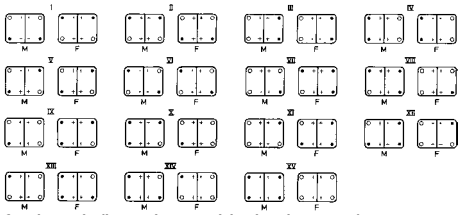 for hoods/housings with tho inserts/two frames ◆ Guide pin ○ Bush + Normal mounting screw M - Male insert F - Female insert

Coding of inserts in hoods/housings

Identification	Part number	Drawing Dimensions in mm
standard, Coding system with code pins Please order 4 pieces for one connector	09 30 000 9901	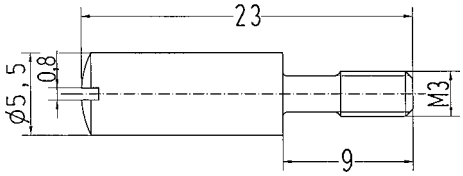
Han-Modular®, Coding system with code pins Please order 4 pieces for one connector	09 14 000 9901	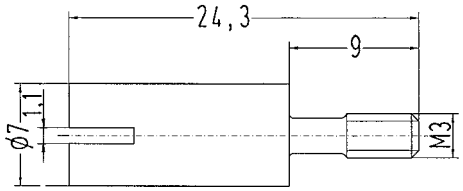 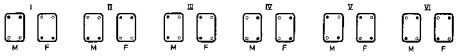 for hoods/housings with one insert/one frame 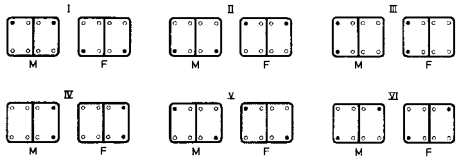 for hoods/housings with tho inserts/two frames ◆ Code pin + Normal mounting screw M - Male insert F - Female insert

Acces-
sories

Details

Coding pin

Use of the coding pin prevents incorrect mating to other connectors of the same type. The male pin should be omitted from the opposing cavity in the male insert.

Identification	Part number	Drawing Dimensions in mm
Han D®, Han DD®, Coding pin, plastic only for crimp termination with loss of one contact	09 33 000 9915	
Han E®, Han® EE, Han® EEE, Coding pin, plastic for crimp inserts only	09 33 000 9954	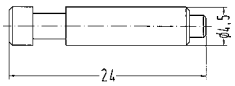

Han® Docking frame

Features

- Suitable for all inserts of the series Han E®, Han E® HMC, Han EE®, Han EE® HMC, Han EEE®, Han EEE® HMC, Han® ES, Han D® (size B), Han D® HMC, Han DD®, Han DD® HMC, Han-Com®, Han® HsB, Han-Modular®
- Ideal for applications in the field of transportation, as well as in the printing industry
- Due to the floating system of the docking frame the PE connection of the mounting base has to be installed separately
- Inserts are protected against mechanical damage

Technical characteristics

Mating cycles	≥500
Mating cycles with HMC connectors	≥10000
Material (hoods/housings)	stainless steel
Material (screwing)	zinc die-cast

Identification	Size	Part number	Drawing Dimensions in mm
Docking frame Range of delivery: 1 frame, 4 cheese head shoulder screws to fix the docking frame pull-in-range x-axis: ± 1.5 mm pull-in-range y-axis: ± 1.5 mm	6 B 10 B 16 B 24 B	09 30 006 1701 09 30 010 1701 09 30 016 1701 09 30 024 1701	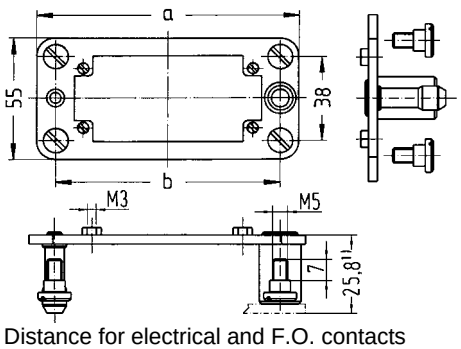 Distance for electrical and F.O. contacts max. 27 mm; for pneumatic contacts max. 26.5 mm 6 B: a=86; b=69 10 B: a=99; b=82 16 B: a= 119.5 ; b= 102.5 24 B: a=146; b=129 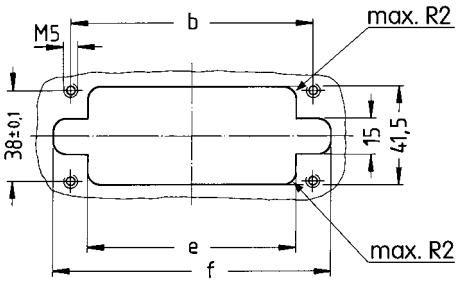 6 B: b= 69; e= 54.5; f= 84 10 B: b= 82; e= 67.5; f= 97 16 B: b= 102.5; e= 88; f= 117.5 24 B: b= 129; e= 114.5; f= 144

PE Multiple ground connection

Number of contacts

3+ ⏚

Features

- 3 PE-terminations
- Screws with ± head
- Self lifting washer
- Suitable for use with all inserts of the Han® 6 B to 24 B size (except Han® ESS-inserts)
- Suitable in hood high construction

Technical characteristics

Contacts	3
Material (contact)	copper alloy

Details

Application

The PE-multiple ground connection may be used to terminate three PE-wires on one connector. Each PE-wire can be terminated and removed separately

(acc. VDE 0113 DIN EN 60204 Pt. 14.1.1).

Identification	Part number	Drawing Dimensions in mm
PE Multiple ground connection, nickel plated contacts, Range of delivery: Multiple ground connection, Fixing screw M4 with washer contact resistance ≤3 mOhm	09 33 000 9992	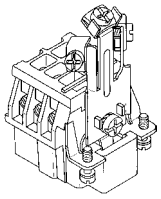

Details

Straight cable clamp fitting

When using inserts without hoods or housings and requiring a strain relief this system is suitable for all rectangular connectors of series Han DD®, Han® 40-64 D, Han E® / Han® ES, Han Hv E® / Han® Hv ES, Han® EE, Han® K 8/24. Fitted at the opposite end to the PE-termination.

Identification	Part number	Drawing Dimensions in mm
Straight cable clamp fitting, angled Range of delivery: Cable clamp fitting with 2 screws M3, Fixing screw M4 with washer	09 00 000 5339	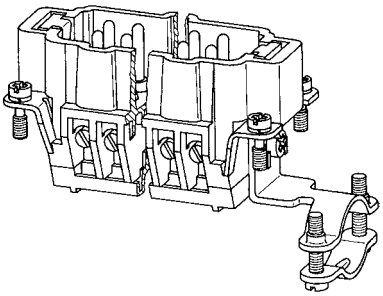 Clamping range of strain relief clamp: 9...19 mm
Straight cable clamp fitting, straight Range of delivery: Cable clamp fitting with 2 screws M3, Fixing screw M4 with washer	09 00 000 5340	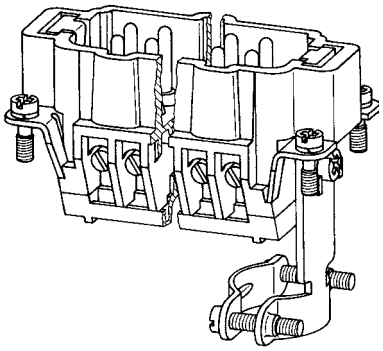

Special insert fixing screws

Features

- Useable for inserts without hoods or housings and requiring a strain relief
- Suitable for all rectangular connectors of the Han® series Han® 6 B, 10 B, 16 B, 24 B

Details

Bush/Screw pin

When using inserts without hoods or housings and requiring a locking facility this system is suitable for all rectangular connectors of the Han® series Han® 6 B, 10 B, 16 B, 24 B. For each connector we recommend two screw pins and two bushes as shown which are fitted diagonally to the inserts instead of the ordinary fixing screws. Holes for fixing to be drilled as shown.

Identification	Part number	Drawing Dimensions in mm
Bush Order 2 pieces for one connector.	09 33 000 9912	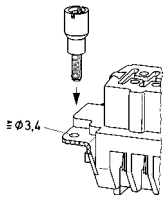
Screw pin Order 2 pieces for one connector.	09 33 000 9910	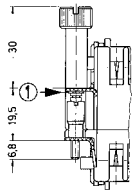 Mounting example 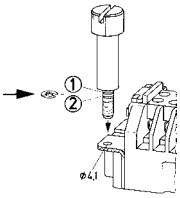

Screws

Identification	Size	Part number	Drawing Dimensions in mm
Toggle locking screw, for Han® 6/10/16/24 HPR 		09 40 000 9931	
Toggle locking screw, 3 HPR 		09 40 000 9933	
standard, Fixing screws 	M3	09 16 000 9903	
Fixing screws, for the Han® 3 A 	M3	09 20 000 9995	
Fixing screws, IP65 / IP67, for the Han® 3 A 	M3	09 20 000 9918	
Han-Compact®, Fixing screws 	ST 2.9x9.5 F-H	09 12 000 9921	
Contact screw, for Han® 3 A, 4 A, Staf®, for PE in Han® Q 5/0, Q 7/0 	M3	09 30 000 9997	

Screws

Identification	Size	Part number	Drawing Dimensions in mm
PE screw, for Han A®, Han® 15, 25 D 	M3.5	09 20 000 9919	
PE screw, for inserts size 6 B - 24 B 	M4	09 33 000 9925	
PE screw, for Han-Com®, Han® HsB 	M5	09 33 000 9926	
PE screw, for Han-Modular® hinged frames 	M3 M4	09 14 000 9953 09 14 000 9954	
Countersunk flat		09 70 000 9902	
Countersunk flat, with gasket		09 70 000 9905	
Locking screw, 3 HPR 	M4	09 40 000 9929	
Locking screw, for Han® 6/10/16/24 HPR 	M6	09 40 000 9932	
Locking screw, 48 HPR 	M6	09 40 000 9937	

single locking lever

Technical characteristics

Limiting temperatures	-40 °C ... 125 °C
Degree of protection acc. to IEC 60529	IP65

Technical characteristics

Surface (hoods/housings)	powder-coated
Colour (hoods/housings)	RAL 7037 (grey)

Identification	Size	Part number	Drawing Dimensions in mm
Han® B, Protection cover for bearing pedestal, plastic 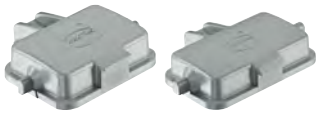	6 B 10 B 16 B 24 B	09 30 006 5410 09 30 010 5410 09 30 016 5410 09 30 024 5410	
Han® B, Protection cover for bearing pedestal, metal 	6 B 10 B 16 B 24 B	09 30 006 5403 09 30 010 5404 09 30 016 5404 09 30 024 5404	
Bearing pedestal for Han® 10 A, 16 A, 32 A, 6 B, 10 B, 16 B, 24 B		09 30 000 9964	

Technical characteristics

Material (accessories) plastic, metal

Identification	Size	Part number	Drawing Dimensions in mm
Frame, for custom test adapters Range of delivery: 2 assembly plates, 12 nuts for insertion		09 38 000 9901	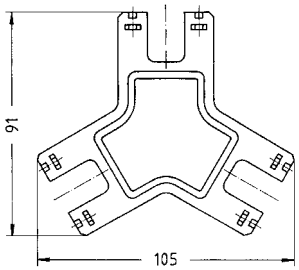
Mounting frames, for standard hoods/housings	6 B 10 B 16 B 24 B	09 40 000 9921 09 40 000 9922 09 40 000 9923 09 40 000 9924	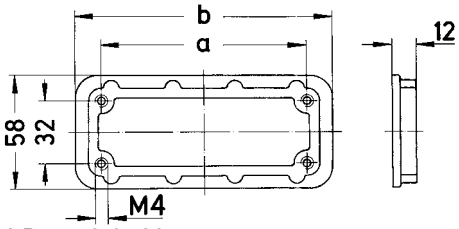 6 B: a=70; b=96 10 B: a=83; b=109 16 B: a=103; b=129 24 B: a=130; b=156
Contact lubricant DvDA, for Han® contacts, Applicable onto Han contacts to reduce mating and unmating forces., Content: Preperation of perfluorpolyethers Range of delivery: vaporizer (40 ml), handling instruction		09 99 000 0829	
Han E® AV, Identification strip, Multi-Contour (MK) Range of delivery: 64 pieces in one block		09 33 000 9971	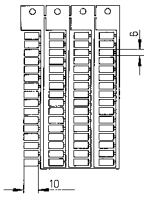

Further accessories

Identification	Size	Part number	Drawing Dimensions in mm
Han® ES AV, Identification strip, Single-Contour (SK) Range of delivery: 64 pieces in one block 		09 33 000 9973	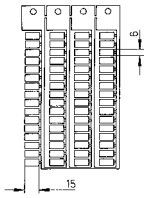
Label, according to CSA-approval Range of delivery: 50 labels per sheet		09 30 000 9958	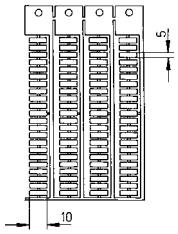
Locking element with cord, for Han® 10/16/24 B with double metal levers 		09 30 000 9987	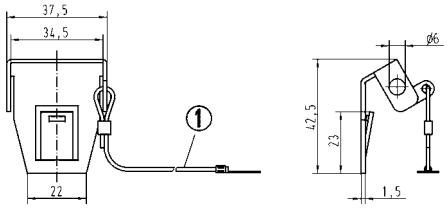 ① Length 120 mm
Locking element with cord, for Han® 10/16/24 B housings bulkhead mounting with Han-Easy Lock® double levers 		09 30 000 9986	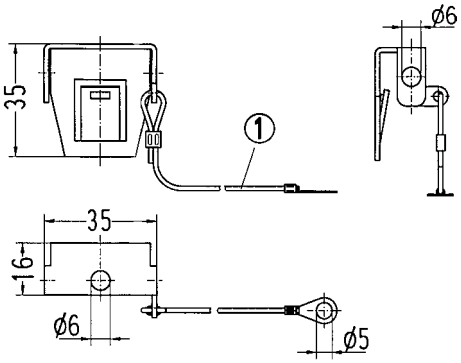 ① Length 120 mm

Acces-
sories

Contents	Page
Hand crimping tools for Han® standard contacts	**90.4**
Pneumatic crimping tools for Han® standard contacts	**90.9**
Crimping tools for D-Sub contacts	**90.11**
Crimping tools for Han® TC high current contacts	**90.12**
Crimping tools for fibre optic contacts	**90.16**
Crimping tools for other contacts	**90.17**
Crimping machine TC-C01	**90.20**
Crimping machine TK-M	**90.22**
Crimping machine TC-SC	**90.24**
Crimping machine BK	**90.26**
Assembly tools	**90.28**
Removal tools	**90.34**
Stripping tools	**90.37**

Overview Han® crimping tools

Crimp contacts Series	Part number				mm²	AWG	Crimping tools						Tools	
	male contact silver plated	female contact silver plated	male contact silver plated	female contact gold plated			09 99 000 0888	09 99 000 0110	09 99 000 0021	09 99 000 0303	09 99 000 0377	20 99 000 1035	removal tools	
Han D® Signal contacts 09 15 000	6107	6207	6127	6227	0.14 - 0.25	26 - 24	x						09 99 000 0012	09 99 000 0052
	6104	6204	6124	6224				x	x					
	6107	6207	6127	6227	0.37	22	x							
	6104	6204	6124	6224			x	x	x					
	6103	6203	6123	6223	0.5	20	x	x	x					
	6105	6205	6125	6225	0.75	18	x	x	x					
	6102	6202	6122	6222	1.0	18	x	x	x					
	6101	6201	6121	6221	1.5	16	x	x	x					
	6106	6206	6126	6226	2.5	14	x							
Han D® F.O. contacts 20 10 001	Male contact 3211 3212 / 3213		Female contact 3221 3222		1 mm POF							x		
Han E® Power contacts 09 33 000	6127	6227	6117	6217	0.14 - 0.37	26 - 22	x						09 99 000 0319	
	6121	6220	6122	6222	0.5	20	x	x	x					
	6114	6214	6115	6215	0.75	18	x	x	x					
	6105	6205	6118	6218	1.0	18	x	x	x					
	6104	6204	6116	6216	1.5	16	x	x	x					
	6102	6202	6123	6223	2.5	14	x	x	x					
	6106	6206			3.0	12	x	x						
	6107	6207	6119	6221	4.0	12	x	x						
Han E® F.O. contacts 20 10 001	Male contact 3311		Female contact 3321		1 mm POF							x		
Han-*Yellock*® Power contacts 11 05 000	6101	6201	6121	6221	0.14 - 0.37	26 - 22	x						09 99 000 0319	
	6102	6202	6122	6222	0.5	20	x	x	x					
	6103	6203	6123	6223	0.75	18	x	x	x					
	6104	6204	6124	6224	1.0	18	x	x	x					
	6105	6205	6125	6225	1.5	16	x	x	x					
	6106	6206	6126	6226	2.5	14	x	x	x					
	6107	6207	6127	6227	3.0	12	x	x						
	6108	6208	6128	6228	4.0	12	x	x						
Han® C Power contacts 09 32 000	6104	6204			1.5	16	x	x					09 99 000 0305	09 99 000 0381
	6105	6205			2.5	14	x	x						
	6107	6207			4.0	12	x	x		x				
	6108	6208			6.0	10				x	x			
	6109	6209			10.0	8				x	x			
Description														
Locator Han D®	09 99 000 0022								x					
Locator Han E®	09 99 000 0022								x					
Locator Han-*Yellock*®	09 99 000 0341							x						
	09 99 000 0343								x					
Locator Han® C	09 99 000 0304									x				
Locator Han D®, Han E® and Han® C	09 99 000 0376							x						

1) for Han® C Power contacts, 10 mm²

Overview Han® crimping tools

Crimp contacts Series	Part number				mm²	AWG	Crimping machines										
	male contact silver plated	female contact silver plated	male contact silver plated	female contact gold plated			09 99 000 0813 3)	09 99 000 0814 3)	09 98 000 6901 1)	09 98 000 6902 1)	09 98 000 8101	09 98 000 8102	09 98 000 8103	09 98 000 8107 5)	09 98 000 9001	09 98 000 9002	09 98 000 9003
Han D® Signal contacts 09 15 000	6107	6207	6127	6227	0.14 - 0.25	26 - 24			x 6)		x 6)				x		
	6104	6204	6124	6224			x										
	6107	6207	6127	6227	0.37	22			x		x				x		
	6104	6204	6124	6224			x		x		x				x		
	6103	6203	6123	6223	0.5	20	x		x		x				x		
	6105	6205	6125	6225	0.75	18	x		x		x				x		
	6102	6202	6122	6222	1.0	18	x		x		x				x		
	6101	6201	6121	6221	1.5	16	x		x		x				x		
	6106	6206	6126	6226	2.5	14			x		x				x		
Han E® Power contacts 09 33 000	6127	6227	6117	6217	0.14 - 0.37	26 - 22				x 6)		x 6)				x	
	6121	6220	6122	6222	0.5	20	x			x		x				x	
	6114	6214	6115	6215	0.75	18	x			x		x				x	
	6105	6205	6118	6218	1.0	18	x			x		x				x	
	6104	6204	6116	6216	1.5	16	x			x		x				x	
	6102	6202	6123	6223	2.5	14	x			x		x				x	
	6106	6206			3.0	12	x			x		x				x	
	6107	6207	6119	6221	4.0	12	x			x		x				x	
Han-*Yellock*® Power contacts 11 05 000	6101	6201	6121	6221	0.14 - 0.37	26 - 22								x 6)			
	6102	6202	6122	6222	0.5	20	x							x			
	6103	6203	6123	6223	0.75	18	x							x			
	6104	6204	6124	6224	1.0	18	x							x			
	6105	6205	6125	6225	1.5	16	x							x			
	6106	6206	6126	6226	2.5	14	x							x			
	6107	6207	6127	6227	3.0	12	x										
	6108	6208	6128	6228	4.0	12	x										
Han® C Power contacts 09 32 000	6104	6204			1.5	16	x						x				x
	6105	6205			2.5	14	x						x				x
	6107	6207			4.0	12	x						x				x
	6108	6208			6.0	10		x					x				x
	6109	6209			10.0	8		x					x				x
Description																	
Locator Han-*Yellock*®	09 99 000 0344						x										

1) TK-M basic machine 09 98 000 6900 is required
3) basic unit CP 600 (09 99 000 0810) is required
5) TC-SC basic machine 09 98 000 8000 is required
6) depending on the wire

Hand crimping tools for Han® standard contacts

Identification	Wire cross section (mm²)	Part number	
Crimping tool, Han D®: 0.14 ... 2.5 mm², Han E®: 0.14 ... 4 mm², Han-*Yellock*®: 0.14 ... 4 mm², Han® C: 1.5 ... 4 mm², The high end tool with best performance. Range of delivery: locator included, handling instruction For wire gauges from 0.14 und 0.25 mm² please use the contacts 09150006107, 6207, 6127 or 6227.	0.14 – 4	09 99 000 0888	
for optional testing		09 99 000 0889	
Han D®, Han E®, Han-*Yellock*®, Han® C, Locator for crimp tool, as spare part		09 99 000 0887	

Hand crimping tools for Han® standard contacts

Identification	Wire cross section (mm²)	Part number	
Han-*Yellock*®, Locator for crimp tool		09 99 000 0341	
HARTING standard crimping tool, Han D®: 0.14 ... 1.5 mm², Han E®: 0.5 ... 4 mm², Han-*Yellock*®: 0.5 ... 4 mm², Han® C: 1.5 ... 4 mm², Robust allrounder with very good performance. Range of delivery: locator included, Han D®, Han E®, Han® C, Please order Han-*Yellock*® separately!	0.14 – 4	09 99 000 0110	
Han D®, Han E®, Han® C, Locator for crimp tool, as spare part		09 99 000 0376	

Hand crimping tools for Han® standard contacts

Identification	Wire cross section (mm²)	Part number	
Han-*Yellock*®, Locator for crimp tool		09 99 000 0343	
HARTING Service crimping tool, Han D®: 0.14 ... 1.5 mm², Han E®: 0.5 ... 2.5 mm², Han-*Yellock*®: 0.5 ... 2.5 mm², The service tool for on-site maintenance. Range of delivery: locator included, Han D®, Han E®, Please order Han-*Yellock*® separately!	0.14 – 2.5	09 99 000 0021	
Han D®, Han E®, Locator for crimp tool, as spare part		09 99 000 0022	

Hand crimping tools for Han® standard contacts

Identification	Wire cross section (mm²)	Part number	
HARTING crimping tool, Han® C: 4 ... 10 mm², The professional tool for a wide contact range. Range of delivery: locator included, Han® C	4 – 10	09 99 000 0303	
Han® C, Locator for crimp tool, as spare part		09 99 000 0304	
Locator for crimp tool, Han E®: 5.5 mm²		09 99 000 0306	
Locator for crimp tool, Han-*Yellock* ® PE, contacts 6 + 10 mm²		09 99 000 0845	

Hand crimping tools for Han® standard contacts

Identification	Wire cross section (mm²)	Part number	
HARTING crimping tool, Han® C: 6 ... 10 mm², The professional tool for big wire cross section. Range of delivery: locator included	6 – 10	09 99 000 0377	

Pneumatic crimping tools for Han® standard contacts

Identification	Wire cross section (mm²)	Part number	
Han-*Yellock*®, Locator for crimp tool		09 99 000 0344	
HARTING pneumatic crimping tool CP 600 Range of delivery: basic unit without tool head		09 99 000 0810	
Footswitch, CP 600		09 99 000 0811	
Table fixing, CP 600		09 99 000 0812	
Tool head, Han D®: 0.14 ... 1.5 mm², Han E®: 0.5 ... 4 mm², Han-*Yellock*®: 0.5 ... 4 mm², Han® C: 1.5 ... 4 mm² Range of delivery: locator included, Han D®, Han E®, Han® C, Please order Han-*Yellock*® separately!	0.14 – 4	09 99 000 0813	

Pneumatic crimping tools for Han® standard contacts

Identification	Wire cross section (mm²)	Part number	
Tool head, Han® C: 6 ... 10 mm² Range of delivery: locator included	6 – 10	09 99 000 0814	

Crimping tools for D-Sub contacts

Identification	Wire cross section (mm²)	Part number	
HARTING crimping tool, for 500 bandoliered standard contacts	0.09 – 0.56	09 99 000 0169	
Crimping tool, for single stamped D-Sub contact	0.09 – 0.56	09 99 000 0175	
Hand crimping tool, for turned male and female contact, 4 indent crimp in acc. to MIL 22 520/2-01	0.09 – 0.82	09 99 000 0501	
Locator for crimp tool, for 09 99 000 0501		09 99 000 0531	

Crimping tools for Han® TC high current contacts

Identification	Wire cross section (mm²)	Part number	
HARTING Battery hydraulic tool, Pressing force 60 kN, Crimp die acc. to DIN 46 235 with pressing width 9mm	10 – 70	09 99 000 0850	
HARTING hydraulic handtool, Pressing force 60 kN, Crimp die acc. to DIN 46 235 with pressing width 9mm	10 – 70	09 99 000 0851	
Crimp die, for 60 kN tool, Identification 6, acc. to DIN 46 235, Pressing width 9mm, TC 70, TC 100 (D8) Range of delivery: supplied as a pair	10	09 99 000 0852	
Crimp die, for 60 kN tool, Identification 8, acc. to DIN 46 235, Pressing width 9mm, TC 70, TC 100 (D8) Range of delivery: supplied as a pair	16	09 99 000 0853	
Crimp die, for 60 kN tool, Identification 10, acc. to DIN 46 235, Pressing width 9mm, TC 70, TC 100, TC 200, TC 250, TC 350 Range of delivery: supplied as a pair	25	09 99 000 0854	

Crimping tools for Han® TC high current contacts

Identification	Wire cross section (mm²)	Part number	
Crimp die, for 60 kN tool, Identification 12, acc. to DIN 46 235, Pressing width 9mm, TC 100, TC 200, TC 250, TC 350 Range of delivery: supplied as a pair	35	09 99 000 0855	
Crimp die, for 60 kN tool, Identification 14, acc. to DIN 46 235, Pressing width 9mm, TC 200, TC 250, TC 350 Range of delivery: supplied as a pair	50	09 99 000 0856	
Crimp die, for 60 kN tool, Identification 16, acc. to DIN 46 235, Pressing width 9mm, TC 200, TC 250, TC 350, TC 650 Range of delivery: supplied as a pair	70	09 99 000 0857	

Crimping tools for Han® TC high current contacts

Identification	Wire cross section (mm²)	Part number	
HARTING Battery hydraulic tool, Pressing force 120 kN, Crimp die acc. to DIN 46 235 with pressing width 10-14mm	10 – 240	09 99 000 0860	
HARTING hydraulic handtool, Pressing force 120 kN, Crimp die acc. to DIN 46 235 with pressing width 10-14mm	10 – 240	09 99 000 0861	
Crimp die, for 120 kN tool, Identification 6, acc. to DIN 46 235, Pressing width 10mm, TC 70, TC 100 (D8) Range of delivery: supplied as a pair	10	09 99 000 0862	
Crimp die, for 120 kN tool, Identification 8, acc. to DIN 46 235, Pressing width 10mm, TC 70, TC 100 (D8) Range of delivery: supplied as a pair	16	09 99 000 0863	
Crimp die, for 120 kN tool, Identification 10, acc. to DIN 46 235, Pressing width 10mm, TC 70, TC 100, TC 200, TC 250, TC 350 Range of delivery: supplied as a pair	25	09 99 000 0864	

Crimping tools for Han® TC high current contacts

Identification	Wire cross section (mm²)	Part number	
Crimp die, for 120 kN tool, Identification 12, acc. to DIN 46 235, Pressing width 10mm, TC 100, TC 200, TC 250, TC 350 Range of delivery: supplied as a pair	35	09 99 000 0865	
Crimp die, for 120 kN tool, Identification 14, acc. to DIN 46 235, Pressing width 13mm, TC 200, TC 250, TC 350 Range of delivery: supplied as a pair	50	09 99 000 0866	
Crimp die, for 120 kN tool, Identification 16, acc. to DIN 46 235, Pressing width 13mm, TC 200, TC 250, TC 350, TC 650 Range of delivery: supplied as a pair	70	09 99 000 0867	
Crimp die, for 120 kN tool, Identification 18, acc. to DIN 46 235, Pressing width 14mm, TC 350, TC 650 (D20) Range of delivery: supplied as a pair	95	09 99 000 0868	
Crimp die, for 120 kN tool, Identification 20, acc. to DIN 46 235, Pressing width 14mm, TC 350, TC 650 (D20) Range of delivery: supplied as a pair	120	09 99 000 0869	
Crimp die, for 120 kN tool, Identification 22, acc. to DIN 46 235, Pressing width 10mm, TC 650 Range of delivery: supplied as a pair	150	09 99 000 0870	
Crimp die, for 120 kN tool, Identification 25, acc. to DIN 46 235, Pressing width 10mm, TC 650 Range of delivery: supplied as a pair	185	09 99 000 0871	
Crimp die, for 120 kN tool, Identification 28, acc. to DIN 46 235, Pressing width 10mm, TC 650 Range of delivery: supplied as a pair	240	09 99 000 0872	

Crimping tools for fibre optic contacts

Identification	Part number	
HARTING crimping tool, for F.O. connector (glass fibre), SC, F-SMA F-ST, SW 3.8 mm, SW 4.3 mm, SW 4.95 mm, for crimping the strain relief	20 99 000 1031	
HARTING crimping tool, for F.O. connector (plastic fibre), SC, F-SMA F-ST, SW 3.0 mm, SW 4.95 mm, SW 6.95 mm, for crimping the strain relief	20 99 000 1033	
HARTING crimping tool, for following 1 mm POF contacts, Han D®, Han E®, DIN 41 626, Ferrule, F-SMA, -ST	20 99 000 1035	

Crimping tools for other contacts

Identification	Wire cross section (mm²)	Part number	
HARTING crimping tool, for wire end ferrules, 10 mm²	10	09 99 000 0374	
HARTING crimping tool, for wire end ferrules, 16...25 mm²	16 – 25	09 99 000 0830	
HARTING crimping tool, for Han-Fast® Lock single contact, locator included	4 – 10	09 99 000 0831	
HARTING crimping tool, for coaxial contact, acc. to DIN 41 626, Please order crimp dies separately.		09 99 000 0503	
Crimp die		09 99 000 0508	
HARTING crimping tool, for coaxial contact, acc. to DIN 41 626		09 99 000 0194	

Crimping tools for other contacts

Identification	Part number
Crimp die, SW 6.0	61 03 000 0098
Crimp die, SW 6.5	61 03 000 0099
Crimp die, SW 7.0	61 03 000 0100
Crimp die, SW 7.5	61 03 000 0101
Crimp die, SW 8.0	61 03 000 0102
Crimp die, SW 8.5	61 03 000 0103
Crimp die, SW 9.0	61 03 000 0104
Crimp die, SW 9.5	61 03 000 0105
Crimp die, SW 11.0	61 03 000 0168
Crimp die, SW 11.5	61 03 000 0169
Crimp die, SW 10.5	61 03 000 0172
Crimp die, SW 14.0	61 03 000 0173
Crimp die, SW 10.0	61 03 000 0174
Crimp die, SW 12.0	61 03 000 0175
Crimp die, SW 12.5	61 03 000 0176
Crimp die, SW 13.0	61 03 000 0177
Crimp die, SW 13.5	61 03 000 0178
Crimp die, SW 5.0	61 03 000 0179
Crimp die, SW 5.5	61 03 000 0180

Crimping tools for other contacts

Identification	Part number	
HARTING crimping tool, for crimp barrel and crimp flange, Please order crimp dies separately., (61 03 000 0xxx)	61 03 600 0020	

Crimping machine TC-C01

Features

- Basic unit of compact construction for pre-stripped wires (stranded wire)
- Easy handling due to well-arranged design
- For individual, turned male and female contacts
- Selective processing of male and female contacts
- Automatic contact feed
- Reproducible, top quality gas-tight crimp connections
- Non-slip, anti-vibration adjustable feet for setting the height
- Low noise level
- With carrying handle
- Removable electric and pneumatic supply connections
- Maintenance interval counter
- Minimal setup effort
- Crimping depth can be set without tools
- Low follow-up costs for maintenance and repair
- Easy replacement of wearing components

Technical characteristics

Weight	≥24 kg
Noise level	ca.62 dB
Nominal voltage, max.	230 V
Nominal frequency	50 Hz
Power consumption	ca.0.2 kW
Pressure	ca.6 bar
Control system	PLC
Work cycle trigger	Footswitch
Work cycle	1 s
Crimp type	Four-point crimping
Contact feed	Vibratory bowl feed
Stroke counters	Resettable daily counter and permanent counter
Dimensions	345 x 230 x 400 mm

Details

Range of delivery:

with 2.0 m connection cable and grounding plug,

with 2.0 m pneumatic hose, quick-release coupling and N6 plug-in nipple,

footswitch,

carrying handle,

operating instructions,

declaration of conformity

Crimping machine TC-C01

Identification	Wire cross section (mm²)	Part number	Drawing Dimensions in mm
Crimping machine TC-C01, for Han D® contact	0.14 – 2.5	09 98 000 9001	
Crimping machine TC-C01, for Han E® contact	0.14 – 4	09 98 000 9002	
Crimping machine TC-C01, for Han® C contact	1.5 – 10	09 98 000 9003	
Pneumatic maintenance unit, optional accessory		09 98 336 6851	

Crimping machine TK-M

Features

- Basic unit of compact construction
- Fast stripping and crimping in one operating step
- Easy handling due to well-arranged design
- Touchscreen controlling
- For individual, turned male and female contacts
- Selective processing of male and female contacts
- Contact magazine with filling control
- Reproducible, top quality gas-tight crimp connections
- Infinitely variable adjustment parameters (stripping depth, stripping length, crimping depth, crimp contact feed rate)
- Rotatable vibration feeder and actuator in basic unit
- Low noise level
- For oil-free compressed air
- Minimal setup effort
- Low maintenance costs

Technical characteristics

Weight	<60 kg
Noise level	<70 dB
Drive	electro-pneumatic
Nominal voltage, max.	230 V
Nominal frequency	50 Hz
Power consumption	ca.0.75 kW
Pressure	ca.6 bar
Compressed air connection	3 dm³ / work cycle
Control system	PLC
Work cycle trigger	sensor
Work cycle	1.5 s
Crimp type	Four-point crimping
Contact feed	Vibratory bowl feed
Stroke counters	Resettable daily counte, total counter, operating hours, maintenance counter and quantity preselection
Dimensions	580 x 470 x 470 mm

Details

Range of delivery:
with one mounted interchangeable unit,
with 2.0 m connection cable and grounding plug,
with 2.0 m pneumatic hose with plug-in nipple N6,
plug gauges for setting the crimping,
centering bush for positioning the plug gauges,
draw for insulation remains,
drawer for holding the contacts when the magazine is emptied,
tool set for setting,
1 set of stripping blades,
operating instructions,
declaration of conformity

Crimping machine TK-M

Identification	Wire cross section (mm²)	Part number	
Crimping machine TK-M, Basic machine without interchangeable unit Range of delivery: Tool set for setting, 1 set of stripping blades, operating instructions, declaration of conformity		09 98 000 6900	
Han D®, Interchangeable unit	0.14 – 2.5	09 98 000 6901	
Han E®, Interchangeable unit	0.14 – 4	09 98 000 6902	

Crimping machine TC-SC

Features

- Fast stripping and crimping in one operating step
- Basic unit of compact construction
- Easy handling due to well-arranged design
- Touchscreen controlling
- For individual, turned male and female contacts (series Han D®, Han E®, Han® C, Han P®, Han-*Yellock*®, D- Sub)
- Selective processing of male and female contacts
- Contact magazine with filling control
- Reproducible, top quality gas-tight crimp connections
- Motor-driven variable adjustment parameters (stripping depth, stripping length, crimping depth and wire position)
- Infinitely variable adjustment parameters (wire retention force and crimp contact feed rate)
- Low noise level
- For oil-free compressed air
- Minimal setup effort
- Low maintenance costs

Technical characteristics

Weight	≥75 kg
Noise level	ca.75 dB
Drive	electro-pneumatic
Nominal voltage, max.	230 V
Nominal frequency	50 Hz
Power consumption	ca.1 kW
Pressure	ca.6 bar
Compressed air connection	3 dm³ / work cycle
Control system	PLC
Work cycle trigger	sensor
Work cycle	2 s
Crimp type	Four-point crimping
Contact feed	Vibratory bowl feed
Stroke counters	Resettable daily counte, total counter, operating hours, maintenance counter and quantity preselection
Dimensions	480 x 650 x 560 mm

Details

Range of delivery:

with one mounted interchangeable unit,
with 2.0 m connection cable and grounding plug,
with 2.0 m pneumatic hose with plug-in nipple N6,
tool set for setting,
1 set of stripping blades,
operating instructions,
declaration of conformity

Crimping machine TC-SC

Identification	Wire cross section (mm²)	Part number	
Crimping machine TC-SC Range of delivery: Tool set for setting, 1 set of stripping blades, operating instructions, declaration of conformity		09 98 000 8000	
Han D®, Interchangeable unit	0.14 – 2.5	09 98 000 8101	
Han E®, Interchangeable unit	0.14 – 4	09 98 000 8102	
Han® C, Interchangeable unit, only for use with crimping tool 09 98 300 8103	1.5 – 10	09 98 000 8103	
D-Sub, Interchangeable unit	0.5 – 0.75	09 98 000 8104	
Han-*Yellock*®, Interchangeable unit	0.5 – 2.5	09 98 000 8107	
Han® C, Crimping tool	1.5 – 10	09 98 300 8103	

Features

- Fast stripping and crimping in one operating step
- Easy handling due to quick change tool and stripper
- Suitable for D-Sub crimp contacts
- Selective processing of male and female contacts
- Hand wheel for manual adjustments
- Maintenance-friendly through needle bearing rail
- Automatic exhaust of the isolation remainders
- Reproducible, top quality gas-tight crimp connections
- With crimp force monitor
- Setting parameters with raster rotary button (depth of insulation stripping, length of insulation stripping, crimping heigth on wire, crimping heigth on isulation, wire retainer position, band thrust and wire position in the crimp contact)
- Non slip and anti-vibration feet
- Low noise level
- For oil-free compressed air
- Low maintenance costs
- V-Blades for special wires on request

Technical characteristics

Weight	<72 kg
Noise level	85 dB
Drive	electro-pneumatic
Nominal voltage, max.	230 V
Nominal frequency	50 Hz
Power consumption	0.75 kW
Pressure	6 bar
Control system	PLC
Stripping device	type 514
Suction apparatus	2000.0900.20
Work cycle trigger	sensor
Work cycle	0.35 s
Illumination	integrated tool light 20001326
Motor speed	440 –2000 rpm
Stroke counters	Resettable daily counter and permanent counter
Dimensions	690 (with a contact reel: 1400) x 420 x 430 mm

Details

Range of delivery:
with role owner and guide plate,
with 2.0 m connection cable and grounding plug,
with 2.0 m pneumatic hose with plug-in nipple N9,
oiler bottle for the lubricating of the crimping contacts,
tool set for setting,
1 set of stamps for wire and isolation-crimp,
1 anvil one-piece for wire and isolation-crimp,
1 set of stripping blades,
1 litre of contact oil,
operating instructions,
declaration of conformity

Crimping machine BK

Identification	Wire cross section (mm²)	Part number	
Crimping machine BK Range of delivery: with role owner and guide plate, Tool set for setting, 1 set of stripping blades, operating instructions, declaration of conformity		09 98 000 5000	
D-Sub, Quick change tool, small	0.09 – 0.25	09 98 000 3008	
D-Sub, Quick change tool, large	0.25 – 0.5	09 98 000 3009	

Identification	Size	Part number	
Panel punch, Han-*Yellock*® 30, max. plate thickness (structural grade carbon steel): 2.0 mm, for HARTING panel punch, ≥60 kN, 3/4” UNF		11 99 300 0001	
Panel punch, Han-*Yellock*® 60, max. plate thickness (structural grade carbon steel): 2.0 mm, for HARTING panel punch, ≥60 kN, 3/4” UNF		11 99 600 0001	
HARTING Battery hydraulic panel punch, to produce panel cut outs for connectors, punching pressure: 60 kN Range of delivery: in plastic case, Lithium-Ion battery 18 V, 3 Ah, Charging set, Accessories		09 99 000 0900	
HARTING hydraulic hand panel punch, to produce panel cut outs for connectors, punching pressure: 60 kN Range of delivery: in plastic case, Accessories		09 99 000 0901	
HARTING Punch units for hydraulic punch drivers, max. plate thickness (structural grade carbon steel): 2.0 mm, 36.0 x 52.0 mm	6 B	09 99 000 0902	

Identification	Size	Part number
HARTING Punch units for hydraulic punch drivers, max. plate thickness (structural grade carbon steel): 2.0 mm, 36.0 x 65.0 mm	10 B	09 99 000 0903
HARTING Punch units for hydraulic punch drivers, max. plate thickness (structural grade carbon steel): 2.0 mm, 36.0 x 86.0 mm	16 B	09 99 000 0904
HARTING Punch units for hydraulic punch drivers, max. plate thickness (structural grade carbon steel): 2.0 mm, 36.0 x 112.0 mm	24 B	09 99 000 0905
HARTING Punch units for hydraulic punch drivers, max. plate thickness (structural grade carbon steel): 2.0 mm, 21.3 x 21.3 mm	3 HPR	09 99 000 0906
HARTING Punch units for hydraulic punch drivers, max. plate thickness (structural grade carbon steel): 2.0 mm, 22.0 x 22.0 mm	3 A	09 99 000 0907
HARTING Punch units for hydraulic punch drivers, max. plate thickness (structural grade carbon steel): 2.0 mm, 24.0 x 73.0 mm	16 A	09 99 000 0909
HARTING Punch units for hydraulic punch drivers, max. plate thickness (structural grade carbon steel): 2.0 mm, 22.0 x 22.0 mm, Han-*Yellock*® 10		09 99 000 0910
HARTING Punch units for hydraulic punch drivers, max. plate thickness (structural grade carbon steel): 2.0 mm, 27.5 x 31.5 mm, Han-Modular® Compact		09 99 000 0912

Identification	Part number	
Torque set, for High Current axial screw contact, incl. reversing blade (SW 4.0 + SW 5.0), Moment of torque: 5-14 Nm Range of delivery: High quality metal box, Variable tightening torque tool TorqueVario®-STplus, Setting tool: torque-setter, HARTING optimised interchangeable blades hexagonal SW 4, HARTING optimised interchangeable blades hexagonal SW 5	09 99 000 0833	
Torque set, for power contact, incl. reversing blade (SW 2.0 + SW 2.5 + PH2), + different bits, + adapter blade, Moment of torque: 1-5 Nm Range of delivery: High quality metal box, Variable tightening torque tool TorqueVario®-S, Setting tool: torque-setter, HARTING optimised interchangeable blades hexagonal SW 2, HARTING optimised interchangeable blades hexagonal SW 2.5, HARTING optimised interchangeable blades PH2, Torque bit universal holder, Bits: SW3, SW4 , PH0, PH1, PH2, T10, T15, T20, slot 0.6 x 4.5, slot 0.8 x 5.5	09 99 000 0834	
Torque set, for HARTING screw contacts and fixing screws, Moment of torque: 0.5 + 1.2 Nm Range of delivery: High quality metal box, Two pre-set tightening torque screwdrivers TorqueFix®, Interchangeable blades PH1, PH2, slot 0.5 x 3.0	09 99 000 0835	

Identification	Part number	Drawing Dimensions in mm
Insertion tool, for Han® ES insert	09 99 000 0367	
Insertion tool for crimp contacts, small cross sections, variable length of blade, Han D®, Han E®, Han-*Yellock* ®, When using wire cross section below 0,75 mm² a mounting tool for inserting the contact into the insert is recommended., The terminated contact is inserted into the tool and pushed into the contact chamber from the termination side.	09 99 000 0847	
Replacement-tip, for 09 99 000 0847	09 99 000 0848	
Hexagonal driver for axial screw, Bit 1/4“, 40 A contact (SW 2)	09 99 000 0369	
Hexagonal driver for axial screw, Bit 1/4“, 70 A contact (SW 2.5)	09 99 000 0375	
Hexagonal driver for axial screw, with grip, SW 4 (e. g. Han® 100 A Axial module)	09 99 000 0363	
Hexagonal driver for axial screw, adapter 3/8“, SW 4 (e. g. Han® 100 A Axial module)	09 99 000 0370	

Assembly tools

Identification	Part number	Drawing Dimensions in mm
Hexagonal driver for axial screw, with grip, SW 5 (e. g. Han® 200 A Axial module)	09 99 000 0364	
Hexagonal driver for axial screw, adapter 3/8“, SW 5 (e. g. Han® 200 A Axial module)	09 99 000 0371	
Hexagonal driver for axial screw, adapter 3/8“, SW 8 (e. g. Han® HC Modular 650)	09 99 000 0372	
Han® VDE Screw Driver Set, The standard set. Range of delivery: slim bit screw driver 0.4 x 2.5, slim bit screw driver 0.5 x 3.0, slim bit screw driver 0.6 x 3.5, slim bit screw driver 1.0 x 4.5, Phillips screw driver PH1 (191 x 23 mm), Phillips screw driver PH2 (218 x 23 mm)	09 99 000 0836	
Torque set, for guiding pins and bushes, Moment of torque: 0.5 Nm, incl. 1/4” Bit Range of delivery: Torque bit universal holder ¼“, 1 HARTING guiding pins and bushes bit, Product comes already pre-assembled in practical plastic packaging	09 99 000 0840	
Bit ¼“ as a spare part for guiding pins and bushes Range of delivery: packaging unit: 5 pieces	09 99 000 0841	
Screw Driver Set Slimline, Insolated blade for slim assembly. Range of delivery: slim bit screw driver 0.6 x 3.5, slim bit screw driver 0.8 x 4.5, Phillips screw driver PH1 (191 x 30 mm), Phillips screw driver PH2 (218 x 36 mm)	09 99 000 0844	
Polishing paper, for POF grain size 1000 Range of delivery: Each part number means 5 pieces	20 80 001 9911	

Identification	Part number	Drawing Dimensions in mm
Polishing paper, for GI 9 µ-grain size Range of delivery: Each part number means 5 pieces	20 80 001 9912	
Polishing paper, for GI 1 µ-grain size Range of delivery: Each part number means 5 pieces	20 80 001 9913	
Polishing tool, DIN 41 626	20 99 000 1092	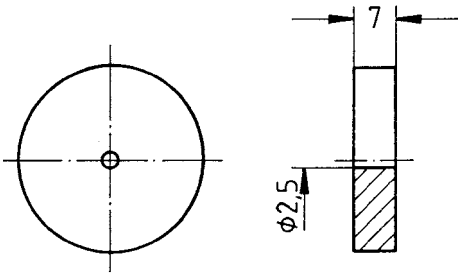
Polishing tool, POF cable 2.2mm diameter	20 99 000 1093	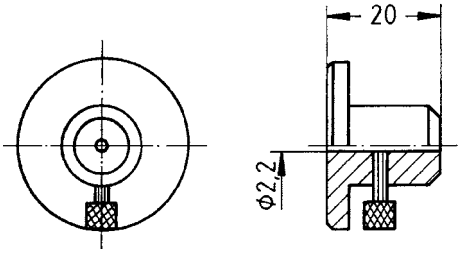
Polishing tool, SC	20 99 000 1097	

Removal tools

Identification	Wire cross section (mm²)	Part number	
Han-*Yellock*®, Removal tool, for Han-*Yellock*® modules and frames, thermoplastic		11 99 000 0001	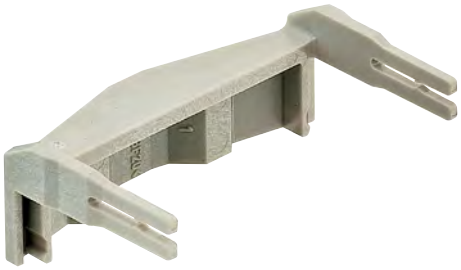
Han-*Yellock*®, Removal tool, for Han-*Yellock*® modules and frames, metal		11 99 000 0002	
Han-Modular®, Removal tool, for all Han-Modular modules in plastic frames, Insert the tool from the termination side between plastic frame and module and remove the module by applying slight pressure from the mating side. You need 2 pieces for the removal of a single module and 4 pieces for the double module.		09 99 000 0331	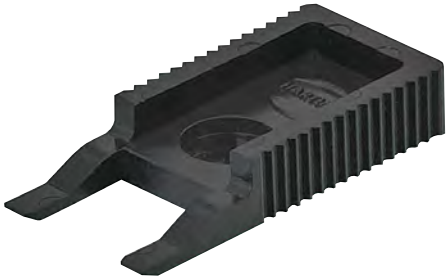
Removal tool, for the Han® 100 A single module, for Han® GND		09 99 000 0827	
Han-Modular®, Han-Eco®, Han-*Yellock*®, Removal tool, metal, for single modules, Insert the tool from the termination side between plastic frame and module and remove the module by applying slight pressure from the mating side.		09 99 000 0828	

Removal tools

Identification	Wire cross section (mm²)	Part number	
Han-Modular®, Removal tool, metal, for double modules, Insert the tool from the termination side between plastic frame and module and remove the module by applying slight pressure from the mating side.		09 99 000 0842	
Removal tool, for LC contact in the Han® LC module		09 99 000 0843	
Han D®, Replacement-tip, for 09 99 000 0012		09 99 000 0004	
Han D®, Removal tool, Insert tool from the mating side of the connector until it comes to a stop., By putting additional pressure on the tool the contact is unlocked and pushed out towards the termination side., When using the removal tool (…0052) the contact is unlocked by pushing the central plunger.		09 99 000 0012	
Han D®, Removal tool, Service		09 99 000 0052	
Han® C, Removal tool	1.5 – 6 10	09 99 000 0305 09 99 000 0381	
Han E®, Removal tool for crimp contacts, Insert the tool from the termination side until it comes to a stop., After that the contact with the attached wire can be pulled out of the isolator body.		09 99 000 0319	
Removal tool for crimp contacts, for contact in the multi module		09 99 000 0328	
Han® EasyCon, Removal tool, For assembly and disassembly of shielding clamps.		09 99 000 0334	
Han-Modular®, Insertion and removal tool, for D-Sub crimp contact		09 99 000 0368	

Removal tools

Identification	Wire cross section (mm²)	Part number	
Han-Quintax®, Removal tool, for Quintax contact		09 99 000 0323	
Removal tool, for locking sleeves in the HV module, Insert from mating side.		09 99 000 0327	
Removal tool, for the Han® 100 A crimp module		09 99 000 0383	
Removal tool, for the Han® 200 A crimp module, Insert from mating side.		09 99 000 0820	
Han® HC Modular, Removal tool, for Han® HC Modular 250 Crimp, For unlocking the fixing plate, insert from mating side.		09 99 000 0332	
Han® HC Individual, Removal tool		09 99 000 0826	
Han-Fast® Lock, Removal tool, For easier removal of the Fast-Lock contact from the printed circuit board.		09 99 000 0837	

Stripping tools

Identification	Wire cross section (mm²)	Part number	
Stripping tool	0.08 – 10	09 99 000 0159	
Stripping tool, self-adjusting	0.03 – 10	09 99 000 0808	
Fibre stripper, 0.3 mm		20 99 000 1041	
Fibre stripper, 1 mm		20 99 000 1045	
Fibre stripper, 0.18 / 0.3 mm		20 99 000 1046	

Altanium Temperature Controllers and Ultra Hot Runners provide superior melt delivery for the Plastics Industry.

Husky Hot Runner Systems with HARTING Han® 24 E connectors providing power and signal – quality connections resulting in highest reliability and minimum down time in molding systems.

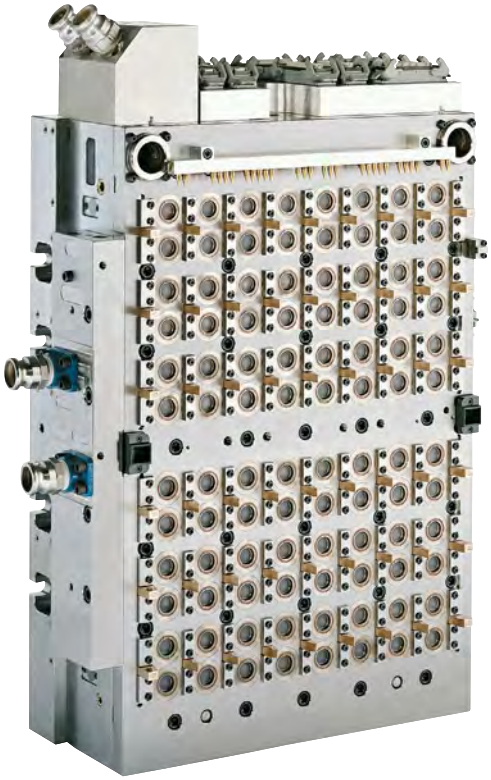

Photo courtesy:
Husky Injection Molding Systems, Bolton, Ontario, Canada

List of part numbers

part numbers	page
09 00 000 5047	13.50
09 00 000 5057	13.50
09 00 000 5058	13.50
09 00 000 5059	13.50
09 00 000 5156	13.50
09 00 000 5157	13.50
09 00 000 5158	13.50
09 00 000 5206	80.20
09 00 000 5207	80.20
09 00 000 5208	80.20
09 00 000 5209	80.20
09 00 000 5210	80.21
09 00 000 5211	80.21
09 00 000 5221	80.7
09 00 000 5222	80.7
09 00 000 5223	80.7
09 00 000 5224	80.7
09 00 000 5225	80.7
09 00 000 5228	80.7
09 00 000 5229	80.7
09 00 000 5230	80.7
09 00 000 5231	80.7
09 00 000 5235	80.21
09 00 000 5241	80.7
09 00 000 5242	80.7
09 00 000 5244	13.52
09 00 000 5244	80.7
09 00 000 5246	80.7
09 00 000 5256	80.21
09 00 000 5257	80.21
09 00 000 5258	80.21
09 00 000 5280	80.21
09 00 000 5298	80.21
09 00 000 5315	80.14
09 00 000 5316	80.14
09 00 000 5317	80.14
09 00 000 5325	80.14
09 00 000 5339	80.29
09 00 000 5340	80.29
09 00 000 5341	80.20
09 00 000 5342	80.20
09 00 000 5350	80.13
09 00 000 5351	80.13
09 00 000 5352	80.13
09 00 000 5353	80.13
09 00 000 5354	80.13
09 00 000 5355	80.13
09 00 000 5356	80.13
09 00 000 5357	80.13
09 00 000 5358	80.13
09 00 000 5359	80.13
09 00 000 5360	80.13
09 00 000 5361	80.13
09 00 000 5362	80.13
09 00 000 5363	80.13
09 00 000 5364	80.13
09 00 000 5401	80.7
09 00 000 5602	80.22
09 00 000 5603	80.22
09 00 016 5603	80.23
09 00 024 5601	80.23
09 00 024 5611	80.23
09 08 000 6123	20.12
09 08 000 6124	20.12
09 08 000 6923	20.12
09 08 000 6924	20.12
09 08 000 7123	20.12
09 08 000 7124	20.12
09 08 000 7222	20.12
09 08 000 7923	20.12
09 08 000 7924	20.12
09 11 000 6104	14.15
09 11 000 6112	06.13
09 11 000 6112	42.6
09 11 000 6113	06.13
09 11 000 6113	42.6
09 11 000 6114	06.11
09 11 000 6114	06.13
09 11 000 6114	42.6
09 11 000 6116	06.11
09 11 000 6116	06.13
09 11 000 6116	42.6
09 11 000 6120	06.9
09 11 000 6121	06.9
09 11 000 6122	06.9
09 11 000 6123	06.9
09 11 000 6125	06.11
09 11 000 6125	06.13
09 11 000 6125	42.6
09 11 000 6126	14.15
09 11 000 6127	14.15
09 11 000 6128	14.15
09 11 000 6129	14.15
09 11 000 6131	06.16
09 11 000 6132	06.16
09 11 000 6133	06.16
09 11 000 6135	06.11
09 11 000 6135	06.13
09 11 000 6135	42.6
09 11 000 6139	14.22
09 11 000 6139	14.67
09 11 000 6140	14.22
09 11 000 6140	14.67
09 11 000 6141	14.22
09 11 000 6141	14.67
09 11 000 6142	14.22
09 11 000 6142	14.67
09 11 000 6143	14.22
09 11 000 6143	14.67
09 11 000 6144	14.22
09 11 000 6144	14.67
09 11 000 6156	14.23
09 11 000 6161	14.44
09 11 000 6162	14.44
09 11 000 6163	14.44
09 11 000 6164	14.44
09 11 000 6165	14.44
09 11 000 6168	14.44
09 11 000 6204	14.15
09 11 000 6212	06.13
09 11 000 6212	42.6
09 11 000 6213	06.13
09 11 000 6213	42.6
09 11 000 6214	06.11
09 11 000 6214	06.13
09 11 000 6214	42.6
09 11 000 6216	06.11
09 11 000 6216	06.13
09 11 000 6216	42.6
09 11 000 6220	06.9
09 11 000 6221	06.9
09 11 000 6222	06.9
09 11 000 6223	06.9
09 11 000 6225	06.11
09 11 000 6225	06.13
09 11 000 6225	42.6
09 11 000 6226	14.15
09 11 000 6227	14.15
09 11 000 6228	14.15
09 11 000 6229	14.15
09 11 000 6231	06.16
09 11 000 6232	06.16
09 11 000 6233	06.16
09 11 000 6235	06.11
09 11 000 6235	06.13
09 11 000 6235	42.6
09 11 000 6239	14.22
09 11 000 6239	14.67
09 11 000 6240	14.22
09 11 000 6240	14.67
09 11 000 6241	14.22
09 11 000 6241	14.67
09 11 000 6242	14.22
09 11 000 6242	14.67
09 11 000 6243	14.22
09 11 000 6243	14.67
09 11 000 6244	14.22
09 11 000 6244	14.67
09 11 000 6256	14.23
09 11 000 6261	14.44
09 11 000 6262	14.44
09 11 000 6263	14.44
09 11 000 6264	14.44
09 11 000 6265	14.44
09 11 000 6268	14.44
09 11 000 9925	14.17
09 11 000 9926	14.18
09 11 000 9937	14.19
09 11 000 9938	14.20
09 11 000 9951	14.25
09 11 000 9952	14.27
09 11 000 9954	14.41
09 11 000 9955	14.42
09 11 000 9956	14.29
09 11 000 9957	14.33
09 11 000 9957	14.35
09 11 000 9957	14.58
09 11 000 9958	14.33
09 11 000 9958	14.35
09 11 000 9958	14.58
09 11 000 9963	14.30
09 11 000 9963	14.32
09 11 000 9964	14.36
09 11 000 9964	14.39
09 11 000 9964	14.59
09 11 000 9965	14.37
09 11 000 9965	14.39
09 11 000 9965	14.59
09 11 000 9971	14.47
09 11 000 9972	14.48
09 11 000 9972	14.49
09 11 000 9973	14.50
09 11 000 9973	14.53
09 11 000 9973	14.51
09 11 000 9973	14.59
09 11 000 9974	14.50
09 11 000 9974	14.53
09 11 000 9974	14.52
09 11 000 9974	14.59
09 11 000 9980	14.69
09 11 000 9982	14.69
09 11 000 9987	14.68
09 11 000 9989	14.68
09 11 000 9991	14.68
09 11 000 9996	14.69
09 11 000 9997	14.69
09 11 000 9998	14.69
09 11 000 9999	14.69
09 11 001 2651	14.23
09 11 001 2652	14.23
09 11 001 2655	14.23
09 11 001 2671	14.45
09 11 001 2672	14.45
09 11 001 2675	14.45
09 11 001 2751	14.23
09 11 001 2752	14.23
09 11 001 2755	14.23
09 11 001 2771	14.45
09 11 001 2772	14.45
09 11 001 2775	14.45
09 11 001 3001	14.22
09 11 001 3012	14.44
09 11 001 3021	14.15
09 11 001 3101	14.22
09 11 001 3112	14.44
09 11 001 3121	14.15
09 11 003 3032	14.71
09 11 003 3132	14.71
09 12 000 9901	13.24
09 12 000 9901	29.7
09 12 000 9901	29.8
09 12 000 9901	29.9
09 12 000 9901	29.10
09 12 000 9902	13.24
09 12 000 9902	29.7
09 12 000 9902	29.8
09 12 000 9902	29.9
09 12 000 9902	29.10
09 12 000 9905	20.26
09 12 000 9905	20.26
09 12 000 9908	20.29
09 12 000 9908	20.29
09 12 000 9911	13.52
09 12 000 9912	13.52
09 12 000 9921	80.31
09 12 000 9922	13.3
09 12 000 9922	13.3
09 12 000 9922	13.5
09 12 000 9922	13.5
09 12 000 9922	13.7
09 12 000 9922	13.7
09 12 000 9922	13.9
09 12 000 9922	13.9
09 12 000 9924	13.11
09 12 000 9924	13.11
09 12 000 9924	13.13
09 12 000 9924	13.13
09 12 000 9924	13.32
09 12 000 9924	13.32
09 12 000 9958	06.63
09 12 000 9969	15.24

part numbers	page
09 12 000 9970	15.24
09 12 000 9971	15.24
09 12 000 9972	15.24
09 12 000 9973	15.24
09 12 000 9974	15.24
09 12 001 2774	19.23
09 12 001 2794	19.22
09 12 001 3071	19.23
09 12 001 3091	19.22
09 12 002 2651	13.7
09 12 002 2652	13.9
09 12 002 2653	13.7
09 12 002 2654	13.9
09 12 002 2751	13.7
09 12 002 2752	13.9
09 12 002 2753	13.7
09 12 002 2754	13.9
09 12 002 3051	13.3
09 12 002 3052	13.5
09 12 002 3151	13.3
09 12 002 3152	13.5
09 12 003 2770	19.20
09 12 003 2774	19.20
09 12 003 2776	19.21
09 12 003 3011	19.20
09 12 003 3021	19.20
09 12 003 3031	19.20
09 12 003 3051	13.11
09 12 003 3151	13.11
09 12 004 2601	19.12
09 12 004 2603	19.12
09 12 004 2606	19.12
09 12 004 2611	19.11
09 12 004 2701	19.12
09 12 004 2711	19.11
09 12 004 2713	19.11
09 12 004 2716	19.11
09 12 004 3051	13.13
09 12 004 3151	13.13
09 12 005 2633	13.19
09 12 005 2634	13.19
09 12 005 2733	13.19
09 12 005 2734	13.19
09 12 005 3001	13.21
09 12 005 3101	13.21
09 12 006 2611	19.7
09 12 006 2662	13.17
09 12 006 2663	13.17
09 12 006 2665	13.17
09 12 006 2666	13.17
09 12 006 2691	19.9
09 12 006 2692	19.9
09 12 006 2694	19.9
09 12 006 2695	19.9
09 12 006 2701	19.8
09 12 006 2762	13.17
09 12 006 2763	13.17
09 12 006 2765	13.17
09 12 006 2766	13.17
09 12 006 2791	19.9
09 12 006 2792	19.9
09 12 006 2794	19.9
09 12 006 2795	19.9
09 12 006 3001	19.8
09 12 006 3041	13.15
09 12 006 3111	19.7
09 12 006 3141	13.15
09 12 006 9901	20.23
09 12 006 9901	20.23
09 12 007 3001	13.24
09 12 007 3101	13.24
09 12 008 0301	13.46
09 12 008 0303	13.49
09 12 008 0327	13.41
09 12 008 0327	20.24
09 12 008 0327	20.33
09 12 008 0427	13.40
09 12 008 0428	13.40
09 12 008 0429	13.40
09 12 008 0527	13.40
09 12 008 0727	13.42
09 12 008 0728	13.42
09 12 008 0901	13.42
09 12 008 0902	13.41
09 12 008 2633	13.26
09 12 008 2634	13.26
09 12 008 2733	13.26
09 12 008 2734	13.26
09 12 008 3001	13.28
09 12 008 3101	13.28
09 12 008 4620	15.7
09 12 008 4650	15.9
09 12 008 4720	15.21
09 12 008 4751	15.19
09 12 008 4752	15.17
09 12 008 4760	15.23
09 12 008 4801	15.13
09 12 008 4802	15.15
09 12 008 4804	15.3
09 12 008 4806	15.3
09 12 008 4807	15.5
09 12 008 4811	15.13
09 12 008 4901	15.11
09 12 008 4951	15.11
09 12 008 5407	13.41
09 12 008 5408	13.41
09 12 008 9901	20.32
09 12 008 9901	20.32
09 12 011 3001	13.38
09 12 011 3111	13.38
09 12 012 3001	13.31
09 12 012 3002	20.35
09 12 012 3004	13.31
09 12 012 3101	13.31
09 12 012 3102	20.35
09 12 012 3104	13.31
09 12 012 9901	20.35
09 12 012 9901	20.35
09 12 017 3001	13.34
09 12 017 3101	13.34
09 12 021 3001	13.36
09 12 021 3101	13.36
09 12 708 0301	13.46
09 14 000 0304	06.118
09 14 000 0312	06.117
09 14 000 0313	06.118
09 14 000 6111	06.86
09 14 000 6111	06.88
09 14 000 6115	06.87
09 14 000 6121	06.86
09 14 000 6121	06.88
09 14 000 6151	06.91
09 14 000 6152	06.91
09 14 000 6153	06.91
09 14 000 6174	06.90
09 14 000 6211	06.86
09 14 000 6211	06.88
09 14 000 6215	06.87
09 14 000 6221	06.86
09 14 000 6221	06.88
09 14 000 6251	06.91
09 14 000 6252	06.91
09 14 000 6253	06.91
09 14 000 6256	06.91
09 14 000 6257	06.91
09 14 000 6258	06.91
09 14 000 6274	06.90
09 14 000 6279	06.90
09 14 000 9901	80.25
09 14 000 9908	80.24
09 14 000 9909	80.24
09 14 000 9912	06.117
09 14 000 9915	06.78
09 14 000 9915	06.78
09 14 000 9915	06.80
09 14 000 9915	06.80
09 14 000 9924	06.110
09 14 000 9928	06.111
09 14 000 9929	06.114
09 14 000 9929	06.116
09 14 000 9930	06.56
09 14 000 9931	06.56
09 14 000 9932	06.56
09 14 000 9933	06.56
09 14 000 9936	06.104
09 14 000 9936	16.29
09 14 000 9938	42.9
09 14 000 9940	80.8
09 14 000 9947	06.107
09 14 000 9950	06.117
09 14 000 9953	80.32
09 14 000 9954	80.32
09 14 000 9960	06.117
09 14 000 9965	06.93
09 14 000 9965	06.93
09 14 000 9966	06.62
09 14 000 9971	06.108
09 14 000 9972	06.108
09 14 000 9973	06.108
09 14 000 9974	06.108
09 14 001 0301	06.107
09 14 001 0311	06.106
09 14 001 0320	06.113
09 14 001 0321	06.115
09 14 001 0330	42.8
09 14 001 0420	06.113
09 14 001 0421	06.115
09 14 001 0422	06.113
09 14 001 0423	06.115
09 14 001 0430	42.8
09 14 001 0720	06.114
09 14 001 0721	06.116
09 14 001 0722	06.114
09 14 001 0723	06.116
09 14 001 0730	42.8
09 14 001 2662	06.8
09 14 001 2663	06.8
09 14 001 2667	06.9
09 14 001 2668	06.9
09 14 001 2762	06.8
09 14 001 2763	06.8
09 14 001 2767	06.9
09 14 001 2768	06.9
09 14 001 3001	06.8
09 14 001 3011	06.69
09 14 001 3011	06.71
09 14 001 3011	06.73
09 14 001 3031	06.13
09 14 001 3032	42.6
09 14 001 3101	06.8
09 14 001 3111	06.69
09 14 001 3111	06.71
09 14 001 3111	06.73
09 14 001 3131	06.13
09 14 001 3132	42.6
09 14 001 4601	06.59
09 14 001 4611	06.60
09 14 001 4622	06.63
09 14 001 4623	06.62
09 14 001 4623	06.64
09 14 001 4651	06.59
09 14 001 4701	06.59
09 14 001 4703	06.59
09 14 001 4711	06.60
09 14 001 4721	06.61
09 14 001 5401	06.107
09 14 001 5402	06.106
09 14 001 9901	42.8
09 14 002 0301	06.111
09 14 002 0311	06.110
09 14 002 2601	06.20
09 14 002 2602	06.20
09 14 002 2603	20.19
09 14 002 2641	06.15
09 14 002 2642	06.15
09 14 002 2646	06.16
09 14 002 2647	06.16
09 14 002 2650	06.11
09 14 002 2651	06.11
09 14 002 2653	06.11
09 14 002 2701	06.20
09 14 002 2702	06.20
09 14 002 2703	20.19
09 14 002 2741	06.16
09 14 002 2742	06.16
09 14 002 2750	06.11
09 14 002 2751	06.11
09 14 002 2753	06.11
09 14 002 3001	06.78
09 14 002 3001	06.80
09 14 002 3001	06.82
09 14 002 3001	06.84
09 14 002 3002	06.20

List of part numbers

part numbers	page
09 14 002 3021	06.45
09 14 002 3023	06.44
09 14 002 3025	06.47
09 14 002 3041	06.15
09 14 002 3051	06.11
09 14 002 3101	06.78
09 14 002 3101	06.80
09 14 002 3101	06.82
09 14 002 3101	06.84
09 14 002 3102	06.20
09 14 002 3121	06.45
09 14 002 3123	06.44
09 14 002 3125	06.47
09 14 002 3141	06.15
09 14 002 3151	06.11
09 14 002 4501	06.90
09 14 002 4501	06.90
09 14 002 5401	06.111
09 14 003 2601	06.22
09 14 003 2602	06.22
09 14 003 2701	06.22
09 14 003 2702	06.22
09 14 003 3001	06.22
09 14 003 3101	06.22
09 14 003 4501	06.91
09 14 003 4501	06.91
09 14 004 3041	06.24
09 14 004 3141	06.24
09 14 004 4501	06.86
09 14 004 4501	06.87
09 14 004 4512	06.86
09 14 004 4513	06.87
09 14 004 4701	06.93
09 14 004 4711	06.93
09 14 005 2601	06.32
09 14 005 2616	06.42
09 14 005 2617	06.42
09 14 005 2646	06.18
09 14 005 2647	06.18
09 14 005 2701	06.32
09 14 005 2716	06.42
09 14 005 2717	06.42
09 14 005 2741	06.18
09 14 005 2742	06.18
09 14 006 0303	06.97
09 14 006 0313	06.97
09 14 006 1701	06.102
09 14 006 1701	16.27
09 14 006 1711	06.102
09 14 006 1711	16.27
09 14 006 2633	06.29
09 14 006 2733	06.29
09 14 006 3001	06.29
09 14 006 3001	16.31
09 14 006 3041	06.34
09 14 006 3041	16.33
09 14 006 3101	06.29
09 14 006 3101	16.31
09 14 006 3141	06.34
09 14 006 3141	16.33
09 14 006 4701	06.95
09 14 006 4711	06.95

part numbers	page
09 14 007 3001	06.26
09 14 007 3101	06.26
09 14 008 2633	06.37
09 14 008 2634	06.37
09 14 008 2733	06.37
09 14 008 2734	06.37
09 14 008 3001	06.37
09 14 008 3001	16.35
09 14 008 3011	06.69
09 14 008 3016	06.73
09 14 008 3017	06.73
09 14 008 3101	06.37
09 14 008 3101	16.35
09 14 008 3111	06.69
09 14 008 3116	06.73
09 14 008 3117	06.73
09 14 009 3001	06.56
09 14 009 3101	06.56
09 14 009 3151	06.56
09 14 010 0303	06.98
09 14 010 0313	06.98
09 14 010 1701	06.102
09 14 010 1701	16.27
09 14 010 1711	06.102
09 14 010 1711	16.27
09 14 012 2632	06.49
09 14 012 2634	06.49
09 14 012 2732	06.49
09 14 012 2734	06.49
09 14 012 3001	06.49
09 14 012 3001	16.39
09 14 012 3101	06.49
09 14 012 3101	16.39
09 14 012 4501	06.88
09 14 012 4512	06.88
09 14 016 0303	06.99
09 14 016 0313	06.99
09 14 016 1701	06.103
09 14 016 1701	16.28
09 14 016 1711	06.103
09 14 016 1711	16.28
09 14 017 3001	06.52
09 14 017 3001	16.41
09 14 017 3101	06.52
09 14 017 3101	16.41
09 14 020 3001	06.40
09 14 020 3001	16.37
09 14 020 3013	06.71
09 14 020 3101	06.40
09 14 020 3101	16.37
09 14 020 3113	06.71
09 14 024 0303	06.100
09 14 024 0313	06.100
09 14 024 1701	06.103
09 14 024 1701	16.28
09 14 024 1711	06.103
09 14 024 1711	16.28
09 14 025 3001	06.54

part numbers	page
09 14 025 3101	06.54
09 14 206 0303	06.97
09 14 206 0303	16.22
09 14 206 0313	06.97
09 14 206 0313	16.22
09 14 210 0303	06.98
09 14 210 0303	16.23
09 14 210 0313	06.98
09 14 210 0313	16.23
09 14 216 0303	06.99
09 14 216 0303	16.24
09 14 216 0313	06.99
09 14 216 0313	16.24
09 14 224 0303	06.100
09 14 224 0303	16.25
09 14 224 0313	06.100
09 14 224 0313	16.25
09 15 000 6101	02.23
09 15 000 6101	02.14
09 15 000 6101	05.11
09 15 000 6101	05.20
09 15 000 6101	05.23
09 15 000 6101	06.52
09 15 000 6101	06.26
09 15 000 6101	06.50
09 15 000 6101	13.15
09 15 000 6101	13.24
09 15 000 6101	13.34
09 15 000 6101	13.32
09 15 000 6102	02.23
09 15 000 6102	02.14
09 15 000 6102	05.11
09 15 000 6102	05.20
09 15 000 6102	05.23
09 15 000 6102	06.52
09 15 000 6102	06.26
09 15 000 6102	06.50
09 15 000 6102	13.15
09 15 000 6102	13.24
09 15 000 6102	13.34
09 15 000 6102	13.32
09 15 000 6103	02.23
09 15 000 6103	02.14
09 15 000 6103	05.11
09 15 000 6103	05.20
09 15 000 6103	05.23
09 15 000 6103	06.52
09 15 000 6103	06.26
09 15 000 6103	06.50
09 15 000 6103	13.15
09 15 000 6103	13.24
09 15 000 6103	13.34
09 15 000 6103	13.32
09 15 000 6104	02.23
09 15 000 6104	02.14
09 15 000 6104	05.11
09 15 000 6104	05.20
09 15 000 6104	05.23
09 15 000 6104	06.52
09 15 000 6104	06.26
09 15 000 6104	06.50
09 15 000 6104	13.15

part numbers	page
09 15 000 6104	13.24
09 15 000 6104	13.34
09 15 000 6104	13.32
09 15 000 6105	02.23
09 15 000 6105	02.14
09 15 000 6105	05.11
09 15 000 6105	05.20
09 15 000 6105	05.23
09 15 000 6105	06.52
09 15 000 6105	06.26
09 15 000 6105	06.50
09 15 000 6105	13.15
09 15 000 6105	13.24
09 15 000 6105	13.34
09 15 000 6105	13.32
09 15 000 6106	02.23
09 15 000 6106	02.14
09 15 000 6106	05.11
09 15 000 6106	05.20
09 15 000 6106	05.23
09 15 000 6106	06.52
09 15 000 6106	06.26
09 15 000 6106	06.50
09 15 000 6106	13.15
09 15 000 6106	13.24
09 15 000 6106	13.34
09 15 000 6106	13.32
09 15 000 6121	02.23
09 15 000 6121	02.14
09 15 000 6121	05.11
09 15 000 6121	05.20
09 15 000 6121	05.23
09 15 000 6121	06.52
09 15 000 6121	06.78
09 15 000 6121	06.82
09 15 000 6121	06.26
09 15 000 6121	06.50
09 15 000 6121	06.74
09 15 000 6121	13.15
09 15 000 6121	13.24
09 15 000 6121	13.34
09 15 000 6121	13.31
09 15 000 6121	19.14
09 15 000 6121	19.15
09 15 000 6121	19.17
09 15 000 6122	02.23
09 15 000 6122	02.14
09 15 000 6122	05.11
09 15 000 6122	05.20
09 15 000 6122	05.23
09 15 000 6122	06.52
09 15 000 6122	06.78
09 15 000 6122	06.82
09 15 000 6122	06.26
09 15 000 6122	06.50
09 15 000 6122	06.74
09 15 000 6122	13.15
09 15 000 6122	13.24
09 15 000 6122	13.34
09 15 000 6122	13.31
09 15 000 6122	19.14
09 15 000 6122	19.15
09 15 000 6122	19.17
09 15 000 6123	02.23
09 15 000 6123	02.14
09 15 000 6123	05.11
09 15 000 6123	05.20

part numbers	page	part numbers	page	part numbers	page	part numbers	page
09 15 000 6123	05.23	09 15 000 6126	19.17	09 15 000 6205	13.34	09 15 000 6223	19.17
09 15 000 6123	06.52	09 15 000 6161	41.2	09 15 000 6205	13.32	09 15 000 6224	02.23
09 15 000 6123	06.78	09 15 000 6171	41.2	09 15 000 6206	02.23	09 15 000 6224	02.14
09 15 000 6123	06.82	09 15 000 6190	20.29	09 15 000 6206	02.14	09 15 000 6224	05.11
09 15 000 6123	06.26	09 15 000 6191	20.14	09 15 000 6206	05.11	09 15 000 6224	05.20
09 15 000 6123	06.50	09 15 000 6191	20.15	09 15 000 6206	05.20	09 15 000 6224	05.23
09 15 000 6123	06.74	09 15 000 6191	20.23	09 15 000 6206	05.23	09 15 000 6224	06.52
09 15 000 6123	13.15	09 15 000 6191	20.35	09 15 000 6206	06.52	09 15 000 6224	06.78
09 15 000 6123	13.24	09 15 000 6197	20.17	09 15 000 6206	06.26	09 15 000 6224	06.82
09 15 000 6123	13.34	09 15 000 6201	02.23	09 15 000 6206	06.50	09 15 000 6224	06.26
09 15 000 6123	13.31	09 15 000 6201	02.14	09 15 000 6206	13.15	09 15 000 6224	06.50
09 15 000 6123	19.14	09 15 000 6201	05.11	09 15 000 6206	13.24	09 15 000 6224	06.74
09 15 000 6123	19.15	09 15 000 6201	05.20	09 15 000 6206	13.34	09 15 000 6224	13.15
09 15 000 6123	19.17	09 15 000 6201	05.23	09 15 000 6206	13.32	09 15 000 6224	13.24
09 15 000 6124	02.23	09 15 000 6201	06.52	09 15 000 6221	02.23	09 15 000 6224	13.34
09 15 000 6124	02.14	09 15 000 6201	06.26	09 15 000 6221	02.14	09 15 000 6224	13.31
09 15 000 6124	05.11	09 15 000 6201	06.50	09 15 000 6221	05.11	09 15 000 6224	19.14
09 15 000 6124	05.20	09 15 000 6201	13.15	09 15 000 6221	05.20	09 15 000 6224	19.15
09 15 000 6124	05.23	09 15 000 6201	13.24	09 15 000 6221	05.23	09 15 000 6224	19.17
09 15 000 6124	06.52	09 15 000 6201	13.34	09 15 000 6221	06.52	09 15 000 6225	02.23
09 15 000 6124	06.78	09 15 000 6201	13.32	09 15 000 6221	06.78	09 15 000 6225	02.14
09 15 000 6124	06.82	09 15 000 6202	02.23	09 15 000 6221	06.82	09 15 000 6225	05.11
09 15 000 6124	06.26	09 15 000 6202	02.14	09 15 000 6221	06.26	09 15 000 6225	05.20
09 15 000 6124	06.50	09 15 000 6202	05.11	09 15 000 6221	06.50	09 15 000 6225	05.23
09 15 000 6124	06.74	09 15 000 6202	05.20	09 15 000 6221	06.74	09 15 000 6225	06.52
09 15 000 6124	13.15	09 15 000 6202	05.23	09 15 000 6221	13.15	09 15 000 6225	06.78
09 15 000 6124	13.24	09 15 000 6202	06.52	09 15 000 6221	13.24	09 15 000 6225	06.82
09 15 000 6124	13.34	09 15 000 6202	06.26	09 15 000 6221	13.34	09 15 000 6225	06.26
09 15 000 6124	13.31	09 15 000 6202	06.50	09 15 000 6221	13.31	09 15 000 6225	06.50
09 15 000 6124	19.14	09 15 000 6202	13.15	09 15 000 6221	19.14	09 15 000 6225	06.74
09 15 000 6124	19.15	09 15 000 6202	13.24	09 15 000 6221	19.15	09 15 000 6225	13.15
09 15 000 6124	19.17	09 15 000 6202	13.34	09 15 000 6221	19.17	09 15 000 6225	13.24
09 15 000 6125	02.23	09 15 000 6202	13.32	09 15 000 6222	02.23	09 15 000 6225	13.34
09 15 000 6125	02.14	09 15 000 6203	02.23	09 15 000 6222	02.14	09 15 000 6225	13.31
09 15 000 6125	05.11	09 15 000 6203	02.14	09 15 000 6222	05.11	09 15 000 6225	19.14
09 15 000 6125	05.20	09 15 000 6203	05.11	09 15 000 6222	05.20	09 15 000 6225	19.15
09 15 000 6125	05.23	09 15 000 6203	05.20	09 15 000 6222	05.23	09 15 000 6225	19.17
09 15 000 6125	06.52	09 15 000 6203	05.23	09 15 000 6222	06.52	09 15 000 6226	02.23
09 15 000 6125	06.78	09 15 000 6203	06.52	09 15 000 6222	06.78	09 15 000 6226	02.14
09 15 000 6125	06.82	09 15 000 6203	06.26	09 15 000 6222	06.82	09 15 000 6226	05.11
09 15 000 6125	06.26	09 15 000 6203	06.50	09 15 000 6222	06.26	09 15 000 6226	05.20
09 15 000 6125	06.50	09 15 000 6203	13.15	09 15 000 6222	06.50	09 15 000 6226	05.23
09 15 000 6125	06.74	09 15 000 6203	13.24	09 15 000 6222	06.74	09 15 000 6226	06.52
09 15 000 6125	13.15	09 15 000 6203	13.34	09 15 000 6222	13.15	09 15 000 6226	06.78
09 15 000 6125	13.24	09 15 000 6203	13.32	09 15 000 6222	13.24	09 15 000 6226	06.82
09 15 000 6125	13.34	09 15 000 6204	02.23	09 15 000 6222	13.34	09 15 000 6226	06.26
09 15 000 6125	13.31	09 15 000 6204	02.14	09 15 000 6222	13.31	09 15 000 6226	06.50
09 15 000 6125	19.14	09 15 000 6204	05.11	09 15 000 6222	19.14	09 15 000 6226	06.74
09 15 000 6125	19.15	09 15 000 6204	05.20	09 15 000 6222	19.15	09 15 000 6226	13.15
09 15 000 6125	19.17	09 15 000 6204	05.23	09 15 000 6222	19.17	09 15 000 6226	13.24
09 15 000 6126	02.23	09 15 000 6204	06.52	09 15 000 6223	02.23	09 15 000 6226	13.34
09 15 000 6126	02.14	09 15 000 6204	06.26	09 15 000 6223	02.14	09 15 000 6226	13.31
09 15 000 6126	05.11	09 15 000 6204	06.50	09 15 000 6223	05.11	09 15 000 6226	19.14
09 15 000 6126	05.20	09 15 000 6204	13.15	09 15 000 6223	05.20	09 15 000 6226	19.15
09 15 000 6126	05.23	09 15 000 6204	13.24	09 15 000 6223	05.23	09 15 000 6226	19.17
09 15 000 6126	06.52	09 15 000 6204	13.34	09 15 000 6223	06.52	09 15 000 6261	41.2
09 15 000 6126	06.78	09 15 000 6204	13.32	09 15 000 6223	06.78	09 15 000 6271	41.2
09 15 000 6126	06.82	09 15 000 6205	02.23	09 15 000 6223	06.82	09 15 000 6290	20.29
09 15 000 6126	06.26	09 15 000 6205	02.14	09 15 000 6223	06.26	09 15 000 6291	20.14
09 15 000 6126	06.50	09 15 000 6205	05.11	09 15 000 6223	06.50	09 15 000 6291	20.17
09 15 000 6126	06.74	09 15 000 6205	05.20	09 15 000 6223	06.74	09 15 000 6293	20.23
09 15 000 6126	13.15	09 15 000 6205	05.23	09 15 000 6223	13.15	09 15 000 6294	20.15
09 15 000 6126	13.24	09 15 000 6205	06.52	09 15 000 6223	13.24	09 15 000 6297	20.35
09 15 000 6126	13.34	09 15 000 6205	06.26	09 15 000 6223	13.34		
09 15 000 6126	13.31	09 15 000 6205	06.50	09 15 000 6223	13.31	09 15 001 3013	06.82
09 15 000 6126	19.14	09 15 000 6205	13.15	09 15 000 6223	19.14	09 15 001 3013	19.17
09 15 000 6126	19.15	09 15 000 6205	13.24	09 15 000 6223	19.15	09 15 001 3023	06.84

List of part numbers

part numbers	page
09 15 001 3023	19.18
09 15 001 3113	06.82
09 15 001 3113	19.17
09 15 001 3123	06.84
09 15 001 3123	19.18
09 15 003 3001	19.14
09 15 003 3101	19.14
09 15 004 3013	06.78
09 15 004 3013	19.15
09 15 004 3113	06.78
09 15 004 3113	19.15
09 15 008 3013	06.80
09 15 008 3013	19.16
09 15 008 3113	06.80
09 15 008 3113	19.16
09 15 200 6121	16.11
09 15 200 6121	16.39
09 15 200 6121	16.41
09 15 200 6122	16.11
09 15 200 6122	16.39
09 15 200 6122	16.41
09 15 200 6123	16.11
09 15 200 6123	16.39
09 15 200 6123	16.41
09 15 200 6124	16.11
09 15 200 6124	16.39
09 15 200 6124	16.41
09 15 200 6125	16.11
09 15 200 6125	16.39
09 15 200 6125	16.41
09 15 200 6126	16.11
09 15 200 6126	16.39
09 15 200 6126	16.41
09 15 200 6221	16.11
09 15 200 6221	16.39
09 15 200 6221	16.41
09 15 200 6222	16.11
09 15 200 6222	16.39
09 15 200 6222	16.41
09 15 200 6223	16.11
09 15 200 6223	16.39
09 15 200 6223	16.41
09 15 200 6224	16.11
09 15 200 6224	16.39
09 15 200 6224	16.41
09 15 200 6225	16.11
09 15 200 6225	16.39
09 15 200 6225	16.41
09 15 200 6226	16.11
09 15 200 6226	16.39
09 15 200 6226	16.41
09 16 000 9903	80.31
09 16 000 9905	20.14
09 16 000 9905	20.14
09 16 000 9905	20.15
09 16 000 9905	20.15
09 16 000 9905	20.17
09 16 000 9905	20.17
09 16 000 9908	20.14
09 16 000 9908	20.14
09 16 000 9908	20.15
09 16 000 9908	20.15

part numbers	page
09 16 000 9915	20.17
09 16 000 9915	20.17
09 16 024 3001	02.17
09 16 024 3101	02.17
09 16 042 3001	02.18
09 16 042 3101	02.18
09 16 072 3001	02.19
09 16 072 3001	02.21
09 16 072 3011	02.21
09 16 072 3101	02.19
09 16 072 3101	02.21
09 16 072 3111	02.21
09 16 108 3001	02.20
09 16 108 3001	02.22
09 16 108 3011	02.22
09 16 108 3101	02.20
09 16 108 3101	02.22
09 16 108 3111	02.22
09 16 208 3001	16.10
09 16 208 3101	16.10
09 16 224 3001	16.7
09 16 224 3101	16.7
09 16 242 3001	16.8
09 16 242 3101	16.8
09 16 272 3001	16.9
09 16 272 3101	16.9
09 20 000 9918	80.31
09 20 000 9919	80.32
09 20 000 9925	80.2
09 20 000 9925	80.3
09 20 000 9928	80.2
09 20 000 9929	80.2
09 20 000 9931	80.3
09 20 000 9932	80.2
09 20 000 9933	11.13
09 20 000 9991	80.8
09 20 000 9992	80.8
09 20 000 9993	80.8
09 20 000 9994	80.8
09 20 000 9995	80.31
09 20 000 9996	80.9
09 20 000 9997	80.9
09 20 003 0301	19.28
09 20 003 0301	20.30
09 20 003 0301	31.6
09 20 003 0305	31.6
09 20 003 0306	31.6
09 20 003 0320	19.32
09 20 003 0320	31.12
09 20 003 0327	19.33
09 20 003 0327	31.12
09 20 003 0801	31.7
09 20 003 0810	31.7
09 20 003 0820	19.32
09 20 003 0820	31.12
09 20 003 0827	19.33
09 20 003 0827	31.12

part numbers	page
09 20 003 2611	01.3
09 20 003 2633	01.3
09 20 003 2634	01.3
09 20 003 2711	01.3
09 20 003 2733	01.3
09 20 003 2734	01.3
09 20 003 5407	31.14
09 20 003 5408	19.34
09 20 003 5408	31.15
09 20 003 5409	19.34
09 20 003 5409	31.15
09 20 003 5421	31.5
09 20 003 5422	19.28
09 20 003 5422	31.6
09 20 003 5425	19.29
09 20 003 5425	31.9
09 20 003 5426	31.9
09 20 003 5427	19.29
09 20 003 5427	31.8
09 20 003 5428	31.8
09 20 003 5441	31.12
09 20 003 5442	19.32
09 20 003 5442	31.12
09 20 003 5445	19.33
09 20 003 5445	31.14
09 20 003 5446	31.14
09 20 003 5447	19.33
09 20 003 5447	31.13
09 20 003 5448	31.13
09 20 003 5449	19.34
09 20 003 5449	31.14
09 20 003 5450	31.14
09 20 004 2611	01.4
09 20 004 2633	01.4
09 20 004 2634	01.4
09 20 004 2711	01.4
09 20 004 2733	01.4
09 20 004 2734	01.4
09 20 004 4701	19.25
09 20 004 4711	19.25
09 20 010 0301	31.18
09 20 010 0321	31.18
09 20 010 0801	31.17
09 20 010 2612	01.6
09 20 010 2614	01.6
09 20 010 2812	01.6
09 20 010 2814	01.6
09 20 010 3001	01.6
09 20 010 3101	01.6
09 20 010 5423	31.18
09 20 010 5423	31.18
09 20 010 5425	31.19
09 20 010 5425	31.19
09 20 016 0301	31.21
09 20 016 0321	31.21
09 20 016 0801	31.20
09 20 016 2612	01.7
09 20 016 2612	01.9
09 20 016 2613	01.9
09 20 016 2614	01.7
09 20 016 2614	01.10
09 20 016 2615	01.10
09 20 016 2691	41.5
09 20 016 2812	01.7

part numbers	page
09 20 016 2812	01.9
09 20 016 2813	01.9
09 20 016 2814	01.7
09 20 016 2814	01.10
09 20 016 2815	01.10
09 20 016 2891	41.5
09 20 016 3001	01.7
09 20 016 3001	01.8
09 20 016 3011	01.8
09 20 016 3101	01.7
09 20 016 3101	01.8
09 20 016 3111	01.8
09 20 016 5423	31.21
09 20 016 5423	31.21
09 20 016 5425	31.22
09 20 016 5425	31.22
09 20 032 0301	31.24
09 20 032 0302	31.24
09 20 032 5401	31.25
09 20 032 5401	31.25
09 20 032 5405	31.25
09 20 032 5405	31.25
09 21 000 9906	80.9
09 21 000 9971	08.26
09 21 007 2632	02.3
09 21 007 2732	02.3
09 21 007 3031	02.3
09 21 007 3131	02.3
09 21 015 2601	02.7
09 21 015 2701	02.7
09 21 015 3001	02.7
09 21 015 3101	02.7
09 21 025 2601	02.8
09 21 025 2601	02.10
09 21 025 2701	02.8
09 21 025 2701	02.10
09 21 025 3001	02.8
09 21 025 3001	02.10
09 21 025 3101	02.8
09 21 025 3101	02.10
09 21 040 2601	02.9
09 21 040 2601	02.12
09 21 040 2701	02.9
09 21 040 2701	02.12
09 21 040 3001	02.9
09 21 040 3001	02.12
09 21 040 3101	02.9
09 21 040 3101	02.12
09 21 040 4601	08.5
09 21 040 4602	08.5
09 21 040 4611	08.6
09 21 040 4612	08.6
09 21 040 4701	08.5
09 21 040 4702	08.5
09 21 040 4711	08.6
09 21 040 4712	08.6
09 21 064 2601	02.11
09 21 064 2601	02.13
09 21 064 2701	02.11
09 21 064 2701	02.13

part numbers	page
09 21 064 3001	02.11
09 21 064 3001	02.13
09 21 064 3101	02.11
09 21 064 3101	02.13
09 21 064 4601	08.7
09 21 064 4602	08.7
09 21 064 4611	08.8
09 21 064 4612	08.8
09 21 064 4701	08.7
09 21 064 4702	08.7
09 21 064 4711	08.8
09 21 064 4712	08.8
09 21 240 3001	16.4
09 21 240 3101	16.4
09 21 264 3001	16.5
09 21 264 3101	16.5
09 30 000 9801	80.8
09 30 000 9802	80.8
09 30 000 9803	80.8
09 30 000 9804	80.8
09 30 000 9901	80.25
09 30 000 9903	80.8
09 30 000 9933	80.9
09 30 000 9934	80.9
09 30 000 9935	80.9
09 30 000 9936	80.9
09 30 000 9941	80.9
09 30 000 9942	80.9
09 30 000 9943	80.9
09 30 000 9944	80.9
09 30 000 9958	80.35
09 30 000 9963	80.9
09 30 000 9964	80.33
09 30 000 9965	80.4
09 30 000 9966	80.4
09 30 000 9967	80.5
09 30 000 9968	80.6
09 30 000 9969	80.6
09 30 000 9970	80.4
09 30 000 9971	80.4
09 30 000 9972	80.5
09 30 000 9973	80.6
09 30 000 9974	80.6
09 30 000 9986	80.35
09 30 000 9987	80.35
09 30 000 9995	80.9
09 30 000 9996	80.8
09 30 000 9997	80.31
09 30 006 0301	31.28
09 30 006 0302	31.28
09 30 006 0318	31.28
09 30 006 0381	31.32
09 30 006 0801	31.27
09 30 006 1301	31.29
09 30 006 1701	16.51
09 30 006 1701	80.27
09 30 006 5401	31.31
09 30 006 5401	31.31
09 30 006 5403	80.33
09 30 006 5404	31.31
09 30 006 5404	31.31
09 30 006 5410	80.33
09 30 006 5423	31.28

part numbers	page
09 30 006 5423	31.28
09 30 006 5425	31.31
09 30 006 5425	31.31
09 30 006 5427	31.30
09 30 006 5427	31.30
09 30 010 0301	31.34
09 30 010 0302	31.38
09 30 010 0303	31.41
09 30 010 0305	31.41
09 30 010 0317	31.38
09 30 010 0318	31.42
09 30 010 0381	31.44
09 30 010 0801	31.34
09 30 010 0803	31.41
09 30 010 0901	31.78
09 30 010 0902	31.78
09 30 010 0961	31.78
09 30 010 1301	31.34
09 30 010 1701	16.51
09 30 010 1701	80.27
09 30 010 5401	31.36
09 30 010 5401	31.36
09 30 010 5404	80.33
09 30 010 5406	31.79
09 30 010 5406	31.79
09 30 010 5406	31.36
09 30 010 5406	31.36
09 30 010 5407	31.35
09 30 010 5407	31.35
09 30 010 5410	80.33
09 30 010 5412	31.43
09 30 010 5412	31.43
09 30 010 5423	31.34
09 30 010 5423	31.34
09 30 010 5425	31.36
09 30 010 5425	31.36
09 30 010 5427	31.35
09 30 010 5427	31.35
09 30 010 5432	31.41
09 30 010 5432	31.41
09 30 010 5457	31.38
09 30 010 5457	31.38
09 30 016 0301	31.47
09 30 016 0302	31.51
09 30 016 0306	31.53
09 30 016 0307	31.53
09 30 016 0318	31.54
09 30 016 0381	31.56
09 30 016 0408	80.11
09 30 016 0801	31.46
09 30 016 0803	31.53
09 30 016 1301	31.47
09 30 016 1701	16.51
09 30 016 1701	80.27
09 30 016 4411	31.46
09 30 016 4431	31.51
09 30 016 4441	31.52
09 30 016 5401	31.49
09 30 016 5401	31.49
09 30 016 5404	80.33
09 30 016 5405	31.48
09 30 016 5405	31.48
09 30 016 5406	31.48
09 30 016 5406	31.48
09 30 016 5410	80.33

part numbers	page
09 30 016 5422	31.47
09 30 016 5422	31.47
09 30 016 5425	31.48
09 30 016 5425	31.48
09 30 016 5426	31.48
09 30 016 5426	31.48
09 30 016 5432	31.53
09 30 016 5432	31.53
09 30 016 9901	80.10
09 30 024 0301	31.59
09 30 024 0302	31.63
09 30 024 0304	31.65
09 30 024 0307	31.65
09 30 024 0318	31.65
09 30 024 0381	31.68
09 30 024 0408	80.11
09 30 024 0801	31.58
09 30 024 0803	31.64
09 30 024 1301	31.59
09 30 024 1701	16.51
09 30 024 1701	80.27
09 30 024 4411	31.58
09 30 024 5401	31.58
09 30 024 5401	31.58
09 30 024 5404	80.33
09 30 024 5405	31.60
09 30 024 5405	31.60
09 30 024 5406	31.61
09 30 024 5406	31.61
09 30 024 5410	80.33
09 30 024 5422	31.59
09 30 024 5422	31.59
09 30 024 5425	31.60
09 30 024 5425	31.60
09 30 024 5426	31.61
09 30 024 5426	31.61
09 30 024 5432	31.65
09 30 024 5432	31.65
09 30 024 5436	31.66
09 30 024 5436	31.66
09 30 024 5442	31.59
09 30 024 5442	31.59
09 30 032 0301	31.69
09 30 032 5420	31.69
09 30 032 5420	31.69
09 30 032 5425	31.70
09 30 032 5425	31.70
09 30 032 5426	31.70
09 30 032 5426	31.70
09 30 032 5427	31.70
09 30 032 5427	31.70
09 30 048 0301	31.71
09 30 048 0317	31.72
09 30 210 0305	16.44
09 30 210 0803	16.44
09 30 216 0307	16.47
09 30 216 0803	16.46
09 30 224 0307	16.49
09 30 224 0803	16.48
09 30 410 0901	31.78

part numbers	page
09 30 410 0909	31.78
09 30 410 0921	31.78
09 30 410 0951	31.78
09 30 410 0960	31.78
09 30 410 0970	31.78
09 30 410 0971	31.78
09 30 410 0974	31.78
09 30 410 0983	31.78
09 31 006 2601	07.3
09 31 006 2601	07.4
09 31 006 2611	07.4
09 31 006 2701	07.3
09 31 006 2701	07.4
09 31 006 2711	07.4
09 32 000 6104	05.21
09 32 000 6104	05.24
09 32 000 6104	06.20
09 32 000 6104	06.22
09 32 000 6104	06.24
09 32 000 6104	06.44
09 32 000 6104	06.27
09 32 000 6104	13.3
09 32 000 6104	13.5
09 32 000 6104	13.11
09 32 000 6104	13.13
09 32 000 6104	13.15
09 32 000 6105	05.21
09 32 000 6105	05.24
09 32 000 6105	06.20
09 32 000 6105	06.22
09 32 000 6105	06.24
09 32 000 6105	06.44
09 32 000 6105	06.27
09 32 000 6105	13.3
09 32 000 6105	13.5
09 32 000 6105	13.11
09 32 000 6105	13.13
09 32 000 6105	13.15
09 32 000 6107	05.21
09 32 000 6107	05.24
09 32 000 6107	06.20
09 32 000 6107	06.22
09 32 000 6107	06.24
09 32 000 6107	06.44
09 32 000 6107	06.27
09 32 000 6107	13.3
09 32 000 6107	13.5
09 32 000 6107	13.11
09 32 000 6107	13.13
09 32 000 6107	13.15
09 32 000 6108	05.21
09 32 000 6108	05.24
09 32 000 6108	06.20
09 32 000 6108	06.22
09 32 000 6108	06.24
09 32 000 6108	06.44
09 32 000 6108	06.27
09 32 000 6108	13.3
09 32 000 6108	13.5
09 32 000 6108	13.11
09 32 000 6108	13.13
09 32 000 6108	13.15
09 32 000 6109	06.20
09 32 000 6109	06.22
09 32 000 6109	06.44

part numbers	page
09 32 000 6109	13.3
09 32 000 6109	13.5
09 32 000 6109	13.11
09 32 000 6109	13.13
09 32 000 6180	20.23
09 32 000 6204	05.21
09 32 000 6204	05.24
09 32 000 6204	06.20
09 32 000 6204	06.22
09 32 000 6204	06.24
09 32 000 6204	06.44
09 32 000 6204	06.27
09 32 000 6204	13.3
09 32 000 6204	13.5
09 32 000 6204	13.11
09 32 000 6204	13.13
09 32 000 6204	13.15
09 32 000 6205	05.21
09 32 000 6205	05.24
09 32 000 6205	06.20
09 32 000 6205	06.22
09 32 000 6205	06.24
09 32 000 6205	06.44
09 32 000 6205	06.27
09 32 000 6205	13.3
09 32 000 6205	13.5
09 32 000 6205	13.11
09 32 000 6205	13.13
09 32 000 6205	13.15
09 32 000 6207	05.21
09 32 000 6207	05.24
09 32 000 6207	06.20
09 32 000 6207	06.22
09 32 000 6207	06.24
09 32 000 6207	06.44
09 32 000 6207	06.27
09 32 000 6207	13.3
09 32 000 6207	13.5
09 32 000 6207	13.11
09 32 000 6207	13.13
09 32 000 6207	13.15
09 32 000 6208	05.21
09 32 000 6208	05.24
09 32 000 6208	06.20
09 32 000 6208	06.22
09 32 000 6208	06.24
09 32 000 6208	06.44
09 32 000 6208	06.27
09 32 000 6208	13.3
09 32 000 6208	13.5
09 32 000 6208	13.11
09 32 000 6208	13.13
09 32 000 6208	13.15
09 32 000 6209	06.20
09 32 000 6209	06.22
09 32 000 6209	06.44
09 32 000 6209	13.3
09 32 000 6209	13.5
09 32 000 6209	13.11
09 32 000 6209	13.13
09 32 000 6280	20.23
09 32 000 6295	20.19
09 32 010 3001	03.23
09 32 010 3101	03.23
09 32 012 3001	05.23

part numbers	page
09 32 012 3101	05.23
09 32 018 3001	03.24
09 32 018 3101	03.24
09 32 032 3001	03.25
09 32 032 3001	03.27
09 32 032 3011	03.27
09 32 032 3101	03.25
09 32 032 3101	03.27
09 32 032 3111	03.27
09 32 040 3001	03.30
09 32 040 3101	03.30
09 32 046 3001	03.26
09 32 046 3001	03.28
09 32 046 3011	03.28
09 32 046 3101	03.26
09 32 046 3101	03.28
09 32 046 3111	03.28
09 32 064 3001	03.31
09 32 064 3101	03.31
09 32 240 3001	16.18
09 32 240 3101	16.18
09 32 264 3001	16.19
09 32 264 3101	16.19
09 33 000 6102	01.11
09 33 000 6102	03.32
09 33 000 6102	04.18
09 33 000 6102	05.12
09 33 000 6102	06.18
09 33 000 6102	06.40
09 33 000 6102	06.45
09 33 000 6102	06.47
09 33 000 6102	06.30
09 33 000 6102	06.35
09 33 000 6102	06.38
09 33 000 6102	13.21
09 33 000 6102	13.29
09 33 000 6104	01.11
09 33 000 6104	03.32
09 33 000 6104	04.18
09 33 000 6104	05.12
09 33 000 6104	06.18
09 33 000 6104	06.40
09 33 000 6104	06.45
09 33 000 6104	06.47
09 33 000 6104	06.30
09 33 000 6104	06.35
09 33 000 6104	06.38
09 33 000 6104	13.21
09 33 000 6104	13.29
09 33 000 6105	01.11
09 33 000 6105	03.32
09 33 000 6105	04.18
09 33 000 6105	05.12
09 33 000 6105	06.18
09 33 000 6105	06.40
09 33 000 6105	06.45
09 33 000 6105	06.47
09 33 000 6105	06.30
09 33 000 6105	06.35

part numbers	page
09 33 000 6105	06.38
09 33 000 6105	13.21
09 33 000 6105	13.29
09 33 000 6106	01.11
09 33 000 6106	03.32
09 33 000 6106	04.18
09 33 000 6106	06.18
09 33 000 6106	06.40
09 33 000 6106	06.45
09 33 000 6106	06.47
09 33 000 6106	06.30
09 33 000 6106	06.35
09 33 000 6106	06.38
09 33 000 6107	01.11
09 33 000 6107	03.32
09 33 000 6107	04.18
09 33 000 6107	05.12
09 33 000 6107	06.18
09 33 000 6107	06.40
09 33 000 6107	06.45
09 33 000 6107	06.47
09 33 000 6107	06.30
09 33 000 6107	06.35
09 33 000 6107	06.38
09 33 000 6107	13.29
09 33 000 6109	03.33
09 33 000 6109	04.18
09 33 000 6109	05.12
09 33 000 6109	13.21
09 33 000 6109	13.29
09 33 000 6110	03.33
09 33 000 6110	04.18
09 33 000 6110	05.12
09 33 000 6110	13.21
09 33 000 6110	13.29
09 33 000 6111	03.33
09 33 000 6111	04.18
09 33 000 6111	05.12
09 33 000 6111	13.21
09 33 000 6111	13.29
09 33 000 6114	01.11
09 33 000 6114	03.32
09 33 000 6114	04.18
09 33 000 6114	05.12
09 33 000 6114	06.18
09 33 000 6114	06.40
09 33 000 6114	06.45
09 33 000 6114	06.47
09 33 000 6114	06.30
09 33 000 6114	06.35
09 33 000 6114	06.38
09 33 000 6114	13.21
09 33 000 6114	13.29
09 33 000 6115	01.11
09 33 000 6115	03.32
09 33 000 6115	05.12
09 33 000 6115	06.18
09 33 000 6115	06.40
09 33 000 6115	06.84
09 33 000 6115	06.30
09 33 000 6115	06.34
09 33 000 6115	06.38
09 33 000 6115	13.21
09 33 000 6115	13.28
09 33 000 6115	19.18
09 33 000 6116	01.11
09 33 000 6116	03.32

part numbers	page
09 33 000 6116	05.12
09 33 000 6116	06.18
09 33 000 6116	06.40
09 33 000 6116	06.84
09 33 000 6116	06.30
09 33 000 6116	06.34
09 33 000 6116	06.38
09 33 000 6116	13.21
09 33 000 6116	13.28
09 33 000 6116	19.18
09 33 000 6117	01.11
09 33 000 6117	03.32
09 33 000 6117	06.18
09 33 000 6117	06.40
09 33 000 6117	06.84
09 33 000 6117	06.30
09 33 000 6117	06.34
09 33 000 6117	06.38
09 33 000 6117	13.21
09 33 000 6117	13.28
09 33 000 6117	19.18
09 33 000 6118	01.11
09 33 000 6118	03.32
09 33 000 6118	05.12
09 33 000 6118	06.18
09 33 000 6118	06.40
09 33 000 6118	06.84
09 33 000 6118	06.30
09 33 000 6118	06.34
09 33 000 6118	06.38
09 33 000 6118	13.21
09 33 000 6118	13.28
09 33 000 6118	19.18
09 33 000 6119	01.11
09 33 000 6119	03.32
09 33 000 6119	05.12
09 33 000 6119	06.18
09 33 000 6119	06.40
09 33 000 6119	06.84
09 33 000 6119	06.30
09 33 000 6119	06.34
09 33 000 6119	06.38
09 33 000 6119	13.28
09 33 000 6119	19.18
09 33 000 6121	01.11
09 33 000 6121	03.32
09 33 000 6121	04.18
09 33 000 6121	05.12
09 33 000 6121	06.18
09 33 000 6121	06.40
09 33 000 6121	06.45
09 33 000 6121	06.47
09 33 000 6121	06.30
09 33 000 6121	06.35
09 33 000 6121	06.38
09 33 000 6121	13.21
09 33 000 6121	13.29
09 33 000 6122	01.11
09 33 000 6122	03.32
09 33 000 6122	05.12
09 33 000 6122	06.18
09 33 000 6122	06.40
09 33 000 6122	06.84
09 33 000 6122	06.30
09 33 000 6122	06.34
09 33 000 6122	06.38
09 33 000 6122	13.21

List of part numbers

part numbers	page	part numbers	page	part numbers	page	part numbers	page
09 33 000 6122	13.28	09 33 000 6205	06.35	09 33 000 6217	06.84	09 33 000 6227	01.11
09 33 000 6122	19.18	09 33 000 6205	06.38	09 33 000 6217	06.30	09 33 000 6227	03.32
09 33 000 6123	01.11	09 33 000 6205	13.21	09 33 000 6217	06.34	09 33 000 6227	06.18
09 33 000 6123	03.32	09 33 000 6205	13.29	09 33 000 6217	06.38	09 33 000 6227	06.40
09 33 000 6123	05.12	09 33 000 6206	01.11	09 33 000 6217	13.21	09 33 000 6227	06.30
09 33 000 6123	06.18	09 33 000 6206	03.32	09 33 000 6217	13.28	09 33 000 6227	06.35
09 33 000 6123	06.40	09 33 000 6206	04.18	09 33 000 6217	19.18	09 33 000 6227	06.38
09 33 000 6123	06.84	09 33 000 6206	06.18	09 33 000 6218	01.11	09 33 000 6227	13.21
09 33 000 6123	06.30	09 33 000 6206	06.40	09 33 000 6218	03.32	09 33 000 6227	13.29
09 33 000 6123	06.34	09 33 000 6206	06.45	09 33 000 6218	05.12	09 33 000 6239	06.84
09 33 000 6123	06.38	09 33 000 6206	06.47	09 33 000 6218	06.18	09 33 000 6239	19.18
09 33 000 6123	13.21	09 33 000 6206	06.30	09 33 000 6218	06.40	09 33 000 6262	41.3
09 33 000 6123	13.28	09 33 000 6206	06.35	09 33 000 6218	06.84	09 33 000 6263	41.3
09 33 000 6123	19.18	09 33 000 6206	06.38	09 33 000 6218	06.30	09 33 000 6272	41.3
09 33 000 6127	01.11	09 33 000 6207	01.11	09 33 000 6218	06.34	09 33 000 6273	41.3
09 33 000 6127	03.32	09 33 000 6207	03.32	09 33 000 6218	06.38	09 33 000 6280	20.21
09 33 000 6127	06.18	09 33 000 6207	04.18	09 33 000 6218	13.21	09 33 000 6280	20.32
09 33 000 6127	06.40	09 33 000 6207	05.12	09 33 000 6218	13.28	09 33 000 6295	20.26
09 33 000 6127	06.30	09 33 000 6207	06.18	09 33 000 6218	19.18	09 33 000 9801	11.9
09 33 000 6127	06.35	09 33 000 6207	06.40	09 33 000 6220	01.11	09 33 000 9803	11.9
09 33 000 6127	06.38	09 33 000 6207	06.45	09 33 000 6220	03.32	09 33 000 9808	11.15
09 33 000 6127	13.21	09 33 000 6207	06.47	09 33 000 6220	04.18	09 33 000 9808	80.24
09 33 000 6127	13.29	09 33 000 6207	06.30	09 33 000 6220	05.12	09 33 000 9809	11.15
09 33 000 6139	06.84	09 33 000 6207	06.35	09 33 000 6220	06.18	09 33 000 9809	80.24
09 33 000 6139	19.18	09 33 000 6207	06.38	09 33 000 6220	06.40	09 33 000 9908	80.24
09 33 000 6162	41.3	09 33 000 6207	13.29	09 33 000 6220	06.45	09 33 000 9909	80.24
09 33 000 6163	41.3	09 33 000 6214	01.11	09 33 000 6220	06.47	09 33 000 9910	80.30
09 33 000 6172	41.3	09 33 000 6214	03.32	09 33 000 6220	06.30	09 33 000 9912	80.30
09 33 000 6173	41.3	09 33 000 6214	04.18	09 33 000 6220	06.35	09 33 000 9915	02.23
09 33 000 6180	20.21	09 33 000 6214	05.12	09 33 000 6220	06.38	09 33 000 9915	02.15
09 33 000 6180	20.32	09 33 000 6214	06.18	09 33 000 6220	13.21	09 33 000 9915	16.11
09 33 000 6195	20.26	09 33 000 6214	06.40	09 33 000 6220	13.29	09 33 000 9915	80.26
09 33 000 6202	01.11	09 33 000 6214	06.45	09 33 000 6221	01.11	09 33 000 9925	80.32
09 33 000 6202	03.32	09 33 000 6214	06.47	09 33 000 6221	03.32	09 33 000 9926	80.32
09 33 000 6202	04.18	09 33 000 6214	06.30	09 33 000 6221	05.12	09 33 000 9928	08.25
09 33 000 6202	05.12	09 33 000 6214	06.35	09 33 000 6221	06.18	09 33 000 9929	08.25
09 33 000 6202	06.18	09 33 000 6214	06.38	09 33 000 6221	06.40	09 33 000 9954	03.33
09 33 000 6202	06.40	09 33 000 6214	13.21	09 33 000 6221	06.84	09 33 000 9954	13.22
09 33 000 6202	06.45	09 33 000 6214	13.29	09 33 000 6221	06.30	09 33 000 9954	13.29
09 33 000 6202	06.47	09 33 000 6215	01.11	09 33 000 6221	06.34	09 33 000 9954	16.20
09 33 000 6202	06.30	09 33 000 6215	03.32	09 33 000 6221	06.38	09 33 000 9954	80.26
09 33 000 6202	06.35	09 33 000 6215	05.12	09 33 000 6221	13.28	09 33 000 9956	11.15
09 33 000 6202	06.38	09 33 000 6215	06.18	09 33 000 6221	19.18	09 33 000 9957	11.15
09 33 000 6202	13.21	09 33 000 6215	06.40	09 33 000 6222	01.11	09 33 000 9964	08.26
09 33 000 6202	13.29	09 33 000 6215	06.84	09 33 000 6222	03.32	09 33 000 9965	08.26
09 33 000 6204	01.11	09 33 000 6215	06.30	09 33 000 6222	05.12	09 33 000 9966	08.26
09 33 000 6204	03.32	09 33 000 6215	06.34	09 33 000 6222	06.18	09 33 000 9967	08.26
09 33 000 6204	04.18	09 33 000 6215	06.38	09 33 000 6222	06.40	09 33 000 9971	08.26
09 33 000 6204	05.12	09 33 000 6215	13.21	09 33 000 6222	06.84	09 33 000 9971	80.34
09 33 000 6204	06.18	09 33 000 6215	13.28	09 33 000 6222	06.30	09 33 000 9973	08.26
09 33 000 6204	06.40	09 33 000 6215	19.18	09 33 000 6222	06.34	09 33 000 9973	80.35
09 33 000 6204	06.45	09 33 000 6216	01.11	09 33 000 6222	06.38	09 33 000 9980	11.7
09 33 000 6204	06.47	09 33 000 6216	03.32	09 33 000 6222	13.21	09 33 000 9981	11.16
09 33 000 6204	06.30	09 33 000 6216	05.12	09 33 000 6222	13.28	09 33 000 9981	80.12
09 33 000 6204	06.35	09 33 000 6216	06.18	09 33 000 6222	19.18	09 33 000 9982	11.16
09 33 000 6204	06.38	09 33 000 6216	06.40	09 33 000 6223	01.11	09 33 000 9984	11.6
09 33 000 6204	13.21	09 33 000 6216	06.84	09 33 000 6223	03.32	09 33 000 9985	11.5
09 33 000 6204	13.29	09 33 000 6216	06.30	09 33 000 6223	05.12	09 33 000 9987	11.4
09 33 000 6205	01.11	09 33 000 6216	06.34	09 33 000 6223	06.18	09 33 000 9988	11.8
09 33 000 6205	03.32	09 33 000 6216	06.38	09 33 000 6223	06.40	09 33 000 9989	11.9
09 33 000 6205	04.18	09 33 000 6216	13.21	09 33 000 6223	06.84	09 33 000 9990	11.4
09 33 000 6205	05.12	09 33 000 6216	13.28	09 33 000 6223	06.30	09 33 000 9991	11.3
09 33 000 6205	06.18	09 33 000 6216	19.18	09 33 000 6223	06.34	09 33 000 9992	80.28
09 33 000 6205	06.40	09 33 000 6217	01.11	09 33 000 6223	06.38	09 33 000 9996	20.21
09 33 000 6205	06.45	09 33 000 6217	03.32	09 33 000 6223	13.21	09 33 000 9996	20.21
09 33 000 6205	06.47	09 33 000 6217	06.18	09 33 000 6223	13.28		
09 33 000 6205	06.30	09 33 000 6217	06.40	09 33 000 6223	19.18	09 33 006 0401	11.11

List of part numbers

part numbers	page
09 33 006 2601	03.4
09 33 006 2602	03.4
09 33 006 2616	03.14
09 33 006 2672	03.14
09 33 006 2701	03.4
09 33 006 2702	03.4
09 33 006 2716	03.14
09 33 006 2772	03.14
09 33 006 4625	08.12
09 33 006 4626	08.12
09 33 006 4629	08.21
09 33 006 4635	08.13
09 33 006 4636	08.13
09 33 006 4639	08.21
09 33 006 4725	08.12
09 33 006 4726	08.12
09 33 006 4729	08.21
09 33 006 4735	08.13
09 33 006 4736	08.13
09 33 006 4739	08.21
09 33 006 5401	11.11
09 33 010 0401	11.12
09 33 010 2601	03.5
09 33 010 2602	03.5
09 33 010 2616	03.15
09 33 010 2672	03.15
09 33 010 2691	41.7
09 33 010 2701	03.5
09 33 010 2702	03.5
09 33 010 2716	03.15
09 33 010 2772	03.15
09 33 010 2791	41.7
09 33 010 4625	08.14
09 33 010 4626	08.14
09 33 010 4629	08.22
09 33 010 4635	08.15
09 33 010 4636	08.15
09 33 010 4639	08.22
09 33 010 4725	08.14
09 33 010 4726	08.14
09 33 010 4729	08.22
09 33 010 4735	08.15
09 33 010 4736	08.15
09 33 010 4739	08.22
09 33 010 5401	11.12
09 33 016 0401	11.13
09 33 016 2601	03.6
09 33 016 2601	03.9
09 33 016 2602	03.6
09 33 016 2602	03.8
09 33 016 2611	03.9
09 33 016 2612	03.8
09 33 016 2616	03.16
09 33 016 2616	03.18
09 33 016 2626	03.18
09 33 016 2672	03.16
09 33 016 2672	03.19
09 33 016 2691	41.8
09 33 016 2701	03.6
09 33 016 2701	03.9
09 33 016 2702	03.6
09 33 016 2702	03.8
09 33 016 2711	03.9
09 33 016 2712	03.8
09 33 016 2716	03.16

part numbers	page
09 33 016 2716	03.18
09 33 016 2726	03.18
09 33 016 2772	03.16
09 33 016 2772	03.19
09 33 016 2791	41.8
09 33 016 4625	08.16
09 33 016 4626	08.16
09 33 016 4629	08.23
09 33 016 4635	08.17
09 33 016 4636	08.17
09 33 016 4639	08.23
09 33 016 4725	08.16
09 33 016 4726	08.16
09 33 016 4729	08.23
09 33 016 4735	08.17
09 33 016 4736	08.17
09 33 016 4739	08.23
09 33 016 5401	11.13
09 33 024 0401	11.14
09 33 024 2601	03.7
09 33 024 2601	03.11
09 33 024 2602	03.7
09 33 024 2602	03.10
09 33 024 2611	03.11
09 33 024 2612	03.10
09 33 024 2616	03.17
09 33 024 2616	03.20
09 33 024 2626	03.20
09 33 024 2672	03.17
09 33 024 2672	03.21
09 33 024 2689	41.9
09 33 024 2691	41.9
09 33 024 2701	03.7
09 33 024 2701	03.11
09 33 024 2702	03.7
09 33 024 2702	03.10
09 33 024 2711	03.11
09 33 024 2712	03.10
09 33 024 2716	03.17
09 33 024 2716	03.20
09 33 024 2726	03.20
09 33 024 2772	03.17
09 33 024 2772	03.21
09 33 024 2789	41.9
09 33 024 2791	41.9
09 33 024 4625	08.18
09 33 024 4626	08.18
09 33 024 4629	08.24
09 33 024 4635	08.19
09 33 024 4636	08.19
09 33 024 4639	08.24
09 33 024 4725	08.18
09 33 024 4726	08.18
09 33 024 4729	08.24
09 33 024 4735	08.19
09 33 024 4736	08.19
09 33 024 4739	08.24
09 33 024 5401	11.14
09 33 200 6115	16.20
09 33 200 6115	16.31
09 33 200 6115	16.33
09 33 200 6115	16.35
09 33 200 6115	16.37
09 33 200 6116	16.20
09 33 200 6116	16.31

part numbers	page
09 33 200 6116	16.33
09 33 200 6116	16.35
09 33 200 6116	16.37
09 33 200 6117	16.20
09 33 200 6117	16.31
09 33 200 6117	16.33
09 33 200 6117	16.35
09 33 200 6117	16.37
09 33 200 6118	16.20
09 33 200 6118	16.31
09 33 200 6118	16.33
09 33 200 6118	16.35
09 33 200 6118	16.37
09 33 200 6119	16.20
09 33 200 6119	16.31
09 33 200 6119	16.33
09 33 200 6119	16.35
09 33 200 6119	16.37
09 33 200 6122	16.20
09 33 200 6122	16.31
09 33 200 6122	16.33
09 33 200 6122	16.35
09 33 200 6122	16.37
09 33 200 6123	16.20
09 33 200 6123	16.31
09 33 200 6123	16.33
09 33 200 6123	16.35
09 33 200 6123	16.37
09 33 200 6215	16.20
09 33 200 6215	16.31
09 33 200 6215	16.33
09 33 200 6215	16.35
09 33 200 6215	16.37
09 33 200 6216	16.20
09 33 200 6216	16.31
09 33 200 6216	16.33
09 33 200 6216	16.35
09 33 200 6216	16.37
09 33 200 6217	16.20
09 33 200 6217	16.31
09 33 200 6217	16.33
09 33 200 6217	16.35
09 33 200 6217	16.37
09 33 200 6218	16.20
09 33 200 6218	16.31
09 33 200 6218	16.33
09 33 200 6218	16.35
09 33 200 6218	16.37
09 33 200 6221	16.20
09 33 200 6221	16.31
09 33 200 6221	16.33
09 33 200 6221	16.35
09 33 200 6221	16.37
09 33 200 6222	16.20
09 33 200 6222	16.31
09 33 200 6222	16.33
09 33 200 6222	16.35
09 33 200 6222	16.37
09 33 200 6223	16.20
09 33 200 6223	16.31
09 33 200 6223	16.33
09 33 200 6223	16.35
09 33 200 6223	16.37
09 33 206 2602	16.13
09 33 206 2702	16.13

part numbers	page
09 33 210 2602	16.14
09 33 210 2702	16.14
09 33 216 2602	16.15
09 33 216 2702	16.15
09 33 224 2602	16.16
09 33 224 2702	16.16
09 33 800 6102	17.8
09 33 800 6104	17.8
09 33 800 6105	17.8
09 33 800 6114	17.8
09 33 800 6121	17.8
09 33 800 6202	17.8
09 33 800 6204	17.8
09 33 800 6205	17.8
09 33 800 6214	17.8
09 33 800 6220	17.8
09 33 806 2601	17.4
09 33 806 2602	17.4
09 33 806 2701	17.4
09 33 806 2702	17.4
09 33 810 2601	17.5
09 33 810 2602	17.5
09 33 810 2701	17.5
09 33 810 2702	17.5
09 33 816 2601	17.6
09 33 816 2602	17.6
09 33 816 2701	17.6
09 33 816 2702	17.6
09 33 824 2601	17.7
09 33 824 2602	17.7
09 33 824 2701	17.7
09 33 824 2702	17.7
09 34 003 0301	04.20
09 34 003 2601	04.4
09 34 003 2602	04.4
09 34 003 2616	04.13
09 34 003 2701	04.4
09 34 003 2702	04.4
09 34 003 2716	04.13
09 34 006 0301	04.21
09 34 006 2601	04.5
09 34 006 2601	04.7
09 34 006 2602	04.5
09 34 006 2602	04.7
09 34 006 2616	04.14
09 34 006 2616	04.16
09 34 006 2701	04.5
09 34 006 2701	04.7
09 34 006 2702	04.5
09 34 006 2702	04.7
09 34 006 2716	04.14
09 34 006 2716	04.16
09 34 010 0301	04.22
09 34 010 2601	04.6
09 34 010 2601	04.8
09 34 010 2602	04.6
09 34 010 2602	04.8

List of part numbers

part numbers	page
09 34 010 2616	04.15
09 34 010 2616	04.17
09 34 010 2701	04.6
09 34 010 2701	04.8
09 34 010 2702	04.6
09 34 010 2702	04.8
09 34 010 2716	04.15
09 34 010 2716	04.17
09 34 016 2601	04.10
09 34 016 2601	04.11
09 34 016 2701	04.10
09 34 016 2701	04.11
09 36 008 2632	02.5
09 36 008 2732	02.5
09 36 008 3001	02.5
09 36 008 3101	02.5
09 37 000 9912	80.8
09 37 000 9946	80.8
09 37 000 9947	80.8
09 37 000 9948	80.8
09 37 000 9949	80.8
09 37 003 0301	19.36
09 37 003 0301	31.82
09 37 003 0305	31.82
09 37 003 0801	31.82
09 37 003 5401	31.81
09 37 003 5402	31.81
09 37 003 5405	31.83
09 37 003 5406	31.83
09 37 006 0301	31.86
09 37 006 0318	31.86
09 37 006 5405	31.87
09 37 006 5405	31.87
09 37 006 5407	31.87
09 37 006 5407	31.87
09 37 010 0301	31.89
09 37 010 5403	31.88
09 37 010 5403	31.88
09 37 010 5405	31.89
09 37 010 5405	31.89
09 37 016 0301	31.91
09 37 016 5402	31.90
09 37 016 5402	31.90
09 37 016 5405	31.91
09 37 016 5405	31.91
09 37 024 0301	31.94
09 37 024 0381	31.95
09 37 024 5402	31.93
09 37 024 5402	31.93
09 37 024 5405	31.94
09 37 024 5405	31.94
09 37 048 0301	14.42
09 37 048 0301	31.96
09 38 000 9901	80.34
09 38 005 2601	14.10
09 38 005 2602	14.10
09 38 005 2621	14.8
09 38 005 2622	14.8
09 38 005 2701	14.10
09 38 005 2702	14.10
09 38 005 2721	14.8
09 38 005 2722	14.8
09 38 006 2601	05.16
09 38 006 2611	05.14
09 38 006 2701	05.16
09 38 006 2711	05.14
09 38 008 2601	05.9
09 38 008 2602	05.9
09 38 008 2611	05.9
09 38 008 2612	05.9
09 38 008 2653	05.30
09 38 008 2701	05.9
09 38 008 2702	05.9
09 38 008 2753	05.30
09 38 012 2601	05.26
09 38 012 2651	05.28
09 38 012 2701	05.26
09 38 012 2751	05.28
09 38 018 2601	05.18
09 38 018 2602	05.18
09 38 018 2701	05.18
09 38 018 2702	05.18
09 38 032 3001	05.11
09 38 032 3101	05.11
09 38 042 3001	05.20
09 38 042 3101	05.20
09 40 000 9901	14.25
09 40 000 9901	31.131
09 40 000 9902	31.135
09 40 000 9903	14.26
09 40 000 9903	31.139
09 40 000 9904	14.28
09 40 000 9904	14.31
09 40 000 9904	14.34
09 40 000 9904	14.38
09 40 000 9904	31.145
09 40 000 9910	80.9
09 40 000 9911	80.9
09 40 000 9912	80.9
09 40 000 9913	80.9
09 40 000 9914	80.9
09 40 000 9921	80.34
09 40 000 9922	80.34
09 40 000 9923	80.34
09 40 000 9924	80.34
09 40 000 9925	14.57
09 40 000 9926	14.57
09 40 000 9929	80.32
09 40 000 9931	80.31
09 40 000 9932	80.32
09 40 000 9933	80.31
09 40 000 9937	80.32
09 40 000 9955	14.18
09 40 000 9955	14.49
09 40 000 9955	14.53
09 40 000 9955	14.58
09 40 000 9956	14.20
09 40 000 9965	14.64
09 40 000 9980	80.8
09 40 003 0301	19.48
09 40 003 0301	31.123
09 40 003 0311	19.49
09 40 003 0311	31.124
09 40 003 0902	31.126
09 40 003 0950	19.49
09 40 003 0950	31.124
09 40 003 0951	19.49
09 40 003 0951	31.124
09 40 003 0953	19.49
09 40 003 0953	31.124
09 40 003 5401	19.50
09 40 003 5401	31.125
09 40 003 5402	19.50
09 40 003 5402	31.125
09 40 003 5406	19.47
09 40 003 5406	19.51
09 40 003 5406	31.121
09 40 003 5406	31.126
09 40 003 5411	19.50
09 40 003 5411	31.125
09 40 003 5412	19.50
09 40 003 5412	31.125
09 40 006 0301	31.129
09 40 006 0311	14.25
09 40 006 0311	31.129
09 40 006 0314	14.47
09 40 006 0317	31.130
09 40 006 0811	31.129
09 40 006 5401	31.130
09 40 006 5404	31.129
09 40 006 5406	31.130
09 40 006 5411	31.130
09 40 006 5414	31.129
09 40 010 0301	31.133
09 40 010 0311	31.133
09 40 010 0317	31.133
09 40 010 0811	31.133
09 40 010 5401	31.134
09 40 010 5404	31.133
09 40 010 5406	31.134
09 40 010 5411	31.134
09 40 010 5414	31.133
09 40 016 0301	31.137
09 40 016 0311	14.26
09 40 016 0311	31.138
09 40 016 0317	31.137
09 40 016 0368	14.20
09 40 016 0811	31.137
09 40 016 1201	31.138
09 40 016 5401	31.139
09 40 016 5404	31.137
09 40 016 5406	31.139
09 40 016 5411	31.139
09 40 016 5414	31.137
09 40 024 0301	31.142
09 40 024 0311	14.18
09 40 024 0311	14.49
09 40 024 0311	14.13
09 40 024 0311	14.28
09 40 024 0311	14.31
09 40 024 0311	31.142
09 40 024 0317	31.143
09 40 024 0368	14.53
09 40 024 0368	14.34
09 40 024 0368	14.38
09 40 024 0368	14.58
09 40 024 0451	14.55
09 40 024 0811	31.141
09 40 024 0951	14.55
09 40 024 5401	31.144
09 40 024 5404	31.142
09 40 024 5406	31.144
09 40 024 5411	31.144
09 40 024 5414	31.142
09 40 024 9911	14.56
09 40 024 9912	14.56
09 40 024 9913	14.56
09 40 024 9914	14.56
09 40 024 9921	14.57
09 40 024 9922	14.57
09 40 048 0311	14.62
09 40 048 0331	14.62
09 40 048 0451	14.62
09 40 048 0951	14.63
09 40 048 5401	14.63
09 40 048 9801	14.64
09 40 048 9803	14.64
09 40 048 9806	14.65
09 40 048 9809	14.65
09 40 048 9810	14.65
09 40 048 9811	14.65
09 40 048 9860	14.65
09 40 048 9906	14.65
09 40 048 9909	14.65
09 40 048 9910	14.65
09 40 048 9911	14.65
09 40 048 9912	14.65
09 40 048 9912	14.65
09 40 048 9960	14.65
09 40 703 0301	19.45
09 40 703 0301	31.119
09 40 703 0311	19.45
09 40 703 0311	31.119
09 40 703 0902	31.122
09 40 703 0950	19.46
09 40 703 0950	31.120
09 40 703 0951	19.46
09 40 703 0951	31.120
09 40 703 0953	19.46
09 40 703 0953	31.120
09 40 703 5401	19.47
09 40 703 5401	31.121
09 40 703 5402	19.47
09 40 703 5402	31.121
09 40 703 5411	19.47
09 40 703 5411	31.121
09 40 703 5412	19.47
09 40 703 5412	31.121
09 42 020 0111	08.10
09 42 020 0121	08.10
09 42 020 0131	08.10

List of part numbers

part numbers	page
09 45 400 1100	06.65
09 45 400 1109	06.65
09 45 400 1520	06.65
09 45 400 1560	06.65
09 47 474 7001	06.66
09 47 474 7002	06.66
09 47 474 7003	06.66
09 47 474 7004	06.66
09 47 474 7005	06.66
09 47 474 7006	06.66
09 47 474 7007	06.66
09 47 474 7008	06.66
09 47 474 7009	06.66
09 47 474 7010	06.66
09 47 474 7011	06.66
09 47 474 7012	06.66
09 47 474 7013	06.66
09 47 474 7014	06.66
09 47 474 7015	06.66
09 47 474 7016	06.66
09 47 474 7017	06.66
09 47 474 7018	06.66
09 47 474 7019	06.66
09 47 474 7020	06.66
09 47 474 7021	06.66
09 47 474 7022	06.66
09 47 474 7023	06.66
09 47 474 7101	06.67
09 47 474 7102	06.67
09 47 474 7103	06.67
09 47 474 7104	06.67
09 47 474 7105	06.67
09 47 474 7106	06.67
09 47 474 7107	06.67
09 47 474 7108	06.67
09 47 474 7109	06.67
09 47 474 7110	06.67
09 47 474 7111	06.67
09 47 474 7112	06.67
09 47 474 7113	06.67
09 47 474 7114	06.67
09 47 474 7115	06.67
09 47 474 7116	06.67
09 47 474 7117	06.67
09 47 474 7118	06.67
09 47 474 7119	06.67
09 47 474 7120	06.67
09 47 474 7121	06.67
09 47 474 7122	06.67
09 47 474 7123	06.67
09 62 003 0301	19.39
09 62 003 0301	31.98
09 62 003 0304	20.27
09 62 003 0801	31.99
09 62 003 0810	31.99
09 62 006 0301	31.104
09 62 010 0301	31.105
09 62 015 0301	31.102
09 62 025 0301	31.103
09 62 040 0301	31.106
09 62 064 0301	31.107
09 62 806 0301	31.110
09 62 806 0391	17.10
09 62 806 0801	31.109
09 62 810 0301	31.112
09 62 810 0305	31.113
09 62 810 0391	17.11
09 62 810 0801	31.111
09 62 810 0901	31.79
09 62 810 0974	31.79
09 62 816 0301	31.115
09 62 816 0391	17.12
09 62 816 0801	31.114
09 62 824 0301	31.116
09 62 824 0391	17.13
09 62 824 0801	31.116
09 67 000 5476	06.54
09 67 000 5476	06.69
09 67 000 5476	06.71
09 67 000 5476	06.80
09 67 000 5476	06.57
09 67 000 5476	13.36
09 67 000 5476	13.38
09 67 000 5476	19.16
09 67 000 5576	06.54
09 67 000 5576	06.69
09 67 000 5576	06.71
09 67 000 5576	06.80
09 67 000 5576	06.57
09 67 000 5576	13.36
09 67 000 5576	13.38
09 67 000 5576	19.16
09 67 000 7176	13.36
09 67 000 7276	13.36
09 67 000 7476	06.54
09 67 000 7476	06.69
09 67 000 7476	06.71
09 67 000 7476	06.80
09 67 000 7476	06.57
09 67 000 7476	13.36
09 67 000 7476	19.16
09 67 000 7576	06.54
09 67 000 7576	06.69
09 67 000 7576	06.71
09 67 000 7576	06.80
09 67 000 7576	06.57
09 67 000 7576	13.36
09 67 000 7576	19.16
09 67 000 8176	13.36
09 67 000 8276	13.36
09 67 000 8476	06.54
09 67 000 8476	06.69
09 67 000 8476	06.71
09 67 000 8476	06.80
09 67 000 8476	06.57
09 67 000 8476	13.36
09 67 000 8476	13.38
09 67 000 8476	19.16
09 67 000 8576	06.54
09 67 000 8576	06.69
09 67 000 8576	06.71
09 67 000 8576	06.80
09 67 000 8576	06.57
09 67 000 8576	13.36
09 67 000 8576	13.38
09 67 000 8576	19.16
09 69 181 5140	06.87
09 69 181 5141	06.87
09 69 181 5143	06.87
09 69 181 5230	06.87
09 69 182 5140	06.87
09 69 182 5230	06.87
09 69 281 5140	06.87
09 69 281 5141	06.87
09 69 281 5143	06.87
09 69 281 5230	06.87
09 69 282 5140	06.87
09 69 282 5230	06.87
09 70 000 9902	80.32
09 70 000 9905	80.32
09 70 000 9991	80.9
09 70 006 2615	09.3
09 70 006 2616	09.3
09 70 006 2812	09.3
09 70 006 2813	09.3
09 70 014 2613	09.4
09 70 014 2614	09.4
09 70 014 2810	09.4
09 70 014 2811	09.4
09 70 020 2621	09.5
09 70 020 2621	09.6
09 70 020 2622	09.5
09 70 020 2622	09.6
09 70 020 2816	09.5
09 70 020 2816	09.6
09 70 020 2817	09.5
09 70 020 2817	09.6
09 98 000 3008	90.27
09 98 000 3009	90.27
09 98 000 5000	90.27
09 98 000 6900	90.23
09 98 000 6901	90.23
09 98 000 6902	90.23
09 98 000 8000	90.25
09 98 000 8101	90.25
09 98 000 8102	90.25
09 98 000 8103	90.25
09 98 000 8104	90.25
09 98 000 8107	90.25
09 98 000 9001	90.21
09 98 000 9002	90.21
09 98 000 9003	90.21
09 98 300 8103	90.25
09 98 336 6851	90.21
09 99 000 0004	90.35
09 99 000 0012	90.35
09 99 000 0021	90.6
09 99 000 0022	90.6
09 99 000 0052	90.35
09 99 000 0110	90.5
09 99 000 0159	90.37
09 99 000 0169	90.11
09 99 000 0175	90.11
09 99 000 0194	90.17
09 99 000 0303	90.7
09 99 000 0304	90.7
09 99 000 0305	90.35
09 99 000 0306	90.7
09 99 000 0319	90.35
09 99 000 0323	90.36
09 99 000 0327	90.36
09 99 000 0328	90.35
09 99 000 0331	90.34
09 99 000 0332	90.36
09 99 000 0334	90.35
09 99 000 0341	90.5
09 99 000 0343	90.6
09 99 000 0344	90.9
09 99 000 0363	90.31
09 99 000 0364	90.32
09 99 000 0367	90.31
09 99 000 0368	90.35
09 99 000 0369	90.31
09 99 000 0370	90.31
09 99 000 0371	90.32
09 99 000 0372	90.32
09 99 000 0374	90.17
09 99 000 0375	90.31
09 99 000 0376	90.5
09 99 000 0377	90.8
09 99 000 0381	90.35
09 99 000 0383	90.36
09 99 000 0501	90.11
09 99 000 0503	90.17
09 99 000 0508	90.17
09 99 000 0531	90.11
09 99 000 0808	90.37
09 99 000 0810	90.9
09 99 000 0811	90.9
09 99 000 0812	90.9
09 99 000 0813	90.9
09 99 000 0814	90.10
09 99 000 0820	90.36
09 99 000 0826	14.68
09 99 000 0826	90.36
09 99 000 0827	90.34
09 99 000 0828	90.34
09 99 000 0829	80.34
09 99 000 0830	90.17
09 99 000 0831	90.17
09 99 000 0833	90.30
09 99 000 0834	90.30
09 99 000 0835	90.30
09 99 000 0836	90.32
09 99 000 0837	90.36
09 99 000 0840	90.32
09 99 000 0841	90.32
09 99 000 0842	90.35
09 99 000 0843	90.35
09 99 000 0844	90.32
09 99 000 0845	90.7
09 99 000 0847	90.31
09 99 000 0848	90.31
09 99 000 0850	90.12

part numbers	page
09 99 000 0851	90.12
09 99 000 0852	90.12
09 99 000 0853	90.12
09 99 000 0854	90.12
09 99 000 0855	90.13
09 99 000 0856	90.13
09 99 000 0857	90.13
09 99 000 0860	90.14
09 99 000 0861	90.14
09 99 000 0862	90.14
09 99 000 0863	90.14
09 99 000 0864	90.14
09 99 000 0865	90.15
09 99 000 0866	90.15
09 99 000 0867	90.15
09 99 000 0868	90.15
09 99 000 0869	90.15
09 99 000 0870	90.15
09 99 000 0871	90.15
09 99 000 0872	90.15
09 99 000 0887	90.4
09 99 000 0888	90.4
09 99 000 0889	90.4
09 99 000 0900	90.28
09 99 000 0901	90.28
09 99 000 0902	90.28
09 99 000 0903	90.29
09 99 000 0904	90.29
09 99 000 0905	90.29
09 99 000 0906	90.29
09 99 000 0907	90.29
09 99 000 0909	90.29
09 99 000 0910	90.29
09 99 000 0912	90.29
11 00 000 9501	25.45
11 00 000 9509	25.46
11 00 000 9510	25.46
11 00 000 9601	25.45
11 00 200 0101	25.20
11 00 200 0301	25.20
11 00 300 0101	25.20
11 00 300 0301	25.20
11 00 300 9501	25.44
11 00 300 9502	25.44
11 00 300 9503	25.44
11 00 300 9601	25.42
11 00 300 9603	25.42
11 00 600 0101	25.21
11 00 600 0301	25.20
11 00 600 9501	25.44
11 00 600 9502	25.44
11 00 600 9503	25.44
11 00 600 9601	25.43
11 00 600 9603	25.43
11 05 000 6101	25.14
11 05 000 6101	25.23
11 05 000 6101	25.24
11 05 000 6102	25.14
11 05 000 6102	25.23
11 05 000 6102	25.24
11 05 000 6103	25.14
11 05 000 6103	25.23

part numbers	page
11 05 000 6103	25.24
11 05 000 6104	25.14
11 05 000 6104	25.23
11 05 000 6104	25.24
11 05 000 6105	25.14
11 05 000 6105	25.23
11 05 000 6105	25.24
11 05 000 6106	25.14
11 05 000 6106	25.23
11 05 000 6106	25.24
11 05 000 6107	25.14
11 05 000 6107	25.23
11 05 000 6107	25.24
11 05 000 6108	25.14
11 05 000 6108	25.23
11 05 000 6108	25.24
11 05 000 6121	25.14
11 05 000 6121	25.23
11 05 000 6121	25.24
11 05 000 6122	25.14
11 05 000 6122	25.23
11 05 000 6122	25.24
11 05 000 6123	25.14
11 05 000 6123	25.23
11 05 000 6123	25.24
11 05 000 6124	25.14
11 05 000 6124	25.23
11 05 000 6124	25.24
11 05 000 6125	25.14
11 05 000 6125	25.23
11 05 000 6125	25.24
11 05 000 6126	25.14
11 05 000 6126	25.23
11 05 000 6126	25.24
11 05 000 6127	25.14
11 05 000 6127	25.23
11 05 000 6127	25.24
11 05 000 6128	25.14
11 05 000 6128	25.23
11 05 000 6128	25.24
11 05 000 6201	25.23
11 05 000 6201	25.24
11 05 000 6202	25.23
11 05 000 6202	25.24
11 05 000 6203	25.23
11 05 000 6203	25.24
11 05 000 6204	25.23
11 05 000 6204	25.24
11 05 000 6205	25.23
11 05 000 6205	25.24
11 05 000 6206	25.23
11 05 000 6206	25.24
11 05 000 6207	25.23
11 05 000 6207	25.24
11 05 000 6208	25.23
11 05 000 6208	25.24
11 05 000 6221	25.23
11 05 000 6221	25.24
11 05 000 6222	25.23
11 05 000 6222	25.24
11 05 000 6223	25.23
11 05 000 6223	25.24
11 05 000 6224	25.23
11 05 000 6224	25.24
11 05 000 6225	25.23
11 05 000 6225	25.24
11 05 000 6226	25.23

part numbers	page
11 05 000 6226	25.24
11 05 000 6227	25.23
11 05 000 6227	25.24
11 05 000 6228	25.23
11 05 000 6228	25.24
11 05 001 2601	25.46
11 05 001 2601	25.46
11 05 105 2633	25.12
11 05 105 2634	25.12
11 05 105 2801	25.16
11 05 105 2802	25.16
11 05 105 2803	25.17
11 05 105 2804	25.17
11 05 105 2805	25.17
11 05 105 2815	25.17
11 05 105 2823	25.18
11 05 105 3001	25.14
11 05 105 3011	25.14
11 05 105 3012	25.14
11 05 325 3001	25.23
11 05 325 3101	25.23
11 05 648 3001	25.24
11 05 648 3101	25.24
11 12 300 0100	25.31
11 12 300 0110	25.32
11 12 300 0301	25.29
11 12 300 0302	25.29
11 12 300 1200	25.29
11 12 300 1201	25.29
11 12 300 1202	25.29
11 12 300 1204	25.29
11 12 300 1205	25.29
11 12 300 1206	25.29
11 12 300 1210	25.30
11 12 300 1211	25.30
11 12 300 1212	25.30
11 12 300 1214	25.30
11 12 300 1215	25.30
11 12 300 1216	25.30
11 12 300 1400	25.31
11 12 300 1401	25.31
11 12 300 1402	25.31
11 12 300 1500	25.31
11 12 300 1501	25.31
11 12 300 1502	25.31
11 12 300 1510	25.31
11 12 300 1600	25.31
11 12 300 1601	25.31
11 12 300 1602	25.31
11 12 300 1702	25.30
11 12 300 5201	25.45
11 12 300 5202	25.45
11 12 300 5401	25.30
11 12 300 5451	25.32
11 12 600 0100	25.38
11 12 600 0110	25.39
11 12 600 0301	25.36
11 12 600 0302	25.36
11 12 600 1201	25.36
11 12 600 1202	25.36
11 12 600 1203	25.36

part numbers	page
11 12 600 1205	25.36
11 12 600 1206	25.36
11 12 600 1207	25.36
11 12 600 1211	25.37
11 12 600 1212	25.37
11 12 600 1213	25.37
11 12 600 1215	25.37
11 12 600 1216	25.37
11 12 600 1217	25.37
11 12 600 1401	25.38
11 12 600 1402	25.38
11 12 600 1403	25.38
11 12 600 1411	25.38
11 12 600 1415	25.38
11 12 600 1501	25.38
11 12 600 1502	25.38
11 12 600 1503	25.38
11 12 600 1711	25.37
11 12 600 5201	25.45
11 12 600 5401	25.36
11 12 600 5451	25.39
11 13 300 0100	25.34
11 13 300 0110	25.34
11 13 300 0301	25.33
11 13 300 0302	25.33
11 13 300 1401	25.34
11 13 300 1501	25.34
11 13 300 1601	25.34
11 13 600 0100	25.41
11 13 600 0110	25.41
11 13 600 0301	25.40
11 13 600 0302	25.40
11 13 600 1402	25.41
11 13 600 1403	25.41
11 13 600 1502	25.41
11 20 003 0300	25.27
11 20 003 0800	25.27
11 20 003 1400	25.26
11 20 003 1401	25.26
11 20 003 1600	25.26
11 20 003 1601	25.26
11 20 003 5406	25.27
11 20 003 5407	25.27
11 20 003 5456	25.26
11 20 003 9903	25.45
11 20 003 9904	25.43
11 20 003 9905	25.43
11 30 000 9955	31.76
11 30 000 9956	31.76
11 30 000 9957	31.76
11 30 000 9958	31.76
11 30 000 9959	31.76
11 30 000 9961	31.76
11 30 000 9962	31.76
11 30 016 0520	31.74
11 30 024 0520	31.75
11 99 000 0001	90.34
11 99 000 0002	90.34
11 99 300 0001	90.28

part numbers	page
11 99 600 0001	90.28
19 00 000 5013	14.60
19 00 000 5014	14.60
19 00 000 5015	14.60
19 00 000 5019	14.60
19 00 000 5022	14.60
19 00 000 5060	80.18
19 00 000 5066	80.18
19 00 000 5067	80.18
19 00 000 5068	80.18
19 00 000 5069	80.18
19 00 000 5070	80.18
19 00 000 5071	80.18
19 00 000 5072	80.18
19 00 000 5073	80.18
19 00 000 5080	80.16
19 00 000 5081	80.16
19 00 000 5082	80.16
19 00 000 5084	80.16
19 00 000 5086	80.16
19 00 000 5090	80.16
19 00 000 5091	80.16
19 00 000 5092	80.16
19 00 000 5094	80.16
19 00 000 5095	80.16
19 00 000 5096	80.16
19 00 000 5097	80.16
19 00 000 5098	80.16
19 00 000 5099	80.16
19 00 000 5172	80.18
19 00 000 5173	80.18
19 00 000 5180	80.15
19 00 000 5182	80.15
19 00 000 5184	80.15
19 00 000 5190	80.15
19 00 000 5192	80.15
19 00 000 5194	80.15
19 00 000 5196	80.15
19 00 000 5197	80.15
19 00 000 5198	80.15
19 11 001 3032	14.67
19 11 001 3132	14.67
19 12 000 5057	13.51
19 12 000 5058	13.51
19 12 000 5156	13.50
19 12 000 5157	13.50
19 12 000 5158	13.50
19 12 008 0411	13.44
19 12 008 0412	13.48
19 12 008 0425	13.40
19 12 008 0426	13.44
19 12 008 0428	13.48
19 12 008 0429	13.40
19 12 008 0501	13.45
19 12 008 0502	13.49
19 12 008 0511	13.45
19 12 008 0512	13.49
19 12 008 0526	13.45
19 12 008 0528	13.48
19 12 008 0729	13.42
19 12 708 0411	13.44
19 12 708 0501	13.45

part numbers	page
19 12 708 0511	13.46
19 14 001 0401	06.106
19 14 001 0402	06.106
19 14 001 0501	06.106
19 14 002 0400	06.110
19 14 002 0401	06.110
19 14 002 0402	06.110
19 14 002 0501	06.110
19 20 000 9962	80.19
19 20 003 0220	19.33
19 20 003 0220	31.13
19 20 003 0227	19.33
19 20 003 0227	31.13
19 20 003 0410	31.11
19 20 003 0413	19.32
19 20 003 0418	31.11
19 20 003 0420	31.11
19 20 003 0423	19.31
19 20 003 0426	19.31
19 20 003 0427	31.11
19 20 003 0620	31.11
19 20 003 0623	19.31
19 20 003 0626	19.31
19 20 003 0627	31.11
19 20 003 0720	19.33
19 20 003 0720	31.13
19 20 003 0727	19.33
19 20 003 0727	31.13
19 20 003 1120	31.9
19 20 003 1150	19.29
19 20 003 1150	31.9
19 20 003 1250	19.28
19 20 003 1250	31.7
19 20 003 1252	19.28
19 20 003 1252	31.8
19 20 003 1421	31.5
19 20 003 1422	31.5
19 20 003 1423	19.27
19 20 003 1425	19.27
19 20 003 1440	31.5
19 20 003 1443	19.27
19 20 003 1640	31.5
19 20 003 1643	19.27
19 20 003 1750	19.29
19 20 003 1750	31.8
19 20 010 0251	31.18
19 20 010 0290	31.18
19 20 010 0295	31.18
19 20 010 0446	31.17
19 20 010 0546	31.17
19 20 010 1440	31.17
19 20 010 1540	31.17
19 20 016 0251	31.21
19 20 016 0290	31.21
19 20 016 0291	31.21
19 20 016 0295	31.21
19 20 016 0446	31.20
19 20 016 0546	31.20
19 20 016 1440	31.20
19 20 016 1540	31.20

part numbers	page
19 20 032 0226	31.25
19 20 032 0231	31.24
19 20 032 0232	31.24
19 20 032 0272	31.24
19 20 032 0426	31.24
19 20 032 0427	31.24
19 20 032 0437	31.23
19 20 032 0527	31.23
19 20 032 0537	31.23
19 20 032 1521	31.23
19 20 032 1531	31.23
19 30 006 0291	31.29
19 30 006 0292	31.29
19 30 006 0296	31.29
19 30 006 0297	31.29
19 30 006 0446	31.27
19 30 006 0447	31.27
19 30 006 0546	31.27
19 30 006 0547	31.27
19 30 006 0586	31.32
19 30 006 0587	31.32
19 30 006 0716	31.31
19 30 006 0756	31.30
19 30 006 0757	31.30
19 30 006 1250	31.29
19 30 006 1255	31.29
19 30 006 1290	31.29
19 30 006 1295	31.29
19 30 006 1440	31.27
19 30 006 1540	31.27
19 30 006 1541	31.27
19 30 006 1750	31.30
19 30 006 2255	31.30
19 30 006 2295	31.30
19 30 006 7296	31.30
19 30 010 0231	31.35
19 30 010 0266	31.39
19 30 010 0271	31.35
19 30 010 0272	31.35
19 30 010 0291	31.42
19 30 010 0292	31.42
19 30 010 0296	31.42
19 30 010 0297	31.42
19 30 010 0427	31.33
19 30 010 0428	31.33
19 30 010 0436	31.37
19 30 010 0447	31.40
19 30 010 0465	31.33
19 30 010 0527	31.33
19 30 010 0537	31.37
19 30 010 0547	31.40
19 30 010 0586	31.44
19 30 010 0736	31.35
19 30 010 0737	31.35
19 30 010 0756	31.43
19 30 010 0757	31.43
19 30 010 1225	31.39
19 30 010 1230	31.35
19 30 010 1231	31.35
19 30 010 1250	31.42
19 30 010 1255	31.42
19 30 010 1265	31.39
19 30 010 1270	31.35
19 30 010 1290	31.42
19 30 010 1295	31.42

part numbers	page
19 30 010 1420	31.33
19 30 010 1421	31.33
19 30 010 1430	31.37
19 30 010 1440	31.40
19 30 010 1441	31.40
19 30 010 1520	31.33
19 30 010 1521	31.33
19 30 010 1530	31.37
19 30 010 1540	31.40
19 30 010 1541	31.40
19 30 010 1730	31.35
19 30 010 1750	31.43
19 30 010 2295	31.43
19 30 010 7296	31.43
19 30 016 0232	31.47
19 30 016 0252	31.54
19 30 016 0267	31.51
19 30 016 0271	31.47
19 30 016 0272	31.47
19 30 016 0273	31.47
19 30 016 0282	31.56
19 30 016 0291	31.54
19 30 016 0292	31.54
19 30 016 0297	31.54
19 30 016 0427	31.45
19 30 016 0428	31.45
19 30 016 0437	31.50
19 30 016 0438	31.50
19 30 016 0447	31.52
19 30 016 0448	31.52
19 30 016 0466	31.45
19 30 016 0487	31.56
19 30 016 0523	31.46
19 30 016 0527	31.45
19 30 016 0528	31.45
19 30 016 0529	31.46
19 30 016 0537	31.50
19 30 016 0538	31.50
19 30 016 0547	31.52
19 30 016 0548	31.52
19 30 016 0586	31.56
19 30 016 0587	31.56
19 30 016 0666	31.45
19 30 016 0736	31.48
19 30 016 0737	31.48
19 30 016 0757	31.55
19 30 016 1226	31.51
19 30 016 1231	31.47
19 30 016 1251	31.54
19 30 016 1256	31.54
19 30 016 1266	31.51
19 30 016 1271	31.47
19 30 016 1291	31.54
19 30 016 1296	31.54
19 30 016 1421	31.45
19 30 016 1422	31.45
19 30 016 1431	31.50
19 30 016 1432	31.50
19 30 016 1441	31.52
19 30 016 1442	31.52
19 30 016 1521	31.45
19 30 016 1522	31.45
19 30 016 1531	31.50
19 30 016 1541	31.52
19 30 016 1542	31.52
19 30 016 1731	31.48

part numbers	page
19 30 016 1732	31.48
19 30 016 1751	31.55
19 30 016 1752	31.55
19 30 016 2296	31.55
19 30 016 7297	31.55
19 30 024 0232	31.60
19 30 024 0267	31.63
19 30 024 0272	31.60
19 30 024 0273	31.60
19 30 024 0282	31.68
19 30 024 0292	31.66
19 30 024 0297	31.66
19 30 024 0427	31.57
19 30 024 0428	31.57
19 30 024 0429	31.58
19 30 024 0437	31.62
19 30 024 0438	31.62
19 30 024 0447	31.64
19 30 024 0448	31.64
19 30 024 0467	31.57
19 30 024 0468	31.57
19 30 024 0487	31.68
19 30 024 0523	31.58
19 30 024 0527	31.57
19 30 024 0528	31.57
19 30 024 0529	31.58
19 30 024 0537	31.62
19 30 024 0538	31.62
19 30 024 0547	31.64
19 30 024 0548	31.64
19 30 024 0586	31.68
19 30 024 0587	31.68
19 30 024 0588	31.68
19 30 024 0666	31.57
19 30 024 0737	31.60
19 30 024 0738	31.60
19 30 024 0757	31.67
19 30 024 1226	31.63
19 30 024 1231	31.60
19 30 024 1251	31.66
19 30 024 1256	31.66
19 30 024 1266	31.63
19 30 024 1271	31.60
19 30 024 1291	31.66
19 30 024 1296	31.66
19 30 024 1422	31.57
19 30 024 1432	31.62
19 30 024 1442	31.64
19 30 024 1521	31.57
19 30 024 1522	31.57
19 30 024 1531	31.62
19 30 024 1541	31.64
19 30 024 1542	31.64
19 30 024 1732	31.60
19 30 024 1752	31.67
19 30 024 2296	31.66
19 30 024 7297	31.66
19 30 032 0232	31.70
19 30 032 0272	31.70
19 30 032 0273	31.70
19 30 032 0427	31.69
19 30 032 0428	31.69
19 30 032 0429	31.69
19 30 032 0527	31.69
19 30 032 0528	31.69

part numbers	page
19 30 032 0529	31.69
19 30 032 0738	31.70
19 30 048 0292	31.72
19 30 048 0293	31.72
19 30 048 0298	31.72
19 30 048 0448	31.71
19 30 048 0449	31.71
19 30 048 0450	31.71
19 30 048 0548	31.71
19 30 048 0549	31.71
19 30 210 0291	16.44
19 30 210 0292	16.44
19 30 210 0447	16.43
19 30 210 0547	16.43
19 30 210 0756	16.45
19 30 210 1250	16.44
19 30 210 1290	16.44
19 30 210 1440	16.43
19 30 210 1441	16.43
19 30 210 1540	16.43
19 30 210 1541	16.43
19 30 210 1750	16.45
19 30 216 0252	16.47
19 30 216 0291	16.47
19 30 216 0292	16.47
19 30 216 0447	16.46
19 30 216 0448	16.46
19 30 216 0547	16.46
19 30 216 0548	16.46
19 30 216 0757	16.47
19 30 216 1251	16.47
19 30 216 1291	16.47
19 30 216 1441	16.46
19 30 216 1442	16.46
19 30 216 1541	16.46
19 30 216 1542	16.46
19 30 216 1751	16.47
19 30 216 1752	16.47
19 30 224 0292	16.49
19 30 224 0447	16.48
19 30 224 0448	16.48
19 30 224 0547	16.48
19 30 224 0548	16.48
19 30 224 0757	16.49
19 30 224 1251	16.49
19 30 224 1291	16.49
19 30 224 1442	16.48
19 30 224 1541	16.48
19 30 224 1542	16.48
19 30 224 1752	16.49
19 34 003 0270	04.20
19 34 003 0420	04.20
19 34 003 0421	04.20
19 34 003 0520	04.20
19 34 003 0730	04.20
19 34 003 0731	04.20
19 34 006 0271	04.21
19 34 006 0421	04.21
19 34 006 0521	04.21
19 34 006 0731	04.21
19 34 006 0732	04.21

part numbers	page
19 34 010 0271	04.22
19 34 010 0422	04.22
19 34 010 0521	04.22
19 34 010 0732	04.22
19 36 000 5134	14.25
19 36 000 5134	14.30
19 36 000 5134	14.26
19 36 000 5134	14.31
19 36 000 5134	14.36
19 36 000 5135	14.25
19 36 000 5135	14.30
19 36 000 5135	14.33
19 36 000 5135	14.50
19 36 000 5135	14.28
19 36 000 5135	14.51
19 37 003 1150	31.83
19 37 003 1250	19.37
19 37 003 1250	31.82
19 37 003 1440	31.81
19 37 003 1443	19.36
19 37 003 1640	31.81
19 37 003 1643	19.36
19 37 003 1750	19.37
19 37 003 1750	31.83
19 37 006 0296	31.86
19 37 006 0445	31.85
19 37 006 0446	31.85
19 37 006 0545	31.85
19 37 006 0546	31.85
19 37 006 1290	31.86
19 37 006 1440	31.85
19 37 006 1540	31.85
19 37 010 0272	31.89
19 37 010 0296	31.89
19 37 010 0426	31.88
19 37 010 0427	31.88
19 37 010 0465	31.88
19 37 010 0526	31.88
19 37 010 0527	31.88
19 37 010 0528	31.88
19 37 010 1270	31.89
19 37 010 1420	31.88
19 37 010 1520	31.88
19 37 016 0272	31.91
19 37 016 0273	31.91
19 37 016 0282	31.92
19 37 016 0427	31.90
19 37 016 0487	31.92
19 37 016 0527	31.90
19 37 016 0528	31.90
19 37 016 0587	31.92
19 37 016 1231	31.91
19 37 016 1421	31.90
19 37 016 1521	31.90
19 37 024 0272	31.94
19 37 024 0282	31.95
19 37 024 0427	31.93
19 37 024 0428	31.93
19 37 024 0487	31.95
19 37 024 0527	31.93
19 37 024 0528	31.93

part numbers	page
19 37 024 0587	31.95
19 37 024 0733	31.94
19 37 024 1421	31.93
19 37 024 1521	31.93
19 37 048 0401	14.41
19 37 048 0401	31.96
19 37 048 0448	31.96
19 37 048 0449	31.96
19 37 048 0548	31.96
19 40 003 0400	19.48
19 40 003 0400	31.123
19 40 003 0410	19.48
19 40 003 0410	31.123
19 40 003 0411	19.48
19 40 003 0411	31.123
19 40 003 0900	31.126
19 40 003 0950	19.50
19 40 003 0950	31.125
19 40 003 0951	19.50
19 40 003 0951	31.125
19 40 003 0953	19.50
19 40 003 0953	31.125
19 40 006 0401	31.128
19 40 006 0410	31.128
19 40 006 0411	14.25
19 40 006 0411	31.128
19 40 006 0412	14.25
19 40 006 0412	31.128
19 40 006 0413	31.128
19 40 006 0418	14.47
19 40 006 0501	31.128
19 40 006 0510	31.128
19 40 006 0511	31.128
19 40 006 0512	31.128
19 40 006 0513	31.128
19 40 006 0911	31.130
19 40 006 1113	31.131
19 40 006 1118	31.131
19 40 006 1260	31.130
19 40 006 1261	31.130
19 40 006 1262	31.130
19 40 010 0401	31.132
19 40 010 0411	31.132
19 40 010 0412	31.132
19 40 010 0413	31.132
19 40 010 0430	31.132
19 40 010 0501	31.132
19 40 010 0511	31.132
19 40 010 0512	31.132
19 40 010 0513	31.132
19 40 010 1113	31.134
19 40 010 1118	31.134
19 40 010 1260	31.134
19 40 010 1262	31.134
19 40 010 1263	31.134
19 40 010 1271	31.134
19 40 010 1272	31.134
19 40 016 0402	31.136
19 40 016 0411	31.136
19 40 016 0412	31.136
19 40 016 0413	31.136
19 40 016 0414	31.136

part numbers	page
19 40 016 0431	14.26
19 40 016 0431	31.136
19 40 016 0478	14.19
19 40 016 0502	31.136
19 40 016 0511	31.137
19 40 016 0512	31.137
19 40 016 0513	31.137
19 40 016 0514	31.137
19 40 016 0912	31.138
19 40 016 0922	31.138
19 40 016 0978	14.20
19 40 016 1114	31.139
19 40 016 1119	31.139
19 40 016 1261	31.138
19 40 016 1262	31.138
19 40 016 1263	31.138
19 40 016 1273	31.138
19 40 024 0402	31.140
19 40 024 0410	31.140
19 40 024 0412	31.141
19 40 024 0413	31.141
19 40 024 0414	31.141
19 40 024 0419	31.140
19 40 024 0420	14.12
19 40 024 0420	31.140
19 40 024 0431	31.141
19 40 024 0432	14.28
19 40 024 0432	31.141
19 40 024 0433	31.141
19 40 024 0438	14.48
19 40 024 0461	14.30
19 40 024 0461	14.12
19 40 024 0461	31.141
19 40 024 0467	14.30
19 40 024 0467	31.140
19 40 024 0468	14.33
19 40 024 0468	14.50
19 40 024 0471	14.12
19 40 024 0471	31.141
19 40 024 0473	14.17
19 40 024 0473	31.141
19 40 024 0474	14.17
19 40 024 0474	31.141
19 40 024 0477	31.140
19 40 024 0478	14.36
19 40 024 0503	31.141
19 40 024 0512	31.141
19 40 024 0513	31.141
19 40 024 0514	31.141
19 40 024 0537	31.141
19 40 024 0631	14.12
19 40 024 0914	14.13
19 40 024 0914	31.143
19 40 024 0931	14.13
19 40 024 0931	14.31
19 40 024 0931	31.143
19 40 024 0941	31.143
19 40 024 0968	14.34
19 40 024 0968	14.51
19 40 024 0971	14.13
19 40 024 0971	31.143
19 40 024 0978	14.38
19 40 024 1114	31.144
19 40 024 1119	31.145
19 40 024 1231	14.13
19 40 024 1231	14.31

part numbers	page
19 40 024 1242	14.18
19 40 024 1263	31.144
19 40 024 1271	14.13
19 40 024 1273	31.144
19 40 024 1274	31.144
19 40 024 9901	14.55
19 40 024 9902	14.55
19 40 024 9903	14.55
19 40 048 9801	14.63
19 40 048 9812	14.64
19 40 048 9820	14.64
19 40 048 9822	14.64
19 40 048 9860	14.64
19 40 048 9901	14.63
19 40 703 0400	19.45
19 40 703 0400	31.119
19 40 703 0410	19.45
19 40 703 0410	31.119
19 40 703 0411	19.45
19 40 703 0411	31.119
19 40 703 0900	31.122
19 40 703 0950	19.46
19 40 703 0950	31.120
19 40 703 0951	19.47
19 40 703 0951	31.121
19 40 703 0953	19.47
19 40 703 0953	31.121
19 41 000 5131	29.38
19 41 000 5132	29.38
19 41 000 5132	80.19
19 41 000 5141	29.38
19 41 000 5142	29.38
19 41 000 5201	29.38
19 41 000 9801	29.39
19 41 000 9802	29.39
19 41 000 9803	29.39
19 41 000 9804	29.39
19 41 000 9901	29.39
19 41 000 9902	29.39
19 41 000 9903	29.39
19 41 000 9904	29.39
19 41 001 2600	29.37
19 41 001 2700	29.37
19 41 006 0232	29.13
19 41 006 0272	29.13
19 41 006 0301	29.13
19 41 006 0422	29.12
19 41 006 0422	29.25
19 41 006 0522	29.12
19 41 006 0522	29.25
19 41 006 0722	29.13
19 41 006 5404	29.14
19 41 006 5404	29.27
19 41 006 5405	29.14
19 41 006 5405	29.27
19 41 006 5406	29.12
19 41 006 5407	29.12
19 41 010 0232	29.16
19 41 010 0272	29.16
19 41 010 0301	29.16
19 41 010 0422	29.15

part numbers	page
19 41 010 0422	29.28
19 41 010 0522	29.15
19 41 010 0522	29.28
19 41 010 0722	29.16
19 41 010 2601	29.7
19 41 010 2701	29.7
19 41 010 5404	29.17
19 41 010 5404	29.30
19 41 010 5405	29.17
19 41 010 5405	29.30
19 41 010 5406	29.15
19 41 010 5407	29.15
19 41 014 2601	29.8
19 41 014 2701	29.8
19 41 016 0233	29.19
19 41 016 0273	29.19
19 41 016 0301	29.19
19 41 016 0423	29.18
19 41 016 0423	29.31
19 41 016 0523	29.18
19 41 016 0523	29.31
19 41 016 0723	29.19
19 41 016 5404	29.19
19 41 016 5404	29.32
19 41 016 5405	29.20
19 41 016 5405	29.33
19 41 016 5406	29.18
19 41 016 5407	29.18
19 41 020 2601	29.9
19 41 020 2701	29.9
19 41 024 0233	29.22
19 41 024 0273	29.22
19 41 024 0301	29.22
19 41 024 0423	29.21
19 41 024 0423	29.34
19 41 024 0523	29.21
19 41 024 0523	29.34
19 41 024 0723	29.22
19 41 024 5404	29.22
19 41 024 5404	29.35
19 41 024 5405	29.23
19 41 024 5405	29.36
19 41 024 5406	29.21
19 41 024 5407	29.21
19 41 028 2601	29.10
19 41 028 2701	29.10
19 41 106 0232	29.13
19 41 106 0272	29.13
19 41 106 0422	29.12
19 41 106 0422	29.25
19 41 106 0522	29.12
19 41 106 0522	29.25
19 41 106 0722	29.13
19 41 110 0232	29.16
19 41 110 0272	29.16
19 41 110 0422	29.15
19 41 110 0422	29.28
19 41 110 0522	29.15
19 41 110 0522	29.28
19 41 110 0722	29.16

part numbers	page
19 41 116 0233	29.19
19 41 116 0273	29.19
19 41 116 0423	29.18
19 41 116 0423	29.31
19 41 116 0523	29.18
19 41 116 0523	29.31
19 41 116 0723	29.19
19 41 124 0233	29.22
19 41 124 0273	29.22
19 41 124 0423	29.21
19 41 124 0423	29.34
19 41 124 0523	29.21
19 41 124 0523	29.34
19 41 124 0723	29.22
19 41 206 0232	29.26
19 41 206 0272	29.26
19 41 206 0301	29.26
19 41 206 0722	29.26
19 41 206 5406	29.25
19 41 206 5407	29.25
19 41 210 0232	29.29
19 41 210 0272	29.29
19 41 210 0301	29.29
19 41 210 0722	29.29
19 41 210 5406	29.28
19 41 210 5407	29.28
19 41 216 0233	29.32
19 41 216 0273	29.32
19 41 216 0301	29.32
19 41 216 0723	29.32
19 41 216 5406	29.31
19 41 216 5407	29.31
19 41 224 0233	29.35
19 41 224 0273	29.35
19 41 224 0301	29.35
19 41 224 0723	29.35
19 41 224 5406	29.34
19 41 224 5407	29.34
19 41 306 0232	29.26
19 41 306 0272	29.26
19 41 306 0722	29.26
19 41 310 0232	29.29
19 41 310 0272	29.29
19 41 310 0722	29.29
19 41 316 0233	29.32
19 41 316 0273	29.32
19 41 316 0723	29.32
19 41 324 0233	29.35
19 41 324 0273	29.35
19 41 324 0723	29.35
19 44 000 9902	31.151
19 44 003 0301	19.42
19 44 003 0301	31.148
19 44 003 0801	19.43
19 44 003 0801	31.148
19 44 003 1150	19.43

part numbers	page
19 44 003 1150	31.149
19 44 003 1250	19.43
19 44 003 1250	31.148
19 44 003 1440	31.147
19 44 003 1443	19.42
19 44 003 1640	31.147
19 44 003 1643	19.42
19 44 003 5421	31.147
19 44 003 5422	19.42
19 44 003 5422	31.147
19 44 003 5425	19.43
19 44 003 5425	31.148
19 44 003 5426	31.149
19 44 310 0303	31.151
19 44 310 0305	31.150
19 44 310 0447	31.150
19 44 310 0547	31.150
19 44 310 0757	31.151
19 44 310 5421	31.151
19 44 310 5422	31.150
19 62 000 5056	13.51
19 62 000 5057	13.51
19 62 000 5058	13.51
19 62 000 5080	80.17
19 62 000 5081	80.17
19 62 000 5082	80.17
19 62 000 5084	80.17
19 62 000 5090	80.17
19 62 000 5092	80.17
19 62 000 5094	80.17
19 62 000 5096	80.17
19 62 000 5097	80.17
19 62 000 5098	80.17
19 62 003 1120	31.100
19 62 003 1150	31.100
19 62 003 1250	19.40
19 62 003 1250	31.99
19 62 003 1440	31.98
19 62 003 1443	19.39
19 62 003 1640	31.98
19 62 003 1643	19.39
19 62 003 1750	19.40
19 62 003 1750	31.100
19 62 006 0441	31.104
19 62 006 0442	31.104
19 62 006 0541	31.104
19 62 010 0442	31.105
19 62 010 0542	31.105
19 62 010 0543	31.105
19 62 015 0446	31.102
19 62 015 0546	31.102
19 62 025 0446	31.103
19 62 025 0546	31.103
19 62 040 0442	31.106
19 62 040 0542	31.106
19 62 064 0443	31.107
19 62 064 0543	31.107

part numbers	page
19 62 806 0446	17.10
19 62 806 0446	31.109
19 62 806 0447	17.10
19 62 806 0447	31.109
19 62 806 0546	17.10
19 62 806 0546	31.109
19 62 806 0547	17.10
19 62 806 0547	31.109
19 62 806 1290	31.110
19 62 806 1440	17.10
19 62 806 1440	31.109
19 62 806 1540	17.10
19 62 806 1540	31.109
19 62 810 0272	31.112
19 62 810 0426	17.11
19 62 810 0426	31.111
19 62 810 0427	17.11
19 62 810 0427	31.111
19 62 810 0446	31.113
19 62 810 0447	31.113
19 62 810 0526	17.11
19 62 810 0526	31.111
19 62 810 0527	17.11
19 62 810 0527	31.111
19 62 810 0547	31.113
19 62 810 0757	31.112
19 62 810 1271	31.112
19 62 810 1420	17.11
19 62 810 1420	31.111
19 62 810 1421	17.11
19 62 810 1421	31.111
19 62 810 1520	17.11
19 62 810 1520	31.111
19 62 816 0273	31.115
19 62 816 0427	17.12
19 62 816 0427	31.114
19 62 816 0527	17.12
19 62 816 0527	31.114
19 62 816 1271	31.115
19 62 816 1421	17.12
19 62 816 1421	31.114
19 62 816 1521	17.12
19 62 816 1521	31.114
19 62 824 0273	31.117
19 62 824 0427	17.13
19 62 824 0427	31.116
19 62 824 0527	17.13
19 62 824 0527	31.116
19 62 824 0528	17.13
19 62 824 0528	31.116
19 62 824 1271	31.117
19 62 824 1422	17.13
19 62 824 1422	31.116
19 62 824 1521	17.13
19 62 824 1521	31.116
20 10 001 3211	02.23
20 10 001 3211	05.12
20 10 001 3211	05.21
20 10 001 3211	05.24
20 10 001 3211	06.52
20 10 001 3211	06.50
20 10 001 3211	13.24
20 10 001 3211	13.34

part numbers	page
20 10 001 3211	13.32
20 10 001 3212	02.14
20 10 001 3213	02.14
20 10 001 3221	02.23
20 10 001 3221	05.12
20 10 001 3221	05.21
20 10 001 3221	05.24
20 10 001 3221	06.52
20 10 001 3221	06.50
20 10 001 3221	13.24
20 10 001 3221	13.34
20 10 001 3221	13.32
20 10 001 3222	02.14
20 10 001 3311	03.33
20 10 001 3311	13.21
20 10 001 3311	13.29
20 10 001 3321	03.33
20 10 001 3321	13.21
20 10 001 3321	13.29
20 10 001 4211	06.86
20 10 001 4211	06.88
20 10 001 4221	06.86
20 10 001 4221	06.88
20 10 001 5211	06.93
20 10 001 5211	06.93
20 10 001 5211	19.25
20 10 001 5211	19.25
20 10 001 5217	06.93
20 10 001 5217	06.93
20 10 001 5217	19.25
20 10 001 5217	19.25
20 10 125 4212	06.86
20 10 125 4212	06.88
20 10 125 4222	06.86
20 10 125 4222	06.88
20 10 125 5211	06.93
20 10 125 5211	06.93
20 10 125 5211	19.25
20 10 125 5211	19.25
20 10 125 5220	19.25
20 10 125 5220	19.25
20 10 125 8211	06.95
20 10 125 8211	06.95
20 10 125 8212	06.95
20 10 125 8212	06.95
20 10 125 8220	06.95
20 10 125 8220	06.95
20 10 125 8221	06.95
20 10 125 8221	06.95
20 10 230 4211	06.86
20 10 230 4211	06.88
20 10 230 4221	06.86
20 10 230 4221	06.88
20 10 230 5211	06.93
20 10 230 5211	06.93
20 10 230 5211	19.25
20 10 230 5211	19.25
20 80 001 9911	90.32
20 80 001 9912	90.33
20 80 001 9913	90.33
20 88 641 1015	15.3
20 88 641 1015	15.5
20 88 641 1030	15.3

part numbers	page
20 88 641 1030	15.5
20 88 641 1050	15.3
20 88 641 1050	15.5
20 88 641 1100	15.3
20 88 641 1100	15.5
20 88 641 1150	15.3
20 88 641 1150	15.5
20 88 641 1300	15.3
20 88 641 1300	15.5
20 88 821 0015	15.15
20 88 821 0030	15.15
20 88 821 0050	15.15
20 88 821 0100	15.15
20 88 821 0150	15.15
20 88 821 0300	15.15
20 88 841 0015	15.13
20 88 841 0030	15.13
20 88 841 0050	15.13
20 88 841 0100	15.13
20 88 841 0150	15.13
20 88 841 0300	15.13
20 99 000 1031	90.16
20 99 000 1033	90.16
20 99 000 1035	90.16
20 99 000 1041	90.37
20 99 000 1045	90.37
20 99 000 1046	90.37
20 99 000 1092	90.33
20 99 000 1093	90.33
20 99 000 1097	90.33
39 50 000 0100	12.6
39 50 000 0110	12.7
39 50 000 0120	12.7
39 50 000 0200	12.6
39 50 000 0210	12.7
39 50 000 0300	12.5
39 50 000 0320	12.5
39 50 000 0400	12.5
39 50 000 0420	12.5
39 50 000 0851	12.15
39 50 000 0890	12.15
39 50 000 0900	12.15
39 50 001 0001	12.3
39 50 001 0002	12.4
39 50 001 0004	12.3
39 50 001 0005	12.3
39 50 001 0006	12.3
39 50 001 0007	12.4
39 50 001 0009	12.4
39 50 001 0010	12.4
39 50 001 0012	12.4
39 50 001 0017	12.4
39 50 001 0321	12.4
39 50 001 0331	12.4
39 50 002 0093	12.11
39 50 002 0117	12.11
39 50 002 0120	12.11
39 50 002 0122	12.11
39 50 002 0133	12.11
39 50 002 0143	12.11
39 50 002 0145	12.12

List of part numbers

part numbers	page
39 50 002 0163	12.12
39 50 003 0020	12.9
39 50 003 0024	12.9
39 50 003 0040	12.9
39 50 003 0074	12.9
39 50 003 0111	12.9
39 50 003 0129	12.9
39 50 003 0170	12.10
39 50 903 0010	12.13
39 50 903 0011	12.13
39 50 903 0020	12.13
39 50 903 0021	12.13
39 50 903 004	12.13
39 50 903 0040	12.13
39 50 903 0050	12.13
39 50 903 0051	12.13
39 50 903 0060	12.13
39 50 903 0061	12.13

part numbers	page
39 50 904 0010	12.14
39 50 904 0020	12.14
39 50 904 0030	12.14
39 50 904 0031	12.14
39 50 904 0032	12.14
39 50 904 0050	12.14
61 03 000 0044	06.76
61 03 000 0045	06.76
61 03 000 0046	06.76
61 03 000 0047	06.76
61 03 000 0048	06.76
61 03 000 0049	06.76
61 03 000 0050	06.76
61 03 000 0051	06.76
61 03 000 0052	06.76
61 03 000 0053	06.76
61 03 000 0054	06.76
61 03 000 0055	06.76
61 03 000 0056	06.76
61 03 000 0057	06.76

part numbers	page
61 03 000 0058	06.76
61 03 000 0059	06.76
61 03 000 0062	06.75
61 03 000 0063	06.75
61 03 000 0064	06.75
61 03 000 0065	06.75
61 03 000 0066	06.75
61 03 000 0067	06.75
61 03 000 0068	06.75
61 03 000 0069	06.75
61 03 000 0070	06.75
61 03 000 0071	06.75
61 03 000 0072	06.75
61 03 000 0098	90.18
61 03 000 0099	90.18
61 03 000 0100	90.18
61 03 000 0101	90.18
61 03 000 0102	90.18
61 03 000 0103	90.18
61 03 000 0104	90.18
61 03 000 0105	90.18

part numbers	page
61 03 000 0127	06.76
61 03 000 0141	06.76
61 03 000 0142	06.76
61 03 000 0143	06.76
61 03 000 0165	06.75
61 03 000 0166	06.75
61 03 000 0168	90.18
61 03 000 0169	90.18
61 03 000 0172	90.18
61 03 000 0173	90.18
61 03 000 0174	90.18
61 03 000 0175	90.18
61 03 000 0176	90.18
61 03 000 0177	90.18
61 03 000 0178	90.18
61 03 000 0179	90.18
61 03 000 0180	90.18
61 03 600 0020	90.19

Catalogue order information

Please send me further information:

☐ 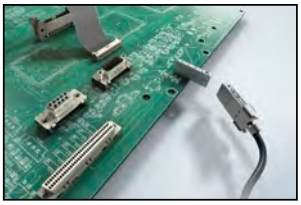

Interface Connectors

☐ 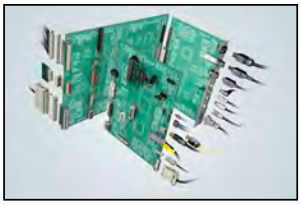

Device Connectivity

☐

Industrial Connectors Han®

☐ 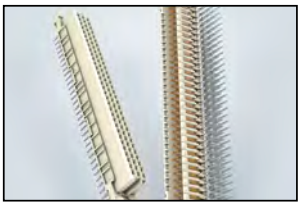

Connectors DIN 41612

☐

Intelligent Network Solutions

☐ 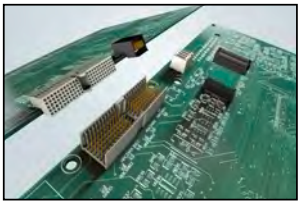

Coaxial and Metric Connectors

☐

Application brochure

☐

TCA Connectors

☐ 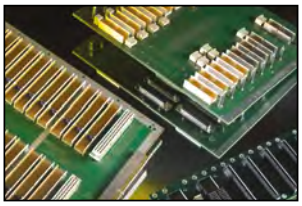

High Speed Backplanes

Sender:

Company: _____

Department: _____

Name: _____

Prename: _____

Function: _____

Street: _____

Postcode/Town: _____

Country: _____

Phone: _____

Fax: _____

E-Mail: _____

Please send it by post or fax to your local HARTING representatives (see page addresses) or visit us under www.HARTING.com.

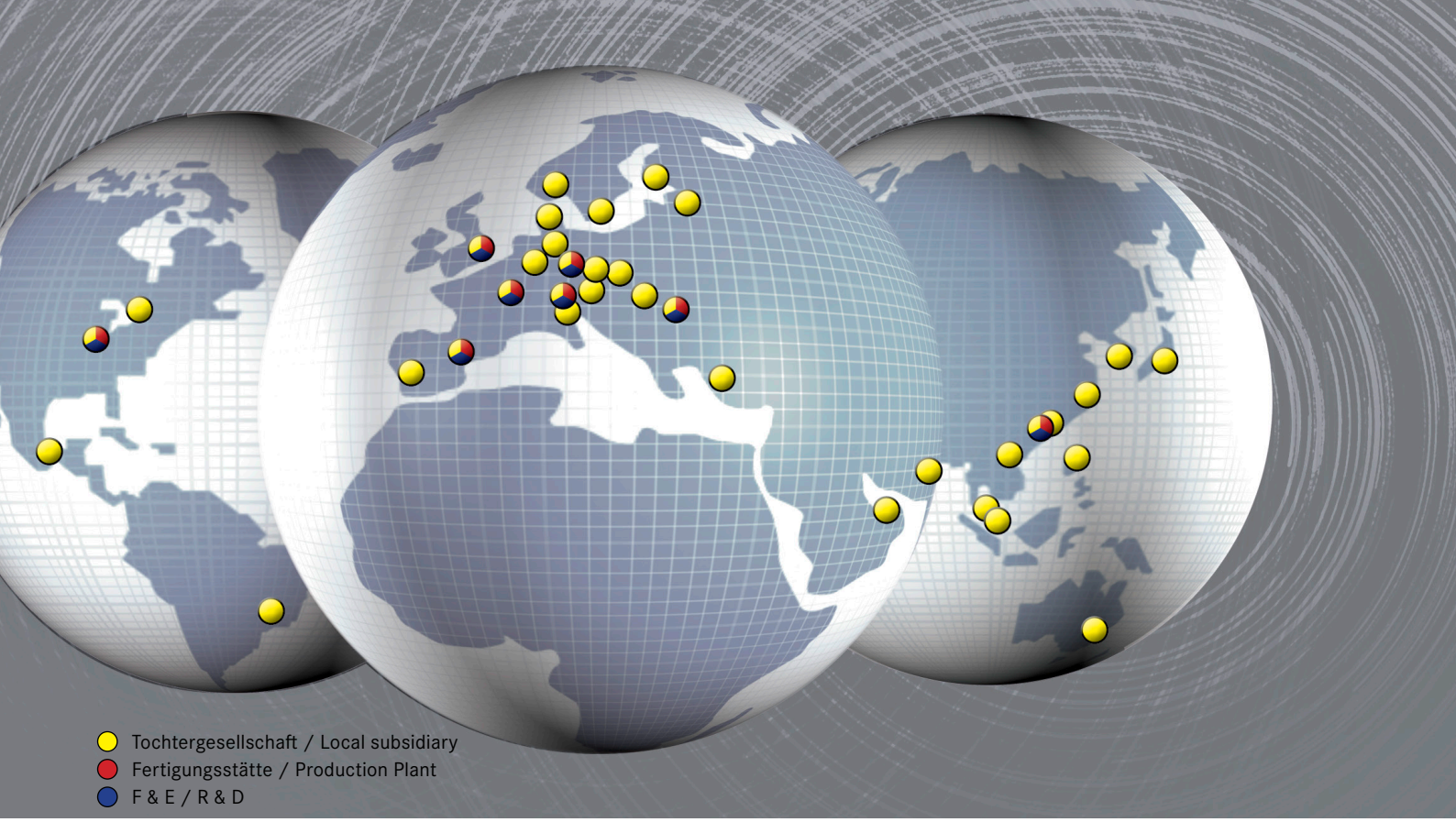

Sales Network – worldwide

Afghanistan
see United Arab Emirates

Albania
see Austria

Argentina
Condelectric S.A.
Hipólito Yrigoyen 2591
1640 – Martínez
Buenos Aires – Argentina
Phone +54 11 4836 1053
Fax +54 11 4836 1053
comercial@condelectric.com.ar

Armenia
see Russia

Australia
HARTING Pty Ltd
Suite 11 / 2 Enterprise Drive
Bundoora 3083, AUS-Victoria
Phone +61 3 9466 7088
Fax +61 3 9466 7099
au@HARTING.com
www.HARTING.com.au

Austria
HARTING Ges.m.b.H.
Deutschstraße 19, A-1230 Wien
Phone +431 6162121
Fax +431 6162121-21
at@HARTING.com
www.HARTING.at

Azerbaijan
see Turkey

Bahrain
see United Arab Emirates

Belarus
see Russia

Belgium
HARTING N.V./S.A.
Z.3 Doornveld 23, B-1731 Zellik
Phone +32 2 466 0190
Fax +32 2 466 7855
be@HARTING.com
www.HARTING.be

Bosnia and Herzegovina
see Austria

Brazil
HARTING Ltda.
Rua Major Paladino 128 –
Prédio 11
CEP 05307-000 – São Paulo –
SP – Brasil
Phone +55 11 5035 0073
Fax +55 11 5034 4743
br@HARTING.com
www.HARTING.com.br

Brunei
see Singapore

Bulgaria
see Austria

Canada
HARTING Canada Inc.
8455 Trans-Canada Hwy., Suite 202
St. Laurent, QC, H4S1Z1, Canada
Phone 855-659-6653
Fax 855-659-6654
info.ca@HARTING.com
www.HARTING.ca

China
HARTING (Zhuhai) Sales Ltd.
Shanghai Branch, Room 3501,
Grand Gateway I, No. 1 Hong Qiao Road
Xu Hui District, Shanghai 200030, China
Phone +86 21 6386 2200
Fax +86 21 6386 8636
cn@HARTING.com
www.HARTING.com.cn

Croatia
see Austria

Czech Republic
HARTING s.r.o.
Mlýnská 2, CZ-160 00 Praha 6
Phone +420 220 380 460
Fax +420 220 380 461
cz@HARTING.com
www.HARTING.cz

Denmark
HARTING ApS
Hjulmagervej 4a
DK – 7100 Vejle
Phone +45 70 25 00 32
Fax +45 75 80 64 99
dk@HARTING.com
www.HARTING.dk

Egypt
see United Arab Emirates

Estonia
see Finland

Sales Network – worldwide

Finland
HARTING Oy
Teknobulevardi 3-5
FI-01530 Vantaa
Phone +358 207 291 510
Fax +358 207 291 511
fi@HARTING.com
www.HARTING.fi

France
HARTING France
181 avenue des Nations, Paris Nord 2
BP 66058 Tremblay en France
F-95972 Roissy Charles de Gaulle Cédex
Phone +33 1 4938 3400
Fax +33 1 4863 2306
fr@HARTING.com
www.HARTING.fr

Germany
HARTING Deutschland GmbH & Co. KG
P.O. Box 2451, D-32381 Minden
Simeonscarré 1, D-32427 Minden
Phone +49 571 8896 0
Fax +49 571 8896 282
de@HARTING.com
www.HARTING.de

Georgia
see Russia

Great Britain
HARTING Ltd., Caswell Road
Brackmills Industrial Estate
GB-Northampton, NN4 7PW
Phone +44 1604 827 500
Fax +44 1604 706 777
gb@HARTING.com
www.HARTING.co.uk

Hong Kong
HARTING (HK) Limited
Regional Office Asia Pacific
3512 Metroplaza Tower 1
223 Hing Fong Road
Kwai Fong, N. T., Hong Kong
Phone +852 2423 7338
Fax +852 2480 4378
ap@HARTING.com
www.HARTING.com.hk

Hungary
HARTING Magyarország Kft.
Fehérvári út 89-95, H-1119 Budapest
Phone +36 1 205 34 64
Fax +36 1 205 34 65
hu@HARTING.com
www.HARTING.hu

Iceland
see Great Britain

India
HARTING India Pvt Ltd
7th Floor (West Wing), Central Square II
Unit No.B-19 Part, B 20&21
TVK Industrial Estate
Guindy, Chennai – 600032
Phone +91-44-43560415
+91-44-43456262
Fax +91-44-43560417
in@HARTING.com
www.HARTING.in

Indonesia
see Malaysia

Iran
see United Arab Emirates

Iraq
see United Arab Emirates

Israel
COMTEL
Israel Electronic Solutions Ltd.
Bet Hapamon, 20 Hataas st.
P.O.Box 66
Kefar-Saba 44425
Phone +972-9-7677240
Fax +972-9-7677243
sales@comtel.co.il
www.comtel.co.il

Italy
HARTING SpA
Via Dell' Industria 7
I-20090 Vimodrone (Milano)
Phone +39 02 250801
Fax +39 02 2650 597
it@HARTING.com
www.HARTING.it

Japan
HARTING K. K.
Yusen Shin-Yokohama 1 Chome Bldg., 2F
1-7-9, Shin-Yokohama, Kohoku
Yokohama 222-0033 Japan
Phone +81 45 476 3456
Fax +81 45 476 3466
jp@HARTING.com
www.HARTING.co.jp

Jemen
see United Arab Emirates

Jordan
see United Arab Emirates

Kazakhstan
see Russia

Kirghizia
see Russia

Korea (South)
HARTING Korea Limited
B-B108, Woolim Lions Valley 5th
302, Galmachi-ro, Jungwon-gu
Seongnam-si, Gyeonggi-do
462-739, Korea
Phone +82 31 750 0380
Fax +82 31 781 4616
kr@HARTING.com
www.HARTING.co.kr

Kosovo
see Austria

Kuwait
see United Arab Emirates

Latvia
see Finland

Lebanon
see United Arab Emirates

Lithuania
see Finland

Macedonia
see Austria

Malaysia (Office)
HARTING Singapore Pte Ltd
Malaysia Branch
11-02 Menara Amcorp
Jln. Persiaran Barat
46200 PJ, Sel. D. E., Malaysia
Phone +60 3 / 7955 6173
Fax +60 3 / 7955 5126
sg@HARTING.com

Montenegro
see Austria

Netherlands
HARTING B.V.
Larenweg 44
NL-5234 KA ,s-Hertogenbosch
Postbus 3526
NL-5203 DM ,s-Hertogenbosch
Phone +31 736 410 404
Fax +31 736 440 699
nl@HARTING.com
www.HARTINGbv.nl

New Zealand
see Australia

Norway
HARTING A/S
Østensjøveien 36, N-0667 Oslo
Phone +47 22 700 555
Fax +47 22 700 570
no@HARTING.com
www.HARTING.no

Oman
see United Arab Emirates

Pakistan
see United Arab Emirates

Philippines
see Malaysia

Sales Network – worldwide

Poland
HARTING Polska Sp. z o.o.
ul. Duńska 9
PL- 54-427 Wrocław
Phone +48 71 352 81 71
Fax +48 71 350 42 13
pl@HARTING.com
www.HARTING.pl

Portugal
HARTING Iberia, S. A.
C\Viriato, 47 8º, Edificio Numancia 1
E-08014 Barcelona
Phone +351 219 673 177
Fax +351 219 678 457
es@HARTING.com
www.HARTING.es/pt

Qatar
see United Arab Emirates

Republic of Moldova
see Romania

Romania
HARTING Romania SCS
Europa Unita str. 21
550018-Sibiu, Romania
Phone +40 369-102 671
Fax +40 369-102 622
ro@HARTING.com
www.HARTING.com

Russia
HARTING ZAO
Maliy Sampsoniyevsky prospect 2A
194044 Saint Petersburg, Russia
Phone +7 812 327 6477
Fax +7 812 327 6478
ru@HARTING.com
www.HARTING.ru

Saudi Arabia
see United Arab Emirates

Serbia
see Austria

Singapore
HARTING Singapore Pte Ltd.
25 International Business Park
#04-108 German Centre
Singapore 609916
Phone +65 6225 5285
Fax +65 6225 9947
sg@HARTING.com
www.HARTING.sg

Slovakia
HARTING s.r.o.
Sales office Slovakia
J. Simora 5, SK – 940 52 Nové Zámky
Phone +421 356-493 993
Fax +421 356-402 114
sk@HARTING.com
www.HARTING.sk

Slovenia
see Austria

South Africa
HARTING South Africa (Pty) Ltd
Ground Floor, Twickenham Building
PO Box 67302
Johannesburg (Bryanston)
2021, South Africa
Phone +27 (0) 11 575 0017
Fax +27 (0) 11 576 6000
za@HARTING.com
www.HARTING.co.za

Spain
HARTING Iberia S.A.
C\Viriato, 47 8º, Edificio Numancia 1
E-08014 Barcelona
Phone +34 93 363 84 75
Fax +34 93 419 95 85
es@HARTING.com
www.HARTING.es

Sweden
HARTING AB
Gustavslundsvägen 141 B 4tr
S-167 51 Bromma
Phone +46 8 445 7171
Fax +46 8 445 7170
se@HARTING.com
www.HARTING.se

Switzerland
HARTING AG
Industriestrasse 26
CH-8604 Volketswil
Phone +41 44 908 20 60
Fax +41 44 908 20 69
ch@HARTING.com
www.HARTING.ch

Syria
see United Arab Emirates

Taiwan
HARTING Taiwan Ltd.
Room 1, 5/F
495 GuangFu South Road
RC-110 Taipei, Taiwan
Phone +886 2 2758 6177
Fax +886 2 2758 7177
tw@HARTING.com
www.HARTING.com.tw

Tajikistan
see Russia

Thailand
see Malaysia

Turkey
HARTING TURKEI Elektronik Ltd. Şti.
Barbaros Mah. Dereboyu Cad. Fes-
leğen Sok.
Uphill Towers, A-1b Kat:8 D:45
34746 Ataşehir, İstanbul
Phone +90 216 688 81 00
Fax +90 216 688 81 01
tr@HARTING.com
www.HARTING.com.tr

Turkmenistan
see Russia

Ukraine
see Poland

United Arab Emirates
HARTING Middle East FZ-LLC
Knowledge Village, Block 2A, Office F72
P.O. Box 454372, Dubai
United Arab Emirates
Phone +971 4 453 9737
Fax +971 4 439 0339
uae@HARTING.com
www.HARTING.ae

USA
HARTING Inc. of North America
1370 Bowes Road
USA-Elgin, Illinois 60123
Phone +1 (877) 741-1500 (toll free)
Fax +1 (866) 278-0307 (Inside Sales)
us@HARTING.com
www.HARTING-USA.com

Uzbekistan
see Russia

Vietnam
see Singapore

Distributors – worldwide

Digi-Key Corporation:
www.digikey.com

Farnell:
www.farnell.com

FUTURE Electronics:
www.futureelectronics.com

Mouser Electronics:
www.mouser.com

RS Components:
www.rs-components.com

Other countries and general contact

HARTING Electric GmbH & Co. KG
P.O. Box 1473, D-32328 Espelkamp
Phone +49 5772 47-97100
Fax +49 5772 47-495
electric@HARTING.com
www.HARTING.com

Pushing Performance

www.HARTING.ae
www.HARTING.at
www.HARTING.com.au
www.HARTING.be
www.HARTING.com.br
www.HARTING.ca
www.HARTING.ch
www.HARTING.com.cn
www.HARTING.cz
www.HARTING.de
www.HARTING.dk
www.HARTING.es
www.HARTING.fi
www.HARTING.fr
www.HARTING.co.uk
www.HARTING.com.hk
www.HARTING.hu
www.HARTING.co.in
www.HARTING.it
www.HARTING.co.jp
www.HARTING.co.kr
www.HARTINGbv.nl
www.HARTING.no
www.HARTING.pl
www.HARTING.pt
www.HARTING.ro
www.HARTING.ru
www.HARTING.se
www.HARTING.sg
www.HARTING.sk
www.HARTING.com.tr
www.HARTING.com.tw
www.HARTING-USA.com
www.HARTING.co.za

HARTING.com –
the gateway to your country website.

HARTING Technology Group
info@HARTING.com
www.HARTING.com

BD/2015-07-16/6.0 98 41 002 0201 Version 02 9

ООО «ЛайфЭлектроникс» “LifeElectronics” LLC

ИНН 7805602321 КПП 780501001 Р/С 40702810122510004610 ФАКБ "АБСОЛЮТ БАНК" (ЗАО) в г.Санкт-Петербурге К/С 30101810900000000703 БИК 044030703

Компания «Life Electronics» занимается поставками электронных компонентов импортного и отечественного производства от производителей и со складов крупных дистрибьюторов Европы, Америки и Азии.

С конца 2013 года компания активно расширяет линейку поставок компонентов по направлению коаксиальный кабель, кварцевые генераторы и конденсаторы (керамические, пленочные, электролитические), за счёт заключения дистрибьюторских договоров

Мы предлагаем:

- *Конкурентоспособные цены и скидки постоянным клиентам.*
- *Специальные условия для постоянных клиентов.*
- *Подбор аналогов.*
- *Поставку компонентов в любых объемах, удовлетворяющих вашим потребностям.*

- *Приемлемые сроки поставки, возможна ускоренная поставка.*
- *Доставку товара в любую точку России и стран СНГ.*
- *Комплексную поставку.*
- *Работу по проектам и поставку образцов.*
- *Формирование склада под заказчика.*

- *Сертификаты соответствия на поставляемую продукцию (по желанию клиента).*
- *Тестирование поставляемой продукции.*
- *Поставку компонентов, требующих военную и космическую приемку.*
- *Входной контроль качества.*
- *Наличие сертификата ISO.*

В составе нашей компании организован Конструкторский отдел, призванный помогать разработчикам, и инженерам.

Конструкторский отдел помогает осуществить:

- *Регистрацию проекта у производителя компонентов.*
- *Техническую поддержку проекта.*
- *Защиту от снятия компонента с производства.*
- *Оценку стоимости проекта по компонентам.*
- *Изготовление тестовой платы монтаж и пусконаладочные работы.*

Тел: +7 (812) 336 43 04 (многоканальный)
Email: org@lifeelectronics.ru

www.lifeelectronics.ru