ADC08200 8-Bit, 20 Msps to 200 Msps, Low Power A/D Converter with Internal Sample-and-Hold

Check for Samples: ADC08200

FEATURES

- **Single-Ended Input**
- **Internal Sample-and-Hold Function**
- **Low Voltage (Single +3V) Operation**
- **Small Package**
- **Power-Down Feature**

KEY SPECIFICATIONS

- **Resolution 8 Bits**
- **Maximum sampling frequency 200 Msps (min)**
- **DNL ±0.4 LSB (typ)**
- **ENOB (f_{IN} = 50 MHz) 7.3 bits (typ)**
- **THD (f_{IN} = 50 MHz) 61 dB (typ)**
- **Power Consumption**
  - **Operating 1.05 mW/Msps (typ)**
  - **Power Down 1 mW (typ)**

APPLICATIONS

- **Flat Panel Displays**
- **Projection Systems**
- **Set-Top Boxes**
- **Battery-Powered Instruments**
- **Communications**
- **Medical Imaging**
- **Astronomy**

DESCRIPTION

The ADC08200 is a low-power, 8-bit, monolithic analog-to-digital converter with an on-chip track-and-hold circuit. Optimized for low cost, low power, small size and ease of use, this product operates at conversion rates up to 230 Msps while consuming just 1.05 mW per MHz of clock frequency, or 210 mW at 200 Msps. Raising the PD pin puts the ADC08200 into a Power Down mode where it consumes about 1 mW.

The unique architecture achieves 7.3 Effective Bits with 50 MHz input frequency. The ADC08200 is resistant to latch-up and the outputs are short-circuit proof. The top and bottom of the ADC08200's reference ladder are available for connections, enabling a wide range of input possibilities. The digital outputs are TTL/CMOS compatible with a separate output power supply pin to support interfacing with 3V or 2.5V logic. The digital inputs (CLK and PD) are TTL/CMOS compatible. The output data format is straight binary.

The ADC08200 is offered in a 24-lead TSSOP package and, while specified over the industrial temperature range of −40°C to +85°C, it will function over the to −40°C to +105°C temperature range.

Please be aware that an important notice concerning availability, standard warranty, and use in critical applications of Texas Instruments semiconductor products and disclaimers thereto appears at the end of this data sheet.

All trademarks are the property of their respective owners.

PRODUCTION DATA information is current as of publication date. Products conform to specifications per the terms of the Texas Instruments standard warranty. Production processing does not necessarily include testing of all parameters.

Copyright © 2001–2013, Texas Instruments Incorporated

Block Diagram

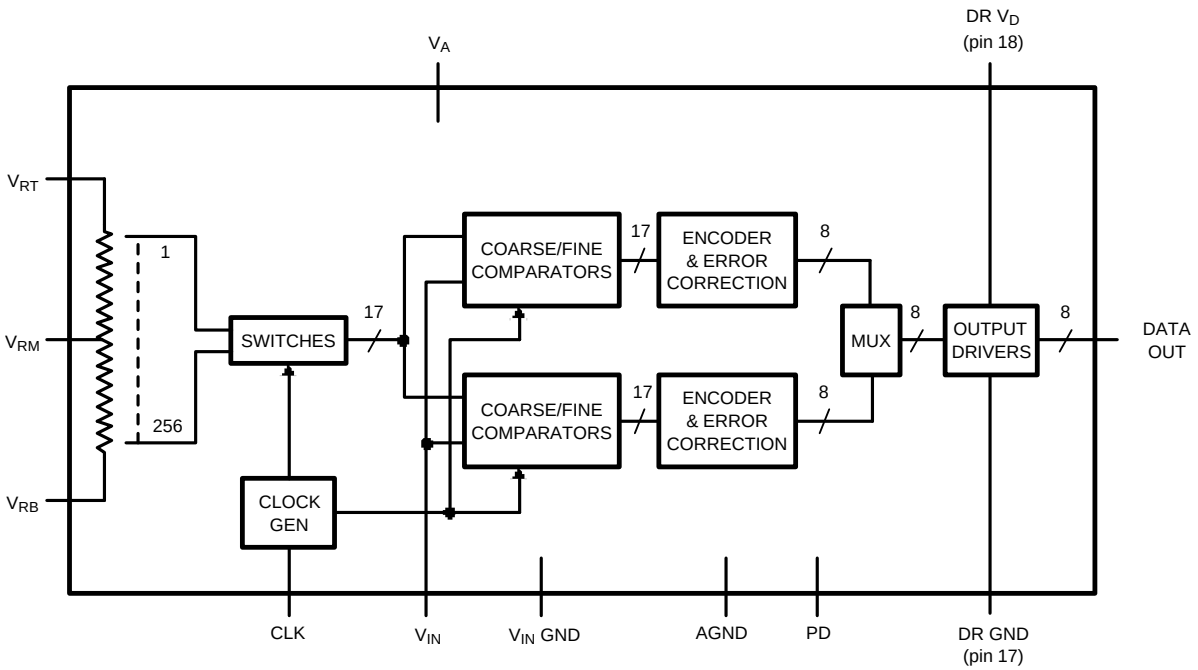

Pin Configuration

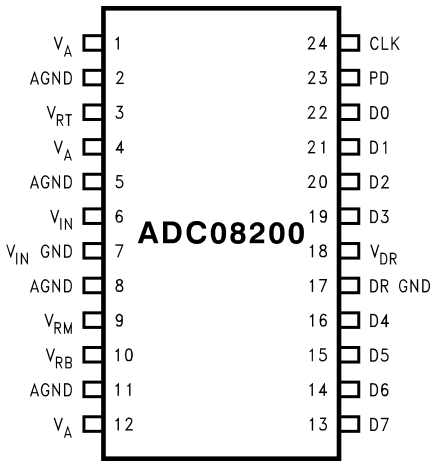

Figure 1. 24-Lead TSSOP
See PW Package

Copyright © 2001–2013, Texas Instruments Incorporated

PIN DESCRIPTIONS AND EQUIVALENT CIRCUITS

Pin No.	Symbol	Equivalent Circuit	Description
6	V_{IN}	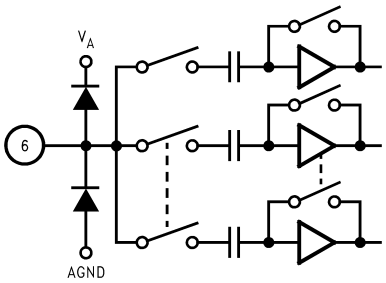	Analog signal input. Conversion range is V_{RB} to V_{RT}.
3	V_{RT}	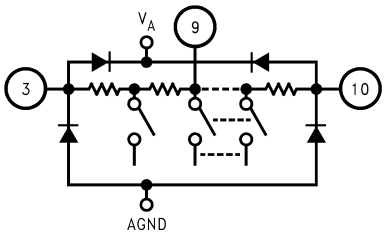	Analog Input that is the high (top) side of the reference ladder of the ADC. Nominal range is 0.5V to V_A. Voltage on V_{RT} and V_{RB} inputs define the V_{IN} conversion range. Bypass well. See THE ANALOG INPUT for more information.
9	V_{RM}		Mid-point of the reference ladder. This pin should be bypassed to a quiet point in the ground plane with a 0.1 µF capacitor.
10	V_{RB}		Analog Input that is the low side (bottom) of the reference ladder of the ADC. Nominal range is 0.0V to (V_{RT} – 0.5V). Voltage on V_{RT} and V_{RB} inputs define the V_{IN} conversion range. Bypass well. See THE ANALOG INPUT for more information.
23	PD	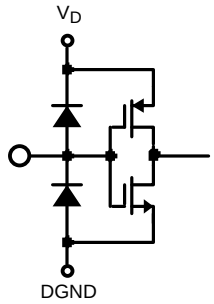	Power Down input. When this pin is high, the converter is in the Power Down mode and the data output pins hold the last conversion result.
24	CLK		CMOS/TTL compatible digital clock Input. V_{IN} is sampled on the rising edge of CLK input.
13 thru 16 and 19 thru 22	D0–D7	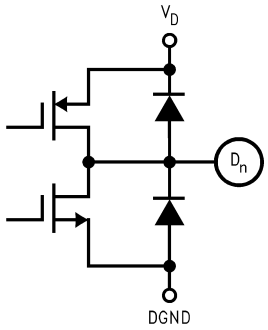	Conversion data digital Output pins. D0 is the LSB, D7 is the MSB. Valid data is output just after the rising edge of the CLK input.
7	V_{IN} GND		Reference ground for the single-ended analog input, V_{IN}.
1, 4, 12	V_A		Positive analog supply pin. Connect to a quiet voltage source of +3V. V_A should be bypassed with a 0.1 µF ceramic chip capacitor for each pin, plus one 10 µF capacitor. See POWER SUPPLY CONSIDERATIONS for more information.
18	V_{DR}		Power supply for the output drivers. If connected to V_A, decouple well from V_A.
17	DR GND		The ground return for the output driver supply.
2, 5, 8, 11	AGND		The ground return for the analog supply.

Copyright © 2001–2013, Texas Instruments Incorporated

These devices have limited built-in ESD protection. The leads should be shorted together or the device placed in conductive foam during storage or handling to prevent electrostatic damage to the MOS gates.

Absolute Maximum Ratings (1)(2)(3)

Supply Voltage (V_A)		3.8V
Driver Supply Voltage (V_{DR})		V_A +0.3V
Voltage on Any Input or Output Pin		−0.3V to V_A
Reference Voltage (V_{RT}, V_{RB})		V_A to AGND
CLK, PD Voltage Range		−0.05V to (V_A + 0.05V)
Input Current at Any Pin (4)		±25 mA
Package Input Current (4)		±50 mA
Power Dissipation at T_A = 25°C		See (5)
ESD Susceptibility (6)	Human Body Model	2500V
	Machine Model	200V
Soldering Temperature, Infrared, 10 seconds (7)		235°C
Storage Temperature		−65°C to +150°C

(1) All voltages are measured with respect to GND = AGND = DR GND = 0V, unless otherwise specified.
(2) Absolute Maximum Ratings indicate limits beyond which damage to the device may occur. Operating Ratings indicate conditions for which the device is functional, but do not ensure specific performance limits. For ensured specifications and test conditions, see the Electrical Characteristics. The ensured specifications apply only for the test conditions listed. Some performance characteristics may degrade when the device is not operated under the listed test conditions.
(3) If Military/Aerospace specified devices are required, please contact the Texas Instruments Sales Office/ Distributors for availability and specifications.
(4) When the input voltage at any pin exceeds the power supplies (that is, less than AGND or DR GND, or greater than V_A or V_{DR}), the current at that pin should be limited to 25 mA. The 50 mA maximum package input current rating limits the number of pins that can safely exceed the power supplies with an input current of 25 mA to two.
(5) The absolute maximum junction temperature ($T_J$max) for this device is 150°C. The maximum allowable power dissipation is dictated by $T_J$max, the junction-to-ambient thermal resistance (θ_{JA}), and the ambient temperature (T_A), and can be calculated using the formula P_DMAX = ($T_J$max − T_A) / θ_{JA}. The values for maximum power dissipation listed above will be reached only when this device is operated in a severe fault condition (e.g., when input or output pins are driven beyond the power supply voltages, or the power supply polarity is reversed). Obviously, such conditions should always be avoided.
(6) Human body model is 100 pF capacitor discharged through a 1.5 kΩ resistor. Machine model is 220 pF discharged through ZERO Ohms.
(7) See AN-450, “Surface Mounting Methods and Their Effect on Product Reliability” (SNOA742).

Operating Ratings (1)(2)

Operating Temperature Range	−40°C ≤ T_A ≤ +105°C
Supply Voltage (V_A)	+2.7V to +3.6V
Driver Supply Voltage (V_{DR})	+2.4V to V_A
Ground Difference |GND - DR GND|	0V to 300 mV
Upper Reference Voltage (V_{RT})	0.5V to (V_A −0.3V)
Lower Reference Voltage (V_{RB})	0V to (V_{RT} −0.5V)
V_{IN} Voltage Range	V_{RB} to V_{RT}

(1) Absolute Maximum Ratings indicate limits beyond which damage to the device may occur. Operating Ratings indicate conditions for which the device is functional, but do not ensure specific performance limits. For ensured specifications and test conditions, see the Electrical Characteristics. The ensured specifications apply only for the test conditions listed. Some performance characteristics may degrade when the device is not operated under the listed test conditions.
(2) All voltages are measured with respect to GND = AGND = DR GND = 0V, unless otherwise specified.

Package Thermal Resistance

Package	θ_{JA}
24-Lead TSSOP	92°C/W

Copyright © 2001–2013, Texas Instruments Incorporated

Converter Electrical Characteristics

The following specifications apply for $V_A = V_{DR} = +3.0V_{DC}$, $V_{RT} = +1.9V$, $V_{RB} = 0.3V$, $C_L = 5$ pF, $f_{CLK} = 200$ MHz at 50% duty cycle. **Boldface limits apply for $T_J = T_{MIN}$ to T_{MAX}**: all other limits $T_J = 25°C$ (1)(2)(3)

Symbol	Parameter	Conditions		Typical (4)	Limits (4)	Units (Limits)
DC ACCURACY						
INL	Integral Non-Linearity			+1.0 −0.3	**+1.9** **−1.2**	LSB (max) LSB (min)
DNL	Differential Non-Linearity			±0.4	**±0.95**	LSB (max)
	Missing Codes				**0**	(max)
FSE	Full Scale Error			36	**50**	mV (max)
V_{OFF}	Zero Scale Offset Error			46	**60**	mV (max)
ANALOG INPUT AND REFERENCE CHARACTERISTICS						
V_{IN}	Input Voltage			1.6	**V_{RB}** **V_{RT}**	V (min) V (max)
C_{IN}	V_{IN} Input Capacitance	V_{IN} = 0.75V +0.5 Vrms	(CLK LOW)	3		pF
			(CLK HIGH)	4		pF
R_{IN}	R_{IN} Input Resistance			>1		MΩ
BW	Full Power Bandwidth			500		MHz
V_{RT}	Top Reference Voltage			1.9	**V_A**	V (max)
					0.5	V (min)
V_{RB}	Bottom Reference Voltage			0.3	**V_{RT} − 0.5**	V (max)
					0	V (min)
V_{RT} - V_{RB}	Reference Voltage Delta			1.6	1.0	V (min)
					2.3	V (max)
R_{REF}	Reference Ladder Resistance	V_{RT} to V_{RB}		160	**120**	Ω (min)
					200	Ω (max)
CLK, PD DIGITAL INPUT CHARACTERISTICS						
V_{IH}	Logical High Input Voltage	$V_{DR} = V_A = 3.6V$			**2.0**	V (min)
V_{IL}	Logical Low Input Voltage	$V_{DR} = V_A = 2.7V$			**0.8**	V (max)
I_{IH}	Logical High Input Current	$V_{IH} = V_{DR} = V_A = 3.6V$		10		nA
I_{IL}	Logical Low Input Current	$V_{IL} = 0V$, $V_{DR} = V_A = 2.7V$		−50		nA
C_{IN}	Logic Input Capacitance			3		pF

(1) The Electrical characteristics tables list ensured specifications under the listed Recommended Conditions except as otherwise modified or specified by the Electrical Characteristics Conditions and/or Notes. Typical specifications are estimations for room temperature only and are not ensured.

(2) The analog inputs are protected as shown below. Input voltage magnitudes up to V_A + 300 mV or to 300 mV below GND will not damage this device. However, errors in the A/D conversion can occur if the input goes above V_{DR} or below GND by more than 100 mV. For example, if V_A is $2.7V_{DC}$ the full-scale input voltage must be $\leq 2.8V_{DC}$ to ensure accurate conversions.

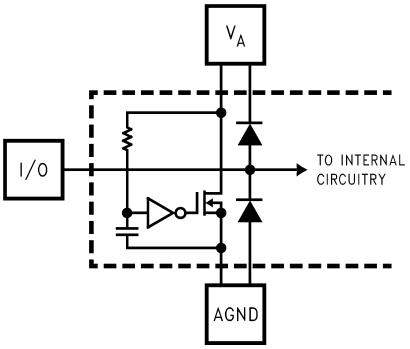

(3) To ensure accuracy, it is required that V_A and V_{DR} be well bypassed. Each supply pin must be decoupled with separate bypass capacitors.

(4) Typical figures are at $T_J = 25°C$, and represent most likely parametric norms. Test limits are specifid to TI's AOQL (Average Outgoing Quality Level).

Converter Electrical Characteristics (continued)

The following specifications apply for $V_A = V_{DR} = +3.0V_{DC}$, $V_{RT} = +1.9V$, $V_{RB} = 0.3V$, $C_L = 5$ pF, $f_{CLK} = 200$ MHz at 50% duty cycle. **Boldface limits apply for $T_J = T_{MIN}$ to T_{MAX}**: all other limits $T_J = 25°C$ (1)(2)(3)

Symbol	Parameter	Conditions	Typical (4)	Limits (4)	Units (Limits)
DIGITAL OUTPUT CHARACTERISTICS					
V_{OH}	High Level Output Voltage	$V_A = V_{DR} = 2.7V$, $I_{OH} = -400$ µA	2.6	**2.4**	V (min)
V_{OL}	Low Level Output Voltage	$V_A = V_{DR} = 2.7V$, $I_{OL} = 1.0$ mA	0.4	**0.5**	V (max)
DYNAMIC PERFORMANCE					
ENOB	Effective Number of Bits	$f_{IN} = 4$ MHz, $V_{IN} = FS - 0.25$ dB	7.5		Bits
		$f_{IN} = 20$ MHz, $V_{IN} = FS - 0.25$ dB	7.4		Bits
		$f_{IN} = 50$ MHz, $V_{IN} = FS - 0.25$ dB	7.3	**6.9**	Bits (min)
		$f_{IN} = 70$ MHz, $V_{IN} = FS - 0.25$ dB	7.2		Bits
		$f_{IN} = 100$ MHz, $V_{IN} = FS - 0.25$ dB	7.0		Bits
SINAD	Signal-to-Noise & Distortion	$f_{IN} = 4$ MHz, $V_{IN} = FS - 0.25$ dB	47		dB
		$f_{IN} = 20$ MHz, $V_{IN} = FS - 0.25$ dB	46		dB
		$f_{IN} = 50$ MHz, $V_{IN} = FS - 0.25$ dB	46	**43.3**	dB (min)
		$f_{IN} = 70$ MHz, $V_{IN} = FS - 0.25$ dB	45		dB
		$f_{IN} = 100$ MHz, $V_{IN} = FS - 0.25$ dB	44		dB
SNR	Signal-to-Noise Ratio	$f_{IN} = 4$ MHz, $V_{IN} = FS - 0.25$ dB	47		dB
		$f_{IN} = 20$ MHz, $V_{IN} = FS - 0.25$ dB	46		dB
		$f_{IN} = 50$ MHz, $V_{IN} = FS - 0.25$ dB	46	**43.4**	dB (min)
		$f_{IN} = 70$ MHz, $V_{IN} = FS - 0.25$ dB	45		dB
		$f_{IN} = 100$ MHz, $V_{IN} = FS - 0.25$ dB	44		dB
SFDR	Spurious Free Dynamic Range	$f_{IN} = 4$ MHz, $V_{IN} = FS - 0.25$ dB	60		dBc
		$f_{IN} = 20$ MHz, $V_{IN} = FS - 0.25$ dB	58		dBc
		$f_{IN} = 50$ MHz, $V_{IN} = FS - 0.25$ dB	60		dBc
		$f_{IN} = 70$ MHz, $V_{IN} = FS - 0.25$ dB	57		dBc
		$f_{IN} = 100$ MHz, $V_{IN} = FS - 0.25$ dB	54		dBc
THD	Total Harmonic Distortion	$f_{IN} = 4$ MHz, $V_{IN} = FS - 0.25$ dB	−60		dBc
		$f_{IN} = 20$ MHz, $V_{IN} = FS - 0.25$ dB	−58		dBc
		$f_{IN} = 50$ MHz, $V_{IN} = FS - 0.25$ dB	−60		dBc
		$f_{IN} = 70$ MHz, $V_{IN} = FS - 0.25$ dB	-56		dBc
		$f_{IN} = 100$ MHz, $V_{IN} = FS - 0.25$ dB	−53		dBc
HD2	2nd Harmonic Distortion	$f_{IN} = 4$ MHz, $V_{IN} = FS - 0.25$ dB	−66		dBc
		$f_{IN} = 20$ MHz, $V_{IN} = FS - 0.25$ dB	-68		dBc
		$f_{IN} = 50$ MHz, $V_{IN} = FS - 0.25$ dB	−66		dBc
		$f_{IN} = 70$ MHz, $V_{IN} = FS - 0.25$ dB	-60		dBc
		$f_{IN} = 100$ MHz, $V_{IN} = FS - 0.25$ dB	−55		dBc
HD3	3rd Harmonic Distortion	$f_{IN} = 4$ MHz, $V_{IN} = FS - 0.25$ dB	−72		dBc
		$f_{IN} = 20$ MHz, $V_{IN} = FS - 0.25$ dB	−58		dBc
		$f_{IN} = 50$ MHz, $V_{IN} = FS - 0.25$ dB	−72		dBc
		$f_{IN} = 70$ MHz, $V_{IN} = FS - 0.25$ dB	-58		dBc
		$f_{IN} = 100$ MHz, $V_{IN} = FS - 0.25$ dB	−60		dBc
IMD	Intermodulation Distortion	$f_1 = 11$ MHz, $V_{IN} = FS - 6.25$ dB $f_2 = 12$ MHz, $V_{IN} = FS - 6.25$ dB	-55		dBc

Copyright © 2001–2013, Texas Instruments Incorporated

Converter Electrical Characteristics (continued)

The following specifications apply for $V_A = V_{DR} = +3.0V_{DC}$, $V_{RT} = +1.9V$, $V_{RB} = 0.3V$, $C_L = 5$ pF, $f_{CLK} = 200$ MHz at 50% duty cycle. **Boldface limits apply for $T_J = T_{MIN}$ to T_{MAX}**: all other limits $T_J = 25°C$ (1)(2)(3)

Symbol	Parameter	Conditions	Typical (4)	Limits (4)	Units (Limits)
POWER SUPPLY CHARACTERISTICS					
I_A	Analog Supply Current	DC Input	69.75	**86**	mA (max)
		f_{IN} = 10 MHz, V_{IN} = FS − 3 dB	69.75		mA
I_{DR}	Output Driver Supply Current	DC Input, PD = Low	0.25	**0.6**	mA (max)
$I_A + I_{DR}$	Total Operating Current	DC Input, PD = Low	70	**86.6**	mA (max)
		CLK Low, PD = Hi	0.3		mA
PC	Power Consumption	DC Input, Excluding Reference	210	**260**	mW (max)
		CLK Low, PD = Hi	1		mW
$PSRR_1$	Power Supply Rejection Ratio	FSE change with 2.7V to 3.3V change in V_A	54		dB
$PSRR_2$	Power Supply Rejection Ratio	SNR reduction with 200 mV at 1MHz on supply	45		dB
AC ELECTRICAL CHARACTERISTICS					
f_{C1}	Maximum Conversion Rate		230	**200**	MHz (min)
f_{C2}	Minimum Conversion Rate		10		MHz
t_{CL}	Minimum Clock Low Time		0.87	**1.0**	ns (min)
t_{CH}	Minimum Clock High Time		0.65	**0.75**	ns (min)
t_{OH}	Output Hold Time, Output Falling (5)	CLK to Data Invalid, V_A = 3.3V to 3.6V, t_A = −40°C to +105°C, C_L = 8 pF	2.4	**3.3**	ns (max)
	Output Hold Time, Output Rising (5)	CLK to Data Invalid, V_A = 3.3V to 3.6V, t_A = −40°C to +105°C, C_L = 8 pF	1.9	**2.5**	ns (max)
t_{OD}	Output Delay, Output Falling (5)	CLK to Data Transition, V_A = 3.3V to 3.6V, V_A = −40°C to +105°C, C_L = 8 pF	3.9	**2.4**	ns (min)
				5.1	ns (max)
	Output Delay, Output Rising (5)	CLK to Data Transition, V_A = 3.3V to 3.6V, t_A = −40°C to +105°C, C_L = 8 pF	3.3	**2.4**	ns (min)
				4.0	ns (max)
t_{SLEW}	Output Slew Rate (6)	Output Falling, V_A = 3.3V, C_L = 8 pF, t_A = −40°C to +105°C	0.73		V/ns
		Output Rising, V_A = 3.3V, C_L = 8 pF, t_A = −40°C to +105°C	0.88		V/ns
	Pipeline Delay (Latency)		6		Clock Cycles
t_{AD}	Sampling (Aperture) Delay	CLK Rise to Acquisition of Data	2.6		ns
t_{AJ}	Aperture Jitter		2		ps rms

(5) These specifications are ensured by design and not tested.
(6) Typical output slew rate is based upon the maximum t_{OD} and t_{OH} figures.

Copyright © 2001–2013, Texas Instruments Incorporated

Specification Definitions

APERTURE (SAMPLING) DELAY is that time required after the rise of the clock input for the sampling switch to open. The Sample/Hold circuit effectively stops capturing the input signal and goes into the "hold" mode t_{AD} after the clock goes high.

APERTURE JITTER is the variation in aperture delay from sample to sample. Aperture jitter shows up as input noise.

CLOCK DUTY CYCLE is the ratio of the time that the clock wave form is at a logic high to the total time of one clock period.

DIFFERENTIAL NON-LINEARITY (DNL) is the measure of the maximum deviation from the ideal step size of 1 LSB. Measured at 200 Msps with a ramp input.

EFFECTIVE NUMBER OF BITS (ENOB, or EFFECTIVE BITS) is another method of specifying Signal-to-Noise and Distortion Ratio, or SINAD. ENOB is defined as (SINAD – 1.76) / 6.02 and says that the converter is equivalent to a perfect ADC of this (ENOB) number of bits.

FULL POWER BANDWIDTH is a measure of the frequency at which the reconstructed output fundamental drops 3 dB below its low frequency value for a full scale input.

FULL-SCALE ERROR is a measure of how far the last code transition is from the ideal 1½ LSB below V_{RT} and is defined as:

V_{max} + 1.5 LSB – V_{RT}

where

- V_{max} is the voltage at which the transition to the maximum (full scale) code occurs (1)

INTEGRAL NON-LINEARITY (INL) is a measure of the deviation of each individual code from a line drawn from zero scale (½ LSB below the first code transition) through positive full scale (½ LSB above the last code transition). The deviation of any given code from this straight line is measured from the center of that code value. The end point test method is used. Measured at 200 Msps with a ramp input.

INTERMODULATION DISTORTION (IMD) is the creation of additional spectral components as a result of two sinusoidal frequencies being applied to the ADC input at the same time. it is defined as the ratio of the power in the second and third order intermodulation products to the power in one of the original frequencies. IMD is usually expressed in dBFS.

MISSING CODES are those output codes that are skipped and will never appear at the ADC outputs. These codes cannot be reached with any input value.

OUTPUT DELAY is the time delay after the rising edge of the input clock before the data update is present at the output pins.

OUTPUT HOLD TIME is the length of time that the output data is valid after the rise of the input clock.

PIPELINE DELAY (LATENCY) is the number of clock cycles between initiation of conversion and when that data is presented to the output driver stage. New data is available at every clock cycle, but the data lags the conversion by the Pipeline Delay plus the Output Delay.

POWER SUPPLY REJECTION RATIO (PSRR) is a measure of how well the ADC rejects a change in the power supply voltage. For the ADC08200, PSRR1 is the ratio of the change in Full-Scale Error that results from a change in the DC power supply voltage, expressed in dB. PSRR2 is a measure of how well an AC signal riding upon the power supply is rejected from the output and is here defined as

$$PSRR2 = 20Log\left(4\sqrt{10^{\frac{-SNR1}{10}} - 10^{\frac{-SNR0}{10}}}\right)$$

where

- SNR0 is the SNR measured with no noise or signal on the supply line
- SNR1 is the SNR measured with a 1 MHz, 200 mV_{P-P} signal riding upon the supply lines (2)

SIGNAL TO NOISE RATIO (SNR) is the ratio, expressed in dB, of the rms value of the input signal at the output to the rms value of the sum of all other spectral components below one-half the sampling frequency, not including harmonics or d.c.

Copyright © 2001–2013, Texas Instruments Incorporated

SIGNAL TO NOISE PLUS DISTORTION (S/(N+D) or SINAD) is the ratio, expressed in dB, of the rms value of the input signal at the output to the rms value of all of the other spectral components below half the clock frequency, including harmonics but excluding d.c.

SPURIOUS FREE DYNAMIC RANGE (SFDR) is the difference, expressed in dB, between the rms values of the input signal at the output and the peak spurious signal, where a spurious signal is any signal present in the output spectrum that is not present at the input.

TOTAL HARMONIC DISTORTION (THD) is the ratio expressed in dB, of the rms total of the first nine harmonic levels at the output to the level of the fundamental at the output. THD is calculated as

$$THD = 20 \times \log \sqrt{\frac{A_{f2}^2 + \ldots + A_{f10}^2}{A_{f1}^2}}$$

where

- A_{f1} is the RMS power of the fundamental (output) frequency
- A_{f2} through A_{f10} are the RMS power of the first 9 harmonic frequencies in the output spectrum (3)

ZERO SCALE OFFSET ERROR is the error in the input voltage required to cause the first code transition. It is defined as

$$V_{OFF} = V_{ZT} - V_{RB}$$

where

- V_{ZT} is the first code transition input voltage (4)

Timing Diagram

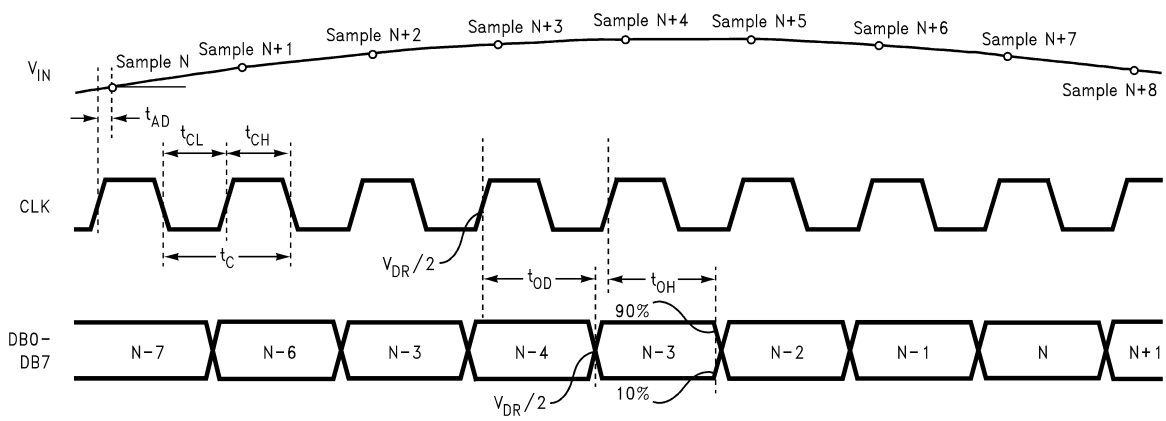

Figure 2. ADC08200 Timing Diagram

Typical Performance Characteristics

$V_A = V_{DR} = 3V$, $f_{CLK} = 200$ MHz, $f_{IN} = 50$ MHz, unless otherwise stated

INL

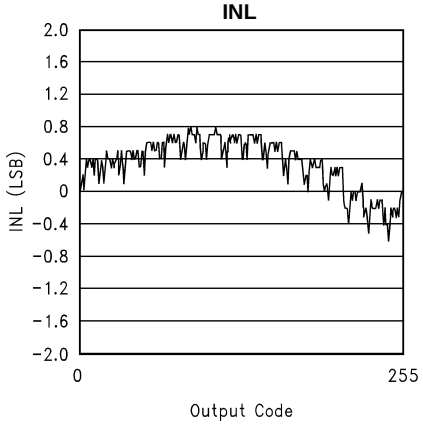

Figure 3.

INL vs. Temperature

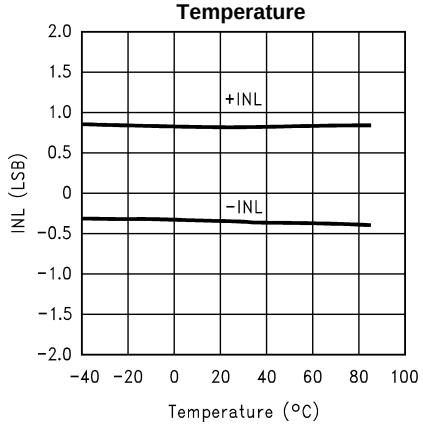

Figure 4.

INL vs. Supply Voltage

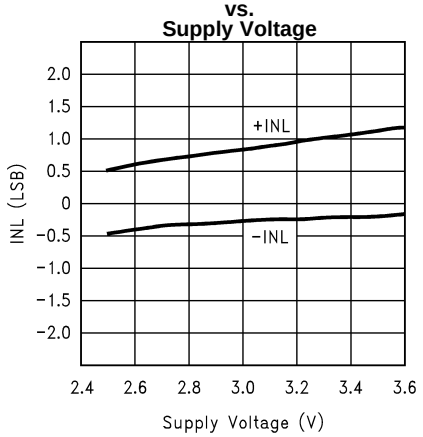

Figure 5.

INL vs. Sample Rate

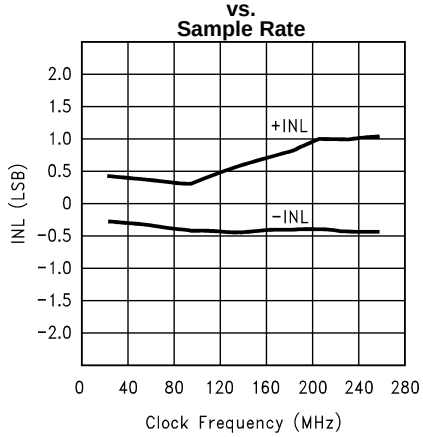

Figure 6.

DNL

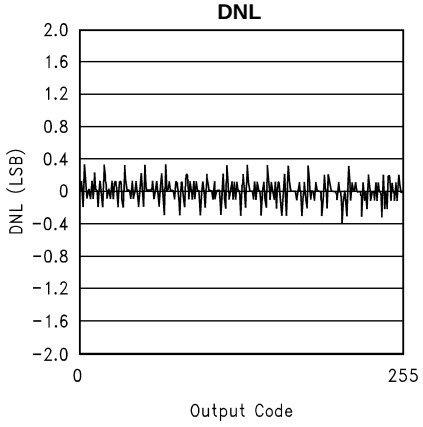

Figure 7.

DNL vs. Temperature

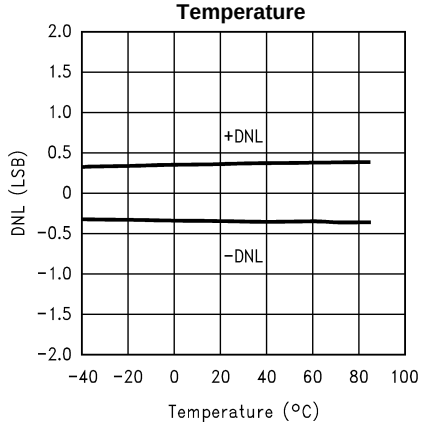

Figure 8.

Copyright © 2001–2013, Texas Instruments Incorporated

Typical Performance Characteristics (continued)

$V_A = V_{DR} = 3V$, $f_{CLK} = 200$ MHz, $f_{IN} = 50$ MHz, unless otherwise stated

DNL vs. Supply Voltage

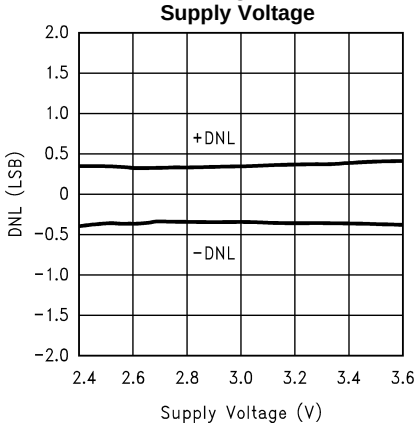

Figure 9.

DNL vs. Sample Rate

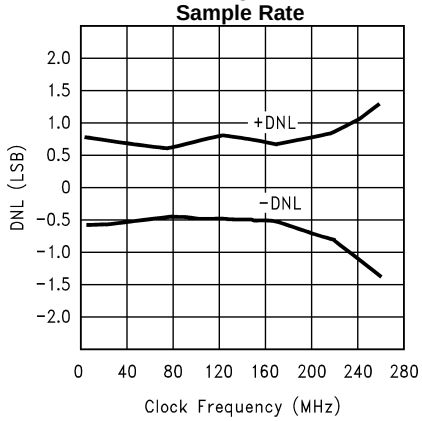

Figure 10.

SNR vs. Temperature

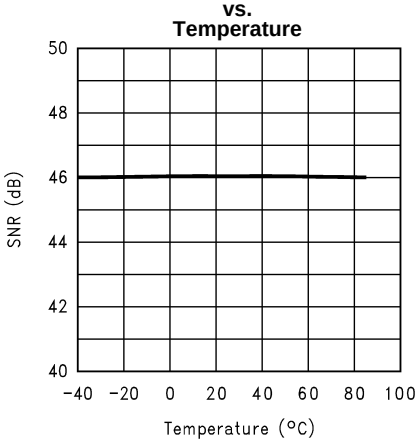

Figure 11.

SNR vs. Supply Voltage

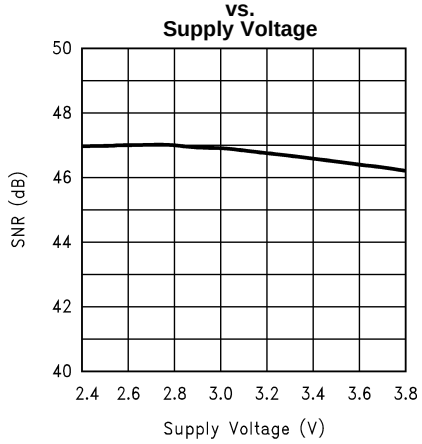

Figure 12.

SNR vs. Sample Rate

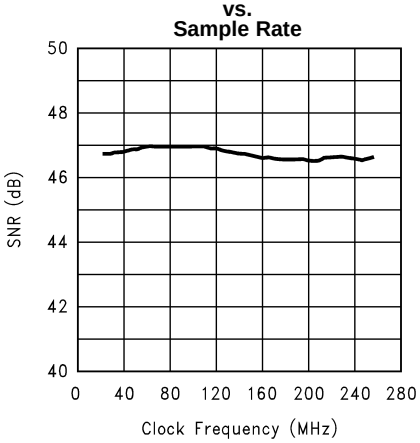

Figure 13.

SNR vs. Input Frequency

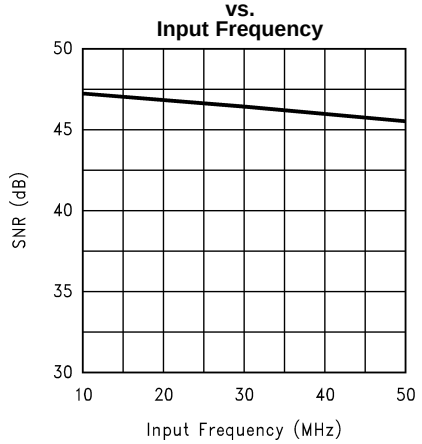

Figure 14.

Typical Performance Characteristics (continued)

$V_A = V_{DR} = 3V$, $f_{CLK} = 200$ MHz, $f_{IN} = 50$ MHz, unless otherwise stated

SNR vs. Clock Duty Cycle

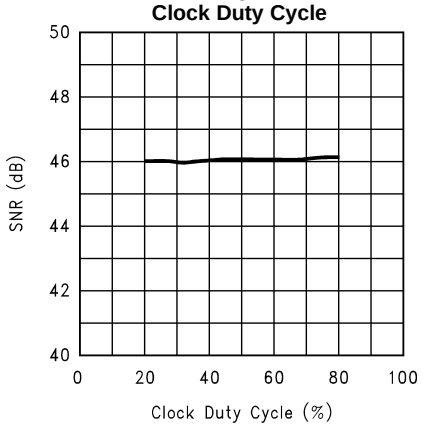

Figure 15.

Distortion vs. Temperature

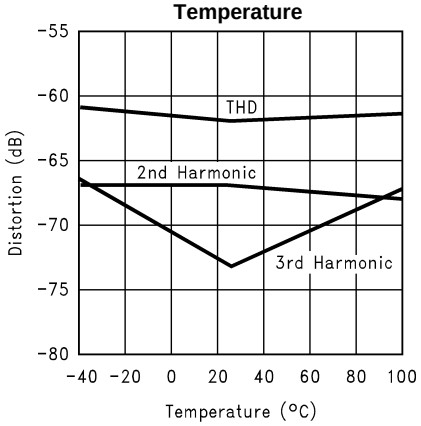

Figure 16.

Distortion vs. Supply Voltage

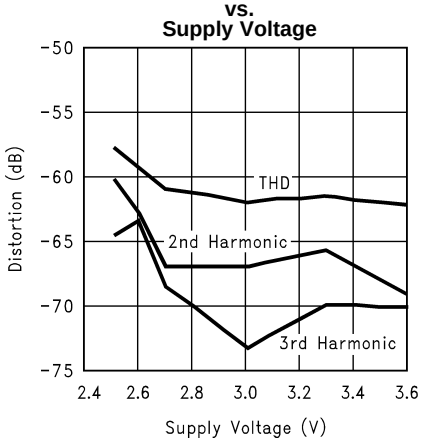

Figure 17.

Distortion vs. Sample Rate

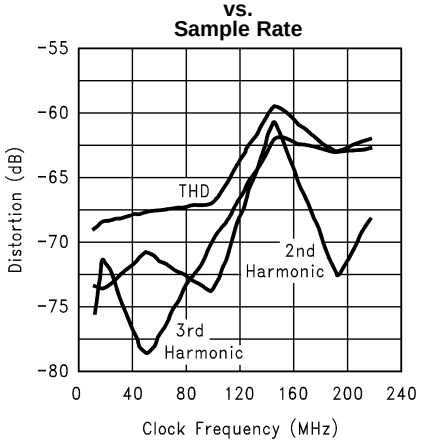

Figure 18.

Distortion vs. Input Frequency

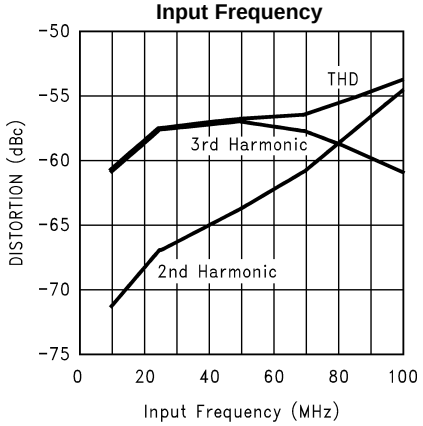

Figure 19.

Distortion vs. Clock Duty Cycle

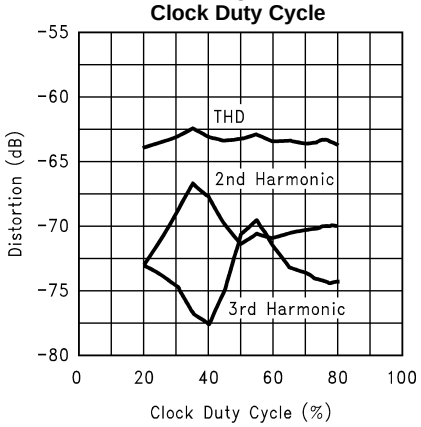

Figure 20.

Copyright © 2001–2013, Texas Instruments Incorporated

Typical Performance Characteristics (continued)

$V_A = V_{DR} = 3V$, $f_{CLK} = 200$ MHz, $f_{IN} = 50$ MHz, unless otherwise stated

SINAD/ENOB vs. Temperature

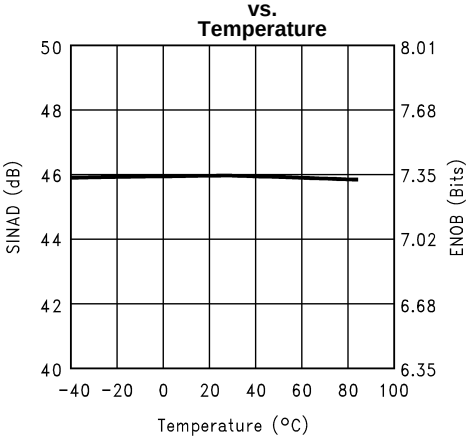

Figure 21.

SINAD/ENOB vs. Supply Voltage

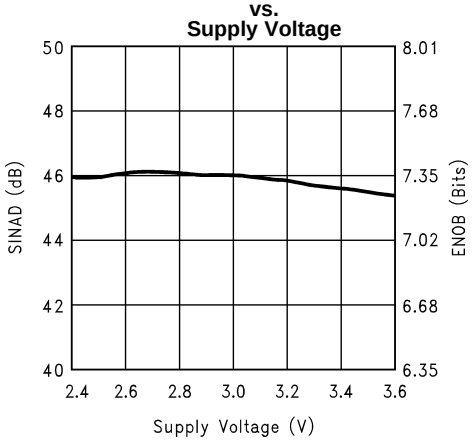

Figure 22.

SINAD/ENOB vs. Sample Rate

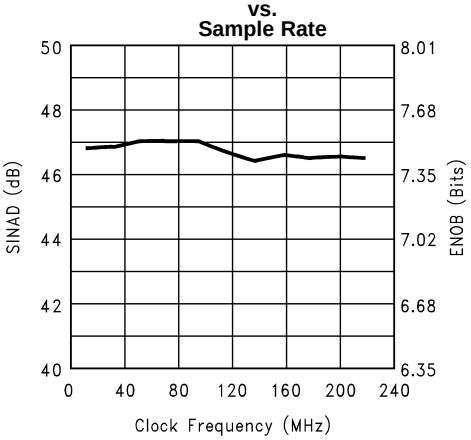

Figure 23.

SINAD/ENOB vs. Input Frequency

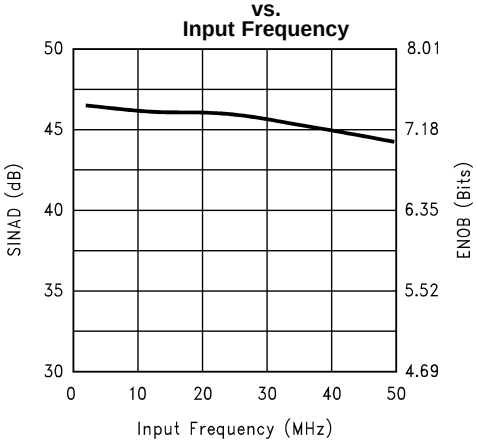

Figure 24.

SINAD/ENOB vs. Clock Duty Cycle

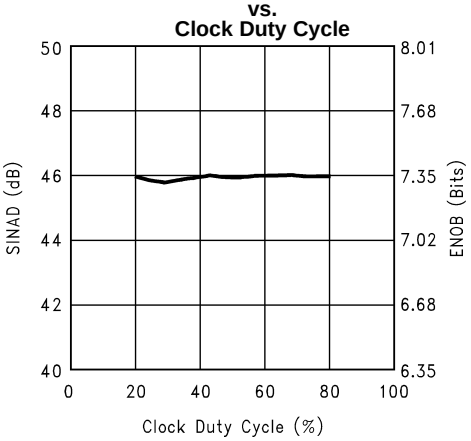

Figure 25.

Power Consumption vs. Sample Rate

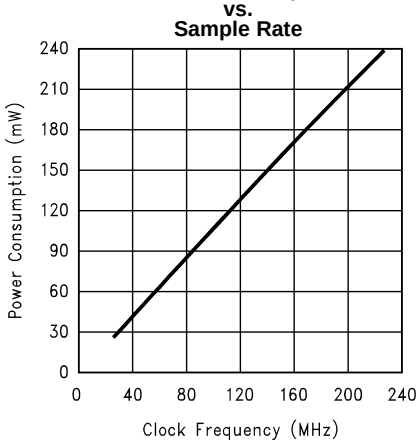

Figure 26.

Typical Performance Characteristics (continued)

$V_A = V_{DR} = 3V$, $f_{CLK} = 200$ MHz, $f_{IN} = 50$ MHz, unless otherwise stated

Spectral Response @ f_{IN} = 50 MHz

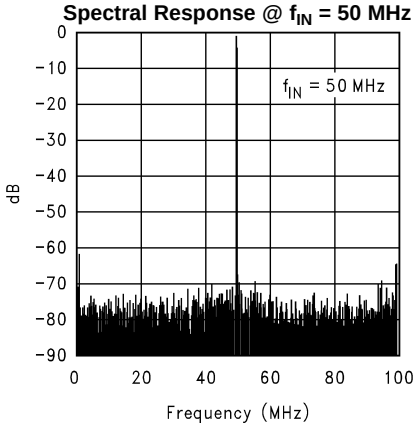

Figure 27.

Spectral Response @ f_{IN} = 76 MHz

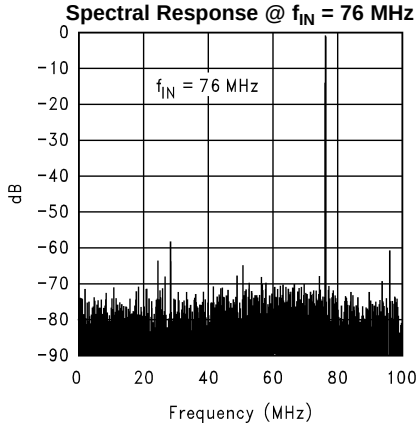

Figure 28.

Spectral Response @ f_{IN} = 99 MHz

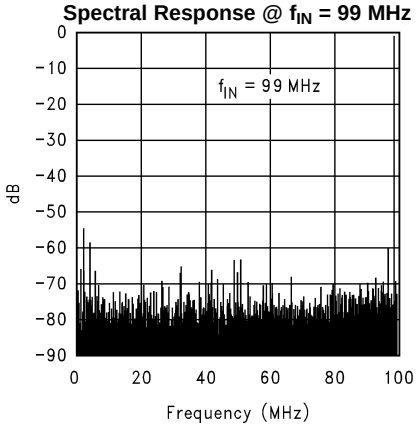

Figure 29.

Intermodulation Distortion

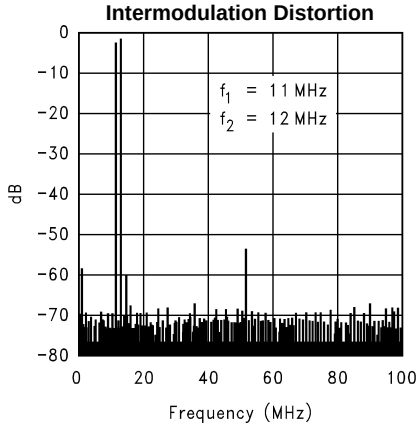

Figure 30.

Copyright © 2001–2013, Texas Instruments Incorporated

FUNCTIONAL DESCRIPTION

The ADC08200 uses a new, unique architecture that achieves over 7 effective bits at input frequencies up to and beyond 100 MHz.

The analog input signal that is within the voltage range set by V_{RT} and V_{RB} is digitized to eight bits. Input voltages below V_{RB} will cause the output word to consist of all zeroes. Input voltages above V_{RT} will cause the output word to consist of all ones.

Incorporating a switched capacitor bandgap, the ADC08200 exhibits a power consumption that is proportional to frequency, limiting power consumption to what is needed at the clock rate that is used. This and its excellent performance over a wide range of clock frequencies makes it an ideal choice as a single ADC for many 8-bit needs.

Data is acquired at the rising edge of the clock and the digital equivalent of that data is available at the digital outputs 6 clock cycles plus t_{OD} later. The ADC08200 will convert as long as the clock signal is present. The output coding is straight binary.

The device is in the active state when the Power Down pin (PD) is low. When the PD pin is high, the device is in the power down mode, where the output pins hold the last conversion before the PD pin went high and the device consumes just 1.4 mW . Holding the clock input low will further reduce the power consumption in the power down mode to about 1 mW.

APPLICATIONS INFORMATION

REFERENCE INPUTS

The reference inputs V_{RT} and V_{RB} are the top and bottom of the reference ladder, respectively. Input signals between these two voltages will be digitized to 8 bits. External voltages applied to the reference input pins should be within the range specified in the Operating Ratings Table. Any device used to drive the reference pins should be able to source sufficient current into the V_{RT} pin and sink sufficient current from the V_{RB} pin to maintain the desired voltages.

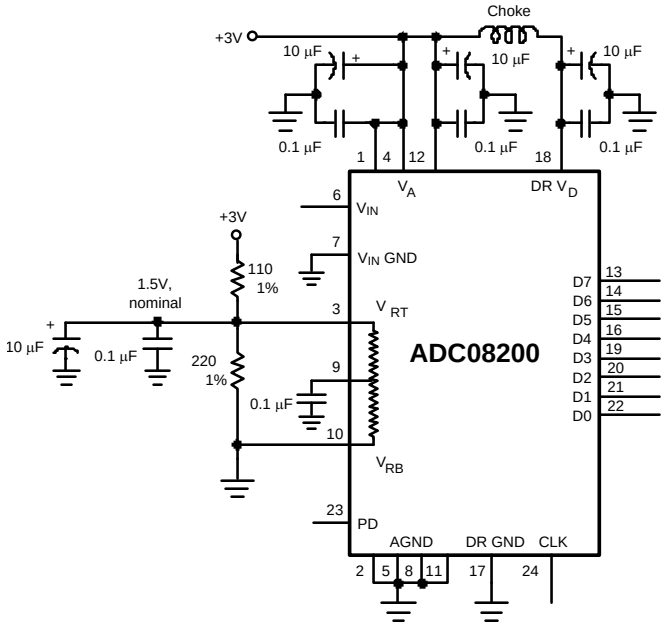

Because of the ladder and external resistor tolerances, the reference voltage of this circuit can vary too much for some applications.

Figure 31. Simple, low component count reference biasing.

The reference bias circuit of Figure 31 is very simple and the performance is adequate for many applications. However, circuit tolerances will lead to a wide reference voltage range. Better reference stability can be achieved by driving the reference pins with low impedance sources.

The circuit of Figure 32 will allow a more accurate setting of the reference voltages. The upper amplifier must be able to source the reference current as determined by the value of the reference resistor and the value of (V_{RT} − V_{RB}). The lower amplifier must be able to sink this reference current. Both amplifiers should be stable with a capacitive load. The *LM8272* was chosen because of its rail-to-rail input and output capability, its high current output and its ability to drive large capacitive loads.

The divider resistors at the inputs to the amplifiers could be changed to suit the application reference voltage needs, or the divider can be replaced with potentiometers or DACs for precise settings. The bottom of the ladder (V_{RB}) may be returned to ground if the minimum input signal excursion is 0V.

V_{RT} should always be more positive than V_{RB} by the minimum V_{RT} - V_{RB} difference in Electrical Characteristics to minimize noise. While V_{RT} may be as high as the V_A supply voltage and V_{RB} may be as low as ground, the difference between these two voltages (V_{RT} − V_{RB}) should not exceed 2.3V to prevent waveform distortion.

The V_{RM} pin is the center of the reference ladder and should be bypassed to a quiet point in the ground plane with a 0.1 µF capacitor. DO NOT leave this pin open and DO NOT load this pin with more than 10µA.

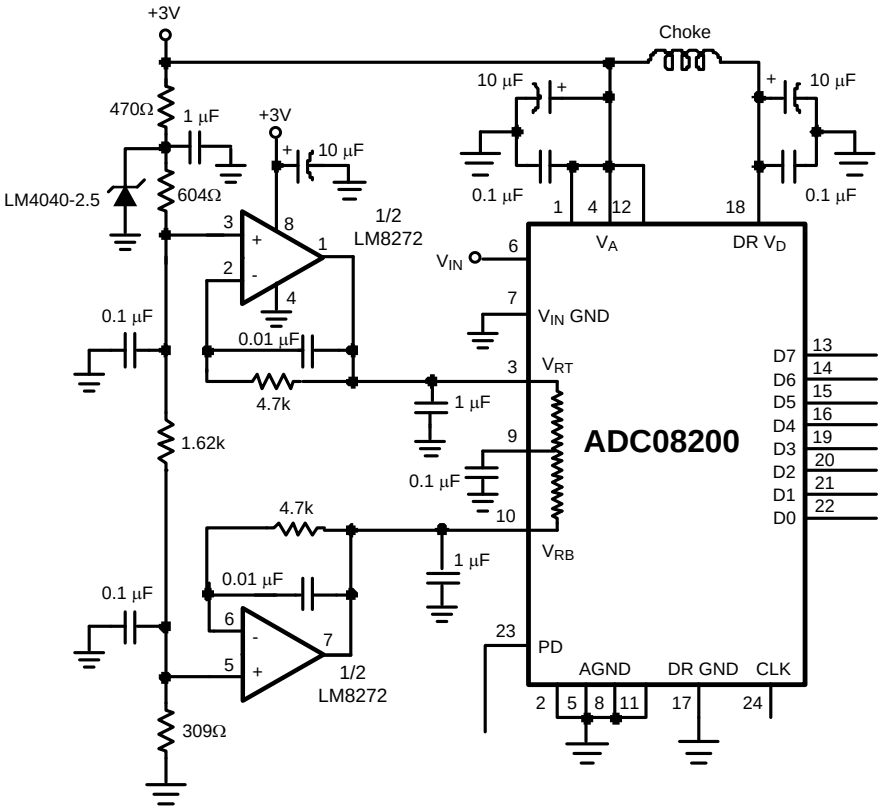

Figure 32. Driving the reference to force desired values requires driving with a low impedance source.

THE ANALOG INPUT

The analog input of the ADC08200 is a switch followed by an integrator. The input capacitance changes with the clock level, appearing as 3 pF when the clock is low, and 4 pF when the clock is high. The sampling nature of the analog input causes current spikes at the input that result in voltage spikes there. Any amplifier used to drive the analog input must be able to settle within the clock high time. The LMH6702 and the LMH6628 have been found to be good amplifiers to drive the ADC08200.

Copyright © 2001–2013, Texas Instruments Incorporated

Figure 33 shows an example of an input circuit using the LMH6702. Any input amplifier should incorporate some gain as operational amplifiers exhibit better phase margin and transient response with gains above 2 or 3 than with unity gain. If an overall gain of less than 3 is required, attenuate the input and operate the amplifier at a higher gain, as shown in Figure 33.

The RC at the amplifier output filters the clock rate energy that comes out of the analog input due to the input sampling circuit. The optimum time constant for this circuit depends not only upon the amplifier and ADC, but also on the circuit layout and board material. A resistor value should be chosen between 18Ω and 47Ω and the capacitor value chose according to the formula

$$C = \frac{1}{2 \cdot \pi \cdot R \cdot f_{CLK}} \tag{5}$$

The value of "C" in the formula above should include the ADC input capacitance when the clock is high

This will provide optimum SNR performance for Nyquist applications. Best THD performance is realized when the capacitor and resistor values are both zero, but this would compromise SNR and SINAD performance. Generally, the capacitor should not be added for undersampling applications.

The circuit of Figure 33 has both gain and offset adjustments. If you eliminate these adjustments normal circuit tolerances may result in signal clipping unless care is exercised in the worst case analysis of component tolerances and the input signal excursion is appropriately limited to account for the worst case conditions.

Full scale and offset adjustments may also be made by adjusting V_{RT} and V_{RB}, perhaps with the aid of a pair of DACs.

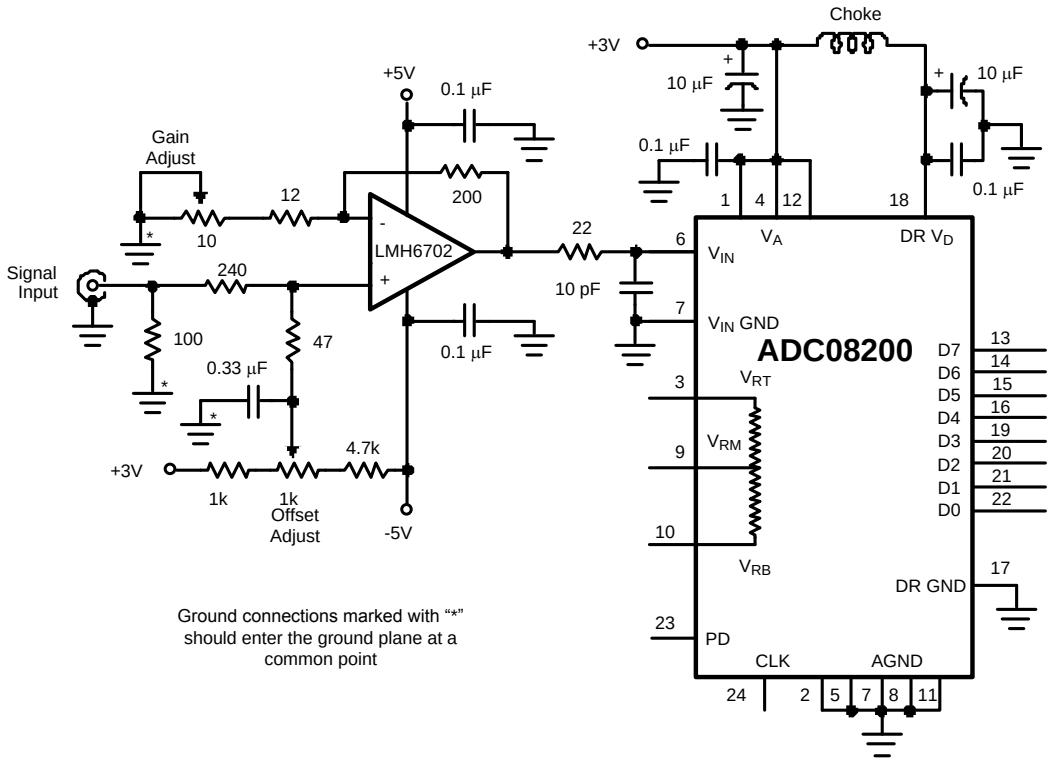

Figure 33. The input amplifier should incorporate some gain for best performance (see text).

POWER SUPPLY CONSIDERATIONS

A/D converters draw sufficient transient current to corrupt their own power supplies if not adequately bypassed. A 10 µF tantalum or aluminum electrolytic capacitor should be placed within an inch (2.5 cm) of the A/D power pins, with a 0.1 µF ceramic chip capacitor placed within one centimeter of the converter's power supply pins. Leadless chip capacitors are preferred because they have low lead inductance.

While a single voltage source is recommended for the V_A and V_{DR} supplies of the ADC08200, these supply pins should be well isolated from each other to prevent any digital noise from being coupled into the analog portions of the ADC. A choke or 27Ω resistor is recommended between these supply lines with adequate bypass capacitors close to the supply pins.

As is the case with all high speed converters, the ADC08200 should be assumed to have little power supply rejection. None of the supplies for the converter should be the supply that is used for other digital circuitry in any system with a lot of digital power being consumed. The ADC supplies should be the same supply used for other analog circuitry.

No pin should ever have a voltage on it that is in excess of the supply voltage or below ground by more than 300 mV, not even on a transient basis. This can be a problem upon application of power and power shut-down. Be sure that the supplies to circuits driving any of the input pins, analog or digital, do not come up any faster than does the voltage at the ADC08200 power pins.

THE DIGITAL INPUT PINS

The ADC08200 has two digital input pins: The PD pin and the Clock pin.

The PD Pin

The Power Down (PD) pin, when high, puts the ADC08200 into a low power mode where power consumption is reduced to about 1.4 mW with the clock running, or to about 1 mW with the clock held low. Output data is valid and accurate about 1 microsecond after the PD pin is brought low.

The digital output pins retain the last conversion output code when either the clock is stopped or the PD pin is high.

The ADC08200 Clock

Although the ADC08200 is tested and its performance is ensured with a 200 MHz clock, it typically will function well with clock frequencies from 10 MHz to 230 MHz.

The low and high times of the clock signal can affect the performance of any A/D Converter. Because achieving a precise duty cycle is difficult, the ADC08200 is designed to maintain performance over a range of duty cycles. While it is specified and performance is ensured with a 50% clock duty cycle and 200 Msps, ADC08200 performance is typically maintained with clock high and low times of 0.65 ns and 0.87 ns, respectively, corresponding to a clock duty cycle range of 13% to 82.5% with a 200 MHz clock. Note that minimum low and high times may not be simultaneously asserted.

The **CLOCK** line should be series terminated at the clock source in the characteristic impedance of that line if the clock line is longer than

$$\frac{t_r}{6 \times t_{prop}}$$

where

- t_r is the clock rise time
- t_{prop} is the propagation rate of the signal along the trace
- (6)

Typical t_{prop} is about 150 ps/inch (59 ps/cm) on FR-4 board material.

If the clock source is used to drive more than just the ADC08200, the **CLOCK** pin should be a.c. terminated with a series RC to ground such that the resistor value is equal to the characteristic impedance of the clock line and the capacitor value is

$$C \geq \frac{4 \times t_{prop} \times L}{Z_o}$$

where

- t_{PD} is the signal propagation rate down the clock line
- "L" is the line length
- Z_O is the characteristic impedance of the clock line (7)

Copyright © 2001–2013, Texas Instruments Incorporated

This termination should be located as close as possible to, but within one centimeter of, the ADC08200 clock pin. Further, this termination should be close to but beyond the ADC08200 clock pin as seen from the clock source. Typical t_{prop} is about 150 ps/inch on FR-4 board material. For FR-4 board material, the value of C becomes

$$C \geq \frac{6 \times 10^{-10} \times L}{Z_o}$$

where

- L is the length of the clock line in inches (8)

This termination should be located as close as possible to, but within one centimeter of, the ADC08200 clock pin.

LAYOUT AND GROUNDING

Proper grounding and proper routing of all signals are essential to ensure accurate conversion. A combined analog and digital ground plane should be used.

Coupling between the typically noisy digital circuitry and the sensitive analog circuitry can lead to poor performance that may seem impossible to isolate and remedy. The solution is to keep all lines separated from each other by at least six times the height above the reference plane, and to keep the analog circuitry well separated from the digital circuitry.

The DR GND connection to the ground plane should not use the same feedthrough used by other ground connections.

High power digital components should not be located on or near a straight line between the ADC or any linear component and the power supply area as the resulting common return current path could cause fluctuation in the analog input “ground” return of the ADC.

Generally, analog and digital lines should cross each other at 90° to avoid getting digital noise into the analog path. In high frequency systems, however, avoid crossing analog and digital lines altogether. Clock lines should be isolated from ALL other lines, analog AND digital. Even the generally accepted 90° crossing should be avoided as even a little coupling can cause problems at high frequencies. Best performance at high frequencies is obtained with a straight signal path.

The analog input should be isolated from noisy signal traces to avoid coupling of spurious signals into the input. Any external component (e.g., a filter capacitor) connected between the converter's input and ground should be connected to a very clean point in the ground plane.

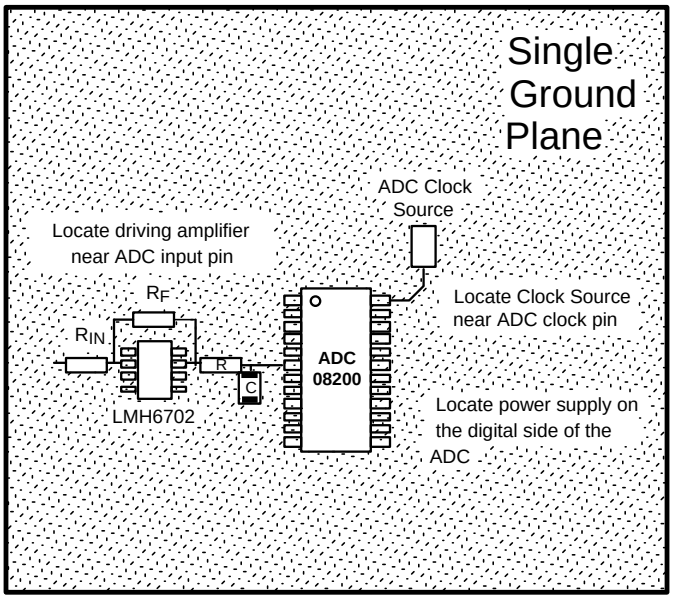

Figure 34. Layout Example

Figure 34 gives an example of a suitable layout. All analog circuitry (input amplifiers, filters, reference components, etc.) should be placed together away from any digital components.

DYNAMIC PERFORMANCE

The ADC08200 is a.c. tested and its dynamic performance is ensured. To meet the published specifications, the clock source driving the CLK input must exhibit less than 2 ps (rms) of jitter. For best a.c. performance, isolating the ADC clock from any digital circuitry should be done with adequate buffers, as with a clock tree. See Figure 35.

It is good practice to keep the ADC clock line as short as possible and to keep it well away from any other signals. Other signals can introduce jitter into the clock signal. The clock signal can also introduce noise into the analog path.

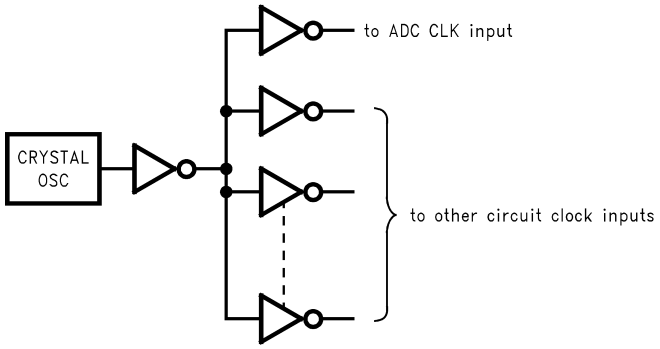

Figure 35. Isolating the ADC Clock from Digital Circuitry

COMMON APPLICATION PITFALLS

Driving the inputs (analog or digital) beyond the power supply rails. For proper operation, all inputs should not go more than 300 mV below the ground pins or 300 mV above the supply pins. Exceeding these limits on even a transient basis may cause faulty or erratic operation. It is not uncommon for high speed digital circuits (e.g., 74F and 74AC devices) to exhibit undershoot that goes more than a volt below ground. A 51Ω resistor in series with the offending digital input will usually eliminate the problem.

Care should be taken not to overdrive the inputs of the ADC08200. Such practice may lead to conversion inaccuracies and even to device damage.

Attempting to drive a high capacitance digital data bus. The more capacitance the output drivers must charge for each conversion, the more instantaneous digital current is required from V_{DR} and DR GND. These large charging current spikes can couple into the analog section, degrading dynamic performance. Buffering the digital data outputs (with a 74AF541, for example) may be necessary if the data bus capacitance exceeds 5 pF. Dynamic performance can also be improved by adding 47Ω to 56Ω series resistors at each digital output, reducing the energy coupled back into the converter input pins.

Using an inadequate amplifier to drive the analog input. As explained in THE ANALOG INPUT, the capacitance seen at the input alternates between 3 pF and 4 pF with the clock. This dynamic capacitance is more difficult to drive than is a fixed capacitance, and should be considered when choosing a driving device.

Driving the V_{RT} pin or the V_{RB} pin with devices that can not source or sink the current required by the ladder. As mentioned in REFERENCE INPUTS, care should be taken to see that any driving devices can source sufficient current into the V_{RT} pin and sink sufficient current from the V_{RB} pin. If these pins are not driven with devices than can handle the required current, these reference pins will not be stable, resulting in a reduction of dynamic performance.

Using a clock source with excessive jitter, using an excessively long clock signal trace, or having other signals coupled to the clock signal trace. This will cause the sampling interval to vary, causing excessive output noise and a reduction in SNR performance. The use of simple gates with RC timing is generally inadequate as a clock source.

Copyright © 2001–2013, Texas Instruments Incorporated

REVISION HISTORY

Changes from Revision L (March 2013) to Revision M	Page
• Changed layout of National Data Sheet to TI format	20

PACKAGING INFORMATION

Orderable Device	Status (1)	Package Type	Package Drawing	Pins	Package Qty	Eco Plan (2)	Lead/Ball Finish	MSL Peak Temp (3)	Op Temp (°C)	Top-Side Markings (4)	Samples
ADC08200CIMT	ACTIVE	TSSOP	PW	24	61	TBD	Call TI	Call TI	-40 to 85	ADC08200 CIMT	Samples
ADC08200CIMT/NOPB	ACTIVE	TSSOP	PW	24	61	Green (RoHS & no Sb/Br)	CU SN	Level-1-260C-UNLIM	-40 to 85	ADC08200 CIMT	Samples
ADC08200CIMTX/NOPB	ACTIVE	TSSOP	PW	24	2500	Green (RoHS & no Sb/Br)	CU SN	Level-1-260C-UNLIM	-40 to 85	ADC08200 CIMT	Samples

(1) The marketing status values are defined as follows:
ACTIVE: Product device recommended for new designs.
LIFEBUY: TI has announced that the device will be discontinued, and a lifetime-buy period is in effect.
NRND: Not recommended for new designs. Device is in production to support existing customers, but TI does not recommend using this part in a new design.
PREVIEW: Device has been announced but is not in production. Samples may or may not be available.
OBSOLETE: TI has discontinued the production of the device.

(2) Eco Plan - The planned eco-friendly classification: Pb-Free (RoHS), Pb-Free (RoHS Exempt), or Green (RoHS & no Sb/Br) - please check http://www.ti.com/productcontent for the latest availability information and additional product content details.
TBD: The Pb-Free/Green conversion plan has not been defined.
Pb-Free (RoHS): TI's terms "Lead-Free" or "Pb-Free" mean semiconductor products that are compatible with the current RoHS requirements for all 6 substances, including the requirement that lead not exceed 0.1% by weight in homogeneous materials. Where designed to be soldered at high temperatures, TI Pb-Free products are suitable for use in specified lead-free processes.
Pb-Free (RoHS Exempt): This component has a RoHS exemption for either 1) lead-based flip-chip solder bumps used between the die and package, or 2) lead-based die adhesive used between the die and leadframe. The component is otherwise considered Pb-Free (RoHS compatible) as defined above.
Green (RoHS & no Sb/Br): TI defines "Green" to mean Pb-Free (RoHS compatible), and free of Bromine (Br) and Antimony (Sb) based flame retardants (Br or Sb do not exceed 0.1% by weight in homogeneous material)

(3) MSL, Peak Temp. -- The Moisture Sensitivity Level rating according to the JEDEC industry standard classifications, and peak solder temperature.

(4) Only one of markings shown within the brackets will appear on the physical device.

Important Information and Disclaimer: The information provided on this page represents TI's knowledge and belief as of the date that it is provided. TI bases its knowledge and belief on information provided by third parties, and makes no representation or warranty as to the accuracy of such information. Efforts are underway to better integrate information from third parties. TI has taken and continues to take reasonable steps to provide representative and accurate information but may not have conducted destructive testing or chemical analysis on incoming materials and chemicals. TI and TI suppliers consider certain information to be proprietary, and thus CAS numbers and other limited information may not be available for release.

In no event shall TI's liability arising out of such information exceed the total purchase price of the TI part(s) at issue in this document sold by TI to Customer on an annual basis.

TAPE AND REEL INFORMATION

REEL DIMENSIONS

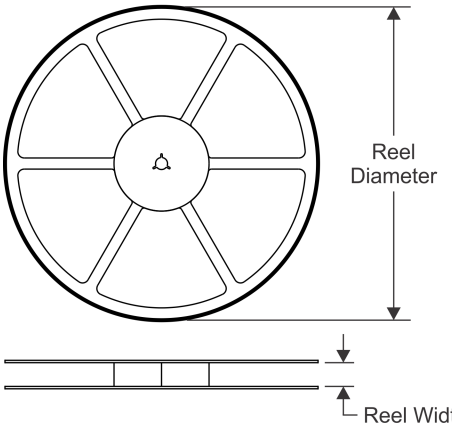

TAPE DIMENSIONS

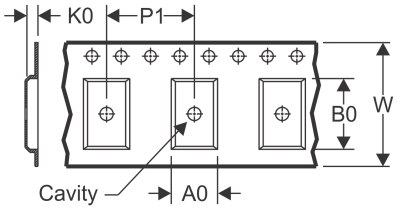

A0	Dimension designed to accommodate the component width
B0	Dimension designed to accommodate the component length
K0	Dimension designed to accommodate the component thickness
W	Overall width of the carrier tape
P1	Pitch between successive cavity centers

QUADRANT ASSIGNMENTS FOR PIN 1 ORIENTATION IN TAPE

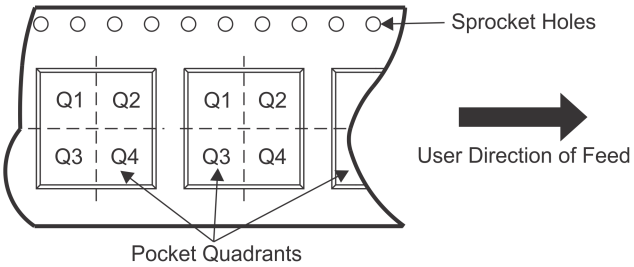

*All dimensions are nominal

Device	Package Type	Package Drawing	Pins	SPQ	Reel Diameter (mm)	Reel Width W1 (mm)	A0 (mm)	B0 (mm)	K0 (mm)	P1 (mm)	W (mm)	Pin1 Quadrant
ADC08200CIMTX/NOPB	TSSOP	PW	24	2500	330.0	16.4	6.95	8.3	1.6	8.0	16.0	Q1

TAPE AND REEL BOX DIMENSIONS

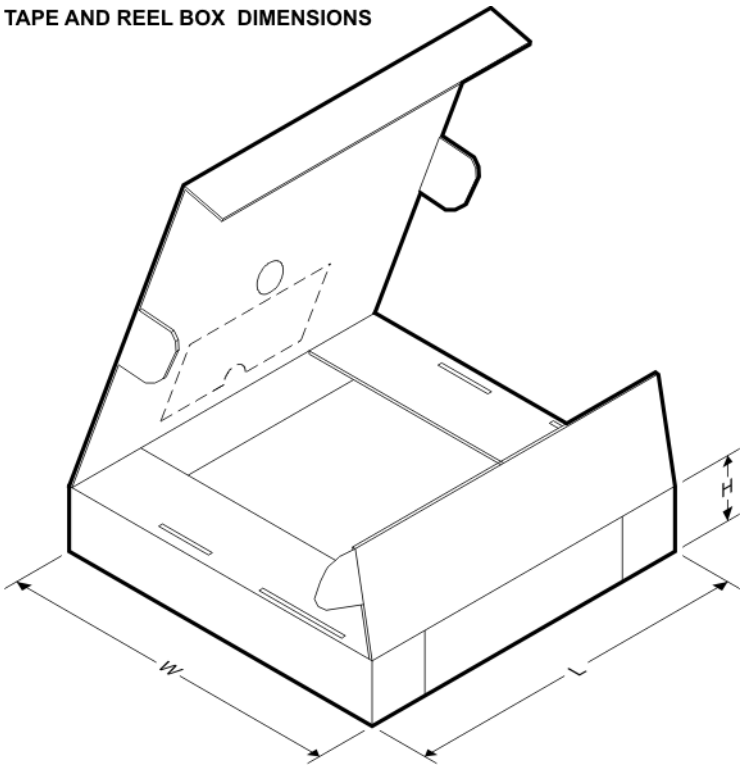

*All dimensions are nominal

Device	Package Type	Package Drawing	Pins	SPQ	Length (mm)	Width (mm)	Height (mm)
ADC08200CIMTX/NOPB	TSSOP	PW	24	2500	367.0	367.0	35.0

PW (R-PDSO-G24) PLASTIC SMALL OUTLINE

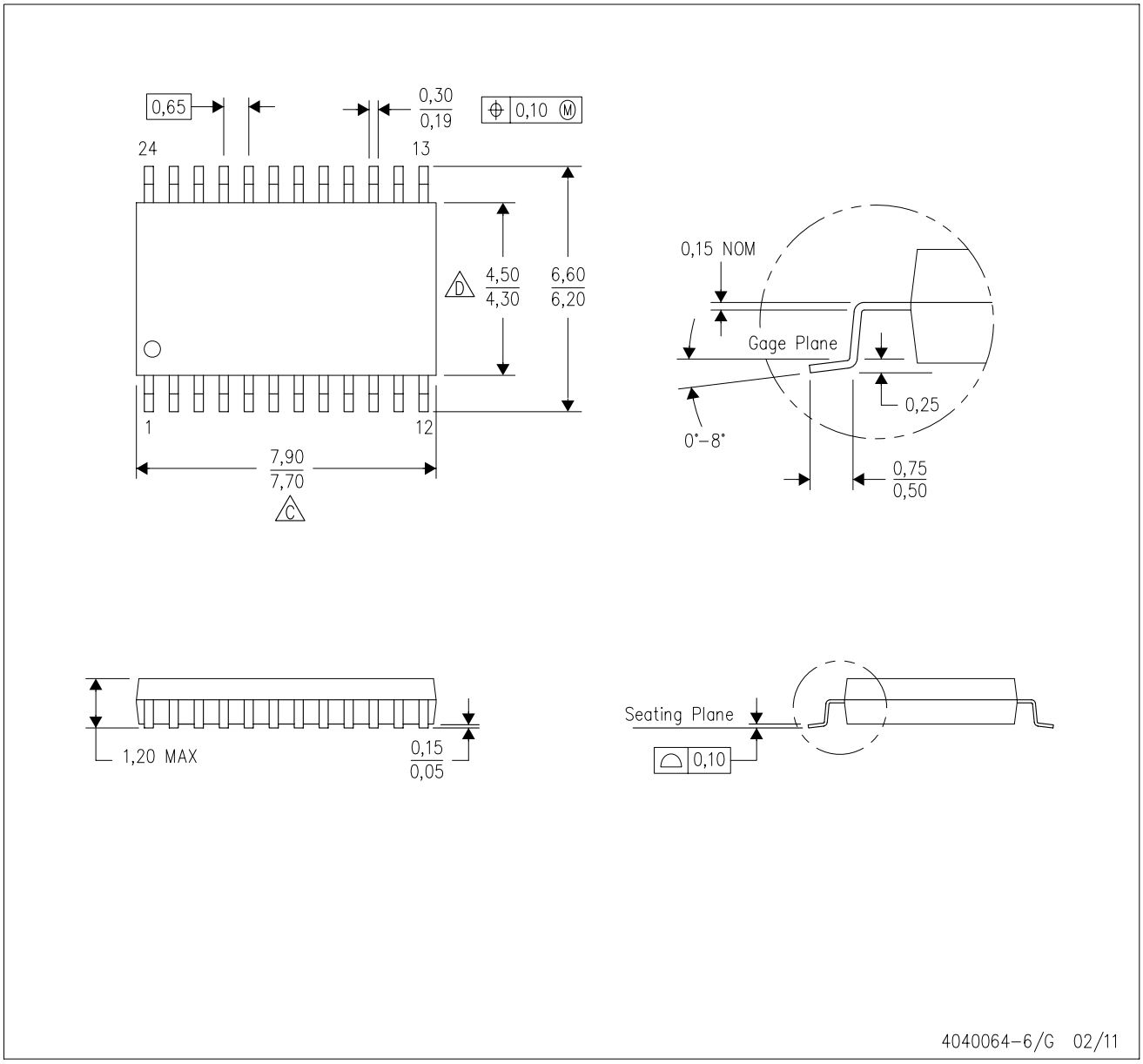

NOTES:
A. All linear dimensions are in millimeters. Dimensioning and tolerancing per ASME Y14.5M–1994.
B. This drawing is subject to change without notice.
C. Body length does not include mold flash, protrusions, or gate burrs. Mold flash, protrusions, or gate burrs shall not exceed 0,15 each side.
D. Body width does not include interlead flash. Interlead flash shall not exceed 0,25 each side.
E. Falls within JEDEC MO-153

IMPORTANT NOTICE

Texas Instruments Incorporated and its subsidiaries (TI) reserve the right to make corrections, enhancements, improvements and other changes to its semiconductor products and services per JESD46, latest issue, and to discontinue any product or service per JESD48, latest issue. Buyers should obtain the latest relevant information before placing orders and should verify that such information is current and complete. All semiconductor products (also referred to herein as “components”) are sold subject to TI’s terms and conditions of sale supplied at the time of order acknowledgment.

TI warrants performance of its components to the specifications applicable at the time of sale, in accordance with the warranty in TI’s terms and conditions of sale of semiconductor products. Testing and other quality control techniques are used to the extent TI deems necessary to support this warranty. Except where mandated by applicable law, testing of all parameters of each component is not necessarily performed.

TI assumes no liability for applications assistance or the design of Buyers’ products. Buyers are responsible for their products and applications using TI components. To minimize the risks associated with Buyers’ products and applications, Buyers should provide adequate design and operating safeguards.

TI does not warrant or represent that any license, either express or implied, is granted under any patent right, copyright, mask work right, or other intellectual property right relating to any combination, machine, or process in which TI components or services are used. Information published by TI regarding third-party products or services does not constitute a license to use such products or services or a warranty or endorsement thereof. Use of such information may require a license from a third party under the patents or other intellectual property of the third party, or a license from TI under the patents or other intellectual property of TI.

Reproduction of significant portions of TI information in TI data books or data sheets is permissible only if reproduction is without alteration and is accompanied by all associated warranties, conditions, limitations, and notices. TI is not responsible or liable for such altered documentation. Information of third parties may be subject to additional restrictions.

Resale of TI components or services with statements different from or beyond the parameters stated by TI for that component or service voids all express and any implied warranties for the associated TI component or service and is an unfair and deceptive business practice. TI is not responsible or liable for any such statements.

Buyer acknowledges and agrees that it is solely responsible for compliance with all legal, regulatory and safety-related requirements concerning its products, and any use of TI components in its applications, notwithstanding any applications-related information or support that may be provided by TI. Buyer represents and agrees that it has all the necessary expertise to create and implement safeguards which anticipate dangerous consequences of failures, monitor failures and their consequences, lessen the likelihood of failures that might cause harm and take appropriate remedial actions. Buyer will fully indemnify TI and its representatives against any damages arising out of the use of any TI components in safety-critical applications.

In some cases, TI components may be promoted specifically to facilitate safety-related applications. With such components, TI’s goal is to help enable customers to design and create their own end-product solutions that meet applicable functional safety standards and requirements. Nonetheless, such components are subject to these terms.

No TI components are authorized for use in FDA Class III (or similar life-critical medical equipment) unless authorized officers of the parties have executed a special agreement specifically governing such use.

Only those TI components which TI has specifically designated as military grade or “enhanced plastic” are designed and intended for use in military/aerospace applications or environments. Buyer acknowledges and agrees that any military or aerospace use of TI components which have ***not*** been so designated is solely at the Buyer's risk, and that Buyer is solely responsible for compliance with all legal and regulatory requirements in connection with such use.

TI has specifically designated certain components as meeting ISO/TS16949 requirements, mainly for automotive use. In any case of use of non-designated products, TI will not be responsible for any failure to meet ISO/TS16949.

Products		**Applications**	
Audio	www.ti.com/audio	Automotive and Transportation	www.ti.com/automotive
Amplifiers	amplifier.ti.com	Communications and Telecom	www.ti.com/communications
Data Converters	dataconverter.ti.com	Computers and Peripherals	www.ti.com/computers
DLP® Products	www.dlp.com	Consumer Electronics	www.ti.com/consumer-apps
DSP	dsp.ti.com	Energy and Lighting	www.ti.com/energy
Clocks and Timers	www.ti.com/clocks	Industrial	www.ti.com/industrial
Interface	interface.ti.com	Medical	www.ti.com/medical
Logic	logic.ti.com	Security	www.ti.com/security
Power Mgmt	power.ti.com	Space, Avionics and Defense	www.ti.com/space-avionics-defense
Microcontrollers	microcontroller.ti.com	Video and Imaging	www.ti.com/video
RFID	www.ti-rfid.com		
OMAP Applications Processors	www.ti.com/omap	**TI E2E Community**	e2e.ti.com
Wireless Connectivity	www.ti.com/wirelessconnectivity		

Mailing Address: Texas Instruments, Post Office Box 655303, Dallas, Texas 75265
Copyright © 2013, Texas Instruments Incorporated

ООО «ЛайфЭлектроникс» “LifeElectronics” LLC

ИНН 7805602321 КПП 780501001 Р/С 40702810122510004610 ФАКБ "АБСОЛЮТ БАНК" (ЗАО) в г.Санкт-Петербурге К/С 30101810900000000703 БИК 044030703

Компания «Life Electronics» занимается поставками электронных компонентов импортного и отечественного производства от производителей и со складов крупных дистрибьюторов Европы, Америки и Азии.

С конца 2013 года компания активно расширяет линейку поставок компонентов по направлению коаксиальный кабель, кварцевые генераторы и конденсаторы (керамические, пленочные, электролитические), за счёт заключения дистрибьюторских договоров

Мы предлагаем:

- *Конкурентоспособные цены и скидки постоянным клиентам.*
- *Специальные условия для постоянных клиентов.*
- *Подбор аналогов.*
- *Поставку компонентов в любых объемах, удовлетворяющих вашим потребностям.*

- *Приемлемые сроки поставки, возможна ускоренная поставка.*
- *Доставку товара в любую точку России и стран СНГ.*
- *Комплексную поставку.*
- *Работу по проектам и поставку образцов.*
- *Формирование склада под заказчика.*

- *Сертификаты соответствия на поставляемую продукцию (по желанию клиента).*
- *Тестирование поставляемой продукции.*
- *Поставку компонентов, требующих военную и космическую приемку.*
- *Входной контроль качества.*
- *Наличие сертификата ISO.*

В составе нашей компании организован Конструкторский отдел, призванный помогать разработчикам, и инженерам.

Конструкторский отдел помогает осуществить:

- *Регистрацию проекта у производителя компонентов.*
- *Техническую поддержку проекта.*
- *Защиту от снятия компонента с производства.*
- *Оценку стоимости проекта по компонентам.*
- *Изготовление тестовой платы монтаж и пусконаладочные работы.*

Тел: +7 (812) 336 43 04 (многоканальный)
Email: org@lifeelectronics.ru

www.lifeelectronics.ru