High-performance Video Signal Switchers

Video・Audio Signal Switchers for Car Navigation Car DVD Player

BH7649KS2

No.11066EAT05

●Description

BH7649KS2 is built-in video switch, audio switch and isolation amplifier in a single chip.

●Features

1) Video inputs selector: 7-inputs composite, Video outputs: 2-outputs 75Ω video driver, 2-outputs AMP
2) Built in Video gain switch (-6dB / -3dB / 0dB / 3dB)
3) Built in Video LPF switch (6.75MHz / Through)
4) Built in sag compensation circuit
5) Enables two load drivers
6) Video driver: Able to be used without load
7) Video driver : Able to be used without output coupling capacitor(one load)
8) Audio inputs selector: 5-inputs(Lch, Rch), Audio outputs : 2-outputs(Lch, Rch)
9) Built in Audio gain switch (0dB / -6dB)
10) Built in Audio LPF switch (24kHz / Through)
11) Built in MUTE function
12) Audio/Video all inputs: Built in isolator function
13) Selectable isolator function for different Audio/Video input channels
14) Serial control with I^2C-BUS (I^2C-BUS is compatible with fast mode of Version2.0)
15) Optional Slave address modifications (90H / 92H)

●Applications

Car navigation, Car DVD

●Absolute maximum ratings (Ta=+25℃)

Parameter	Symbol	Ratings	Unit
Supply voltage VVcc	VVccmax	10	V
Supply voltage AVcc	AVccmax	10	V
Power dissipation	Pd	1900 *1	mW
Input voltage range I^2C-BUS input (SCL, SDA)	V_{I2CIN}	-0.2 ～ 7.0	V
Input voltage range Video selector, LOGIC (VIN1, VRET1, VIN2, VRET2, VIN3, VRET3, VIN4, VRET4, VIN5, VRET5, VIN6, VRET6, VIN7, VRET7, ADR)	V_{IN1}	-0.2 ～ 5.1	V
Input voltage range Video driver (VDIN1, VDIN2)	V_{DIN1}	-0.2 ～ VVcc+0.2	V
Input voltage range Audio seletor (LIN1, ARET1, RIN1, LIN2, ARET2, RIN2, LIN3, ARET3, RIN3, LIN4, ARET4, RIN4, LIN5, ARET5, RIN5)	V_{AIN1}	-0.2 ～ AVcc+0.2	V
Storage temperature range	Tstg	-55～+125	℃

*1 When mounting on a 70mm×70mm×1.6mm 4-layer glass epoxy board
Reduced by 19mW/℃ at Ta = +25℃ or higher

●Operating conditions

Parameter	Symbol	Ratings	Unit
Supply voltage VVcc	VVcc	+7.5 ～ +9.5	V
Supply voltage AVcc	AVcc	+7.5 ～ +9.5	V
Operating temperature range	Topr	-40 ～ +85	℃

* This product is not designed for protection against radioactive rays.

© 2011 ROHM Co., Ltd. All rights reserved.

●**Electric characteristic** (Unless otherwise specified, Ta=+25℃, VVcc=8.5V, AVcc=8.5V)

Parameter			Symbol	Limits Min.	Limits Typ.	Limits Max.	Unit	Conditions
CHIP	Circuit current1		ICC1	-	34	48	mA	No signal(VIDEO)
	Circuit current2		ICC2	-	23	32	mA	No signal(AUDIO)
VIDEO	Voltage gain	-6dB	$GVM6_V$	-6.4	-6.0	-5.6	dB	Vin=1.0Vpp, f=100kHz
		-3dB	$GVM3_V$	-3.4	-3.0	-2.6	dB	Vin=1.0Vpp, f=100kHz
		0dB	$GV0_V$	-0.4	0.0	0.4	dB	Vin=1.0Vpp, f=100kHz
		3dB	$GV3_V$	2.6	3.0	3.4	dB	Vin=1.0Vpp, f=100kHz
		6dB	$GV6_V$	5.6	6.0	6.4	dB	Vin=1.0Vpp, f=100kHz
	Frequency characteristics1 [f=6.75MHz LPF MODE]		$GF11_V$	-1.5	0.0	1.0	dB	Vin=1.0Vpp, f=6.75MHz/100kHz
			$GF12_V$	-	-30	-20	dB	Vin=1.0Vpp, f=27MHz/100kHz
	Frequency characteristics 2_1 [THROUGH MODE_-6dB]		$GF2_V$	-0.6	0.9	1.9	dB	Vin=1.0Vpp, f=10MHz/100kHz Gain=-6dB
	Frequency characteristics 2_2 [THROUGH MODE_-3dB]		$GF2_V$	-0.7	0.8	1.8	dB	Vin=1.0Vpp, f=10MHz/100kHz Gain=-3dB
	Frequency characteristics 2_3 [THROUGH MODE_0dB]		$GF2_V$	-0.7	0.8	1.8	dB	Vin=1.0Vpp, f=10MHz/100kHz Gain=0dB
	Frequency characteristics 2_4 [THROUGH MODE_3dB]		$GF2_V$	-1.0	0.5	1.5	dB	Vin=1.0Vpp, f=10MHz/100kHz Gain=3dB
	Frequency characteristics 3 [VDOUT1, VDOUT2]		$GF3_V$	-3.0	-0.5	1.0	dB	Vin=1.0Vpp, f=15MHz
	Maximum output level		VOM_V	2.6	-	-	Vp-p	f=10kHz, THD=1.0%
	Cross talk		CT_V	-	-60	-50	dB	Vin=1.0Vpp, f=4.43MHz
	MUTE attenuation		MT_V	-	-60	-50	dB	Vin=1.0Vpp, f=4.43MHz
	Common mode rejection ratio		CMRR	-	-60	-40	dB	Vin=1Vpp, f=20kHz
AUDIO	Voltage gain	0dB	$GV0_A$	-0.4	0.0	0.4	dB	Vin=1Vrms, f=1kHz
		-6dB	$GV6_A$	-6.4	-6.0	-5.6	dB	Vin=1Vrms, f=1kHz
	Frequency characteristics 1 [f=24kHz LPF MODE]		$GF11_A$	-2.0	-0.5	1.0	dB	Vin=1Vrms, f=24kHz/1kHz
			$GF12_A$	-	-26	-15	dB	Vin=1Vrms, f=96kHz/1kHz
	Frequency characteristics 2 [THROUGH MODE]		$GF2_A$	-1.0	0.0	1.0	dB	Vin=1Vrms, f=50kHz/1kHz
	Total harmonic distortion		THD+N	-	0.002	0.1	%	Vin=1Vrms, f=1kHz ※1
	Maximum output level		VOM_A	2.0	2.4	-	Vrms	f=1kHz, THD<0.3% ※1
	Cross talk		CT_A	-	-100	-85	dB	Vin=2Vrms, f=1kHz ※1
	MUTE attenuation		MT_A	-	-100	-85	dB	Vin=2Vrms, f=1kHz ※1
	Residual noise1 [THROUGH MODE]		N_A	-	10	-	uVrms	(THROUGH MODE select) ※2
	Residual noise2 [f=24kHz LPF MODE]		N_{A_LPF}	-	20	-	uVrms	LOUT1, ROUT1(LPF select) ※2
	Common mode rejection ratio		CMRR	-	-70	-40	dB	Vin=1Vrms, f=1kHz
	PSRR		$PSRR_A$	-	-50	-	dB	※3
I^2C	[SCL,SDA]							
	VIL ※4		Vin1L	0	-	1.0	V	Low Level input voltage
	VIH ※4		Vin1H	2.0	-	5.5	V	High Level input voltage
	Input bias current		IINI2C	-10	0	10	uA	
	SDA output voltage		VoL	0	-	0.4	V	at 3.0mA sink current
	[ADR]							
	VIL		Vin2L	0	-	1.0	V	Low Level input voltage
	VIH		Vin2H	2.0	-	5.1	V	High Level input voltage ※5
	Input impedance		ZIN_{ADR}	70	100	130	kΩ	Pull-Down Resister

※1 400HzHPF + 30kHzLPF ON
※2 IHF-A Filter ON
※3 Vin=0.3Vpp, f=100Hz at VCC, 30kHzLPF ON
※4 <I^2C-BUS(SCL,SDA) SPEC> VIL:-0.5[V]～0.3V_{DD}[V], VIH:0.7 V_{DD}[V]～V_{DD}+0.5 or 5.5[V] (V_{DD}:I2C-BUS Supply voltage)
<BH7649KS2> Be sure to use as VIL:0.0[V]～1.0[V], VIH:2.0[V]～5.5[V]
※5 We recommend that it is connect ADR Pin to 38Pin(VREG Pin) when ADR Pin is used as "H".

© 2011 ROHM Co., Ltd. All rights reserved.

●Block Diagram (Audio block)

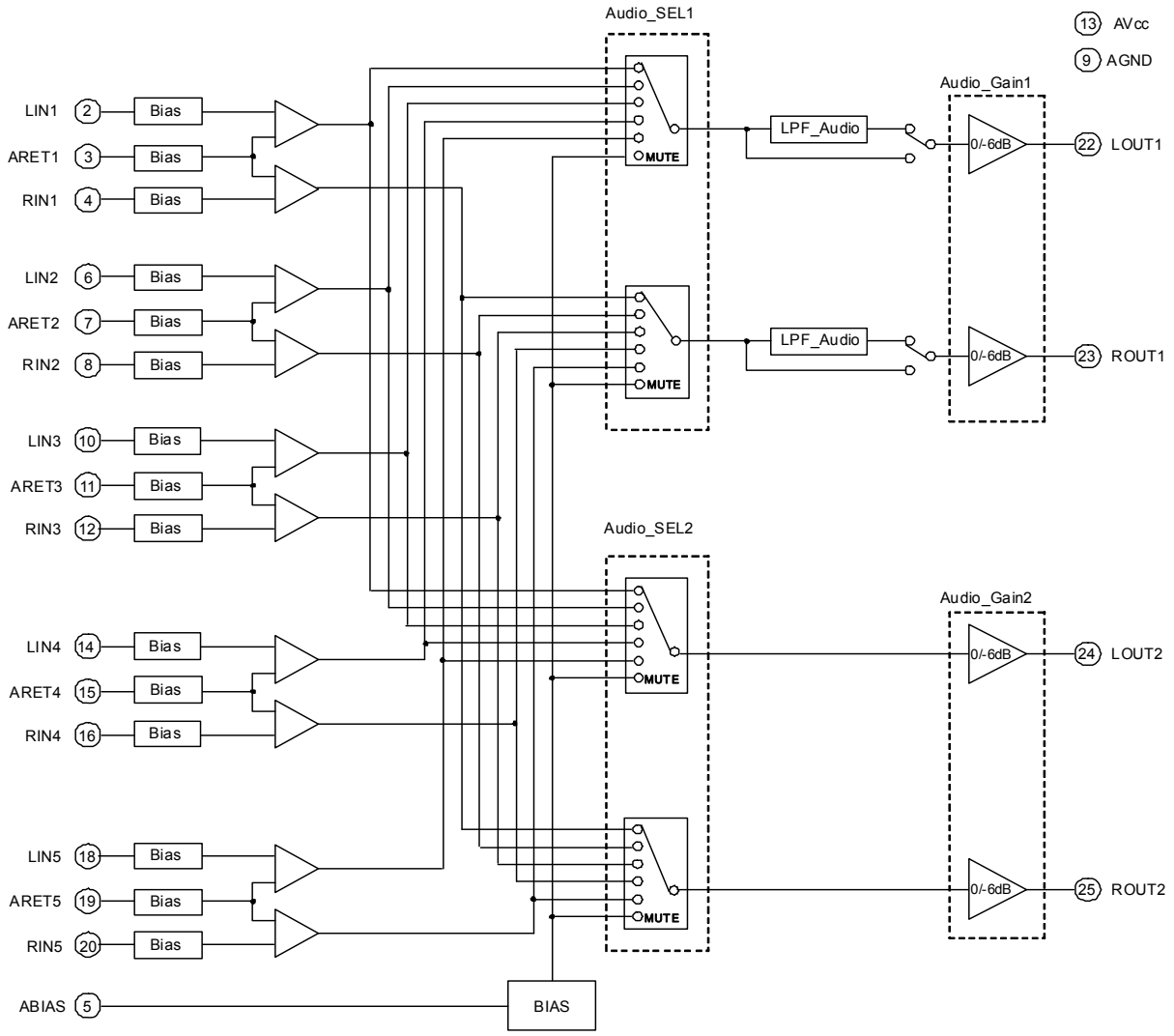

Fig.1 Block Diagram

© 2011 ROHM Co., Ltd. All rights reserved.

●Block Diagram (Video block)

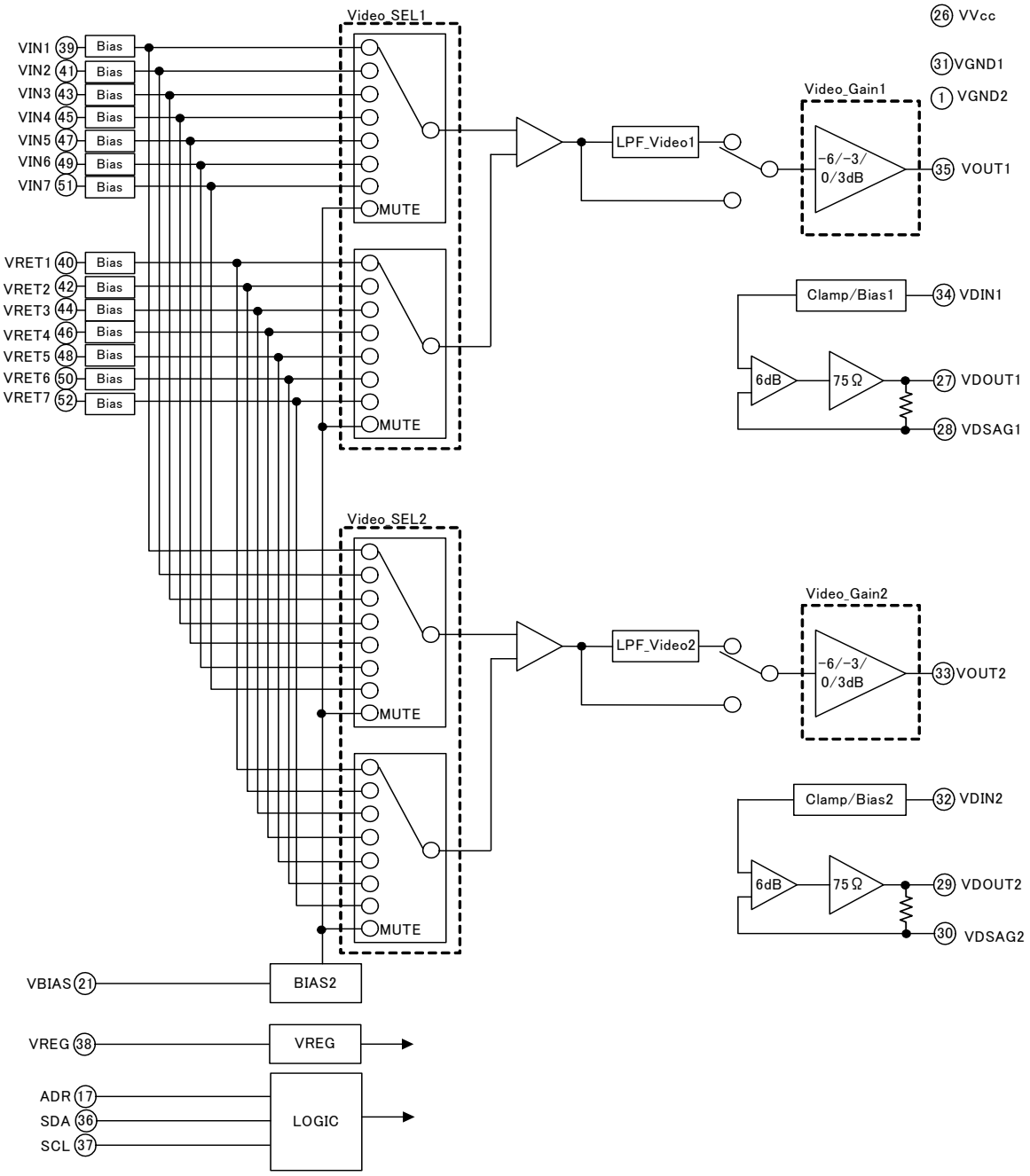

Fig.2 Block Diagram

© 2011 ROHM Co., Ltd. All rights reserved.

●Package outlines

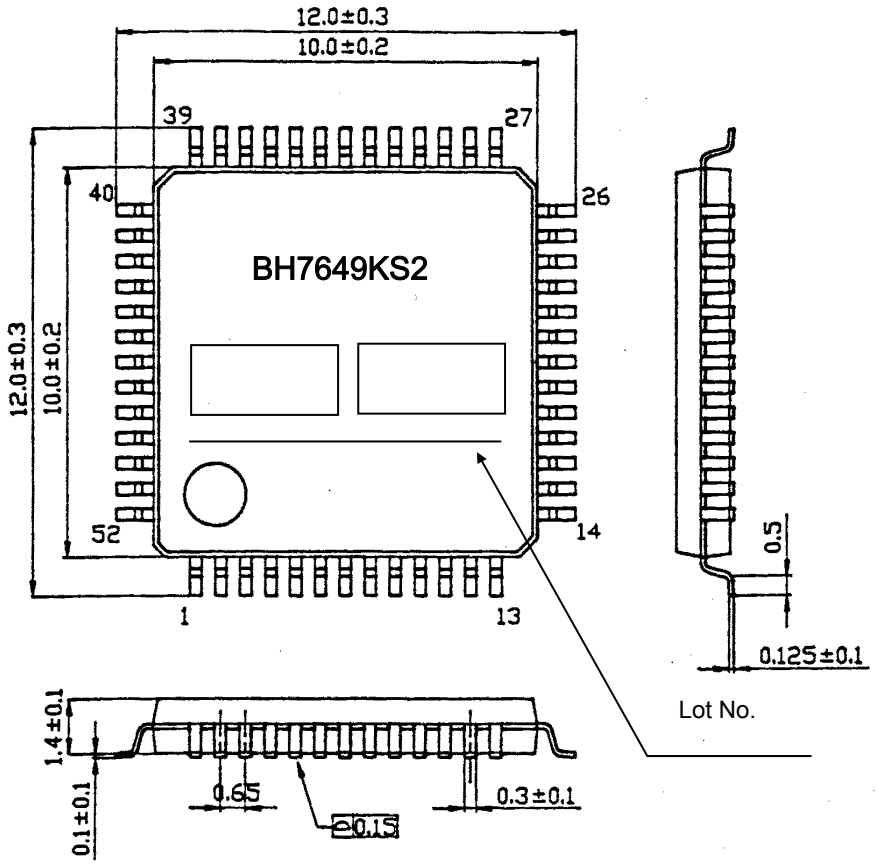

SQFP-T52(UNIT : mm)

Fig.3 Package outlines

●Pin assignment table

No.	I/O	Pin Name	No.	I/O	Pin Name	No.	I/O	Pin Name	No.	I/O	Pin Name
1	-	VGND2	14	I	LIN4	27	O	VDOUT1	40	I	VRET1
2	I	LIN1	15	I	ARET4	28	O	VDSAG1	41	I	VIN2
3	I	ARET1	16	I	RIN4	29	O	VDOUT2	42	I	VRET2
4	I	RIN1	17	I	ADR	30	O	VDSAG2	43	I	VIN3
5	-	ABIAS	18	I	LIN5	31	-	VGND1	44	I	VRET3
6	I	LIN2	19	I	ARET5	32	I	VDIN2	45	I	VIN4
7	I	ARET2	20	I	RIN5	33	O	VOUT2	46	I	VRET4
8	I	RIN2	21	-	VBIAS	34	I	VDIN1	47	I	VIN5
9	-	AGND	22	O	LOUT1	35	O	VOUT1	48	I	VRET5
10	I	LIN3	23	O	ROUT1	36	I/O	SDA	49	I	VIN6
11	I	ARET3	24	O	LOUT2	37	I	SCL	50	I	VRET6
12	I	RIN3	25	O	ROUT2	38	O	VREG	51	I	VIN7
13	-	AVcc	26	-	VVcc	39	I	VIN1	52	I	VRET7

© 2011 ROHM Co., Ltd. All rights reserved.

●I²C－BUS Control specification I²C-BUS Format (WRITE MODE)

S	SLAVE ADDRESS	A	DATA1	A	DATA2	A	DATA3	A	DATA4	A	DATA5	A	DATA6	A	P

S : Start Condition
A : Acknowledge
P : Stop Condition

	b7	b6	b5	b4	b3	b2	b1	b0
SLAVE ADDRESS	1	0	0	1	0	0	ADR	0
DATA1	Video_SEL1			Video_SEL2			LPF_Video1	LPF_Video2
DATA2	Video_Gain1		Video_Gain2		Clamp/Bias1	Clamp/Bias2	Video_power -off1	Video_power -off2
DATA3	Audio_SEL1			Audio_SEL2			0	LPF_Audio
DATA4	0	0	Audio_Gain1	Audio_Gain2	0	0	0	0
DATA5	Isolation_V1	Isolation_V2	Isolation_V3	Isolation_V4	Isolation_V5	Isolation_V6	Isolation_V7	0
DATA6	Isolation_A1	Isolation_A2	Isolation_A3	Isolation_A4	Isolation_A5	0	0	0

When power is turned on, all parts start from LOW condition.
[Prohibited matter] The terminal inputs of ADR do not change from start to stop condition. Operation error might happen.

© 2011 ROHM Co., Ltd. All rights reserved.

●Selecting input switch / Setting mode

Data name	Status	Data name	Status	Data name	Status
ADR	Sets the slave address by ADR pin	Clamp/Bias1	Input mode selectors (Clamp/Bias1 : VDIN1)	Isolation_V1	Isolator function selectors (VIN1)
	0 : 90H ADR pin = “ L ”		0 : Clamp input mode (VDOUT1:direct drive)		0 : On
	1 : 92H ADR pin =” H ”		1 : Bias input mode (VDOUT1:output coupling “C”)		1 : Off
Video_SEL1	Signal input selectors (Video_SEL1)	Clamp/Bias2	Input mode selectors (Clamp/Bias2 : VDIN2)	Isolation_V2	Isolator function selectors (VIN2)
	000 : VIN1		0 : Clamp input mode (VDOUT2 direct drive)		0 : On
	001 : VIN2		1 : Bias input mode (VDOUT2:output coupling “C”)		1 : Off
	010 : VIN3	Video_power-off1	Power-off function selectors (VDIN1 - VDOUT1)	Isolation_V3	Isolator function selectors (VIN3)
	011 : VIN4		0 : On		0 : On
	100 : VIN5		1 : Off		1 : Off
	101 : VIN6	Video_power-off2	Power-off function selectors (VDIN2 - VDOUT2)	Isolation_V4	Isolator function selectors (VIN4)
	110 : VIN7		0 : On		0 : On
	111 : MUTE		1 : Off		1 : Off
Video_SEL2	Signal input selectors (Video_SEL2)	Audio_ SEL1	Signal input selectors (Audio_ SEL1)	Isolation_V5	Isolator function selectors (VIN5)
	000 : VIN1		000 : LIN1, RIN1		0 : On
	001 : VIN2		001 : LIN2, RIN2		1 : Off
	010 : VIN3		010 : LIN3, RIN3	Isolation_V6	Isolator function selectors (VIN6)
	011 : VIN4		011 : LIN4, RIN4		0 : On
	100 : VIN5		100 : LIN5, RIN5		1 : Off
	101 : VIN6		101 : MUTE	Isolation_V7	Isolator function selectors (VIN7)
	110 : VIN7		110 : MUTE		0 : On
	111 : MUTE		111 : MUTE		1 : Off
LPF_Video1	LPF function selectors of VOUT1	Audio_ SEL2	Signal input selectors (Audio_ SEL2)	Isolation_A1	Isolator function selectors (LIN1, RIN1)
	0 : 6.75MHz		000 : LIN1, RIN1		0 : On
	1 : Through		001 : LIN2, RIN2		1 : Off
LPF_Video2	LPF function selectors of VOUT2		010 : LIN3, RIN3	Isolation_A2	Isolator function selectors (LIN2, RIN2)
	0 : 6.75MHz		011 : LIN4, RIN4		0 : On
	1 : Through		100 : LIN5, RIN5		1 : Off
Video_Gain1	Output gain selectors (Video_Gain1)		101 : MUTE	Isolation_A3	Isolator function selectors (LIN3, RIN3)
	00 : -6dB		110 : MUTE		0 : On
	01 : -3dB		111 : MUTE		1 : Off
	10 : 0dB	LPF_Audio	LPF function selectors of LOUT1 and ROUT1	Isolation_A4	Isolator function selectors (LIN4, RIN4)
	11 : 3dB		0 : Through		0 : On
Video_Gain2	Output gain selectors (Video_Gain2)		1 : 24kHz		1 : Off
	00 : -6dB	Audio_ Gain1	Output gain selectors (Audio_Gain1)	Isolation_A5	Isolator function selectors (LIN5, RIN5)
	01 : -3dB		0 : 0dB		0 : On
	10 : 0dB		1 : -6dB		1 : Off
	11 : 3dB	Audio_ Gain2	Output gain selectors (Audio_Gain2)		
			0 : 0dB		
			1 : -6dB		

© 2011 ROHM Co., Ltd. All rights reserved.

●Application circuit example

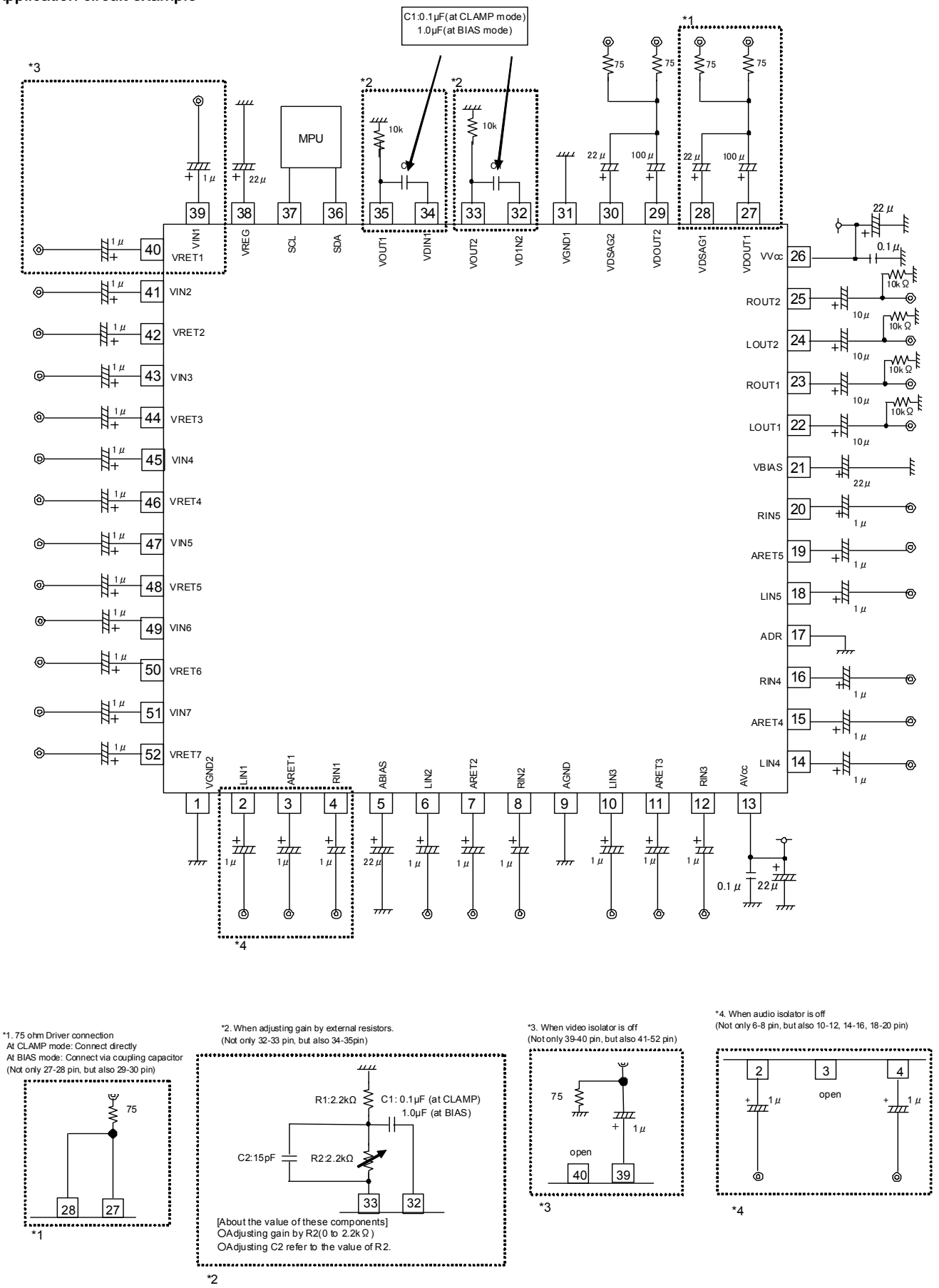

Fig.4

© 2011 ROHM Co., Ltd. All rights reserved.

●Evaluation board circuit diagram

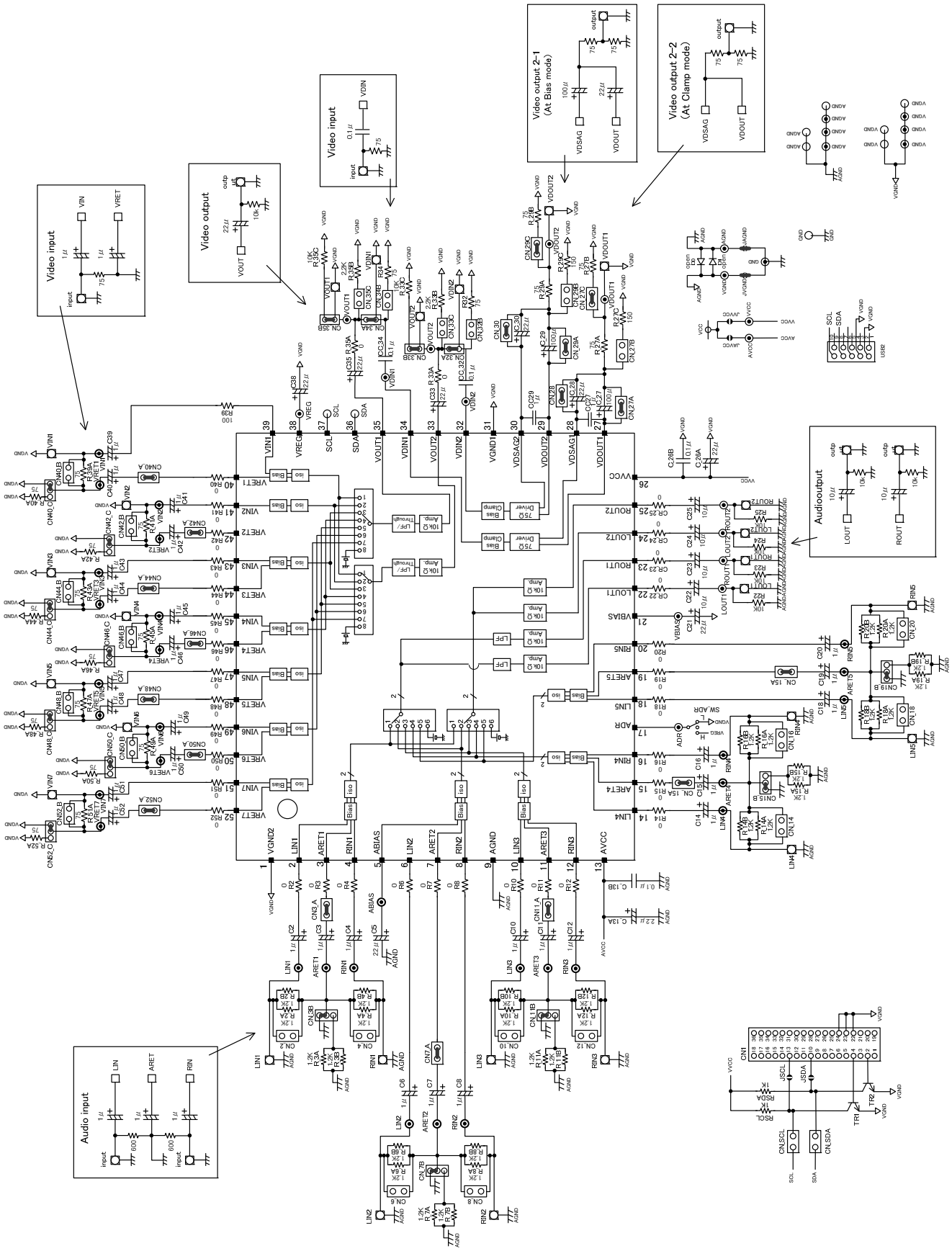

Fig.5

© 2011 ROHM Co., Ltd. All rights reserved.

●Evaluation board PCB layer

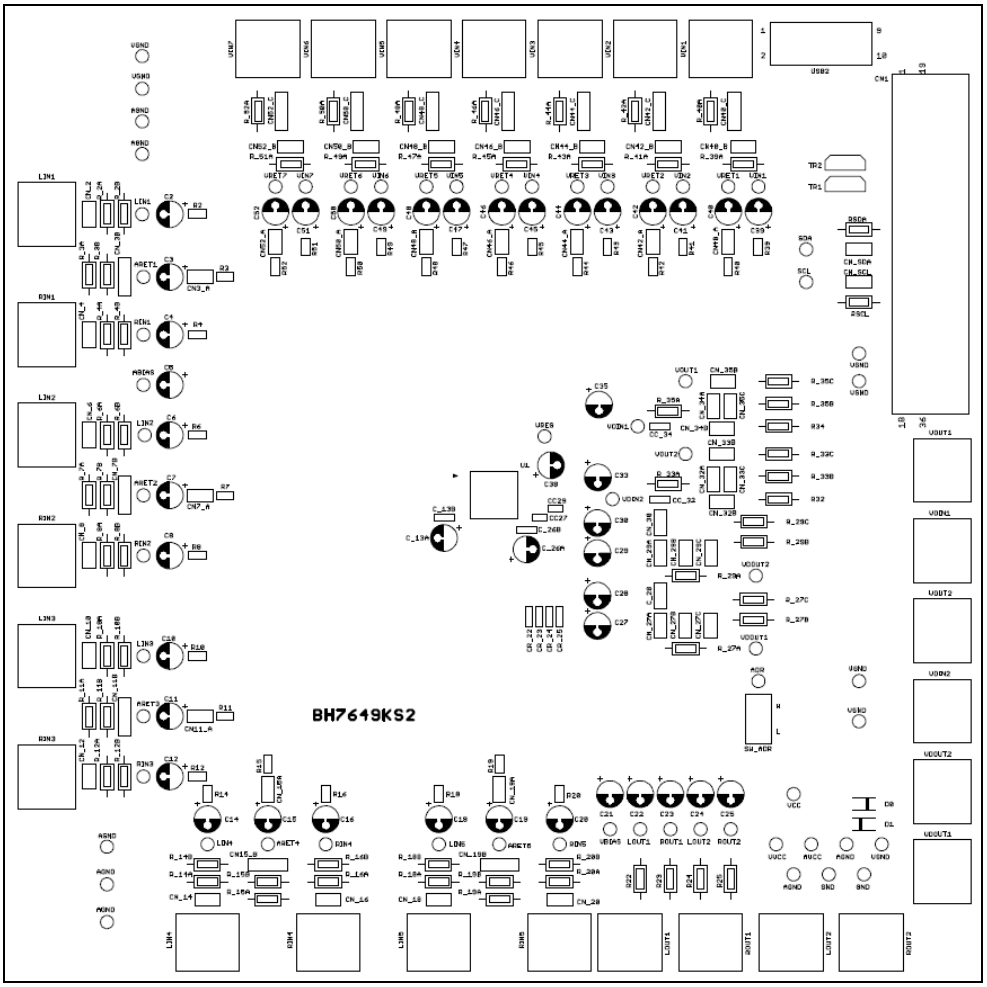

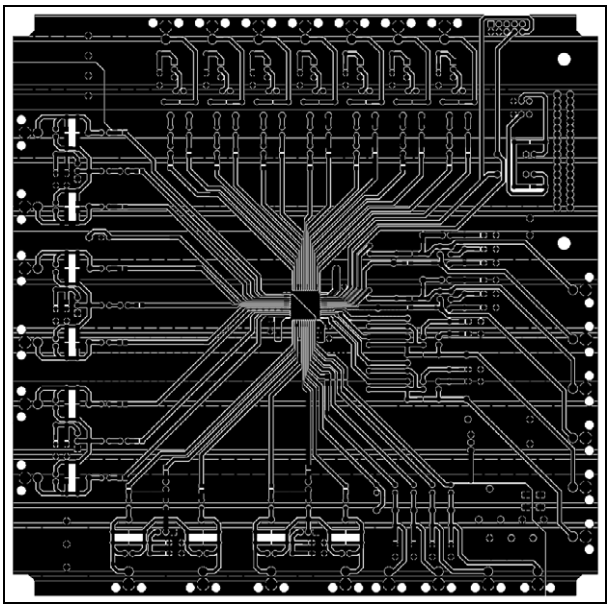

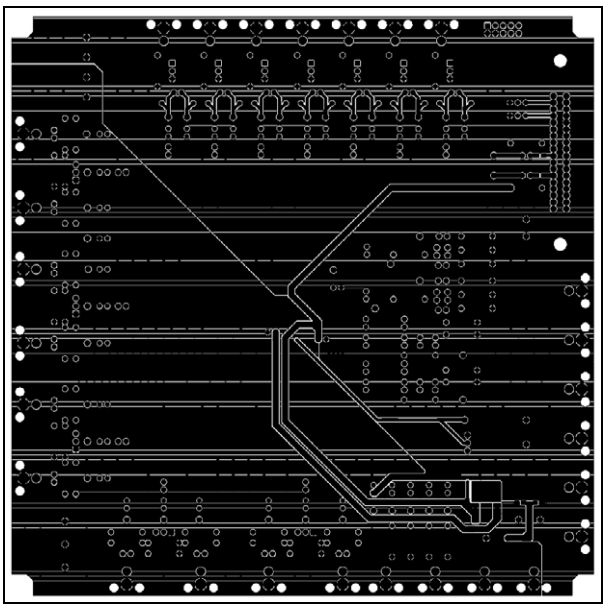

Fig.6

© 2011 ROHM Co., Ltd. All rights reserved.

●Notes for use

(1) Absolute maximum ratings
If the absolute maximum ratings for applied voltage and/or operation temperature are exceeded, LSI damage may result. Therefore, do not apply voltage or use in a temperature that exceeds these absolute maximum ratings. If it is possible that absolute maximum ratings will be exceeded, use a physical safety device such as a fuse and make sure that no conditions that might exceed the absolute maximum ratings will be applied to the LSI IC.

(2) GND potential
Regardless of the operation mode, the voltage of the GND pin should be at least the minimum voltage. Actually check whether or not the voltage at each pin, including transient phenomena, is less than the
GND pin voltage.

(3) Thermal design
The thermal design should be done using an ample margin that takes into consideration the allowable dissipation under actual use conditions. Perform thermal design in which there are adequate margins by taking into account the allowable power dissipation in actual states of use.

(4) Shorts between pins and mounting errors
When mounting LSI ICs onto the circuit board, make sure each LSI's orientation and position is correct. The ICs may become damaged if they are not mounted correctly when the power is turned on. Similarly, damage may also result if a short occurs, such as when a foreign object is positioned between pins in an IC, or between a pin and power supply or GND connection.

(5) Operation in strong electromagnetic field
When used within a strong electromagnetic field, evaluate carefully to avoid the risk of operation faults.

(6) When not using a sag compensation circuit
Connect the sag compensation pin and output pin as closely as possible. There is a danger of high frequency oscillation. Also make the distance from the output pin (OUT pin, SAG pin) to the 75Ω resistance as short as possible.

(7) When using a sag compensation circuit
Make the length of the output pin (OUT pin, SAG pin) and capacitor as short as possible. There is a danger of high frequency oscillation. Also make the distance from the output pin (OUT pin, SAG pin) to the 75Ω resistance as short as possible. If these cautions is not observed in board layout, connect a capacitor (0.01μF～0.1μF) as short as possible

(8) VGND1(31pin), VGND2(1pin) and AGND(9pin) connection
When to float any one of GND pins(VGND1, VGND2 and AGND) during operation, the internal ESD protection diode Between VGND1, VGND2 and AGND may be damaged by large current surge. If the abnormal design like floating any one of GND pins is required, it is advisable to connect external diodes between GND pins. The connection detail of external diodes is illustrated in Fig.7.

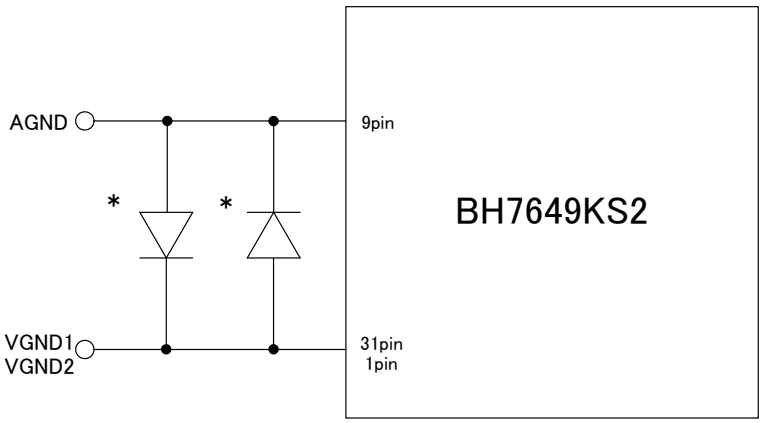

＊ :1SR154-400(ROHM） etc.

Fig.7 External diodes

© 2011 ROHM Co., Ltd. All rights reserved.

●Ordering part number

B	D	7	6	4	9	K	S	2		
Part No.		Part No.				Package KS2 : SQFP-T52			Packaging and forming specification None: Tray	

SQFP-T52

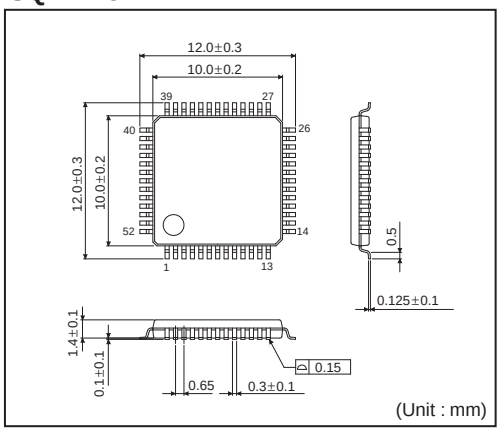

<Tape and Reel information>

Container	Tray (with dry pack)
Quantity	1000pcs
Direction of feed	Direction of product is fixed in a tray

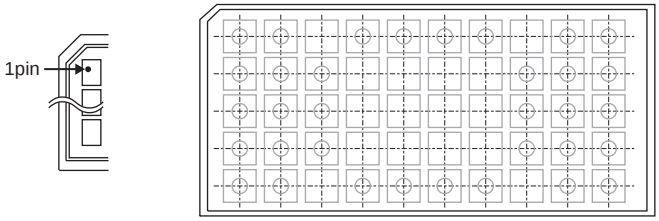

∗Order quantity needs to be multiple of the minimum quantity.

© 2011 ROHM Co., Ltd. All rights reserved.

Notes

No copying or reproduction of this document, in part or in whole, is permitted without the consent of ROHM Co.,Ltd.

The content specified herein is subject to change for improvement without notice.

The content specified herein is for the purpose of introducing ROHM's products (hereinafter "Products"). If you wish to use any such Product, please be sure to refer to the specifications, which can be obtained from ROHM upon request.

Examples of application circuits, circuit constants and any other information contained herein illustrate the standard usage and operations of the Products. The peripheral conditions must be taken into account when designing circuits for mass production.

Great care was taken in ensuring the accuracy of the information specified in this document. However, should you incur any damage arising from any inaccuracy or misprint of such information, ROHM shall bear no responsibility for such damage.

The technical information specified herein is intended only to show the typical functions of and examples of application circuits for the Products. ROHM does not grant you, explicitly or implicitly, any license to use or exercise intellectual property or other rights held by ROHM and other parties. ROHM shall bear no responsibility whatsoever for any dispute arising from the use of such technical information.

The Products specified in this document are intended to be used with general-use electronic equipment or devices (such as audio visual equipment, office-automation equipment, communication devices, electronic appliances and amusement devices).

The Products specified in this document are not designed to be radiation tolerant.

While ROHM always makes efforts to enhance the quality and reliability of its Products, a Product may fail or malfunction for a variety of reasons.

Please be sure to implement in your equipment using the Products safety measures to guard against the possibility of physical injury, fire or any other damage caused in the event of the failure of any Product, such as derating, redundancy, fire control and fail-safe designs. ROHM shall bear no responsibility whatsoever for your use of any Product outside of the prescribed scope or not in accordance with the instruction manual.

The Products are not designed or manufactured to be used with any equipment, device or system which requires an extremely high level of reliability the failure or malfunction of which may result in a direct threat to human life or create a risk of human injury (such as a medical instrument, transportation equipment, aerospace machinery, nuclear-reactor controller, fuel-controller or other safety device). ROHM shall bear no responsibility in any way for use of any of the Products for the above special purposes. If a Product is intended to be used for any such special purpose, please contact a ROHM sales representative before purchasing.

If you intend to export or ship overseas any Product or technology specified herein that may be controlled under the Foreign Exchange and the Foreign Trade Law, you will be required to obtain a license or permit under the Law.

ROHM SEMICONDUCTOR

Thank you for your accessing to ROHM product informations.
More detail product informations and catalogs are available, please contact us.

ROHM Customer Support System

http://www.rohm.com/contact/

© 2011 ROHM Co., Ltd. All rights reserved.

ООО «ЛайфЭлектроникс» “LifeElectronics” LLC

ИНН 7805602321 КПП 780501001 Р/С 40702810122510004610 ФАКБ "АБСОЛЮТ БАНК" (ЗАО) в г.Санкт-Петербурге К/С 30101810900000000703 БИК 044030703

Компания «Life Electronics» занимается поставками электронных компонентов импортного и отечественного производства от производителей и со складов крупных дистрибьюторов Европы, Америки и Азии.

С конца 2013 года компания активно расширяет линейку поставок компонентов по направлению коаксиальный кабель, кварцевые генераторы и конденсаторы (керамические, пленочные, электролитические), за счёт заключения дистрибьюторских договоров

Мы предлагаем:

- *Конкурентоспособные цены и скидки постоянным клиентам.*
- *Специальные условия для постоянных клиентов.*
- *Подбор аналогов.*
- *Поставку компонентов в любых объемах, удовлетворяющих вашим потребностям.*

- *Приемлемые сроки поставки, возможна ускоренная поставка.*
- *Доставку товара в любую точку России и стран СНГ.*
- *Комплексную поставку.*
- *Работу по проектам и поставку образцов.*
- *Формирование склада под заказчика.*

- *Сертификаты соответствия на поставляемую продукцию (по желанию клиента).*
- *Тестирование поставляемой продукции.*
- *Поставку компонентов, требующих военную и космическую приемку.*
- *Входной контроль качества.*
- *Наличие сертификата ISO.*

В составе нашей компании организован Конструкторский отдел, призванный помогать разработчикам, и инженерам.

Конструкторский отдел помогает осуществить:

- *Регистрацию проекта у производителя компонентов.*
- *Техническую поддержку проекта.*
- *Защиту от снятия компонента с производства.*
- *Оценку стоимости проекта по компонентам.*
- *Изготовление тестовой платы монтаж и пусконаладочные работы.*

Тел: +7 (812) 336 43 04 (многоканальный)
Email: org@lifeelectronics.ru

www.lifeelectronics.ru