CATALOG NO.	TERMINAL TYPE	IP20 FINGER SAFE COVERS		NO. OF POLES
		W/O INDICATION	INDICATION	
BCM603-1SQ	SCREW W/ QUICK CONNECT	CVR-CCM-QC SEE NOTES 7 & 9	CVRI-CCM-QC SEE NOTES 7 & 9	1
BCM603-2SQ	SCREW W/ QUICK CONNECT			2
BCM603-3SQ	SCREW W/ QUICK CONNECT			3
BCM603-1PQ	PRESSURE PLATE W/ QUICK CONNECT	CVR-CCM-QC SEE NOTES 7 & 9	CVRI-CCM-QC SEE NOTES 7 & 9	1
BCM603-2PQ	PRESSURE PLATE W/ QUICK CONNECT			2
BCM603-3PQ	PRESSURE PLATE W/ QUICK CONNECT			3
BCM603-1S	SCREW	CVR-CCM SEE NOTES 8 & 9	CVRI-CCM SEE NOTES 8 & 9	1
BCM603-2S	SCREW			2
BCM603-3S	SCREW			3
BCM603-1P	PRESSURE PLATE	CVR-CCM SEE NOTES 8 & 9	CVRI-CCM SEE NOTES 8 & 9	1
BCM603-2P	PRESSURE PLATE			2
BCM603-3P	PRESSURE PLATE			3
BCM603-1C	BOX LUG	CVR-CCM SEE NOTES 8 & 9	CVRI-CCM SEE NOTES 8 & 9	1
BCM603-2C	BOX LUG			2
BCM603-3C	BOX LUG			3

REVISIONS

REV	ZONE	DESCRIPTION	DATE	ECN	BY
A		PRE-RELEASE	5/8/14	BU-SB14TBD	AVM

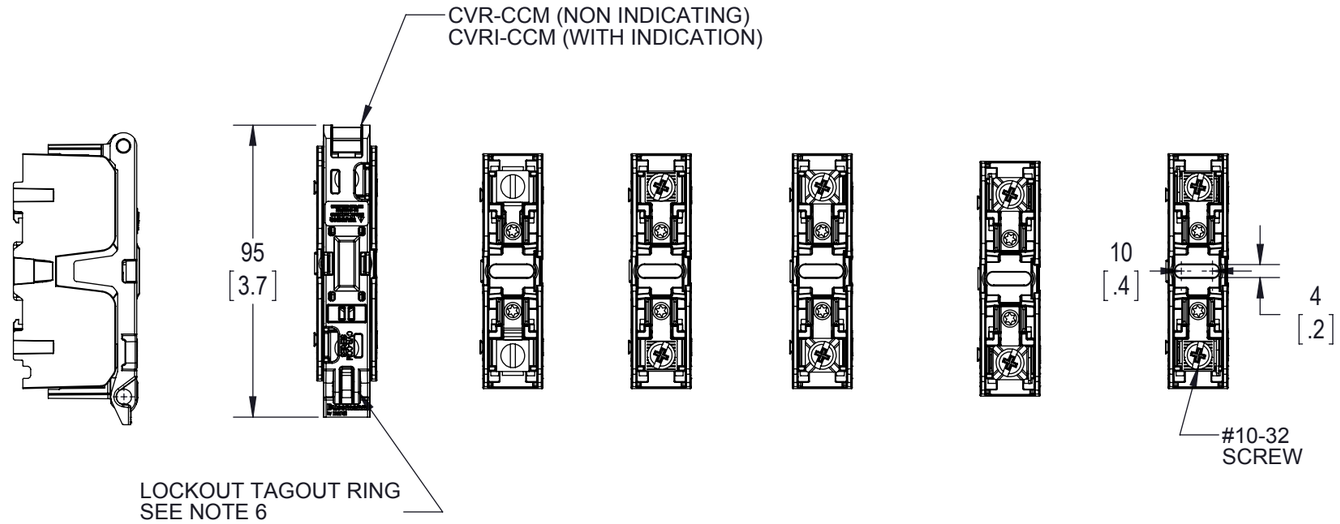

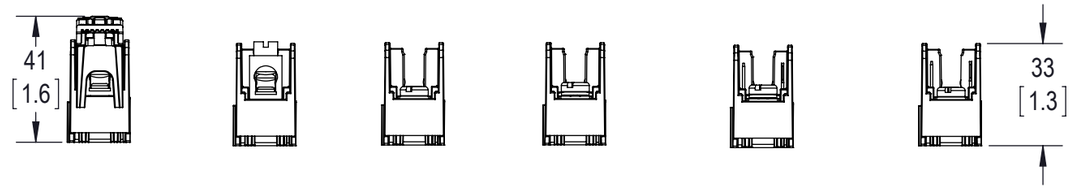

BCM603-1C WITH COVER | BCM603-1C | BCM603-1S | BCM603-1P | BCM603-1PQ | BCM603-1SQ

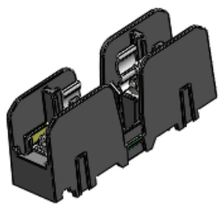

3D VIEW FOR BCM603-1S
SCALE NONE

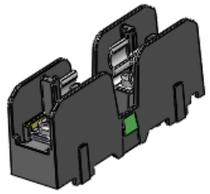

3D VIEW FOR BCM603-1P
SCALE NONE

NOTES:

1) VOLTAGE RATING: 600V
2) AMPERAGE: 30A (20A QUICK CONNECT)
3) WITHSTAND RATING: 200kA
4) -C: WIRE RANGE: (1) CU 75/90C
   2-3 AWG = 50 LB-IN (5.6NM)
   4-6 AWG = 45 LB-IN (5.1NM)
   8-14 AWG = 35 LB-IN (4.0 NM)
   (1) AL 75/90C
   2-6 AWG = 50 LB-IN (5.6NM)
   8 AWG = 40 LB-IN (4.5NM)
5) -S/P/SQ/PQ WIRE RANGE: (1) CU 75/90C
   10-18 AWG = 20 LB-IN (2.3NM)
6) USE 4MM DIA. CABLE LOCK
7) CVR-CCM-QC AND CVRI-CC-QC
   10AWG MAX WIRE + QUICK CONNECT OPENINGS AT ENDS AND TOP
8) CVR-CCM AND CVRI-CCM
   4AWG MAX WIRE + QUICK CONNECT OPENINGS AT TOP ONLY
   FITS WITH MOST RING AND FORK CONNECTORS
9) ALL COVERS FIT ON ALL BASES
10) RECOMMEND USING DIN-RAIL END STOPS FOR DIN RAIL MOUNTED APPLICATIONS
    BUSSMANN PART NUMBERS BRKT-ND OR BRKT-NDSCREW2
11) USE BUSSMANN MARKER LABEL TM26CB
12) ALL DIMENSIONS ARE TYPICAL UNLESS OTHERWISE INDICATED

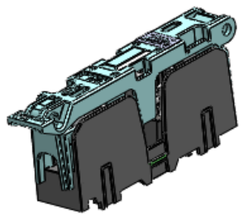

3D VIEW FOR BCM603-1C
WITH COVER CVRI-CCM
SCALE NONE

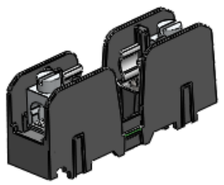

3D VIEW FOR BCM603-1C
SCALE NONE

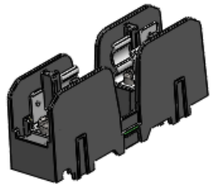

3D VIEW FOR BCM603-1SQ
SCALE NONE

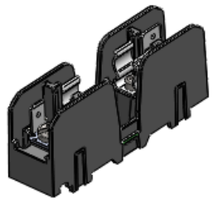

3D VIEW FOR BCM603-1PQ
SCALE NONE

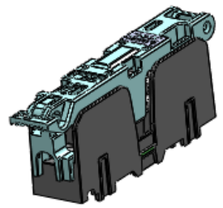

3D VIEW FOR BCM603-1xQ
WITH COVER CVRI-CCM-QC
SCALE NONE

CUSTOMER PRINT

MODEL SOURCE DATA	MODEL VERSION
BMM603-XPQ	

THIS DRAWING IS AN UNCONTROLLED COPY IF PRINTED OR SENT ELECTRONICALLY. DO NOT SCALE DRAWING

EATON CORPORATION - CONFIDENTIAL AND PROPRIETARY
NOTICE TO PERSONS RECEIVING THIS DOCUMENT AND/OR TECHNICAL INFORMATION:

THIS DOCUMENT, INCLUDING THE DRAWING AND INFORMATION CONTIANED THEREON, IS CONFIDENTIAL AND IS THE EXCLUSIVE PROPERTY OF EATON CORPORATION AND IS MERELY ON LOAN AND SUBJECT TO RECALL BY EATON AT ANY TIME. BY TAKING POSSESSION OF THE DOCUMENT, THE RECIPIENT ACKNOWLEDGES AND AGREES THAT THIS DOCUMENT CANNOT BE USED IN ANY MANNER ADVERSE TO THE INTERESTS OF EATON AND THAT NO PORTION OF THIS DOCUMENT MAY BE COPIED OR OTHERWISE REPRODUCED WITHOUT THE PRIOR WRITTEN CONSENT OF EATON. IN THE CASE OF CONFLICTING CONTRACTUAL PROVISIONS, THIS NOTICE SHALL GOVERN THE STATUS OF THIS DOCUMENT.

© 2012 Eaton Corporation. All Rights Reserved.

GENERAL DRAWING PRACTICES IN ACCORDANCE WITH **ASME - Y14.100-2004**
DIMENSIONS AND TOLERANCES IN ACCORDANCE WITH **ASME - Y14.5M-1994**

UNLESS OTHERWISE SPECIFIED DIMENSIONS ARE IN MILLIMETERS TOLERANCES TO BE
ONE PLACE X.X = ±0.3 mm
TWO PLACE X.X X = ±0.13 mm
ALL ANGLES X.X = ± 1°

SPECIAL CHARACTERISTIC ◇ (0)
SIGNIFICANT CHARACTERISTIC △ (0)

THIRD ANGLE PROJECTION

APPROVALS	DATE
PRODUCT MANAGER D. McDowell	5/08/2014
ENGINEER A.VZM	5/08/2014
QUALITY ---	--/--/----
MATERIAL N/A	
FINISH N/A	

Bussmann by EATON

TITLE 600V / 30A 10X38 CC FUSE BLOCK

SIZE A3 | DWG NO. BCM603-SERIES-CP | REV A

SCALE: 1:2 | SHEET 1 OF 3

SLA3_BUSS_NAE_GENRL_REV_A

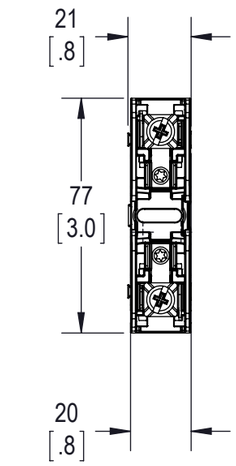

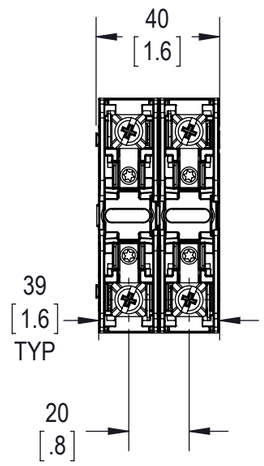

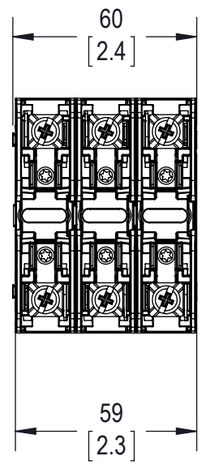

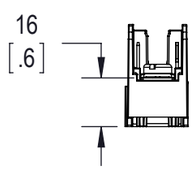

1 POLE
BCM603-1PQ SHOWN

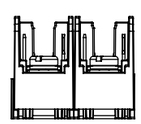

2 POLE
BCM603-2PQ SHOWN

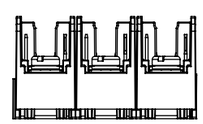

3 POLE
BCM603-3PQ SHOWN

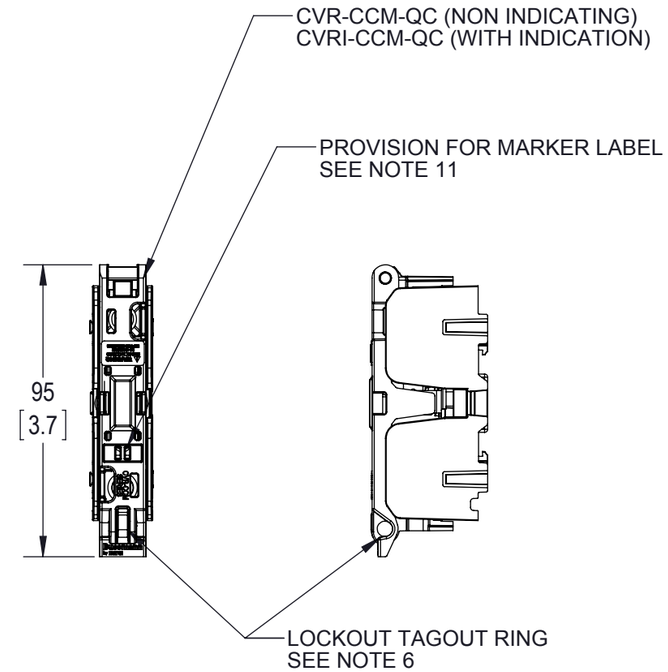

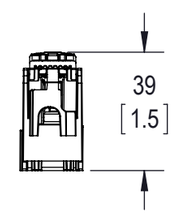

BCM60C-1xQ
SHOWN WITH COVER

CUSTOMER PRINT

Bussmann by EATON

TITLE
600V / 30A 10X38 CC FUSE BLOCK

SIZE	DWG NO.	REV
A3	BCM603-SERIES-CP	A
SCALE: 1:2		SHEET 2 OF 3

SLA3_BUSS_NAE_GENRL_REV_A

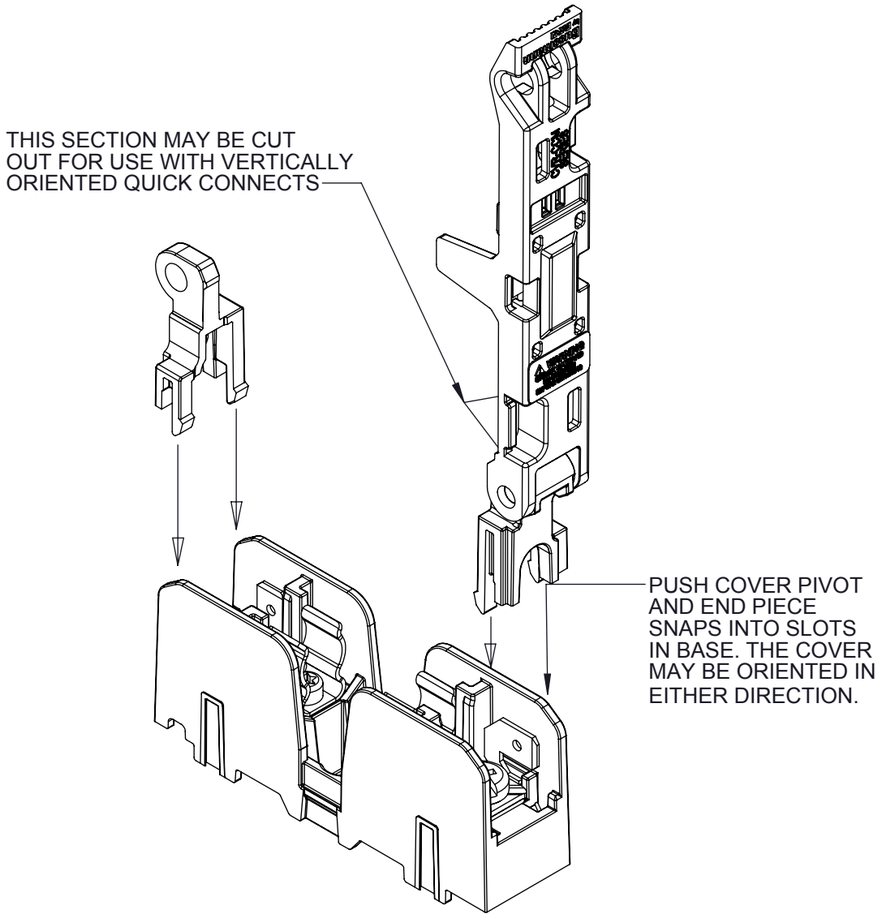

COVER INSTALLATION
ONCE INSTALLED THE COVER CANNOT BE REMOVED

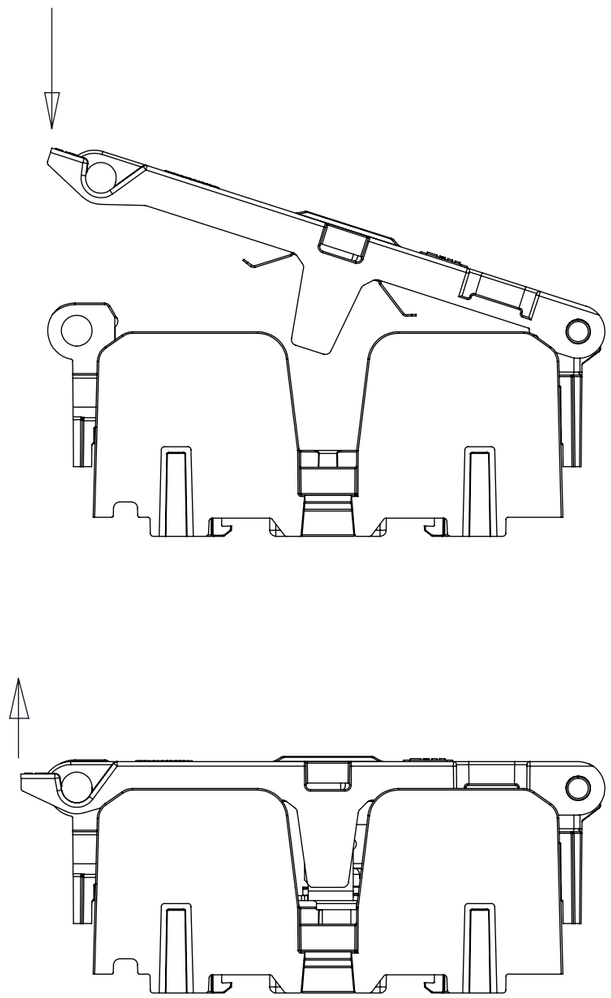

OPENING AND CLOSING
PUSH/PULL ON END TAB, ROTATE UNTIL CLOSED/OPEN

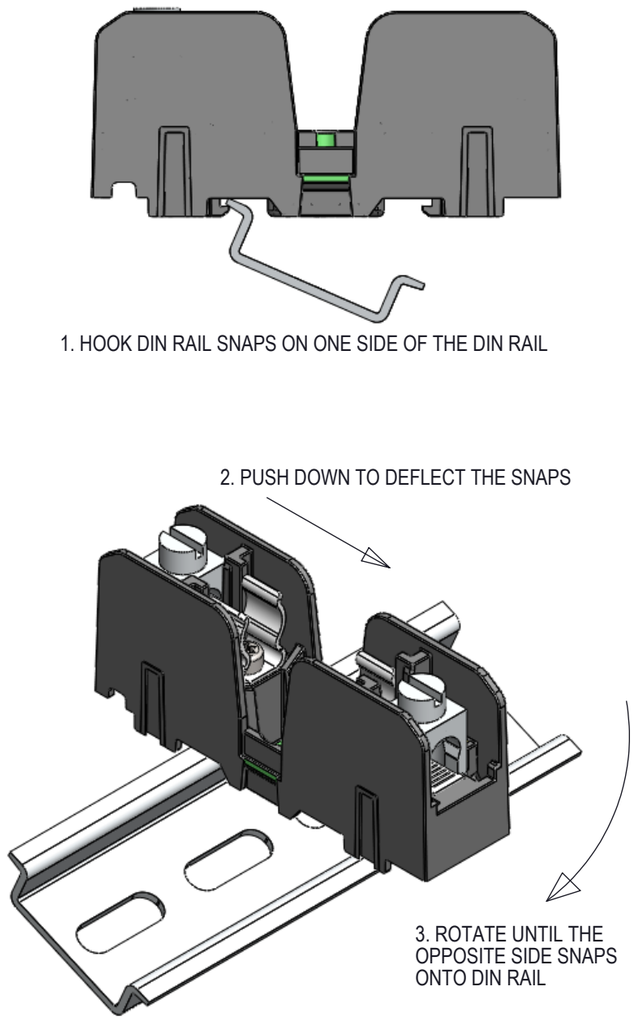

INSTALLATION ON DIN RAIL
END STOPS MAY BE NECESSARY FOR SOME ASSEMBLY CONDITIONS - SEE NOTE 10

CUSTOMER PRINT

Bussmann by EATON

TITLE		
600V / 30A 10X38 CC FUSE BLOCK		
SIZE A3	DWG NO. BCM603-SERIES-CP	REV A
SCALE: 1:2		SHEET 3 OF 3

SLA3_BUSS_NAE_GENRL_REV_A

ООО «ЛайфЭлектроникс» “LifeElectronics” LLC

ИНН 7805602321 КПП 780501001 Р/С 40702810122510004610 ФАКБ "АБСОЛЮТ БАНК" (ЗАО) в г.Санкт-Петербурге К/С 30101810900000000703 БИК 044030703

Компания «Life Electronics» занимается поставками электронных компонентов импортного и отечественного производства от производителей и со складов крупных дистрибьюторов Европы, Америки и Азии.

С конца 2013 года компания активно расширяет линейку поставок компонентов по направлению коаксиальный кабель, кварцевые генераторы и конденсаторы (керамические, пленочные, электролитические), за счёт заключения дистрибьюторских договоров

Мы предлагаем:

- *Конкурентоспособные цены и скидки постоянным клиентам.*
- *Специальные условия для постоянных клиентов.*
- *Подбор аналогов.*
- *Поставку компонентов в любых объемах, удовлетворяющих вашим потребностям.*

- *Приемлемые сроки поставки, возможна ускоренная поставка.*
- *Доставку товара в любую точку России и стран СНГ.*
- *Комплексную поставку.*
- *Работу по проектам и поставку образцов.*
- *Формирование склада под заказчика.*

- *Сертификаты соответствия на поставляемую продукцию (по желанию клиента).*
- *Тестирование поставляемой продукции.*
- *Поставку компонентов, требующих военную и космическую приемку.*
- *Входной контроль качества.*
- *Наличие сертификата ISO.*

В составе нашей компании организован Конструкторский отдел, призванный помогать разработчикам, и инженерам.

Конструкторский отдел помогает осуществить:

- *Регистрацию проекта у производителя компонентов.*
- *Техническую поддержку проекта.*
- *Защиту от снятия компонента с производства.*
- *Оценку стоимости проекта по компонентам.*
- *Изготовление тестовой платы монтаж и пусконаладочные работы.*

Тел: +7 (812) 336 43 04 (многоканальный)
Email: org@lifeelectronics.ru

www.lifeelectronics.ru