LTM8020
36V, 200mA DC/DC µModule Regulator

DESCRIPTION

Demonstration circuit DC1194A features the LTM®8020, a 200mA DC/DC step-down µModule® regulator. The board is preset to deliver a 3.3V output at up to 200mA load current from an input voltage of up to 36V. The output voltage may be modified by simply changing one resistor. The LTM8020 data sheet must be read in conjunction with this demo manual prior to working on or modifying demo circuit DC1194A.

Design files for this circuit board are available at http://www.linear.com/demo

LT, LTC, LTM, µModule, Linear Technology and the Linear logo are registered trademarks of Linear Technology Corporation. All other trademarks are the property of their respective owners.

PERFORMANCE SUMMARY

PARAMETER	CONDITIONS / NOTES	VALUE
Input Voltage Range	V_{OUT} = 3.3V, Device Operating	4.5V to 36V
Output Voltage, V_{OUT}	R1 = 30.1k	3.3V
Maximum Output Current		200mA
Efficiency	V_{IN} = 5V, V_{OUT} = 3.3V, I_{OUT} = 100mA	85% (See Figure 2)
Light Load Power Loss	V_{IN} = 12V, V_{OUT} = 3.3V, I_{OUT} = 100µA	400µW

BOARD PHOTO

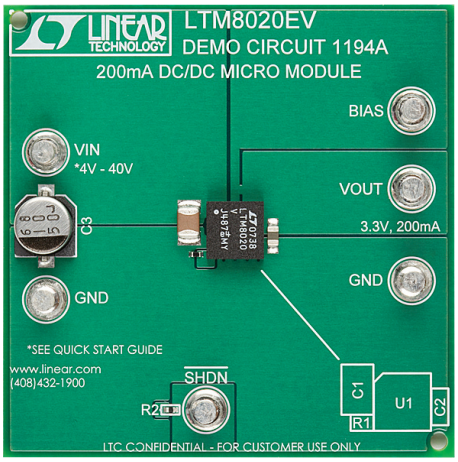

DESCRIPTION

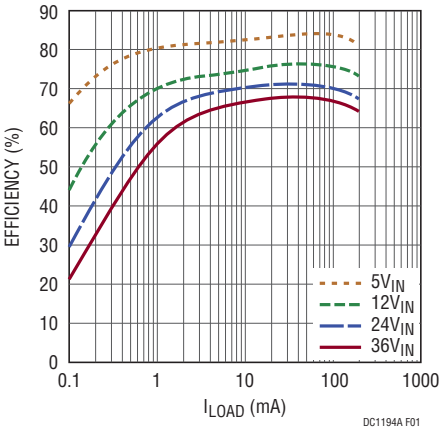

Figure 1. LTM8020EV Efficiency 3.3V_{OUT}

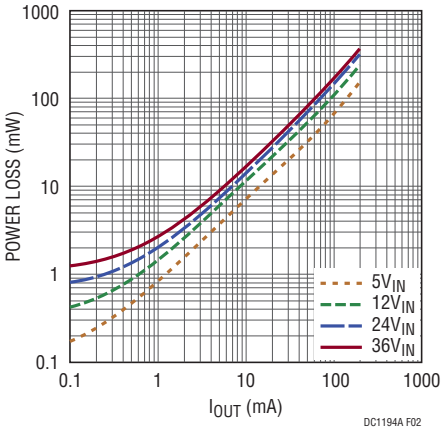

Figure 2. LTM8020EV Power Loss 3.3V_{OUT}

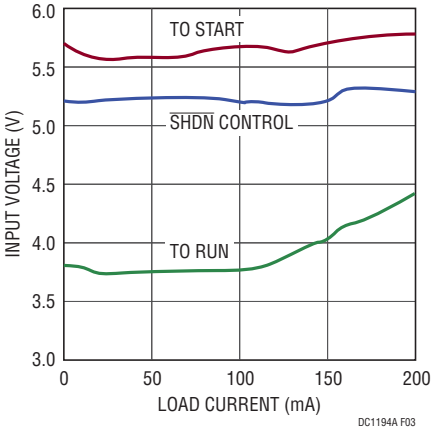

Figure 3. LTM8020EV Typical Minimum V_{IN} 3.3V_{OUT}

QUICK START PROCEDURE

Demonstration circuit 1194A is easy to set up to evaluate the performance of the LTM8020. Refer to Figure 4 for proper measurement equipment setup and follow the procedure below:

NOTE: Do not hot-plug the V_{IN} terminal at high input voltage. The absolute maximum voltage on V_{IN} is 40V and hot-plugging a power supply through wire leads to the demonstration circuit can cause the voltage on the extremely low ESR ceramic input capacitor to ring to twice its DC value. In order to protect the IC, a higher ESR aluminum electrolytic capacitor is placed at the input terminals. This may protect against some, but not all, input transients due to hot-plugging with a power supply. See Application Note 88 for more details.

1. Connect the power supply (with power off), load, and meters as shown in Figure 4.
2. After all connections are made, turn on input power and verify that the output voltage is 3.3V.

   NOTE: If the output voltage is too low, temporarily disconnect the load to make sure that the load is not set too high.
3. Once the proper output voltage is established, adjust the load within the operating range and observe the output voltage regulation, ripple voltage, efficiency and other parameters.

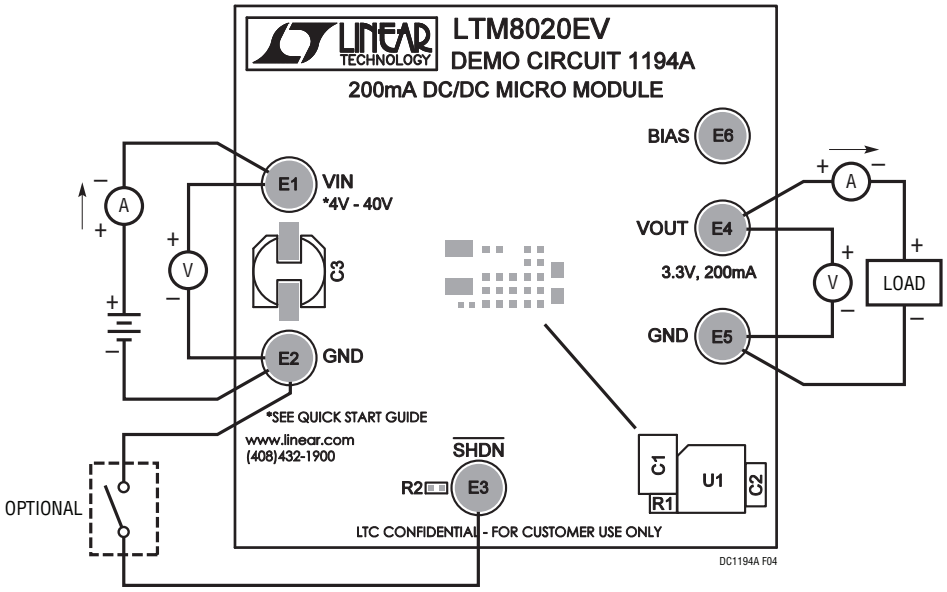

Figure 4. Proper Measurement Equipment Setup

PARTS LIST

ITEM	QTY	REFERENCE	PART DESCRIPTION	MANUFACTURER'S PART NUMBER
Required Circuit Components				
1	1	C1	CAP, 1210 2.2µF 10% 50V X7R	TDK C3225X7R1H225K
5	1	R1	RES, 0402 301k 1% 1/16W	VISHAY CRCW0402301KFKED
6	1	R2	RES, 0402 100k 5% 1/16W	VISHAY CRCW0402100KJNED
7	1	U1	IC, MODULE	LINEAR TECH. LTM8020EV#PBF
Optional Electrical Components				
2	1	C2	CAP, 0805 22µF 20% 6.3V X7R	TAIYO YUDEN JDK212BJ226MD-T
3	1	C3	CAP, 10µF 20% 50V ALUM	SANYO 50CE10BJ (Now SUNCON 50CE10BJ)
Hardware				
4	6	E1, E2, E3, E4, E5, E6	TURRET	MILL-MAX 2501-2-00-80-00-00-07-0

SCHEMATIC DIAGRAM

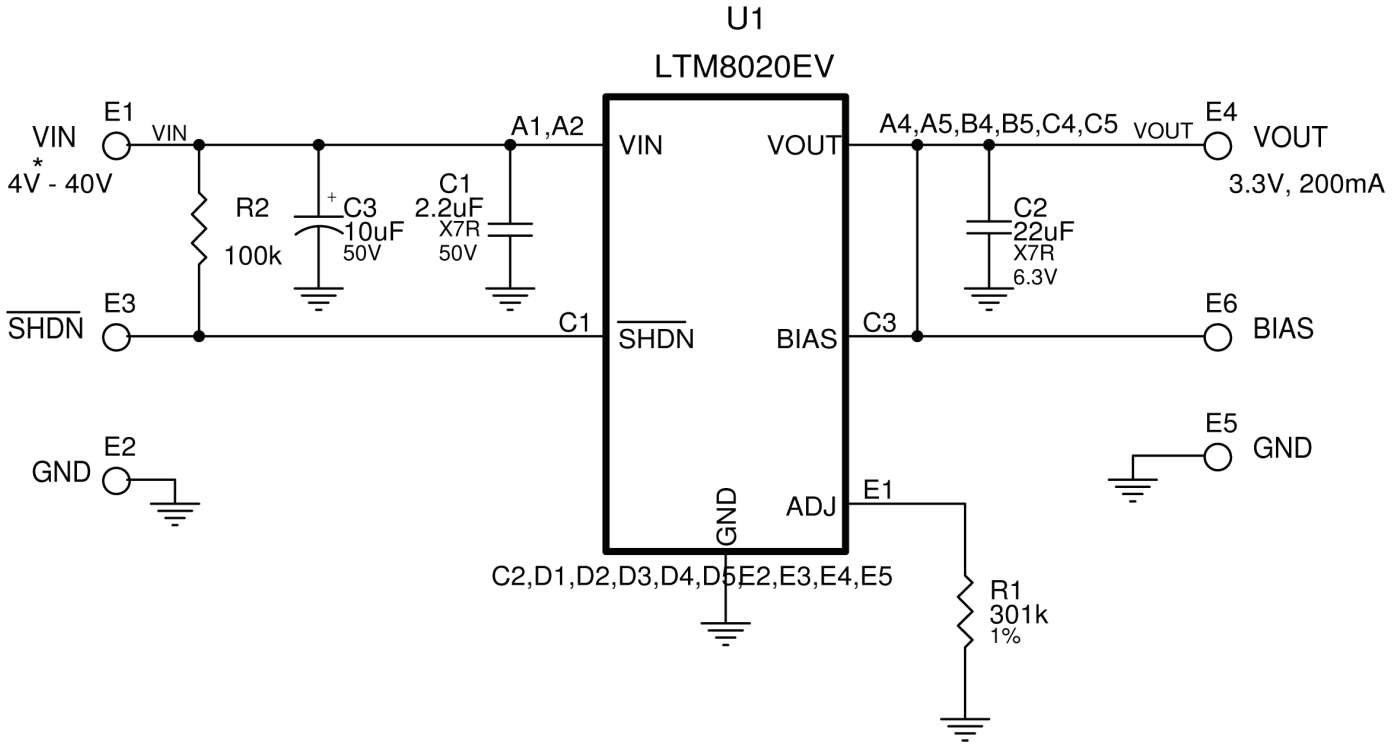

Information furnished by Linear Technology Corporation is believed to be accurate and reliable. However, no responsibility is assumed for its use. Linear Technology Corporation makes no representation that the interconnection of its circuits as described herein will not infringe on existing patent rights.

DEMONSTRATION BOARD IMPORTANT NOTICE

Linear Technology Corporation (LTC) provides the enclosed product(s) under the following **AS IS** conditions:

This demonstration board (DEMO BOARD) kit being sold or provided by Linear Technology is intended for use for **ENGINEERING DEVELOPMENT OR EVALUATION PURPOSES ONLY** and is not provided by LTC for commercial use. As such, the DEMO BOARD herein may not be complete in terms of required design-, marketing-, and/or manufacturing-related protective considerations, including but not limited to product safety measures typically found in finished commercial goods. As a prototype, this product does not fall within the scope of the European Union directive on electromagnetic compatibility and therefore may or may not meet the technical requirements of the directive, or other regulations.

If this evaluation kit does not meet the specifications recited in the DEMO BOARD manual the kit may be returned within 30 days from the date of delivery for a full refund. THE FOREGOING WARRANTY IS THE EXCLUSIVE WARRANTY MADE BY THE SELLER TO BUYER AND IS IN LIEU OF ALL OTHER WARRANTIES, EXPRESSED, IMPLIED, OR STATUTORY, INCLUDING ANY WARRANTY OF MERCHANTABILITY OR FITNESS FOR ANY PARTICULAR PURPOSE. EXCEPT TO THE EXTENT OF THIS INDEMNITY, NEITHER PARTY SHALL BE LIABLE TO THE OTHER FOR ANY INDIRECT, SPECIAL, INCIDENTAL, OR CONSEQUENTIAL DAMAGES.

The user assumes all responsibility and liability for proper and safe handling of the goods. Further, the user releases LTC from all claims arising from the handling or use of the goods. Due to the open construction of the product, it is the user's responsibility to take any and all appropriate precautions with regard to electrostatic discharge. Also be aware that the products herein may not be regulatory compliant or agency certified (FCC, UL, CE, etc.).

No License is granted under any patent right or other intellectual property whatsoever. **LTC assumes no liability for applications assistance, customer product design, software performance, or infringement of patents or any other intellectual property rights of any kind.**

LTC currently services a variety of customers for products around the world, and therefore this transaction **is not exclusive**.

Please read the DEMO BOARD manual prior to handling the product. Persons handling this product must have electronics training and observe good laboratory practice standards. **Common sense is encouraged**.

This notice contains important safety information about temperatures and voltages. For further safety concerns, please contact a LTC application engineer.

Mailing Address:

Linear Technology

1630 McCarthy Blvd.

Milpitas, CA 95035

Copyright © 2004, Linear Technology Corporation

Linear Technology Corporation
1630 McCarthy Blvd., Milpitas, CA 95035-7417
(408) 432-1900 • FAX: (408) 434-0507 • www.linear.com

LT 0311 • PRINTED IN USA

© LINEAR TECHNOLOGY CORPORATION 2011

ООО «ЛайфЭлектроникс» “LifeElectronics” LLC

ИНН 7805602321 КПП 780501001 Р/С 40702810122510004610 ФАКБ "АБСОЛЮТ БАНК" (ЗАО) в г.Санкт-Петербурге К/С 30101810900000000703 БИК 044030703

Компания «Life Electronics» занимается поставками электронных компонентов импортного и отечественного производства от производителей и со складов крупных дистрибьюторов Европы, Америки и Азии.

С конца 2013 года компания активно расширяет линейку поставок компонентов по направлению коаксиальный кабель, кварцевые генераторы и конденсаторы (керамические, пленочные, электролитические), за счёт заключения дистрибьюторских договоров

Мы предлагаем:

- *Конкурентоспособные цены и скидки постоянным клиентам.*
- *Специальные условия для постоянных клиентов.*
- *Подбор аналогов.*
- *Поставку компонентов в любых объемах, удовлетворяющих вашим потребностям.*

- *Приемлемые сроки поставки, возможна ускоренная поставка.*
- *Доставку товара в любую точку России и стран СНГ.*
- *Комплексную поставку.*
- *Работу по проектам и поставку образцов.*
- *Формирование склада под заказчика.*

- *Сертификаты соответствия на поставляемую продукцию (по желанию клиента).*
- *Тестирование поставляемой продукции.*
- *Поставку компонентов, требующих военную и космическую приемку.*
- *Входной контроль качества.*
- *Наличие сертификата ISO.*

В составе нашей компании организован Конструкторский отдел, призванный помогать разработчикам, и инженерам.

Конструкторский отдел помогает осуществить:

- *Регистрацию проекта у производителя компонентов.*
- *Техническую поддержку проекта.*
- *Защиту от снятия компонента с производства.*
- *Оценку стоимости проекта по компонентам.*
- *Изготовление тестовой платы монтаж и пусконаладочные работы.*

Тел: +7 (812) 336 43 04 (многоканальный)
Email: org@lifeelectronics.ru

www.lifeelectronics.ru