PRODUCT NUMBER
SEE TABLE

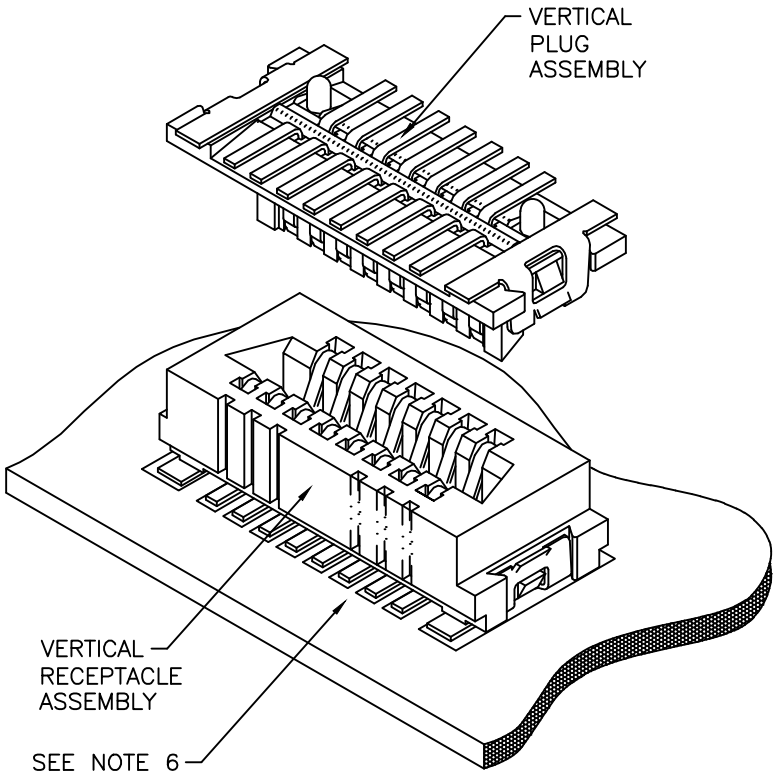

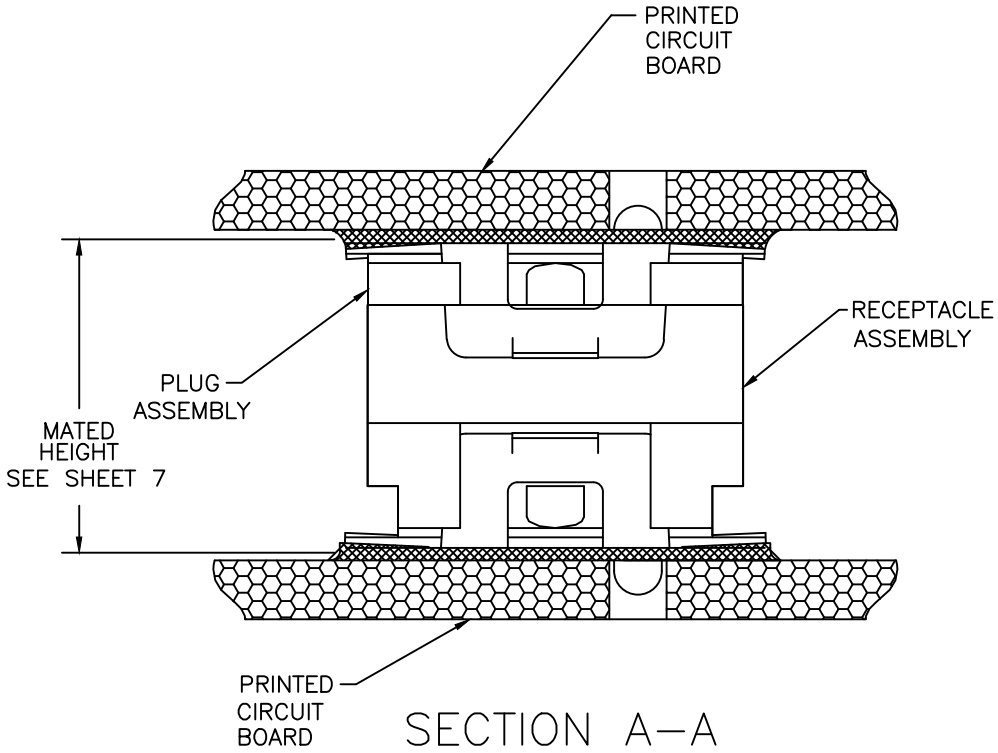

SECTION A–A
ROTATED 90°
N.T.S.

mat'l. code				surface ISO 1302	tolerance ISO 406 ISO 1101	projection	product family CONAN®
ltr	ecn no	dr	date	tolerances unless otherwise specified			title
A	N11–0214	J.Z	2011–07–20	angles	linear .XX±.01/.X±0.3	INCH/MM	CONAN® CONNECTOR ASSEMBLY
B	ELX–N–05460	J.Z	2011–08–23		.XXX±.005/.XX±0.13		
C	ELX–N–14210	GM	2013–03–07	0°±2°	.XXXX±.0020/.XXX±0.051	scale 5:1	
–	–	–	–	dr	J.ZHOU	2011–07–20	dwg no 10118744 sheet 1 of 7 size A3
–	–	–	–	engr	J.ZHOU	2011–07–20	
–	–	–	–	chr	J.ZHOU	2011–07–20	
–	–	–	–	appd	R.BIAN	2011–07–20	type Product Customer Drawing

sheet index	revision	C	C	C	C	C	C	C
	sheet	1	2	3	4	5	6	7

FCIconnect.com
Copyright FCI

PRODUCT NUMBER
SEE TABLE

RECEPTACLE

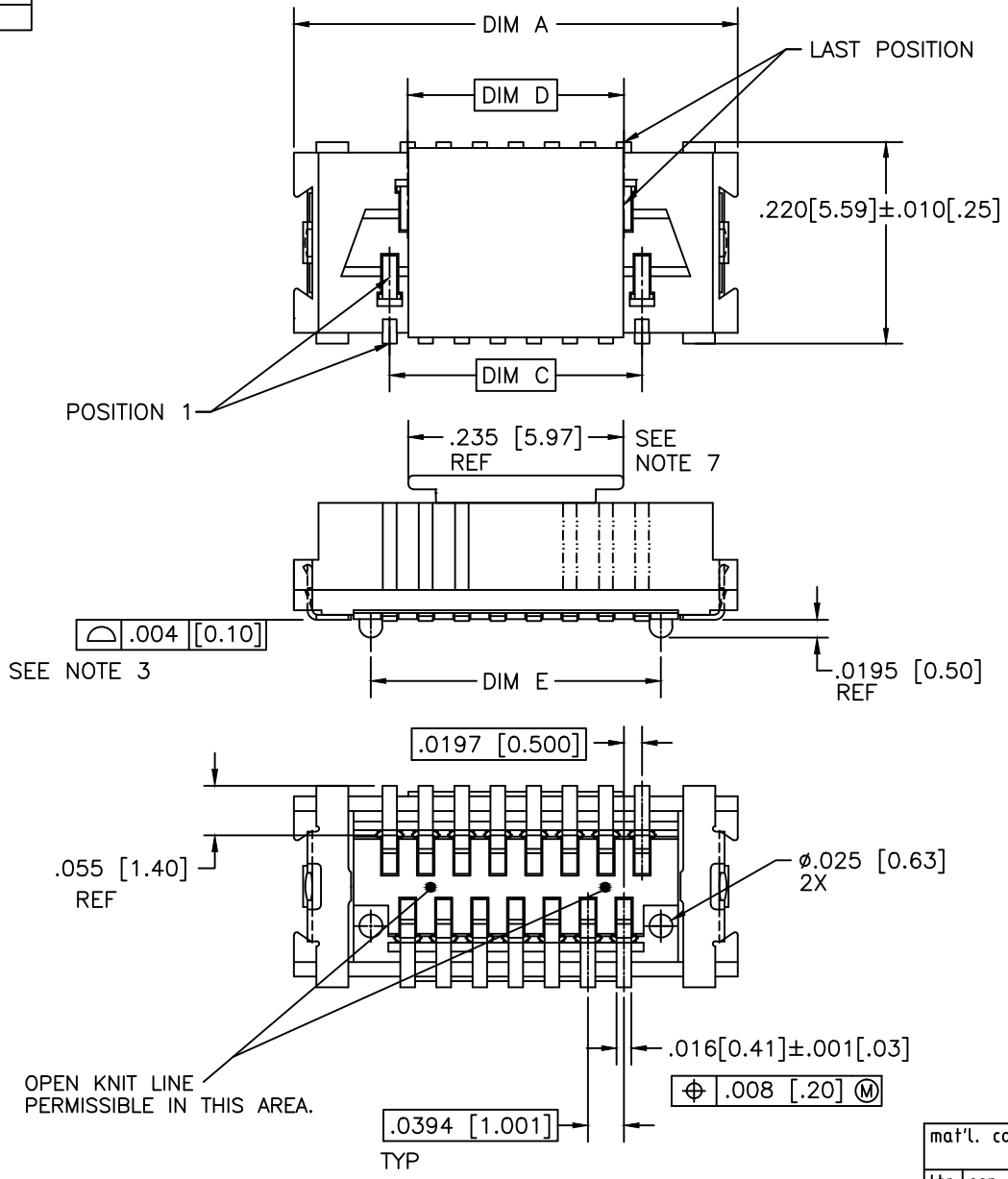

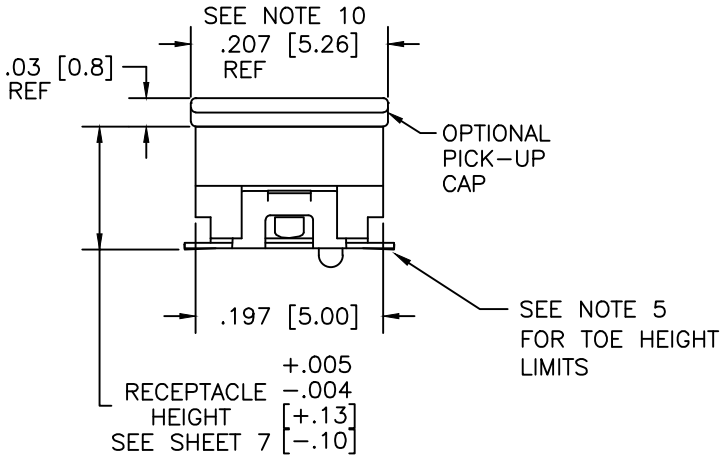

mat'l. code				surface ISO 1302	tolerance ISO 406 ISO 1101	projection	product family CONAN®
ltr	ecn no	dr	date	tolerances unless otherwise specified			title
C				angles	linear: .XX±.01/.X±0.3; .XXX±.005/.XX±0.13; .XXXX±.0020/.XXX±0.051	INCH/MM	CONAN® CONNECTOR ASSEMBLY
				0°±2°		scale 5:1	
				dr	J.ZHOU	2011-07-20	dwg no 10118744 — sheet 2 of 7 — size A3
				engr	J.ZHOU	2011-07-20	
				chr	J.ZHOU	2011-07-20	
				appd	R.BIAN	2011-07-20	type Product Customer Drawing
sheet index	revision sheet						

FCIconnect.com
Copyright FCI

PRODUCT NUMBER
SEE TABLE

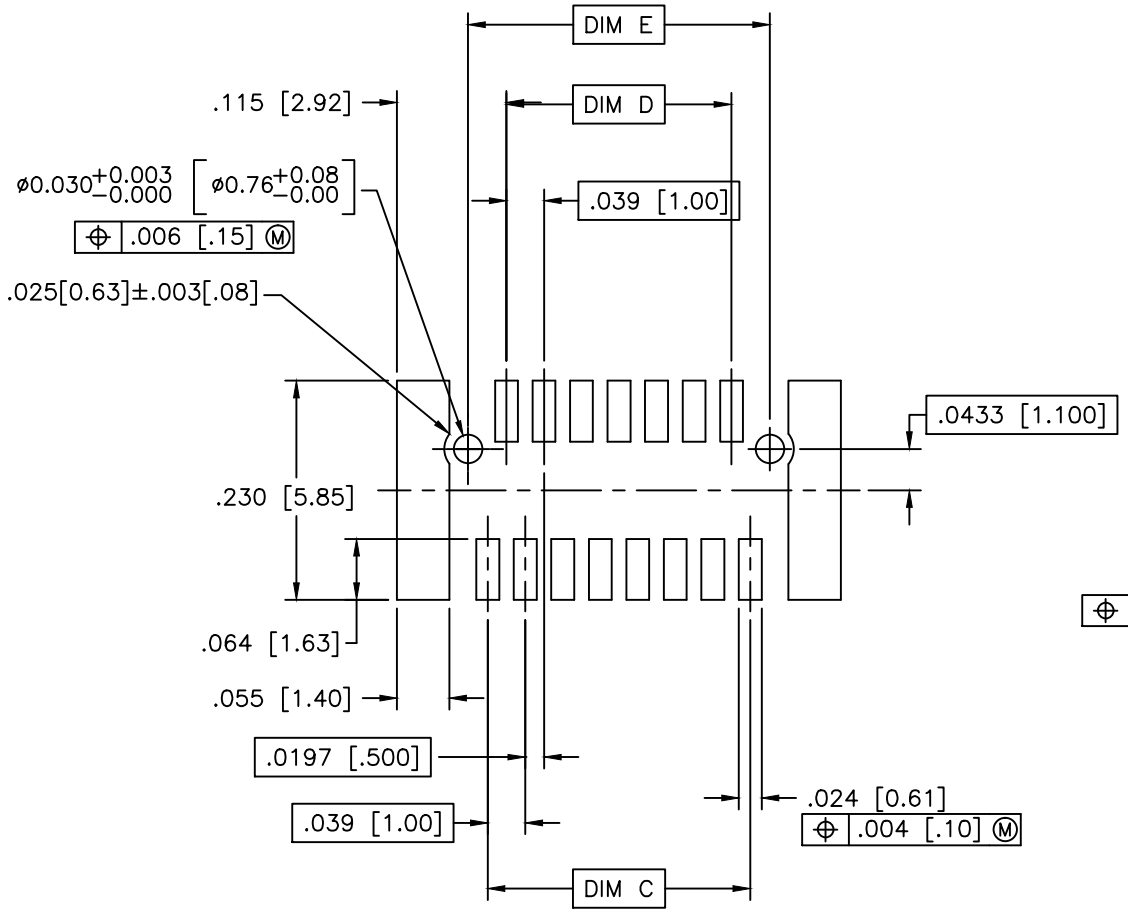

RECOMMENDED PAD LAYOUT FOR RECEPTACLE

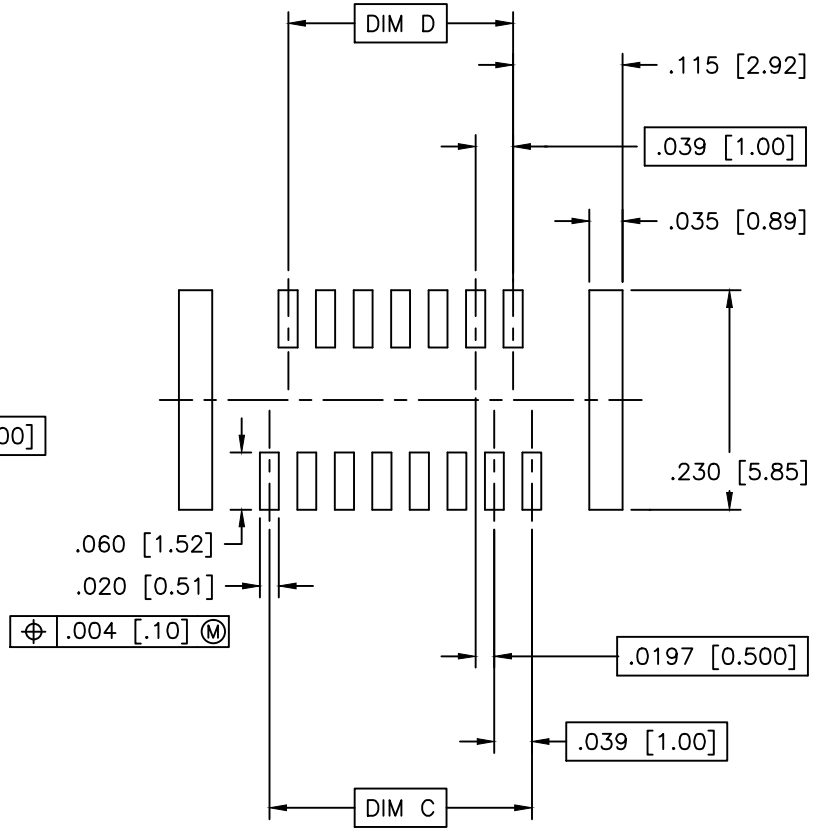

RECOMMENDED STENCIL LAYOUT FOR RECEPTACLE

mat'l. code				surface ISO 1302	tolerance ISO 406 ISO 1101	projection	product family CONAN®
ltr	ecn no	dr	date	tolerances unless otherwise specified			title
C				angles	linear: .XX±.01/.X±0.3; .XXX±.005/.XX±0.13; .XXXX±.0020/.XXX±0.051	INCH/MM	CONAN® CONNECTOR ASSEMBLY
				0°±2°		scale 5:1	
				dr	J.ZHOU	2011-07-20	dwg no 10118744 — sheet 3 of 7 — size A3
				engr	J.ZHOU	2011-07-20	
				chr	J.ZHOU	2011-07-20	
				appd	R.BIAN	2011-07-20	type Product Customer Drawing
sheet index	revision sheet						

Copyright FCI

FCIconnect.com

form: A3

PDS: Rev :C STATUS:Released Printed: Mar 08, 2013

PRODUCT NUMBER
SEE TABLE

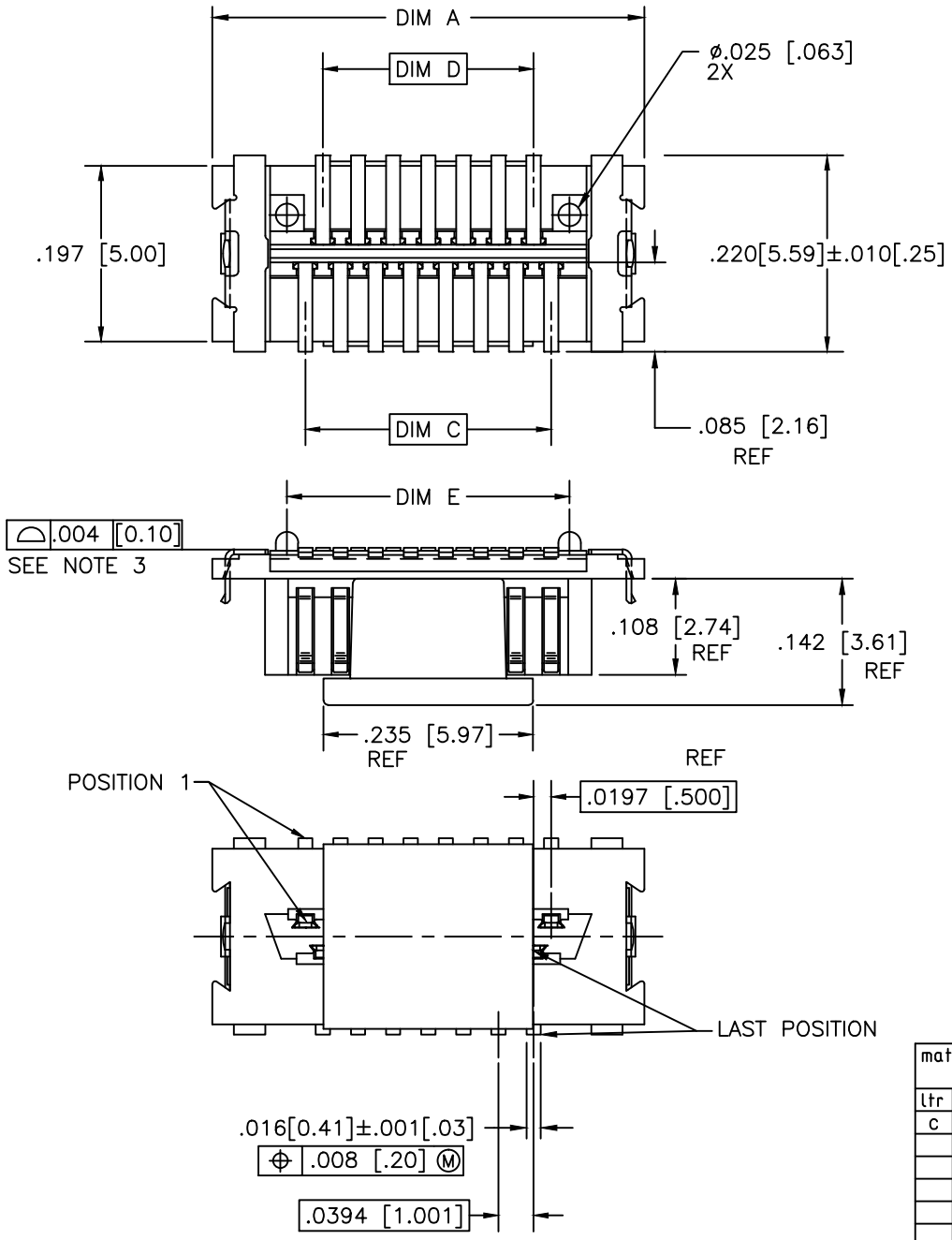

PLUG

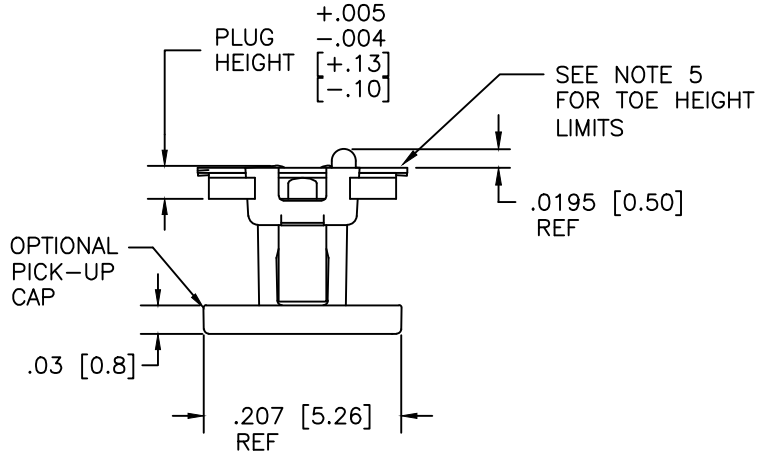

mat'l. code				surface ISO 1302 ✓	tolerance ISO 406 ISO 1101	projection	product family CONAN®
ltr	ecn no	dr	date	tolerances unless otherwise specified			title
C				angles	linear .XX±.01/.X±0.3	INCH/MM	CONAN® CONNECTOR ASSEMBLY
					.XXX±.005/.XX±0.13		
				0°±2°	.XXXX±.0020/.XXX±0.051	scale 5:1	
				dr	J.ZHOU	2011-07-20	dwg no 10118744 — sheet 4 of 7 — size A3
				engr	J.ZHOU	2011-07-20	
				chr	J.ZHOU	2011-07-20	
				appd	R.BIAN	2011-07-20	type Product Customer Drawing
sheet index	revision sheet						

FCIconnect.com
Copyright FCI

PRODUCT NUMBER
SEE TABLE

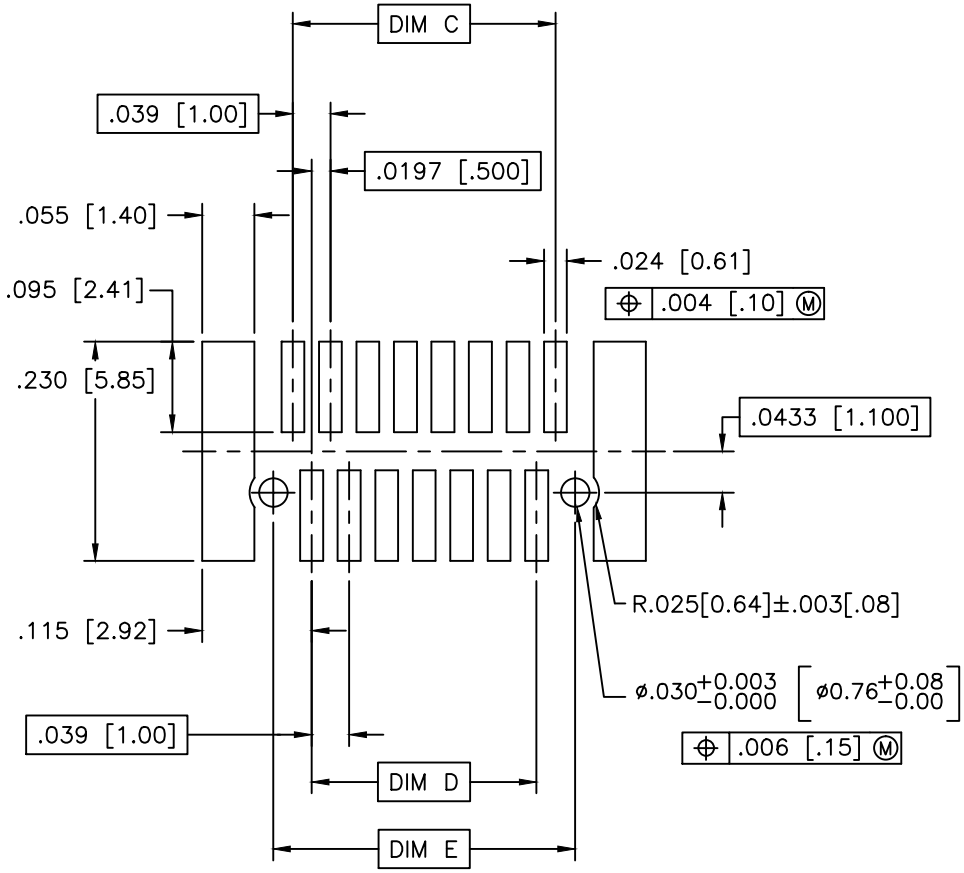

RECOMMENDED
PAD LAYOUT
FOR PLUG

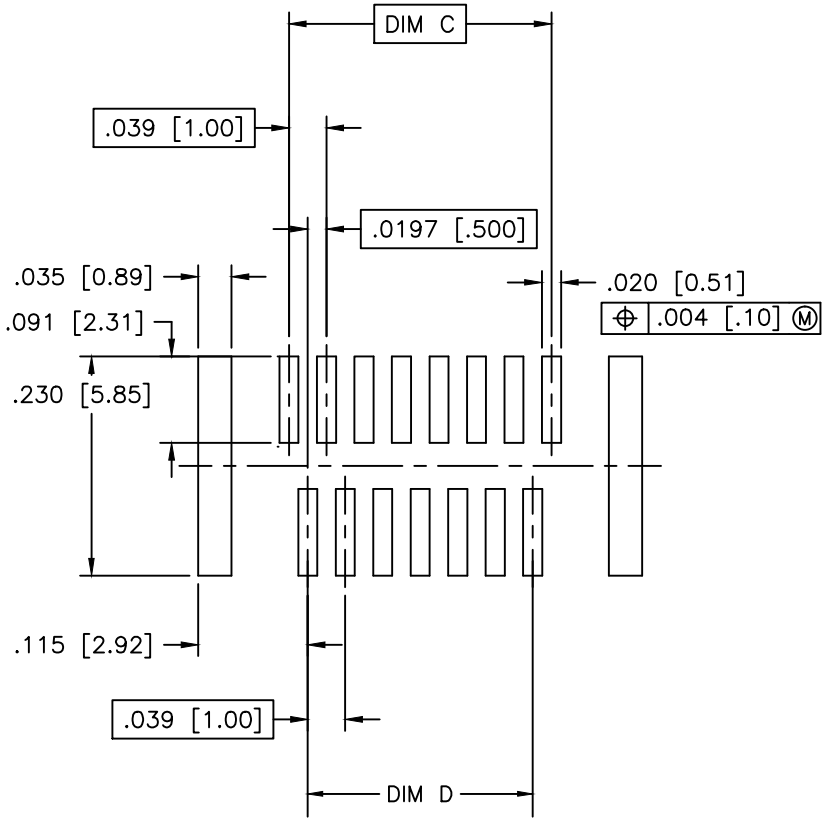

RECOMMENDED
STENCIL LAYOUT
FOR PLUG

mat'l. code				surface ISO 1302	tolerance ISO 406 ISO 1101	projection	product family CONAN®	
ltr	ecn no	dr	date	tolerances unless otherwise specified			title	
C				angles	linear .XX±.01/.X±0.3	INCH/MM	CONAN® CONNECTOR ASSEMBLY	
					.XXX±.005/.XX±0.13			
				0°±2°	.XXXX±.0020/.XXX±0.051	scale 5:1		
				dr	J.ZHOU	2011-07-20	dwg no 10118744	sheet 5 of 7 size A3
				engr	J.ZHOU	2011-07-20		
				chr	J.ZHOU	2011-07-20		
				appd	R.BIAN	2011-07-20	type Product Customer Drawing	
sheet index	revision sheet							

Copyright FCI
FCIconnect.com

PRODUCT NUMBER	POS	DIM "A"	DIM "C"	DIM "D"	DIM "E"
10118744-TCWXY09LF	9	.366 [9.30]	.157 [4.00]	.118 [3.00]	.1990 [5.055]
-TCWXY11LF	11	.406 [10.30]	.197 [5.00]	.157 [4.00]	.2380 [6.045]
-TCWXY15LF	15	.484 [12.30]	.276 [7.00]	.236 [6.00]	.3170 [8.052]
-TCWXY21LF	21	.602 [15.30]	.394 [10.00]	.354 [9.00]	.4350 [11.049]
-TCWXY25LF	25	.681 [17.30]	.472 [12.00]	.433 [11.00]	.5140 [13.056]
-TCWXY31LF	31	.800 [20.30]	.591 [15.00]	.551 [14.00]	.6320 [16.053]
-TCWXY41LF	41	.996 [25.30]	.787 [20.00]	.748 [19.00]	.8290 [21.057]
-TCWXY51LF	51	1.193 [30.30]	.984 [25.00]	.945 [24.00]	1.0260 [26.060]
-TCWXY69LF	69	1.547 [39.30]	1.339 [34.00]	1.299 [33.00]	1.3800 [35.052]

NOTES:

1. MATERIALS:

   RECEPTACLE HOUSING – LCP, UL-94V-0. COLOR: NATURAL.

   RECEPTACLE TERMINALS – COPPER ALLOY, PLATED WITH GOLD OR GXT IN CONTACT AREA AND 100u"/2.54μ Sn ON SOLDER LEGS WITH AN OVERALL 50u"/1.27u Ni UNDERPLATE.

   PLUG HOUSING – LCP, UL-94V-0. COLOR: NATURAL.

   PLUG TERMINALS – COPPER ALLOY, PLATED WITH GOLD OR GXT IN CONTACT AREA AND 100u"/2.54μ Sn ON SOLDER LEGS WITH AN OVERALL 50u"/1.27u Ni UNDERPLATE.

   RETENTION DEVICE – BRASS, PLATED WITH 100u"/2.54u Sn OVER NICKEL.

2. REFERENCE GS-12-0977 FOR PRODUCT PERFORMANCE AND ENVIRONMENTAL RESISTANCE DATA.

3. SEE TA-774 FOR FURTHER DESCRIPTION OF HOW THIS DIMENSION IS APPLIED.

4. RECOMMENDED SOLDER PASTE THICKNESS IS .006 TO .008 INCHES THICK.

5. THE TOE HEIGHT OF THE SOLDER TAIL SHALL BE MEASURED FROM THE LOWEST POINT OF THE .004 CO-PLANARITY GRAVITY PLANE. THIS MEASUREMENT IS NOT TO EXCEED A WINDOW OF .000 TO .007 INCHES.

6. THREE SLOTS MAY BE LOCATED AT EITHER END OF HOUSING.

7. THE HOUSING WILL WITHSTAND EXPOSURE TO 260°C PEAK TEMPERATURE FOR 30 SECONDS IN A CONVECTION INFRA RED OR VAPOR PHASE REFLOW OVEN. SEE APPLICATION/PROCEDURES IF THEY ARE AVAILABLE

8. PRODUCT WITH "LF" AT THE END MEETS EUROPEAN UNION DIRECTIVES AND OTHER COUNTRY REGULATION AS DESCRIBED IN GS-22-008.

mat'l. code	surface ISO 1302	tolerance ISO 406 ISO 1101	projection
ltr / ecn no / dr / date	tolerances unless otherwise specified		
C	angles 0°±2°	linear .XX±.01/.X±0.3; .XXX±.005/.XX±0.13; .XXXX±.0020/.XXX±0.051	INCH/MM
			scale 5:1
	dr	J.ZHOU	2011-07-20
	engr	J.ZHOU	2011-07-20
	chr	J.ZHOU	2011-07-20
	appd	R.BIAN	2011-07-20
sheet index / revision sheet			

product family: CONAN®

title: CONAN® CONNECTOR ASSEMBLY

dwg no: 10118744 — sheet 6 of 7 — size A3

type: Product Customer Drawing

FCIconnect.com
Copyright FCI

PRODUCT NUMBER
SEE TABLE

CONAN® ASSEMBLY PART NUMBER

10118744 – T C W 3 Y ZZ LF

LEAD FREE
SEE NOTE 8

TYPE	T
PLUG WITH PEGS	1
RECEPTACLE WITH PEGS	3

PICK AND PLACE CAP OR TAPE	C
WITH CAP	1

PACKAGING	W
PRESSURE SEALED TAPE & REEL	3

Y	PLUG HEIGHT	RECEPTACLE HEIGHT	MATED HEIGHT +.010 −.008 [+.25] [−.20]
1	.034 [.86]	.129 [3.28]	.163 [4.15]
2	.048 [1.23]	SEE Y=1 FOR ALL RECEPTACLES	.177 [4.50]
3	.068 [1.73]		.197 [5.00]
4	.107 [2.72]		.236 [6.00]
5	.1465 [3.721]		.276 [7.00]

ZZ	NUMBER OF POSITIONS
09	9
11	11
15	15
21	21
25	25
31	31
41	41
51	51
69	69

EXAMPLE: 10118744–3131125LF
IS A CONAN® RECEPTACLE ASSEMBLY,
HAVING PEGS AND WITH A PICK AND PLACE CAP.
IT IS .13 [3.2] HIGH AND 25 POSITIONS AND IS
PACKAGED IN PRESSURE SEALED TAPE,REEL AND LEAD FREE.

mat'l. code				surface ISO 1302	tolerance ISO 406 ISO 1101	projection	product family CONAN®
ltr	ecn no	dr	date	tolerances unless otherwise specified			title
C				angles 0°±2°	linear .XX±.01/.X±0.3 / .XXX±.005/.XX±0.13 / .XXXX±.0020/.XXX±0.051	INCH/MM	CONAN® CONNECTOR ASSEMBLY
						scale 5:1	
				dr J.ZHOU	2011-07-20	FCI	dwg no 10118744 sheet 7 of 7 size A3
				engr J.ZHOU	2011-07-20		
				chr J.ZHOU	2011-07-20		
				appd R.BIAN	2011-07-20		type Product Customer Drawing
sheet index	revision sheet						

FCIconnect.com
Copyright FCI

ООО «ЛайфЭлектроникс» “LifeElectronics” LLC

ИНН 7805602321 КПП 780501001 Р/С 40702810122510004610 ФАКБ "АБСОЛЮТ БАНК" (ЗАО) в г.Санкт-Петербурге К/С 30101810900000000703 БИК 044030703

Компания «Life Electronics» занимается поставками электронных компонентов импортного и отечественного производства от производителей и со складов крупных дистрибьюторов Европы, Америки и Азии.

С конца 2013 года компания активно расширяет линейку поставок компонентов по направлению коаксиальный кабель, кварцевые генераторы и конденсаторы (керамические, пленочные, электролитические), за счёт заключения дистрибьюторских договоров

Мы предлагаем:

- *Конкурентоспособные цены и скидки постоянным клиентам.*
- *Специальные условия для постоянных клиентов.*
- *Подбор аналогов.*
- *Поставку компонентов в любых объемах, удовлетворяющих вашим потребностям.*

- *Приемлемые сроки поставки, возможна ускоренная поставка.*
- *Доставку товара в любую точку России и стран СНГ.*
- *Комплексную поставку.*
- *Работу по проектам и поставку образцов.*
- *Формирование склада под заказчика.*

- *Сертификаты соответствия на поставляемую продукцию (по желанию клиента).*
- *Тестирование поставляемой продукции.*
- *Поставку компонентов, требующих военную и космическую приемку.*
- *Входной контроль качества.*
- *Наличие сертификата ISO.*

В составе нашей компании организован Конструкторский отдел, призванный помогать разработчикам, и инженерам.

Конструкторский отдел помогает осуществить:

- *Регистрацию проекта у производителя компонентов.*
- *Техническую поддержку проекта.*
- *Защиту от снятия компонента с производства.*
- *Оценку стоимости проекта по компонентам.*
- *Изготовление тестовой платы монтаж и пусконаладочные работы.*

Тел: +7 (812) 336 43 04 (многоканальный)
Email: org@lifeelectronics.ru

www.lifeelectronics.ru