Honeywell

SENSOR PRODUCTS

*Advance Information*

# LINEAR POSITION SENSOR MODULE

## Features

- 0-10 mm Magnetic Travel (Magnet Dependent)
- Continuous PWM and Analog Voltage Outputs
- 0.2mm Accuracy (Magnet Dependent)
- 0.05mm Repeatability
- -40° to +85°C Operating Temperature Range
- 1%/100°C Temperature Effect
- Small PCB Package
- 6 to 20 volt DC Single Supply Required

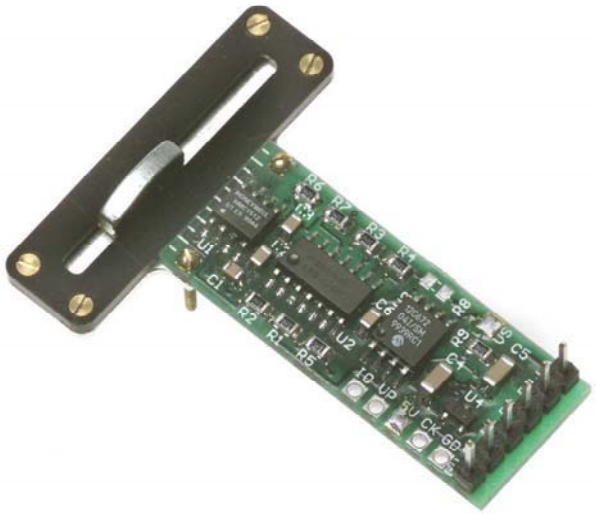

## General Description

The Honeywell HMR4001 is a high-resolution single sensor module capable of measuring linear or angular position. Advantages include high sensitivity so lower cost magnets such as alnico or ceramic can be used, insensitivity to shock and vibration, and ability to withstand large variations in the gap between the sensor and the magnet.

The HMR4001 is manufactured with Honeywell's HMC1512 Magnetic Displacement Sensor IC, which provides better performance than Hall Effect devices and only needs a magnetic field source greater than 80 gauss. Dual frequency PWM and analog outputs plus a sleep mode function are included on board

## APPLICATIONS

- **Linear Displacement**
- **Shaft Position**
- **Angular Displacement**
- **Proximity Detection**

Block Diagram

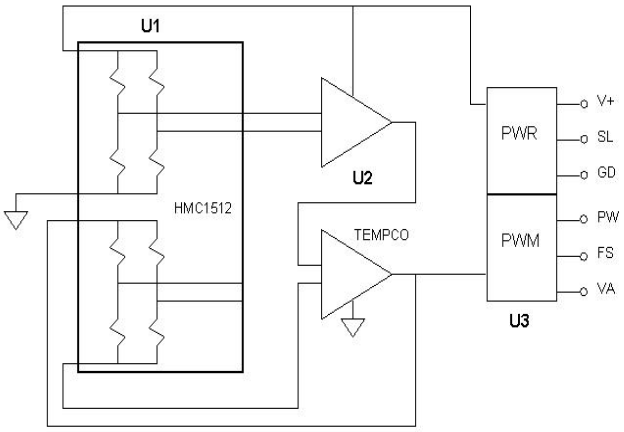


**Web Site:** www.magneticsensors.com
**Email:** ssec.customer.service@honeywell.com



**Honeywell**
**Solid State Electronics Center**
**12001 State Highway 55**
**Plymouth, Minnesota 55441-4799**
**1-800-323-8295**

## SPECIFICATIONS

| Characteristics | Conditions | Min | HMR4001 Typ | Max | Units |
|---|---|---|---|---|---|
| ***Linear Position*** | | | | | |
| Range | > 80 gauss at sensor | | 10 | | mm |
| Accuracy | > 80 gauss at sensor | | 0.2 | | mm |
| Repeatability | > 80 gauss at sensor | | 0.05 | | mm |
| ***Angular Position*** | | | | | |
| Range | > 80 gauss at sensor | | 90 | | deg |
| Accuracy | > 80 gauss at sensor | | 0.1 | | deg |
| Repeatability | > 80 gauss at sensor | | 0.07 | | deg |
| ***Magnetic Field*** | | | | | |
| Strength | Repeatability <0.03% FS | 80 | - | - | gauss |
| ***Electrical*** | | | | | |
| Voltage | Unregulated | 6 | - | 20 | volts DC |
| Current Supply | Active Mode - SLEEP pin = 5V (or open)<br>Sleep Mode - SLEEP pin = 0V | | 7<br>< 2 | | mA<br>mA |
| ***PWM Output*** | | | | | |
| Frequency | FS = 5V (or open)<br>FS = 0V | | 350<br>250 | | Hz<br>Hz |
| Frequency Accuracy | Ambient Temperature (+23°C) | +/-8 | - | - | % |
| PWM Range | “1” Level Duty Cycle | 1 | - | 99 | % |
| PWM Amplitude | “1” Level at any Position | 4.5 | - | 5.5 | Volts pk-pk |
| ***Analog Output*** | | | | | |
| Range | Ambient Temperature (+23°C) | - | 4.0 | - | volts |
| ***Physical*** | | | | | |
| Dimensions | circuit board only | | 15x48.5x12 | | mm |
| Weight | circuit board only | | 5 | | grams |
| ***Environment*** | | | | | |
| Temperature | Operating<br>Storage | -40<br>-55 | -<br>- | +85<br>+125 | °C<br>°C |



**Honeywell**
**Solid State Electronics Center**
**12001 State Highway 55**
**Plymouth, Minnesota 55441-4799**
**1-800-323-8295**

## Pin Configuration

| Pin | Function | Description |
|---|---|---|
| VA | ANALOG OUTPUT | Analog Version of the PWM Output Using a Low Pass Filter. |
| PW | PWM OUTPUT | Digital Signal With the “1” Level Equivalent to the Position of the Magnet. Period at 250 or 350 Hz. |
| FS | FREQUENCY SELECT INPUT | Selects the Pulse Width Modulation Frequency: 1=350Hz, 0=250Hz (onboard pullup) |
| V+ | POWER SUPPLY INPUT | Power Supply Input of +6 to +20 Volts DC. |
| SL | SLEEP/WAKE INPUT | Selects the Wake or Sleep Mode: 1=Wake, 0=Sleep. Onboard Pullup Resistor to Keep Board in Wake Mode. |
| GD | GROUND | Ground Reference for Supply and I/O |

## Circuit Board Layout

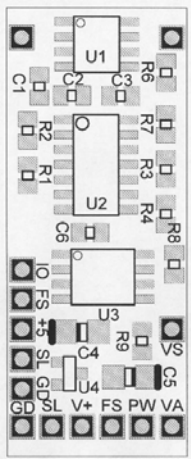


## Application Notes

Very high precision position measurements using weak magnetic fields should note the influence of the earth’s magnetic field (~ 0.6 gauss) bias on the sensed magnet position.

The center-line of HMC1512 sensor integrated circuit U1 is determined to be midpoint (50% Pulse Width, 2.5v Analog) for position sensing.

Only one of the two sensor bridges in the HMC1512 is used for sensing the external magnetic field. The other magneto-resistive bridge network is used as temperature compensation network to retain precise positioning over a broad temperature range. Thus the single bridge provides its linearity over a 90° sweep (+/- 45°) as opposed to when both HMC1512 bridges are working together for a 180° (+/- 90°) sweep.

For best performance, a magnetic field of at least 80 gauss measured at the sensor location should be maintained. A simple dipole magnet usually has the strongest field near its poles, and the field decreases with the distance. For example: An AlNiCo cylindrical magnet with a 0.25” diameter has field strength of 700 gauss at its surface. With a 0.25” gap between the sensor and the magnet, the field at the sensor is about 170 gauss. This is enough field strength to maintain the sensor in the saturation condition for most applications.



**Honeywell**
**Solid State Electronics Center**
**12001 State Highway 55**
**Plymouth, Minnesota 55441-4799**
**1-800-323-8295**

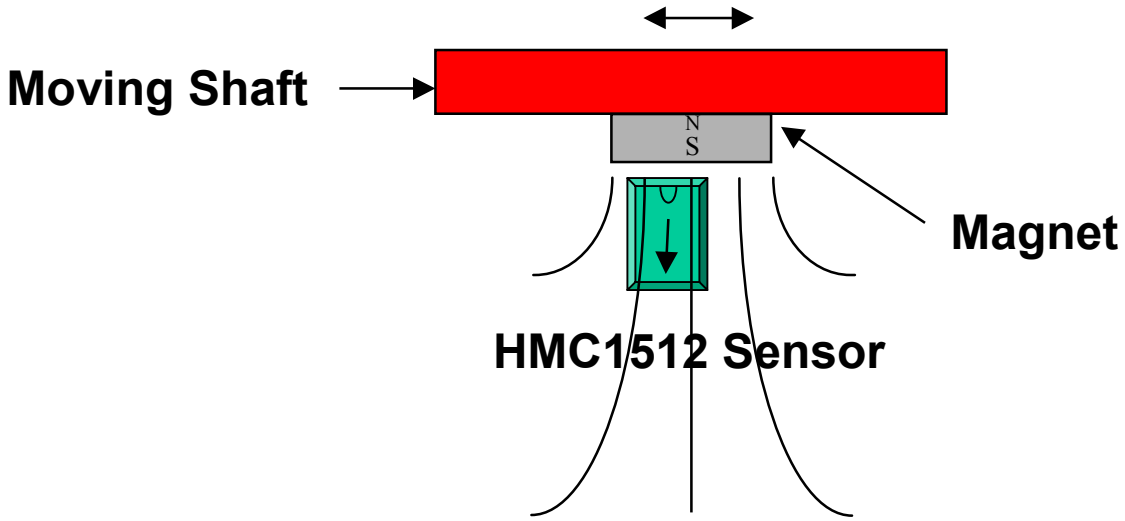


## Demonstration PCB Module

The HMR4001 Demo Module includes an attached magnet and slide assembly for evaluating the performance of the module.

## Ordering Information

| Ordering Number | Product |
|---|---|
| HMR4001-D00 -DEMO<br>HMR4001-D00 | PCB Module with Attached Magnet Assembly<br>PCB Module Only |

Honeywell reserves the right to make changes to improve reliability, function or design. Honeywell does not assume any liability arising out of the application or use of any product or circuit described herein; neither does it convey any license under its patent rights nor the rights of others.



**Honeywell**
**Solid State Electronics Center**
**12001 State Highway 55**
**Plymouth, Minnesota 55441-4799**
**1-800-323-8295**

ООО «ЛайфЭлектроникс» “LifeElectronics” LLC

ИНН 7805602321 КПП 780501001 Р/С 40702810122510004610 ФАКБ "АБСОЛЮТ БАНК" (ЗАО) в г.Санкт-Петербурге К/С 30101810900000000703 БИК 044030703

*Компания «Life Electronics» занимается поставками электронных компонентов импортного и отечественного производства от производителей и со складов крупных дистрибьюторов Европы, Америки и Азии.*

*С конца 2013 года компания активно расширяет линейку поставок компонентов по направлению коаксиальный кабель, кварцевые генераторы и конденсаторы (керамические, пленочные, электролитические), за счёт заключения дистрибьюторских договоров*

*Мы предлагаем:*

- *Конкурентоспособные цены и скидки постоянным клиентам.*
- *Специальные условия для постоянных клиентов.*
- *Подбор аналогов.*
- *Поставку компонентов в любых объемах, удовлетворяющих вашим потребностям.*

- *Приемлемые сроки поставки, возможна ускоренная поставка.*
- *Доставку товара в любую точку России и стран СНГ.*
- *Комплексную поставку.*
- *Работу по проектам и поставку образцов.*
- *Формирование склада под заказчика.*

- *Сертификаты соответствия на поставляемую продукцию (по желанию клиента).*
- *Тестирование поставляемой продукции.*
- *Поставку компонентов, требующих военную и космическую приемку.*
- *Входной контроль качества.*
- *Наличие сертификата ISO.*

*В составе нашей компании организован Конструкторский отдел, призванный помогать разработчикам, и инженерам.*

*Конструкторский отдел помогает осуществить:*

- *Регистрацию проекта у производителя компонентов.*
- *Техническую поддержку проекта.*
- *Защиту от снятия компонента с производства.*
- *Оценку стоимости проекта по компонентам.*
- *Изготовление тестовой платы монтаж и пусконаладочные работы.*

*Тел: +7 (812) 336 43 04 (многоканальный)*
*Email: org@lifeelectronics.ru*

***www.lifeelectronics.ru***