THIS DRAWING IS UNPUBLISHED. RELEASED FOR PUBLICATION 20
© COPYRIGHT 20 BY TYCO ELECTRONICS CORPORATION. ALL RIGHTS RESERVED.

LOC	DIST
-	-

REVISIONS

P	LTR	DESCRIPTION	DATE	DWN	APVD
	E	REV PER ECO-08-032072	19JAN2009	CR	PD

1. PART NUMBER CHANGES AND OR DESIGN CHANGES AFFECTING ITEM INTERCHANGEABILITY REQUIRE PRIOR TYCO ELECTRONICS APPROVAL AND AUTHORIZATION BY REVISION TO THIS DRAWING.

2. MATERIAL:
   INSULATORS: THERMOPLASTIC. GLASS REINFORCED UL94V-0 FLAMMABILITY RATED.
   CONTACTS: COPPER ALLOY
3. FINISHES:
   CONTACT PLATING: SELECTIVE GOLD: 0.76µm MIN THK OVER NICKEL: 1.27µm MIN THK
   PCB TERMINATION: TIN PLATED, MATTE FINISH: 1.78µm MIN THK OVER NICKEL: 1.27µm MIN THK

4. CONNECTOR ACCEPTS 2.36±0.13 THK PCB.

5. KEEP OUT AREA FOR COMPONENTS ONLY.

6. FEATURE REQUIRED FOR USE WITH LATCH.

7. CAUTION:
   LATCHES ARE INTENDED FOR RETENTION OF PC BOARD TO CONNECTOR. DO NOT ATTEMPT TO FULLY EJECT PC BOARD FROM CONNECTOR WHILE DISENGAGING LATCHES, DAMAGE TO LATCHES AND OR CONNECTOR MAY OCCUR.

8. RECOMMENDED GOLD FINGER LENGTH FOR RELIABLE CONTACT.

9. A REFERENCE DIMENSION (X.XX)IS WITHOUT TOLERANCE AND USED FOR INFORMATION PURPOSE ONLY.

10. ITEMS PROVIDED TO THIS SPECIFICARION TO BE PERNAMENTLY IDENTIFIED PER THE FOLLOWING IDENTIFIER:

YEAR WEEK

TYCO ELECTRONICS PN DATE CODE (e.g. 0425)

XXXXXXX-X XXXX

11. REFERENCE TYCO ELECTRONICS PN 1766443-1

12. RECOMMENDED PRINTED CIRCUIT HOLE:
   FINISHED HOLE: Ø1.02±0.08
   DRILLED HOLE: Ø1.15±0.013
   COPPER PLATE: 0.025 MINIMUM (PER SURFACE)
   TIN PLATE: 0.008 MINIMUM (PER SURFACE)

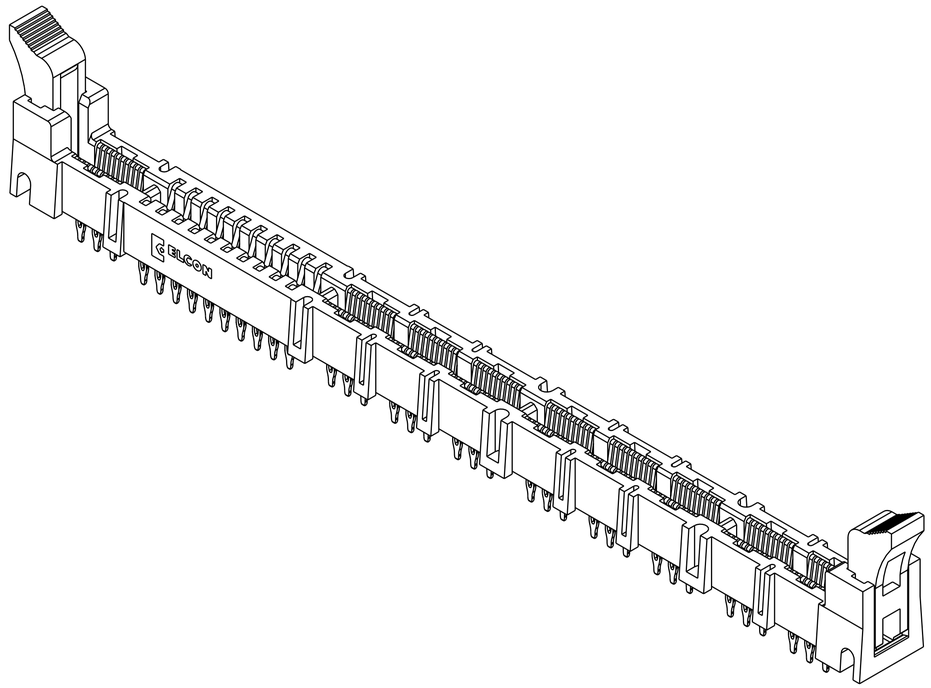

THIS DRAWING IS A CONTROLLED DOCUMENT FOR TYCO ELECTRONICS CORPORATION. IT IS SUBJECT TO CHANGE AND THE CONTROLLING ENGINEERING ORGANIZATION SHOULD BE CONTACTED FOR THE LATEST REVISION.

DWN	C.ROHLER	19JAN2009
CHK	P.DAMATO	19JAN2009
APVD	M.PERCHERKE	19JAN2009

Tyco Electronics
Tyco Electronics
Harrisburg, PA 17105-3608

DIMENSIONS: mm

TOLERANCES UNLESS OTHERWISE SPECIFIED:
0 PLC ±-
1 PLC ±.5
2 PLC ±.25
3 PLC ±-
4 PLC ±-
ANGLES ±.5

MATERIAL - -
FINISH - -

PRODUCT SPEC -
APPLICATION SPEC -
WEIGHT -

NAME
MC-P9S10 MINI CROWNEDGE
SOCKET CONNECTOR, COMPLIANT TAIL
-

SIZE	CAGE CODE	DRAWING NO	RESTRICTED TO
A1	00779	C-1766443	-

CUSTOMER DRAWING | SCALE 3:1 | SHEET 1 OF 4 | REV E

AMP 4805 REV 31MAR2000

Pro/ENGINEER DRAWING

THIS DRAWING IS UNPUBLISHED. RELEASED FOR PUBLICATION 20
© COPYRIGHT 20 BY TYCO ELECTRONICS CORPORATION. ALL RIGHTS RESERVED.

LOC	DIST
-	-

REVISIONS

P	LTR	DESCRIPTION	DATE	DWN	APVD
	-	SEE SHEET 1	-	-	-

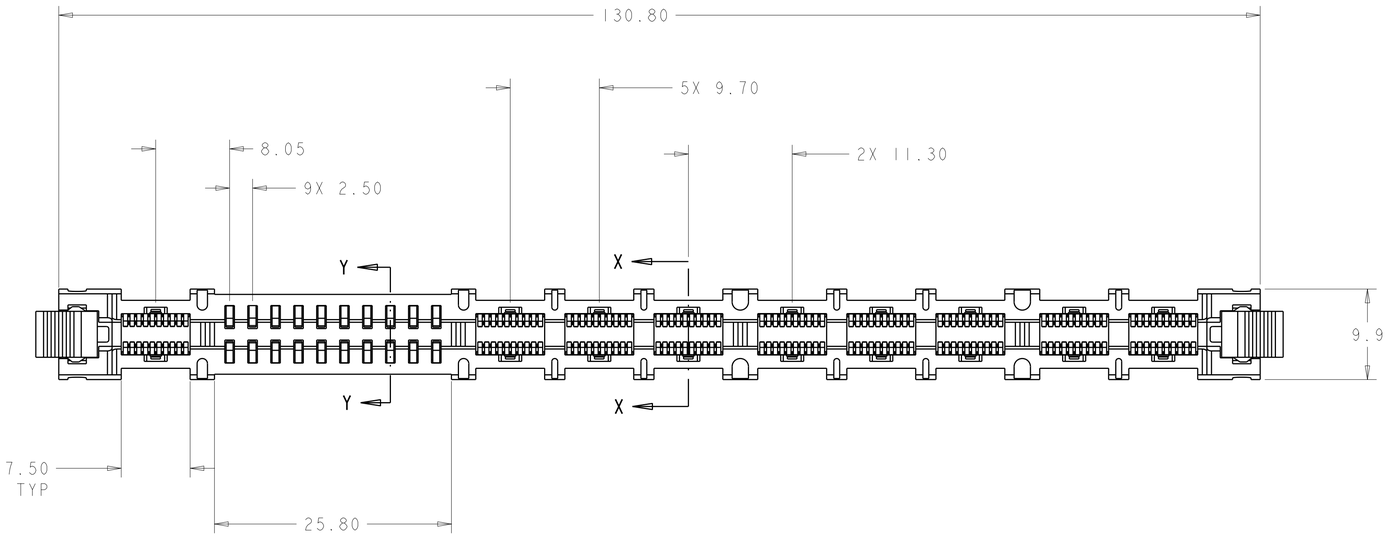

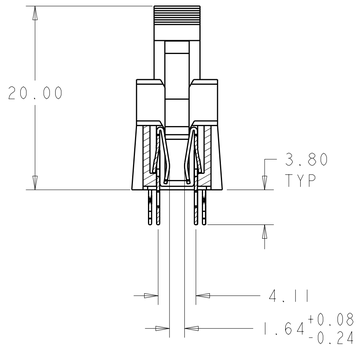

SECTION X-X
ROTATED 90° CW

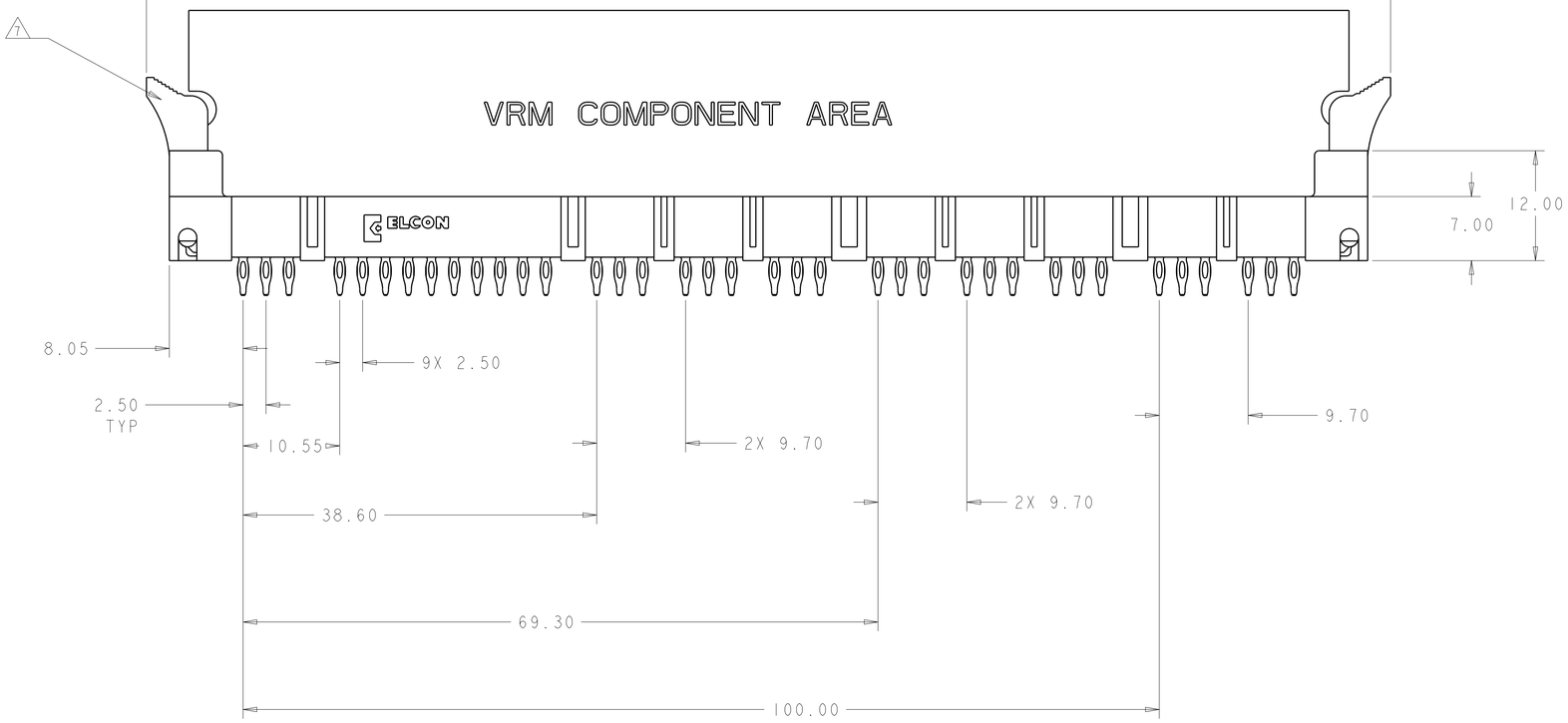

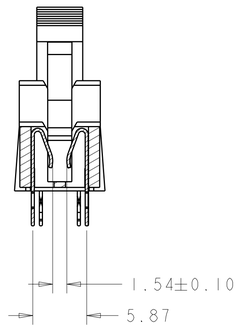

SECTION Y-Y
ROTATED 90° CW

THIS DRAWING IS A CONTROLLED DOCUMENT FOR TYCO ELECTRONICS CORPORATION. IT IS SUBJECT TO CHANGE AND THE CONTROLLING ENGINEERING ORGANIZATION SHOULD BE CONTACTED FOR THE LATEST REVISION.

DIMENSIONS: mm

TOLERANCES UNLESS OTHERWISE SPECIFIED:
0 PLC ±-
1 PLC ±.5
2 PLC ±.25
3 PLC ±-
4 PLC ±-
ANGLES ±.5

MATERIAL - -
FINISH - -

DWN	C.ROHLER	19JAN2009
CHK	P.DAMATO	19JAN2009
APVD	M.PERCHERKE	19JAN2009

PRODUCT SPEC -
APPLICATION SPEC -
WEIGHT -

Tyco Electronics
Tyco Electronics
Harrisburg, PA 17105-3608

NAME MC-P9S10 MINI CROWNEDGE SOCKET CONNECTOR, COMPLIANT TAIL
-

SIZE	CAGE CODE	DRAWING NO	RESTRICTED TO
A1	00779	C-1766443	-

CUSTOMER DRAWING

SCALE	SHEET	OF	REV
3:1	2	4	E

THIS DRAWING IS UNPUBLISHED. RELEASED FOR PUBLICATION 20
© COPYRIGHT 20 BY TYCO ELECTRONICS CORPORATION. ALL RIGHTS RESERVED.

LOC	DIST
-	-

REVISIONS

P	LTR	DESCRIPTION	DATE	DWN	APVD
	-	SEE SHEET 1	-	-	-

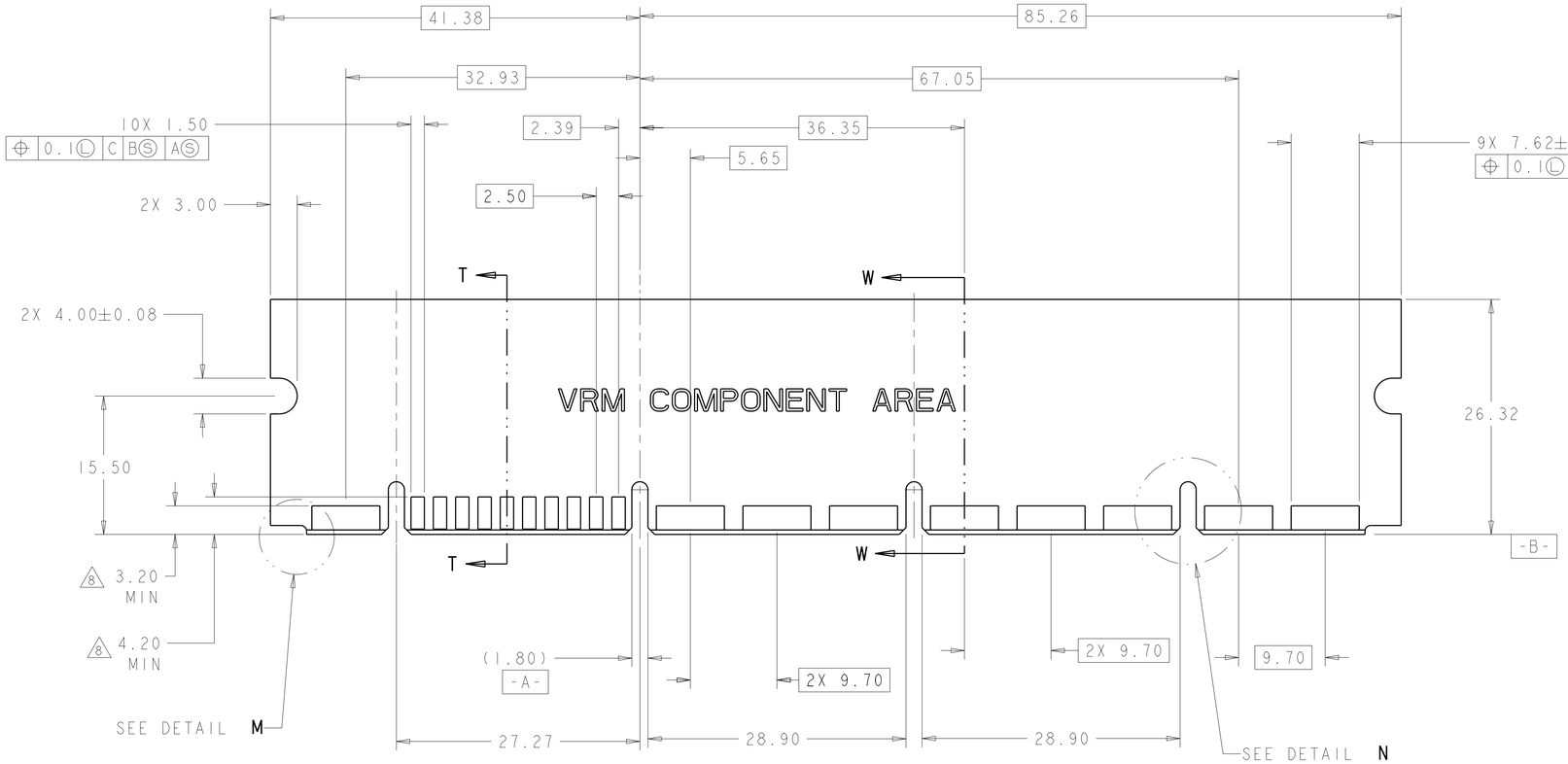

RECOMMENDED MATING BOARD

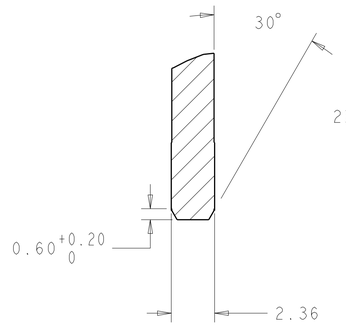

SECTION T-T
SCALE 6:1

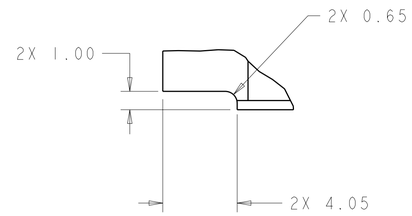

DETAIL M
SCALE 6:1

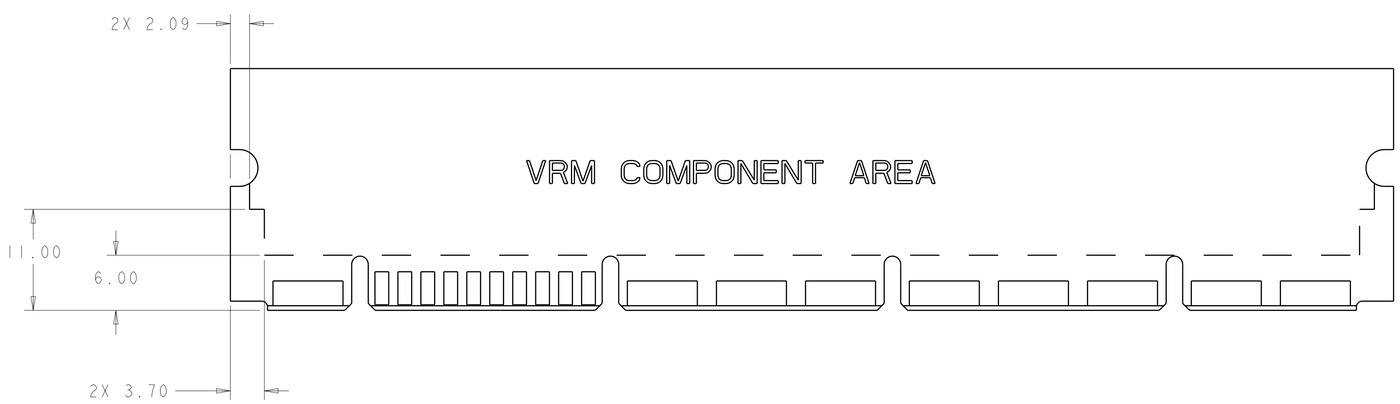

RECOMMENDED PCB KEEP OUT AREA

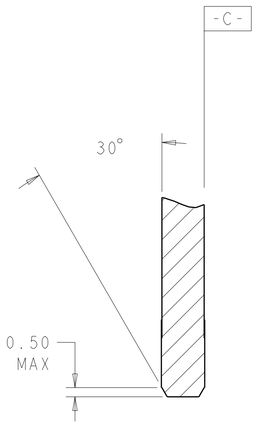

SECTION W-W
SCALE 6:1

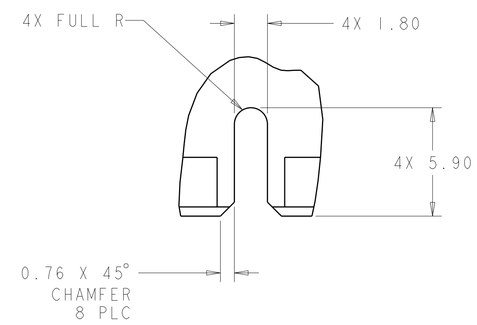

DETAIL N
SCALE 6:1

THIS DRAWING IS A CONTROLLED DOCUMENT FOR TYCO ELECTRONICS CORPORATION. IT IS SUBJECT TO CHANGE. ANY QUESTIONS REGARDING THIS ORGANIZATION SHOULD BE CONTACTED FOR THE LATEST REVISION.

DIMENSIONS: mm

TOLERANCES UNLESS OTHERWISE SPECIFIED:
0 PLC ±-
1 PLC ±.5
2 PLC ±.25
3 PLC ±-
4 PLC ±-
ANGLES ±.5

MATERIAL - -
FINISH - -

DWN	C. ROHLER	19JAN2009
CHK	P. DAMATO	19JAN2009
APVD	M. PERCHERKE	19JAN2009

PRODUCT SPEC -
APPLICATION SPEC -
WEIGHT -

Tyco Electronics
Tyco Electronics
Harrisburg, PA 17105-3608

NAME
MC-P9S10 MINI CROWNEDGE
SOCKET CONNECTOR, COMPLIANT TAIL
-

SIZE	CAGE CODE	DRAWING NO	RESTRICTED TO
A1	00779	C-1766443	-

CUSTOMER DRAWING | SCALE 3:1 | SHEET 3 OF 4 | REV E

THIS DRAWING IS UNPUBLISHED. RELEASED FOR PUBLICATION 20
© COPYRIGHT 20 BY TYCO ELECTRONICS CORPORATION. ALL RIGHTS RESERVED.

LOC	DIST
-	-

REVISIONS

P	LTR	DESCRIPTION	DATE	DWN	APVD
	-	SEE SHEET 1	-	-	-

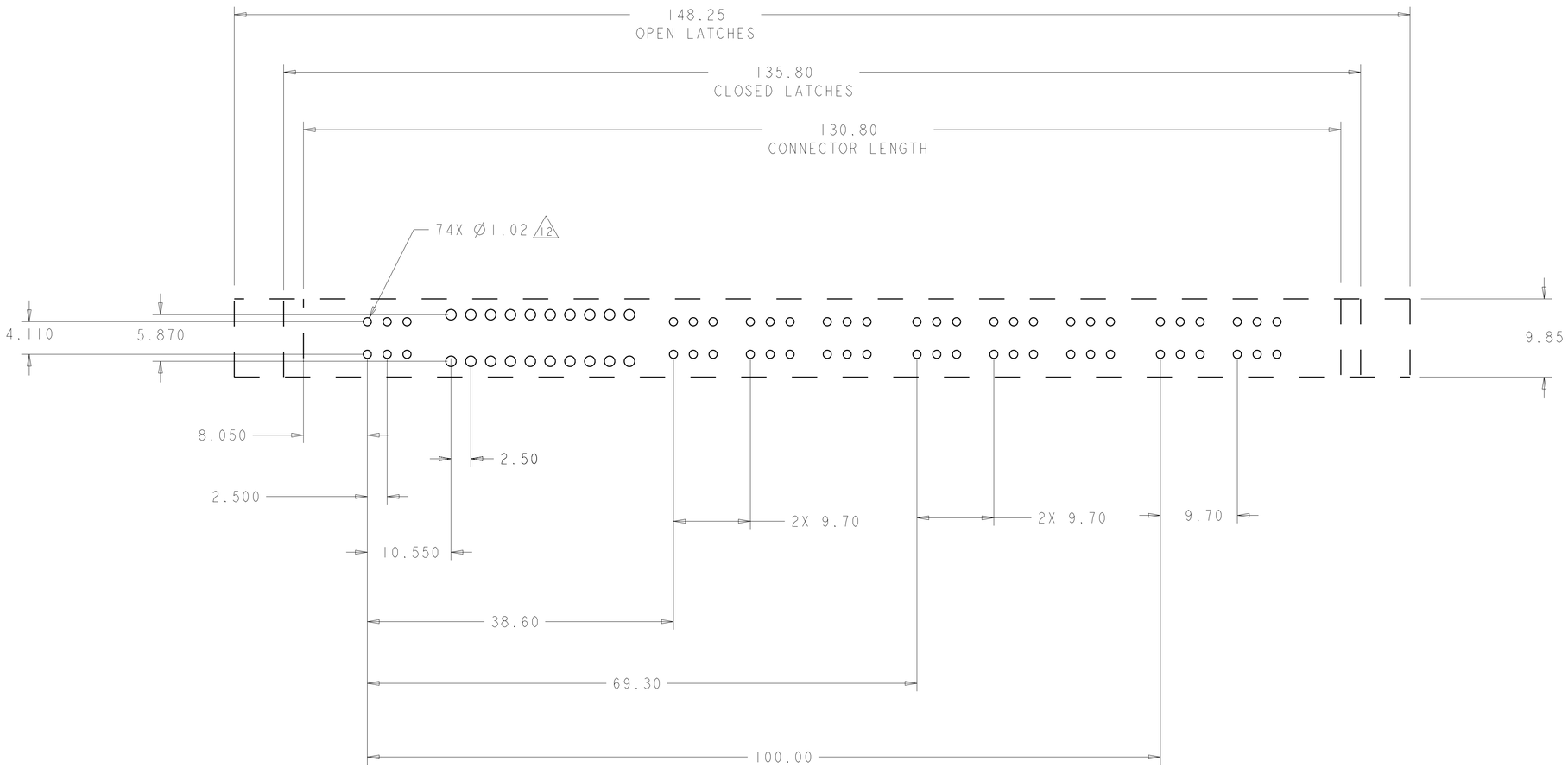

RECOMMENDED PCB LAYOUT

THIS DRAWING IS A CONTROLLED DOCUMENT FOR TYCO ELECTRONICS CORPORATION. IT IS SUBJECT TO CHANGE WITHOUT NOTICE. CONTACT THE ORGANIZATION SHOULD BE CONTACTED FOR THE LATEST REVISION.

DIMENSIONS: mm

TOLERANCES UNLESS OTHERWISE SPECIFIED:
0 PLC ±-
1 PLC ±.5
2 PLC ±.25
3 PLC ±-
4 PLC ±-
ANGLES ±.5

MATERIAL - -
FINISH - -

DWN	C. ROHLER	19JAN2009
CHK	P. DAMATO	19JAN2009
APVD	M. PERCHERKE	19JAN2009

PRODUCT SPEC -
APPLICATION SPEC -
WEIGHT -

Tyco Electronics
Tyco Electronics
Harrisburg, PA 17105-3608

NAME
MC-P9S10 MINI CROWNEDGE
SOCKET CONNECTOR, COMPLIANT TAIL
-

SIZE	CAGE CODE	DRAWING NO	RESTRICTED TO
A1	00779	C-1766443	-

CUSTOMER DRAWING | SCALE 3:1 | SHEET 4 OF 4 | REV E

ООО «ЛайфЭлектроникс» “LifeElectronics” LLC

ИНН 7805602321 КПП 780501001 Р/С 40702810122510004610 ФАКБ "АБСОЛЮТ БАНК" (ЗАО) в г.Санкт-Петербурге К/С 30101810900000000703 БИК 044030703

Компания «Life Electronics» занимается поставками электронных компонентов импортного и отечественного производства от производителей и со складов крупных дистрибьюторов Европы, Америки и Азии.

С конца 2013 года компания активно расширяет линейку поставок компонентов по направлению коаксиальный кабель, кварцевые генераторы и конденсаторы (керамические, пленочные, электролитические), за счёт заключения дистрибьюторских договоров

Мы предлагаем:

- *Конкурентоспособные цены и скидки постоянным клиентам.*
- *Специальные условия для постоянных клиентов.*
- *Подбор аналогов.*
- *Поставку компонентов в любых объемах, удовлетворяющих вашим потребностям.*

- *Приемлемые сроки поставки, возможна ускоренная поставка.*
- *Доставку товара в любую точку России и стран СНГ.*
- *Комплексную поставку.*
- *Работу по проектам и поставку образцов.*
- *Формирование склада под заказчика.*

- *Сертификаты соответствия на поставляемую продукцию (по желанию клиента).*
- *Тестирование поставляемой продукции.*
- *Поставку компонентов, требующих военную и космическую приемку.*
- *Входной контроль качества.*
- *Наличие сертификата ISO.*

В составе нашей компании организован Конструкторский отдел, призванный помогать разработчикам, и инженерам.

Конструкторский отдел помогает осуществить:

- *Регистрацию проекта у производителя компонентов.*
- *Техническую поддержку проекта.*
- *Защиту от снятия компонента с производства.*
- *Оценку стоимости проекта по компонентам.*
- *Изготовление тестовой платы монтаж и пусконаладочные работы.*

Тел: +7 (812) 336 43 04 (многоканальный)
Email: org@lifeelectronics.ru

www.lifeelectronics.ru