THIS DRAWING IS UNPUBLISHED. RELEASED FOR PUBLICATION -
© COPYRIGHT copyright.dgkc- ALL RIGHTS RESERVED.

LOC	DIST
GP	00

REVISIONS

P	LTR	DESCRIPTION	DATE	DWN	APVD
	A	RELEASED PER ECO-12-013192	19OCT2012	BMM	MRS

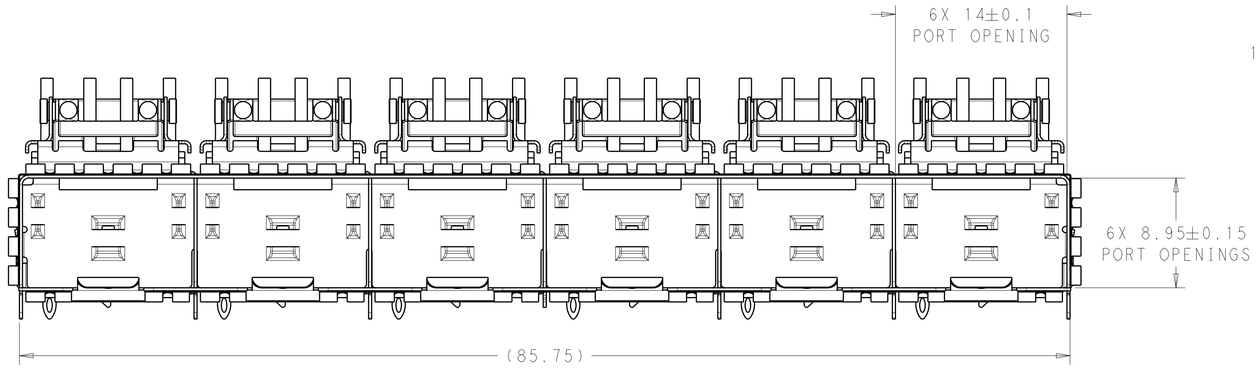

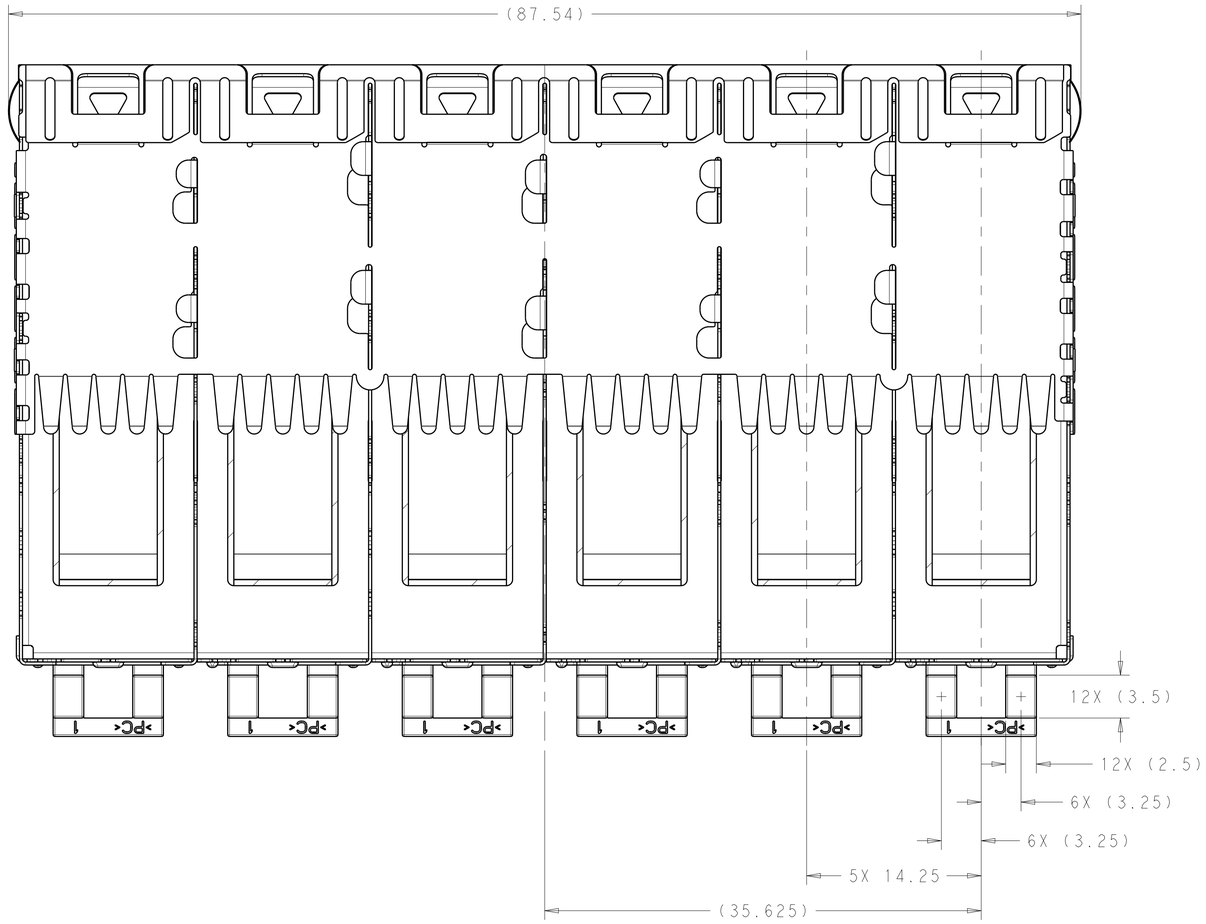

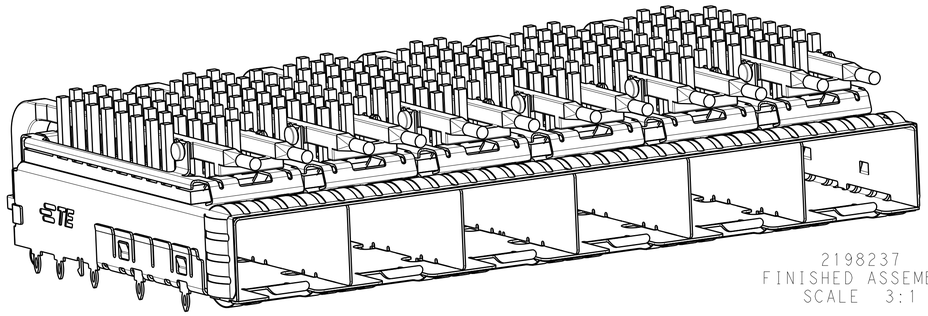

2198237
FINISHED ASSEMBLY
SCALE 3:1

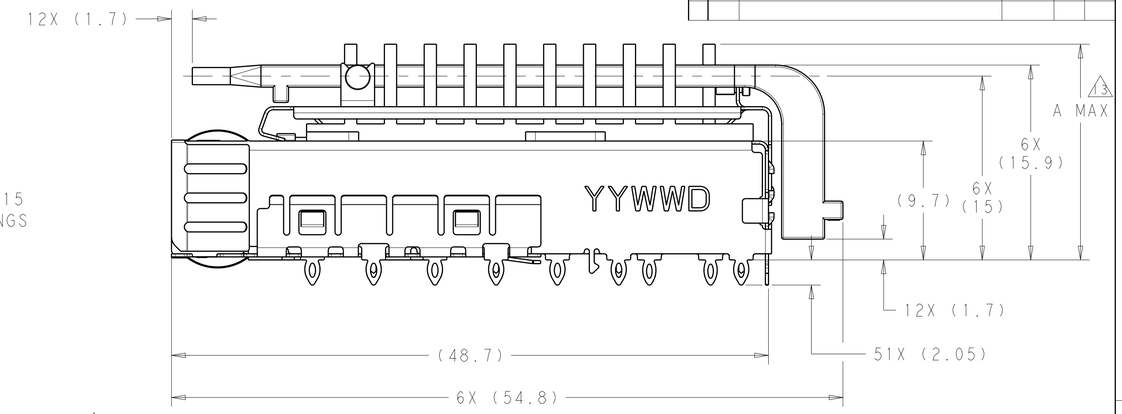

1. MATERIAL:
   CAGE ASSEMBLY: 0.25mm THICK NICKEL SILVER ALLOY.
   HEATSINK/LIGHTPIPE CLIP: STAINLESS STEEL
   LIGHT PIPE: POLYCARBONATE, CLEAR
   HEATSINK: ALUMINUM

2. FINISH:
   SPRINGS: MINIMUM OF 0.8um TIN PLATE OVER A MINIMUM OF 0.8um NICKEL UNDERPLATE.
   NON-PLATED EDGES PERMISSIBLE.
   HEATSINK/LIGHTPIPE CLIP: PASSIVATE
   HEATSINK: ELECTROLESS NICKEL

3. MATES WITH SFP MSA COMPLIANT TRANSCEIVERS.

4. PADS AND VIAS CHASSIS GROUND.

5. INTERPRETATION OF DATUM REFERENCE FRAME IN ACCORDANCE WITH SECT 4.4.1.1 OF ASME Y14.5M-1994.

6. MINIMUM PC BOARD THICKNESS:
   SINGLE SIDED = 1.50mm
   DOUBLE SIDED = 2.25mm

7. HOLE PATTERN REPEATS FOR EACH PORT. SPACING BETWEEN PORTS IS 14.25mm.

8. DATUM AND BASIC DIMENSION ESTABLISHED BY CUSTOMER.

9. REFERENCE APPLICATION SPEC. 114-13120, HOLE A, FOR RECOMMENDED DRILL HOLE DIAMETER AND PLATING THICKNESS.

10. REFERENCE APPLICATION SPEC. 114-13120, HOLE B, FOR RECOMMENDED DRILL HOLE DIAMETER AND PLATING THICKNESS.

11. CERTAIN MATING TRANCEIVERS MAY REQUIRE ADDITIONAL PCB THICKNESS THAT WOULD BE DETERMINED BY THE CUSTOMER.

12. PRODUCT COMPLIES WITH SPECIFICATION SFF-8433 IMPROVED PLUGGABLE FORM FACTOR FOR SFP+ GANGED CAGES.

13. DIMENSION APPLIES PRIOR TO INSERTION OF SFP MODULE.

14. HEATSINK, HEATSINK CLIP, AND LIGHTPIPE SHIPPED UNASSEMBLED TO CAGE ASSEMBLY. CAGE ASSEMBLY TO BE PRESSED INTO PCB PRIOR TO ATTACHING HEATSINK, HEATSINK CLIP, AND LIGHTPIPE TO THE CAGE ASSEMBLY.

15. PACKAGED AS A COMPLETE ASSEMBLY.

	A MAX	APPLICATION	PART NUMBER
15	22.5	NETWORKING, TALL	2198237-4
15	18.1	NETWORKING, SHORT	2198237-3
14	15.5	SAN	2198237-2
14	13.2	PCI	2198237-1

THIS DRAWING IS A CONTROLLED DOCUMENT.

DIMENSIONS: mm

TOLERANCES UNLESS OTHERWISE SPECIFIED:
0 PLC ±0.1
1 PLC ±0.1
2 PLC ±0.1
3 PLC ±0.1
4 PLC ±0.1
ANGLES ±1°

MATERIAL 1
FINISH 2

DWN B. MATTHEWS 15NOV2011
CHK M. SCHMITT 15NOV2011
APVD M. SCHMITT 15NOV2011
PRODUCT SPEC 108-2364
APPLICATION SPEC 114-13120
WEIGHT -

TE Connectivity

NAME SFP+ ENHANCED 1X6 CAGE ASSEMBLY, PRESS FIT, EXTERNAL EMI SPRINGS WITH HEATSINK AND LIGHTPIPE

SIZE A1 | CAGE CODE 00779 | DRAWING NO C-2198237 | RESTRICTED TO -

Customer Drawing | SCALE 4:1 | SHEET 1 OF 4 | REV A

4805 (3/11)

THIS DRAWING IS UNPUBLISHED. RELEASED FOR PUBLICATION -
© COPYRIGHT copyright dgtc ALL RIGHTS RESERVED.

LOC	DIST
GP	00

REVISIONS

P	LTR	DESCRIPTION	DATE	DWN	APVD
	-	SEE SHEET 1	-	-	-

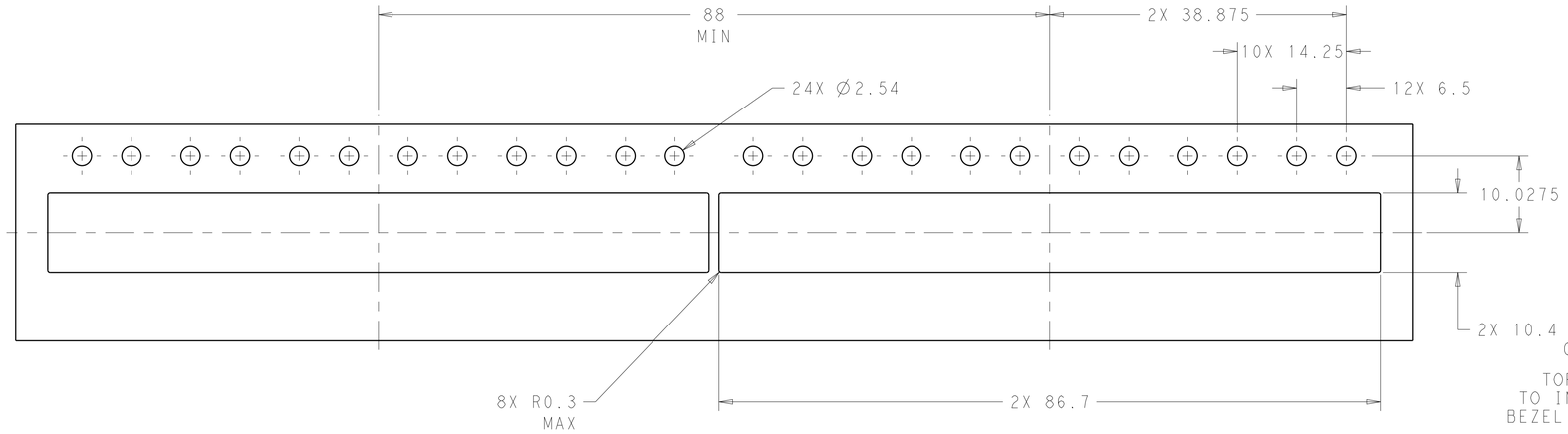

RECOMMENDED BEZEL CUT-OUT
SINGLE SIDED APPLICATIONS
SCALE 5:2

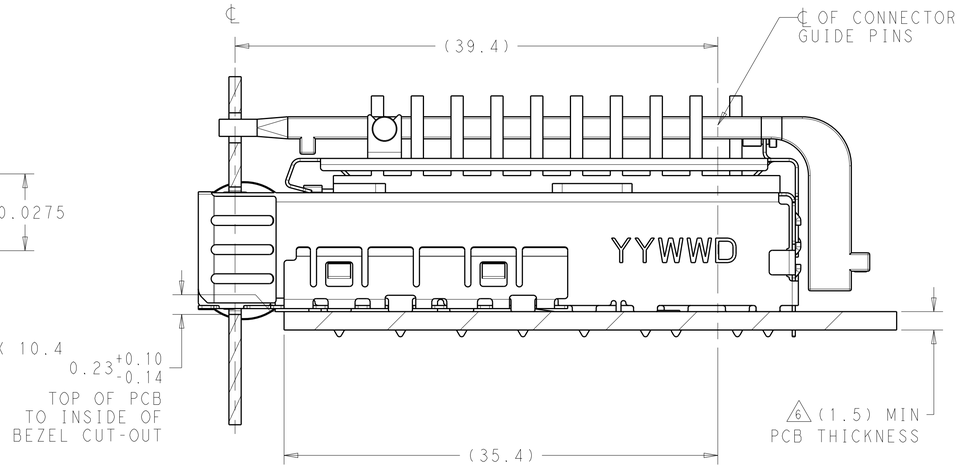

2198237
MOUNTED ON PC BOARD
SHOWN THRU RECOMMENDED BEZEL

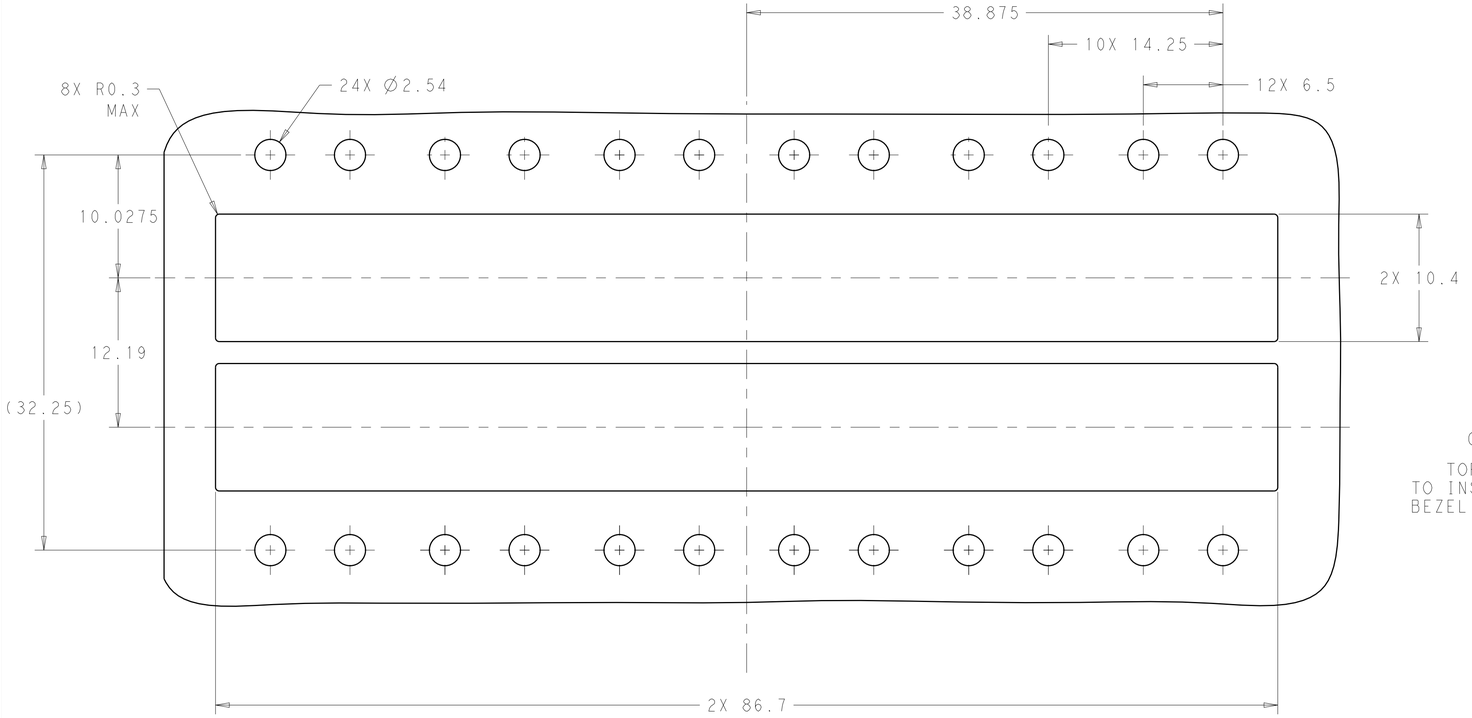

RECOMMENDED BEZEL CUT-OUT
BELLY TO BELLY APPLICATIONS

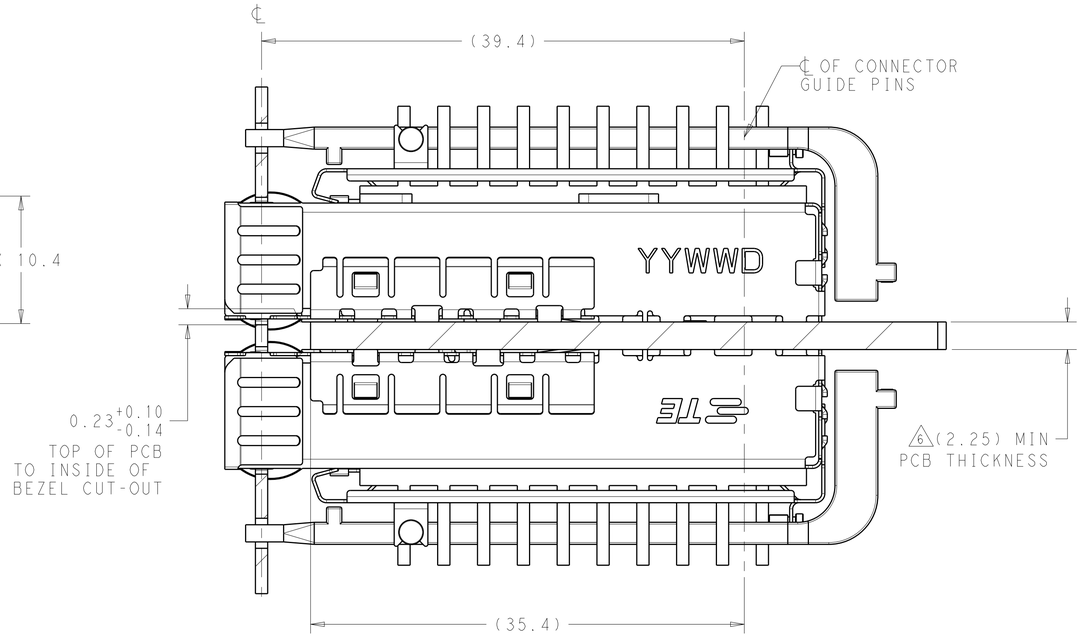

2198237
MOUNTED BELLY TO BELLY ON PC BOARD
SHOWN THRU RECOMMENDED BEZEL

THIS DRAWING IS A CONTROLLED DOCUMENT.

DIMENSIONS: mm

TOLERANCES UNLESS OTHERWISE SPECIFIED:
0 PLC ±0.1
1 PLC ±0.1
2 PLC ±0.1
3 PLC ±0.1
4 PLC ±0.1
ANGLES ±1°

MATERIAL 1
FINISH

DWN B. MATTHEWS 15NOV2011
CHK M. SCHMITT 15NOV2011
APVD M. SCHMITT 15NOV2011
PRODUCT SPEC 108-2364
APPLICATION SPEC 114-13120
WEIGHT -

TE Connectivity

NAME SFP+ ENHANCED 1X6 CAGE ASSEMBLY, PRESS FIT, EXTERNAL EMI SPRINGS WITH HEATSINK AND LIGHTPIPE

SIZE	CAGE CODE	DRAWING NO	RESTRICTED TO
A1	00779	C-2198237	-

Customer Drawing | SCALE 4:1 | SHEET 2 OF 4 | REV A

4805 (3/11)

THIS DRAWING IS UNPUBLISHED. RELEASED FOR PUBLICATION -
© COPYRIGHT copyright.dgkc- ALL RIGHTS RESERVED.

LOC	DIST
GP	00

REVISIONS

P	LTR	DESCRIPTION	DATE	DWN	APVD
	-	SEE SHEET 1	-	-	-

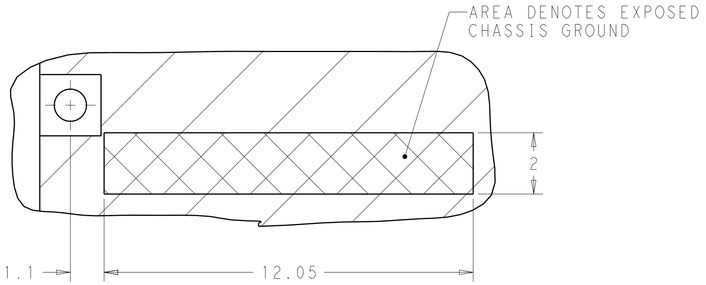

DETAIL A
6X INDIVIDUALLY
SCALE 10:1

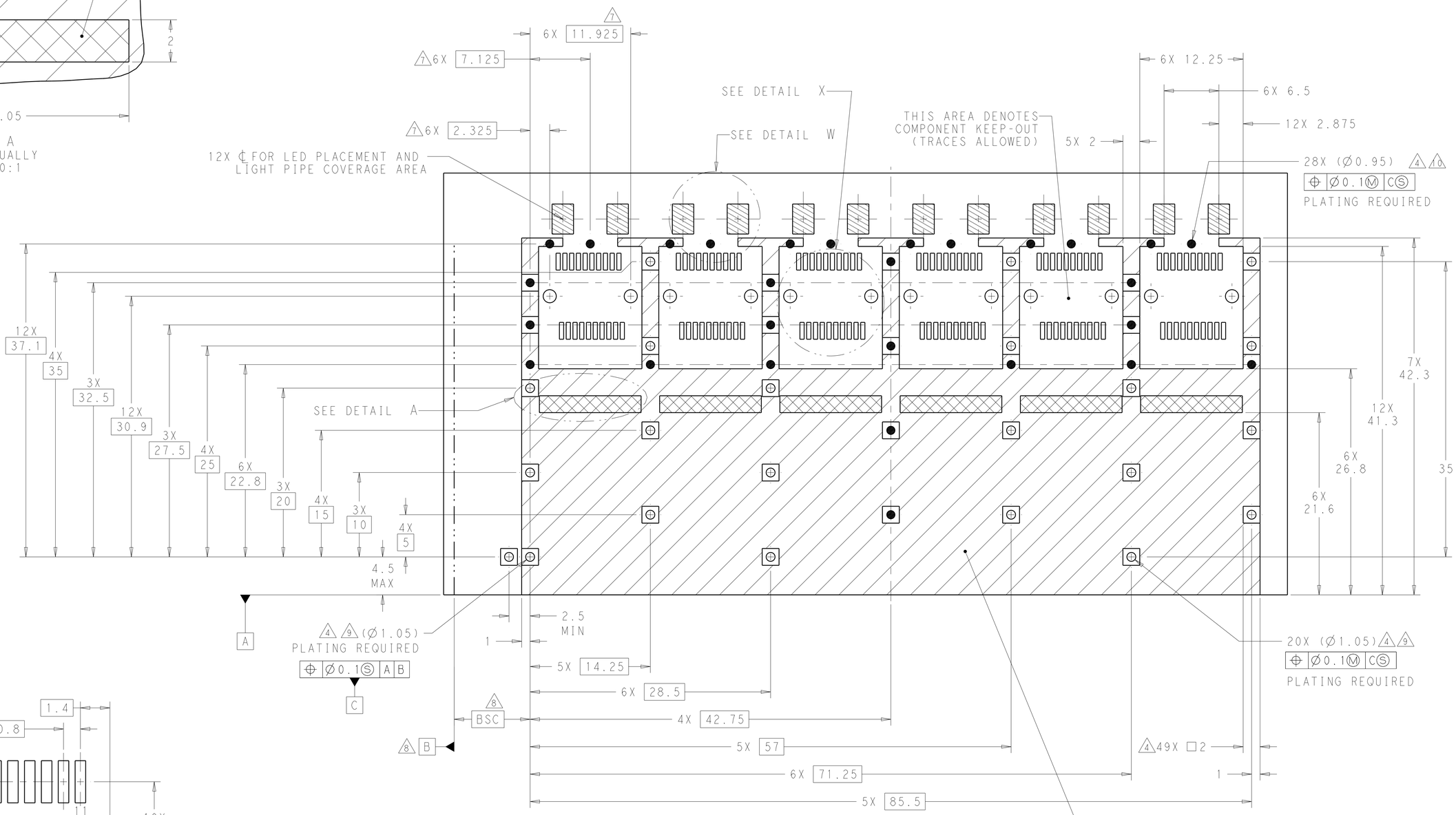

RECOMMENDED PCB CONFIGURATION
WITH KEEP-OUT AREAS
SINGLE SIDED APPLICATIONS
SCALE 4:1

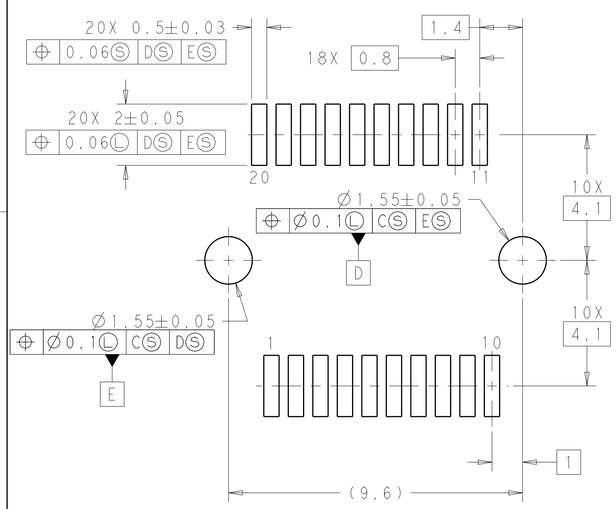

DETAIL X
RECOMMENDED PT CONNECTOR LAYOUT
6X INDIVIDUALLY
SCALE 10:1

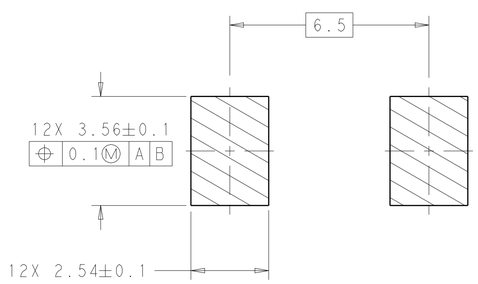

DETAIL W
SCALE 10:1

THIS DRAWING IS A CONTROLLED DOCUMENT.

DIMENSIONS: mm

TOLERANCES UNLESS OTHERWISE SPECIFIED:
0 PLC ±0.1
1 PLC ±0.1
2 PLC ±0.1
3 PLC ±0.1
4 PLC ±0.1
ANGLES ±1°

MATERIAL 1
FINISH

DWN B. MATTHEWS 15NOV2011
CHK M. SCHMITT 15NOV2011
APVD M. SCHMITT 15NOV2011
PRODUCT SPEC 108-2364
APPLICATION SPEC 114-13120
WEIGHT -

TE Connectivity

NAME SFP+ ENHANCED 1X6 CAGE ASSEMBLY, PRESS FIT, EXTERNAL EMI SPRINGS WITH HEATSINK AND LIGHTPIPE

SIZE A1 | CAGE CODE 00779 | DRAWING NO C-2198237 | RESTRICTED TO -

Customer Drawing | SCALE 4:1 | SHEET 3 OF 4 | REV A

THIS DRAWING IS UNPUBLISHED. RELEASED FOR PUBLICATION -
© COPYRIGHT copyright.dgkc- ALL RIGHTS RESERVED.

LOC	DIST
GP	00

REVISIONS

P	LTR	DESCRIPTION	DATE	DWN	APVD
	-	SEE SHEET 1	-	-	-

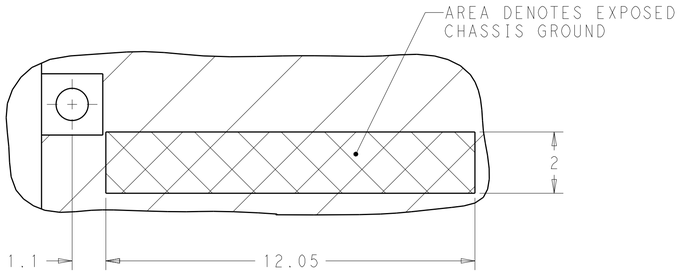

DETAIL B
6X INDIVIDUALLY
SCALE 10:1

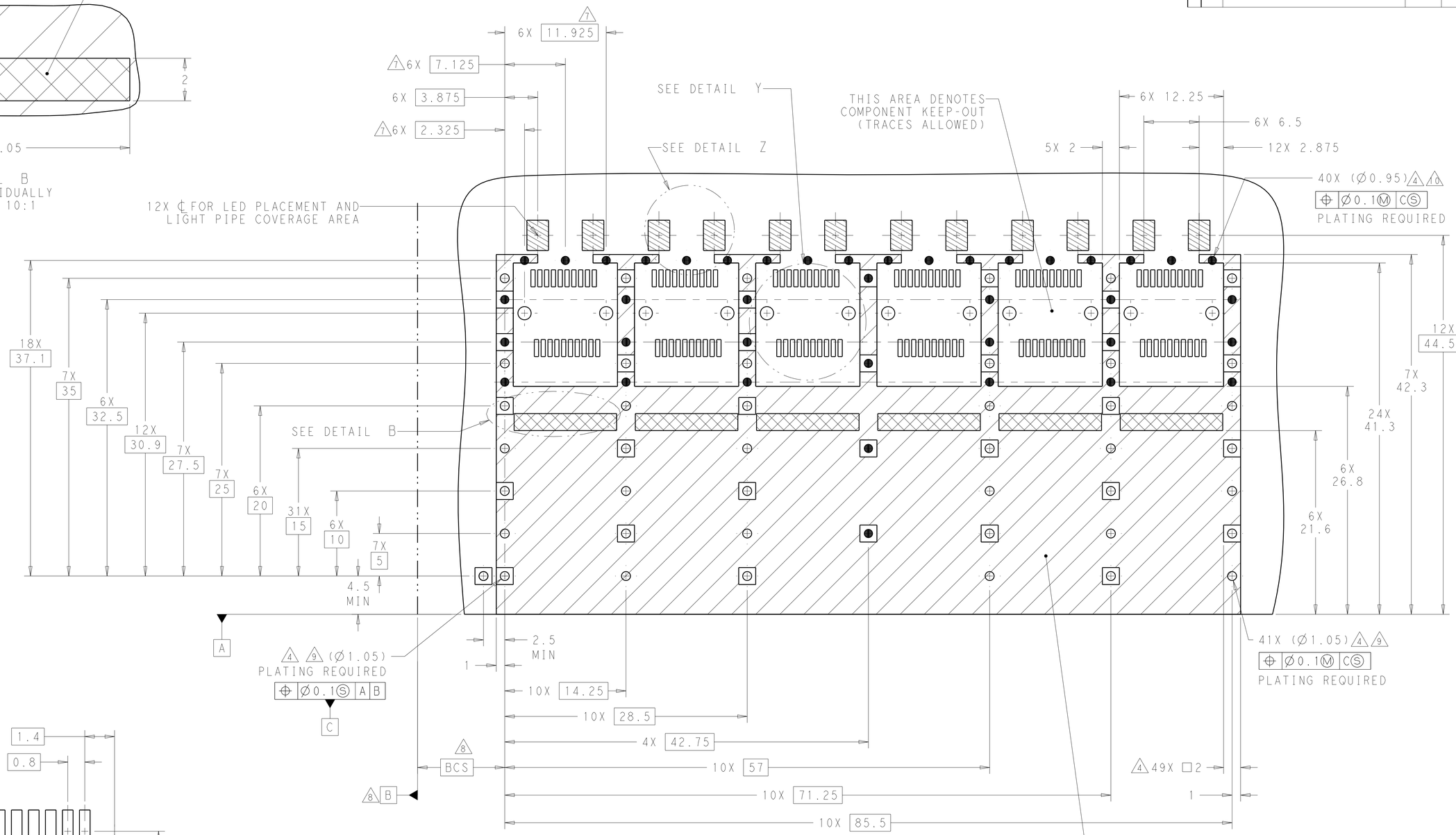

RECOMMENDED PCB CONFIGURATION
WITH KEEP-OUT AREAS
BELLY TO BELLY APPLICATIONS
SCALE 4:1

CROSS-HATCHED AREA DENOTES COMPONENT AND TRACE KEEP-OUT (EXCEPT CHASIS GROUND)

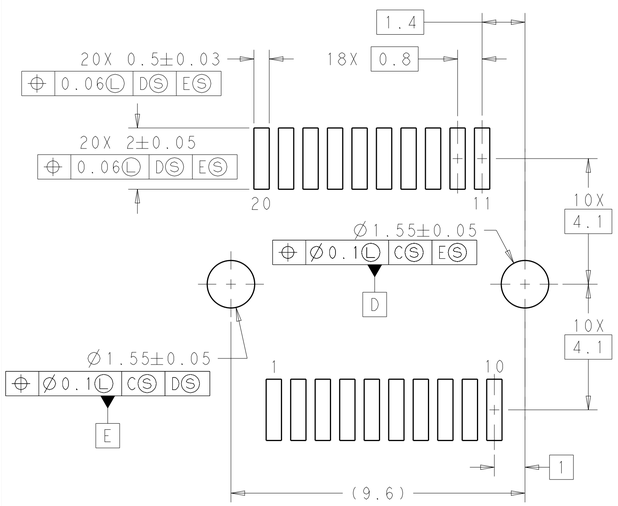

DETAIL Y
RECOMMENDED PT CONNECTOR LAYOUT
12X INDIVIDUALLY
SCALE 10:1

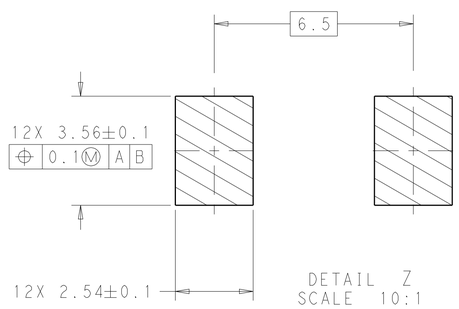

DETAIL Z
SCALE 10:1

THIS DRAWING IS A CONTROLLED DOCUMENT.

DIMENSIONS: mm

TOLERANCES UNLESS OTHERWISE SPECIFIED:
0 PLC ±0.1
1 PLC ±0.1
2 PLC ±0.1
3 PLC ±0.1
4 PLC ±0.1
ANGLES ±1°

MATERIAL 1
FINISH

DWN	B. MATTHEWS	15NOV2011
CHK	M. SCHMITT	15NOV2011
APVD	M. SCHMITT	15NOV2011
PRODUCT SPEC	108-2364	
APPLICATION SPEC	114-13120	
WEIGHT	-	

TE Connectivity

NAME: SFP+ ENHANCED 1X6 CAGE ASSEMBLY, PRESS FIT, EXTERNAL EMI SPRINGS WITH HEATSINK AND LIGHTPIPE

SIZE	CAGE CODE	DRAWING NO	RESTRICTED TO
A1	00779	C-2198237	-

Customer Drawing | SCALE 4:1 | SHEET 4 OF 4 | REV A

4805 (3/11)

ООО «ЛайфЭлектроникс» “LifeElectronics” LLC

ИНН 7805602321 КПП 780501001 Р/С 40702810122510004610 ФАКБ "АБСОЛЮТ БАНК" (ЗАО) в г.Санкт-Петербурге К/С 30101810900000000703 БИК 044030703

Компания «Life Electronics» занимается поставками электронных компонентов импортного и отечественного производства от производителей и со складов крупных дистрибьюторов Европы, Америки и Азии.

С конца 2013 года компания активно расширяет линейку поставок компонентов по направлению коаксиальный кабель, кварцевые генераторы и конденсаторы (керамические, пленочные, электролитические), за счёт заключения дистрибьюторских договоров

Мы предлагаем:

- *Конкурентоспособные цены и скидки постоянным клиентам.*
- *Специальные условия для постоянных клиентов.*
- *Подбор аналогов.*
- *Поставку компонентов в любых объемах, удовлетворяющих вашим потребностям.*

- *Приемлемые сроки поставки, возможна ускоренная поставка.*
- *Доставку товара в любую точку России и стран СНГ.*
- *Комплексную поставку.*
- *Работу по проектам и поставку образцов.*
- *Формирование склада под заказчика.*

- *Сертификаты соответствия на поставляемую продукцию (по желанию клиента).*
- *Тестирование поставляемой продукции.*
- *Поставку компонентов, требующих военную и космическую приемку.*
- *Входной контроль качества.*
- *Наличие сертификата ISO.*

В составе нашей компании организован Конструкторский отдел, призванный помогать разработчикам, и инженерам.

Конструкторский отдел помогает осуществить:

- *Регистрацию проекта у производителя компонентов.*
- *Техническую поддержку проекта.*
- *Защиту от снятия компонента с производства.*
- *Оценку стоимости проекта по компонентам.*
- *Изготовление тестовой платы монтаж и пусконаладочные работы.*

Тел: +7 (812) 336 43 04 (многоканальный)
Email: org@lifeelectronics.ru

www.lifeelectronics.ru