XC822/824

8-Bit Single-Chip Microcontroller

Data Sheet

V1.2 2011-10

Microcontrollers

Edition 2011-10

Published by
Infineon Technologies AG
81726 Munich, Germany

© 2011 Infineon Technologies AG
All Rights Reserved.

Legal Disclaimer

The information given in this document shall in no event be regarded as a guarantee of conditions or characteristics. With respect to any examples or hints given herein, any typical values stated herein and/or any information regarding the application of the device, Infineon Technologies hereby disclaims any and all warranties and liabilities of any kind, including without limitation, warranties of non-infringement of intellectual property rights of any third party.

Information

For further information on technology, delivery terms and conditions and prices, please contact the nearest Infineon Technologies Office (**www.infineon.com**).

Warnings

Due to technical requirements, components may contain dangerous substances. For information on the types in question, please contact the nearest Infineon Technologies Office.

Infineon Technologies components may be used in life-support devices or systems only with the express written approval of Infineon Technologies, if a failure of such components can reasonably be expected to cause the failure of that life-support device or system or to affect the safety or effectiveness of that device or system. Life support devices or systems are intended to be implanted in the human body or to support and/or maintain and sustain and/or protect human life. If they fail, it is reasonable to assume that the health of the user or other persons may be endangered.

XC822/824

8-Bit Single-Chip Microcontroller

Data Sheet

V1.2 2011-10

Microcontrollers

XC822/824 Data Sheet

Revision History: V1.2 2011-10

Previous Versions: V1.1	
Page	Subjects (major changes since last revision)
Page 3	A new variant (SAK-XC822MT-0FRA) was added in Table 2.
Page 19	Added a new chip identification number for variant (SAK-XC822MT-0FRA) in Table 5.

We Listen to Your Comments

Is there any information in this document that you feel is wrong, unclear or missing?
Your feedback will help us to continuously improve the quality of this document.
Please send your proposal (including a reference to this document) to:

mcdocu.comments@infineon.com

Table of Contents

1 Summary of Features 1

2 General Device Information 5
2.1 Block Diagram 5
2.2 Logic Symbol 6
2.3 Pin Configuration 7
2.4 Pin Definitions and Functions 9
2.5 Memory Organization 15
2.6 JTAG ID 18
2.7 Chip Identification Number 19

3 Electrical Parameters 20
3.1 General Parameters 20
3.1.1 Parameter Interpretation 20
3.1.2 Absolute Maximum Rating 21
3.1.3 Operating Condition 22
3.2 DC Parameters 23
3.2.1 Input/Output Characteristics 23
3.2.2 Supply Threshold Characteristics 25
3.2.3 ADC Characteristics 26
3.2.3.1 ADC Conversion Timing 29
3.2.3.2 Out of Range Comparator Characteristics 29
3.2.4 Flash Memory Parameters 30
3.2.5 Power Supply Current 32
3.3 AC Parameters 35
3.3.1 Testing Waveforms 35
3.3.2 Output Rise/Fall Times 36
3.3.3 Oscillator Timing and Wake-up Timing 37
3.3.4 On-Chip Oscillator Characteristics 37
3.3.5 SSC Timing 39
3.3.5.1 SSC Master Mode Timing 39
3.3.5.2 SSC Slave Mode Timing 40
3.3.6 SPD Timing 41

4 Package and Quality Declaration 42
4.1 Package Parameters 42
4.2 Package Outline 43
4.3 Quality Declaration 45

Table of Contents

1 Summary of Features

The XC822/824 has the following features:

- High-performance XC800 Core
  - compatible with standard 8051 processor
  - two clocks per machine cycle architecture (for memory access without wait state)
  - two data pointers
- On-chip memory
  - 8 Kbytes of Boot ROM, Library ROM and User routines
  - 256 bytes of RAM
  - 256 bytes of XRAM
  - 2/4 Kbytes of Flash (includes memory protection strategy)
- I/O port supply at 2.5 V - 5.5 V and core logic supply at 2.5 V (generated by embedded voltage regulator)

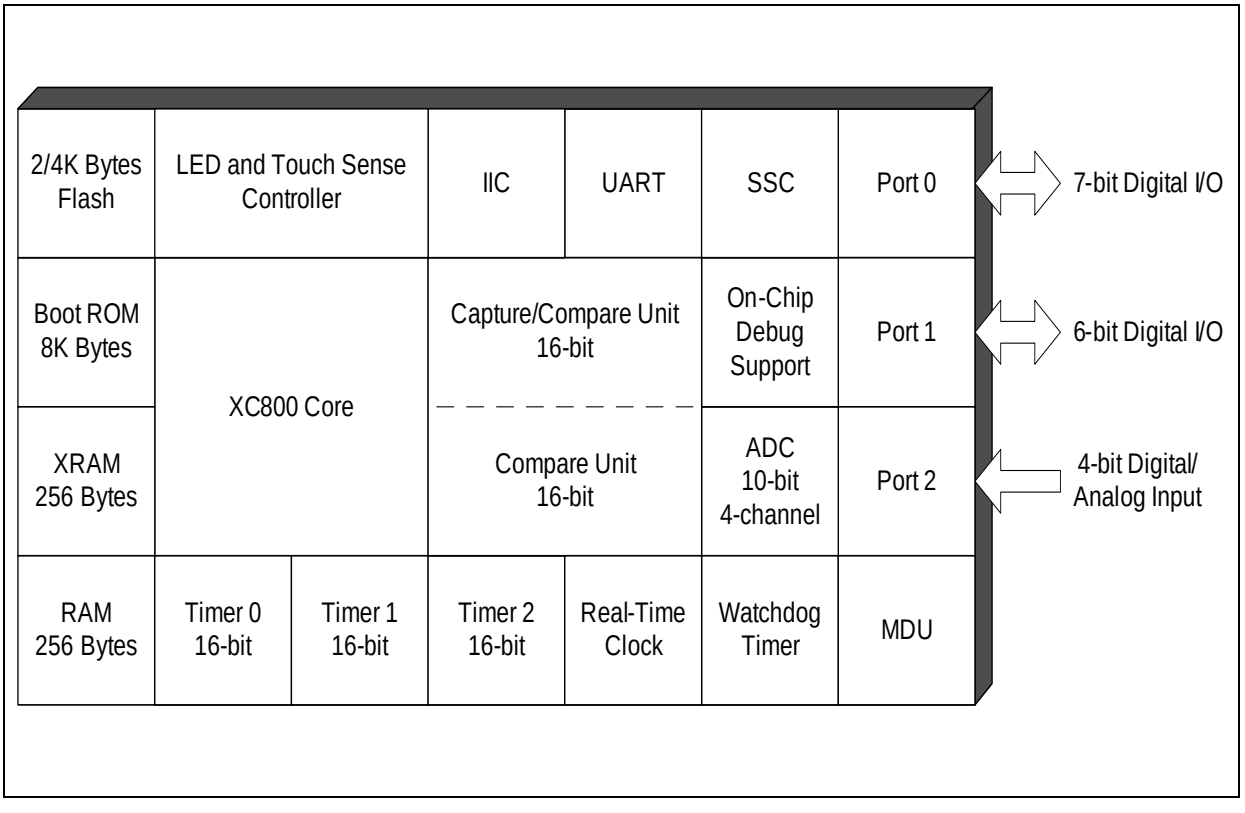

Figure 1 XC822/824 Functional Units

- Power-on reset generation
- Brownout detection for IO supply and core logic supply
- 48 MHz on-chip OSC for clock generation
  - Loss-of-Clock detection

(more features on next page)

Features: (continued)

- Power saving modes
  - idle mode
  - power-down mode with wake-up capability via real-time clock interrupt
  - clock gating control to each peripheral
- Programmable 16-bit Watchdog Timer (WDT) running on independent oscillator with programmable window feature for refresh operation and warning prior to overflow
- Three ports
  - Up to 17 pins as digital I/O
  - 4 pin as digital/analog input
- 4-channel, 10-bit ADC
  - support up to 3 differential input channel
  - results filtering by data reduction or digital low-pass filter, for up to 13-bit results
- Up to 4 channels, Out of range comparator
- Three 16-bit timers
  - Timer 0 and Timer 1 (T0 and T1)
  - Timer 2 (T2)
- Periodic wake-up timer
- Multiplication/Division Unit for arithmetic operations (MDU)
- Capture and Compare unit for PWM signal generation (CCU6)
- A full-duplex or half-duplex serial interface (UART)
- Synchronous serial channel (SSC)
- Inter-IC (IIC) serial interface
- LED and Touch-sense Controller (LEDTSCU)
- On-chip debug support via single pin DAP interface (SPD)
- Packages:
  - PG-DSO-20
  - PG-TSSOP-16
- Temperature range T_A:
  - SAF (-40 to 85 °C)
  - SAX (-40 to 105 °C)
  - SAK (-40 to 125 °C)

XC822/824 Variant Devices

The XC822/824 product family features devices with different configurations, program memory sizes, packages options and temperature profiles, to offer cost-effective solutions for different application requirements.

The list of XC822/824 device configurations are summarized in **Table 1**. The type of packages available are TSSOP-16 for XC822 and DSO-20 for XC824.

Table 1 Device Configuration

Device Name	MDU Module	LEDTSCU Module
XC822/824	No	No
XC822/824M	Yes	No
XC822/824T	No	Yes
XC822/824MT	Yes	Yes

Table 2 shows the device sales type available, based on above device.

Table 2 Device Profile

Sales Type	Device Type	Program Memory (Kbytes)	Temp-erature Profile (°C)	Package Type	Quality Profile
SAF-XC822T-0FRI	Flash	2	-40 to 85	PG-TSSOP-16	Industrial
SAF-XC822-1FRI	Flash	4	-40 to 85	PG-TSSOP-16	Industrial
SAF-XC822T-1FRI	Flash	4	-40 to 85	PG-TSSOP-16	Industrial
SAF-XC822M-1FRI	Flash	4	-40 to 85	PG-TSSOP-16	Industrial
SAF-XC822MT-1FRI	Flash	4	-40 to 85	PG-TSSOP-16	Industrial
SAF-XC824M-1FGI	Flash	4	-40 to 85	PG-DSO-20	Industrial
SAF-XC824MT-1FGI	Flash	4	-40 to 85	PG-DSO-20	Industrial
SAX-XC824M-1FGI	Flash	4	-40 to 105	PG-DSO-20	Industrial
SAK-XC824M-1FGI	Flash	4	-40 to 125	PG-DSO-20	Industrial
SAF-XC822-1FRA	Flash	4	-40 to 85	PG-TSSOP-16	Automotive
SAF-XC822MT-1FRA	Flash	4	-40 to 85	PG-TSSOP-16	Automotive
SAK-XC822MT-0FRA	Flash	2	-40 to 125	PG-TSSOP-16	Automotive
SAK-XC822-1FRA	Flash	4	-40 to 125	PG-TSSOP-16	Automotive
SAK-XC822MT-1FRA	Flash	4	-40 to 125	PG-TSSOP-16	Automotive

As this document refers to all the derivatives, some description may not apply to a specific product. For simplicity, all versions are referred to by the term XC822/824 throughout this document.

Ordering Information

The ordering code for Infineon Technologies microcontrollers provides an exact reference to the required product. This ordering code identifies:

- The derivative itself, i.e. its function set, the temperature range, and the supply voltage
- The package and the type of delivery

For the available ordering codes for the XC822/824, please refer to your responsible sales representative or your local distributor.

2 General Device Information

Chapter 2 contains the block diagram, pin configurations, definitions and functions of the XC822/824.

2.1 Block Diagram

The block diagram of the XC822/824 is shown in **Figure 2**.

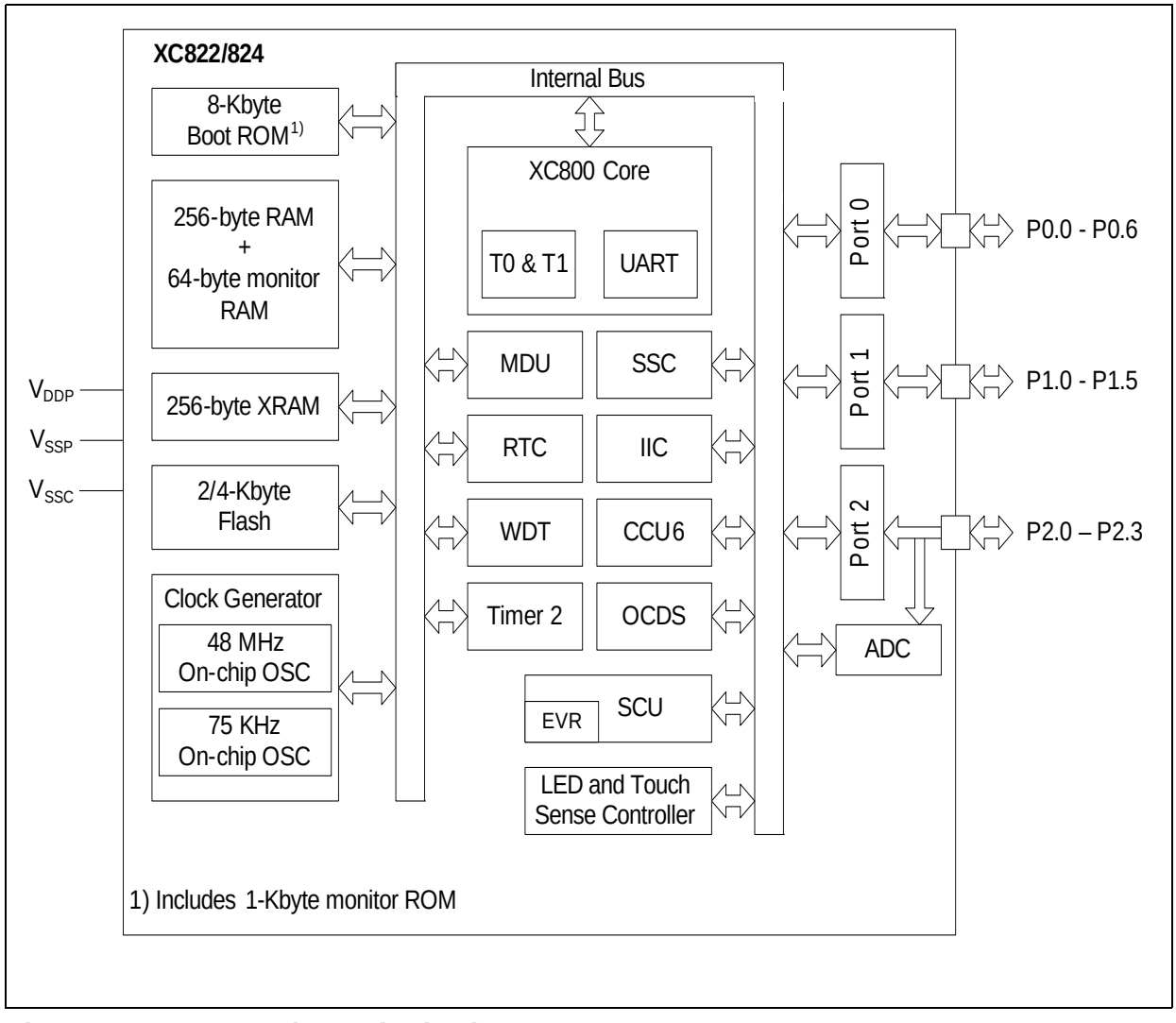

Figure 2 XC822/824 Block Diagram

2.2 Logic Symbol

The logic symbol of the XC822/824 is shown in **Figure 3**.

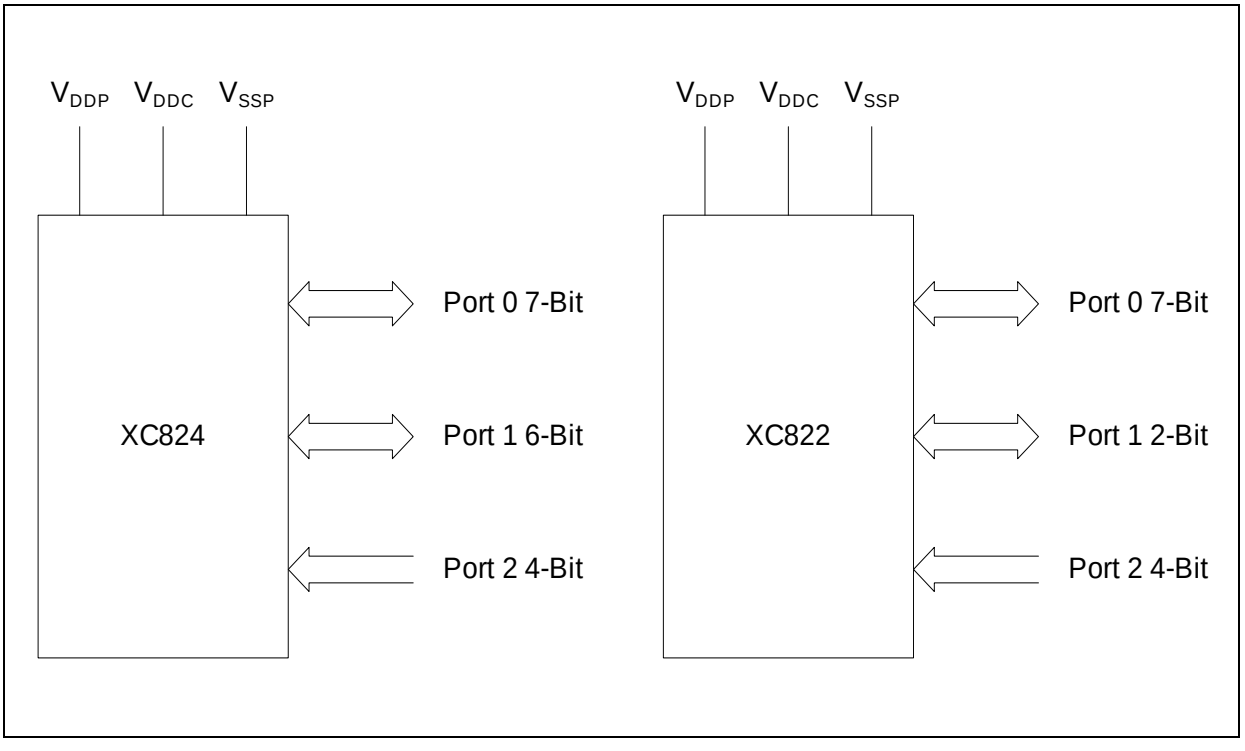

Figure 3 XC822/824 Logic Symbol

2.3 Pin Configuration

The pin configuration of the XC822 in **Figure 4**.

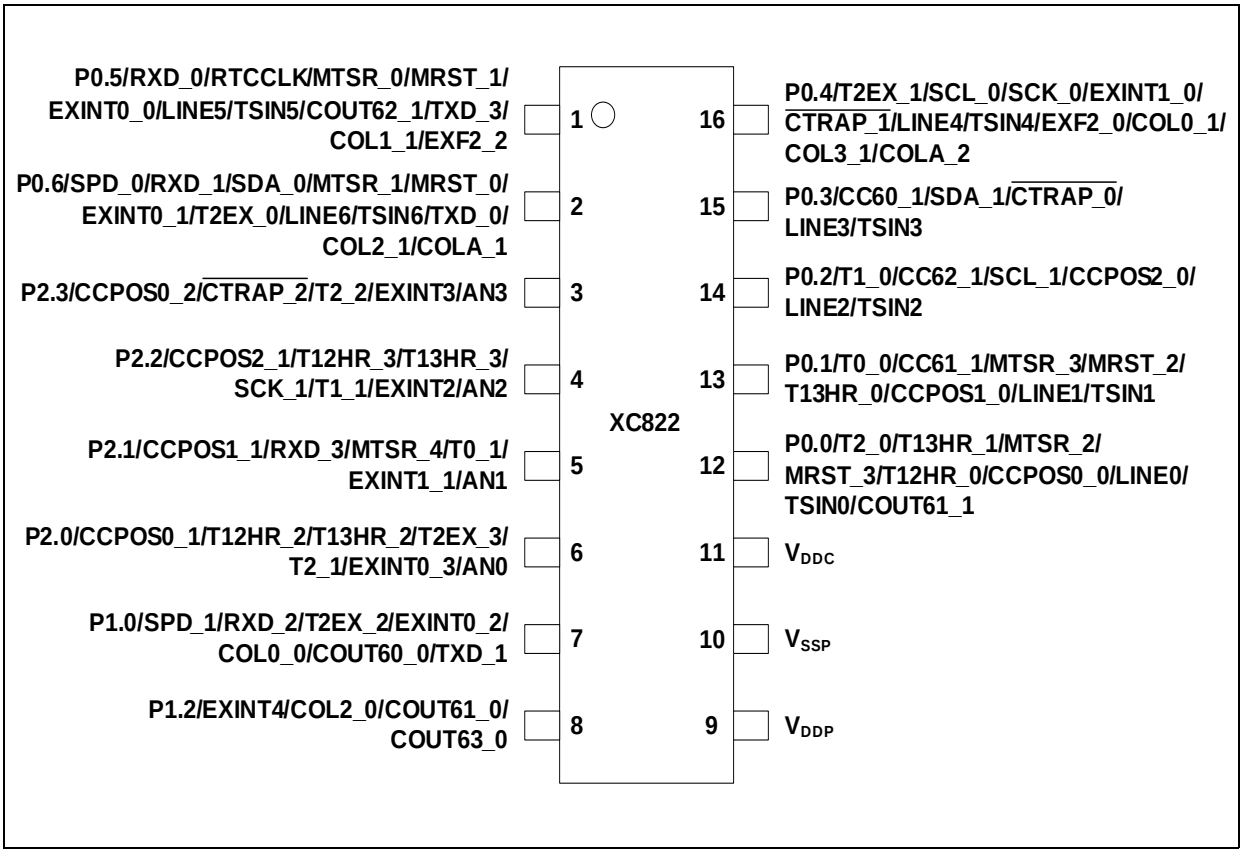

Figure 4 **XC822 Pin Configuration, PG-TSSOP-16 Package** (top view)

The pin configuration of the XC824 in **Figure 5**.

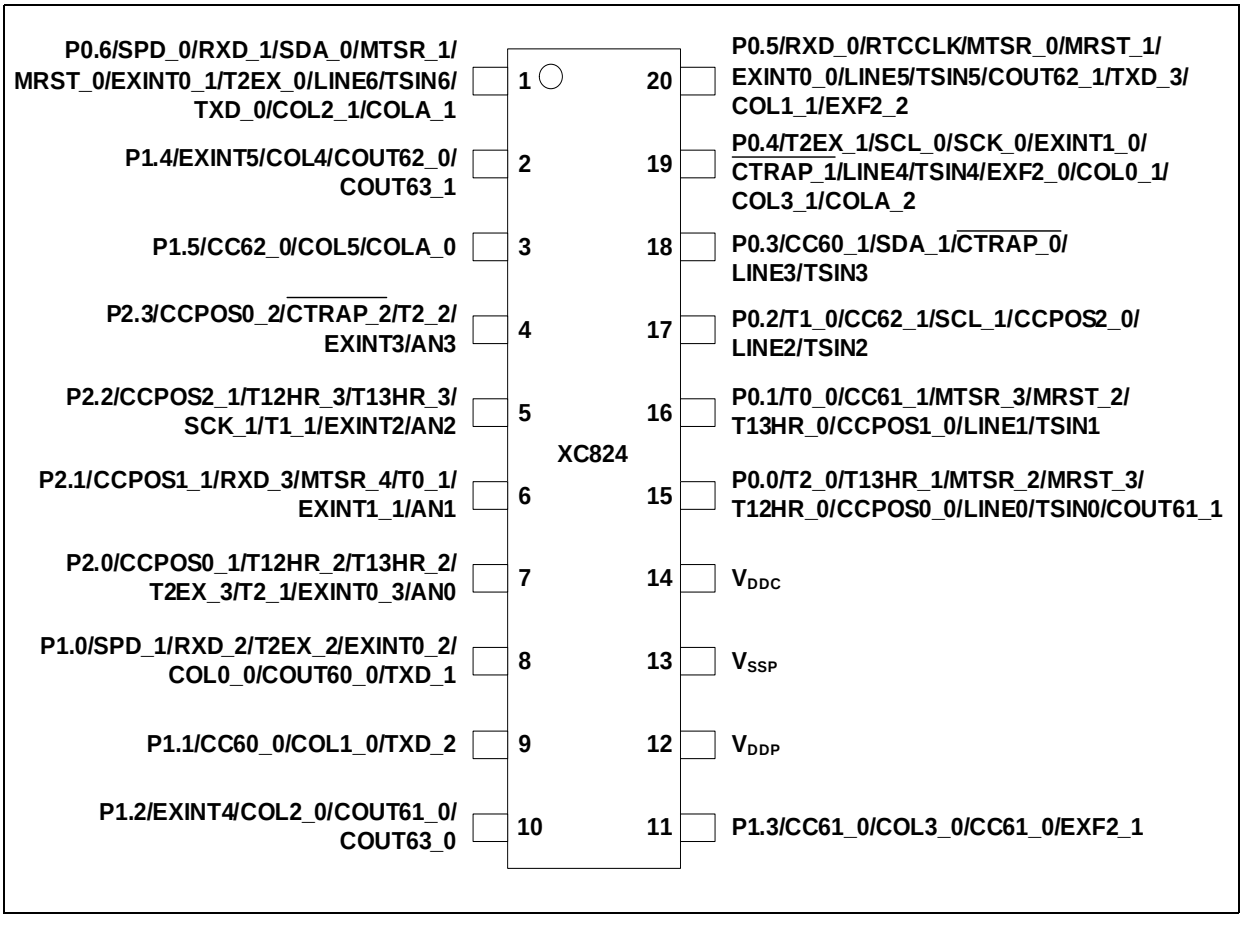

Figure 5 **XC824 Pin Configuration, PG-DSO-20 Package** (top view)

2.4 Pin Definitions and Functions

The functions and default states of the XC822/824 external pins are provided in **Table 3**.

Table 3 Pin Definitions and Functions for XC822/824

Symbol	Pin Number DSO20/ TSSOP16	Type	Reset State	Function	
P0		I/O		**Port 0** Port 0 is a bidirectional general purpose I/O port. It can be used as alternate functions for LEDTSCU, Timer 0, 1 and 2, SSC, CCU6, IIC, SPD and UART.	
P0.0	15/12		Hi-Z	T2_0	Timer 2 Input
				T13HR_1	CCU6 Timer 13 Hardware Run Input
				MTSR_2	SSC Master Transmit Output/ Slave Receive Input
				MRST_3	SSC Master Receive Input
				T12HR_0	CCU6 Timer 12 Hardware Run Input
				CCPOS0_0	CCU6 Hall Input 0
				TSIN0	Touch-sense Input 0
				LINE0	LED Line 0
				COUT61_1	Output of Capture/Compare Channel 1

Table 3 Pin Definitions and Functions for XC822/824

Symbol	Pin Number DSO20/ TSSOP16	Type	Reset State	Function	
P0.1	16/13		Hi-Z	T0_0	Timer 0 Input
				CC61_1	Input/Output of Capture/Compare channel 1
				MTSR_3	SSC Slave Receive Input
				MRST_2	SSC Master Receive Input/ Slave Transmit Output
				T13HR_0	CCU6 Timer 13 Hardware Run Input
				CCPOS1_0	CCU6 Hall Input 1
				TSIN1	Touch-sense Input 1
				LINE1	LED Line 1
P0.2	17/14		Hi-Z	T1_0	Timer 1 Input
				CC62_1	Input/Output of Capture/Compare channel 2
				SCL_1	IIC Clock Line
				CCPOS2_0	CCU6 Hall Input 2
				TSIN2	Touch-sense Input 2
				LINE2	LED Line 2
P0.3	18/15		Hi-Z	CC60_1	Input/Output of Capture/Compare channel 0
				SDA_1	IIC Data Line
				$\overline{\text{CTRAP_0}}$	CCU6 Trap Input
				TSIN3	Touch-sense Input 3
				LINE3	LED Line 3

Table 3 Pin Definitions and Functions for XC822/824

Symbol	Pin Number DSO20/ TSSOP16	Type	Reset State	Function	
P0.4	19/16		PD	T2EX_1	Timer 2 External Trigger Input
				SCK_0	SSC Clock Input/Output
				SCL_0	IIC Clock Line
				$\overline{\text{CTRAP_1}}$	CCU6 Trap Input
				EXINT1_0	External Interrupt Input 1
				TSIN4	Touch-sense Input 4
				LINE4	LED Line 4
				EXF2_0	Timer 2 Overflow Flag
				COL0_1	LED Column 0
				COL3_1	LED Column 3
				COLA_2	LED Column A
P0.5	20/1		Hi-Z	RXD_0	UART Receive Input
				RTCCLK	RTC External Clock Input
				MTSR_0	SSC Master Transmit Output/ Slave Receive Input
				MRST_1	SSC Master Receive Input
				EXINT0_0	External Interrupt Input 0
				TSIN5	Touch-sense Input 5
				LINE5	LED Line 5
				COUT62_1	Output of Capture/Compare Channel 2
				TXD_3	UART Transmit Output/ 2-wire UART BSL Transmit Output
				COL1_1	LED Column 1
				EXF2_2	Timer 2 Overflow Flag

Table 3 Pin Definitions and Functions for XC822/824

Symbol	Pin Number DSO20/ TSSOP16	Type	Reset State	Function	
P0.6	1/2		PU	SPD_0	SPD Input/Output
				RXD_1	UART Receive Input/ UART BSL Receive Input
				SDA_0	IIC Data Line
				MTSR_1	SSC Slave Receive Input
				MRST_0	SSC Master Receive Input/ Slave Transmit Output
				EXINT0_1	External Interrupt Input 0
				T2EX_0	Timer 2 External Trigger Input
				TSIN6	Touch-sense Input 6
				LINE6	LED Line 6
				TXD_0	UART Transmit Output/ 1-wire UART BSL Transmit Output
				COL2_1	LED Column 2
				COLA_1	LED Column A
P1		I/O		**Port 1** Port 1 is a bidirectional general purpose I/O port. It can be used as alternate functions for CCU6, LEDTSCU, SPD, UART and Timer 2.	
P1.0	8/7		Hi-Z	SPD_1	SPD Input/Output
				RXD_2	UART Receive Input
				T2EX_2	Timer 2 External Trigger Input
				EXINT0_2	External Interrupt Input 0
				COL0_0	LED Column 0
				COUT60_0	Output of Capture/Compare Channel 0
				TXD_1	UART Transmit Output

Table 3 Pin Definitions and Functions for XC822/824

Symbol	Pin Number DSO20/ TSSOP16	Type	Reset State	Function	
P1.1	9/-		Hi-Z	CC60_0	Input/Output of Capture/Compare channel 0
				COL1_0	LED Column 1
				TXD_2	UART Transmit Output
P1.2	10/8		Hi-Z	EXINT4	External Interrupt Input 4
				COL2_0	LED Column 2
				COUT61_0	Output of Capture/Compare channel 1
				COUT63_0	Output of Capture/Compare channel 3
P1.3	11/-		Hi-Z	CC61_0	Input/Output of Capture/Compare channel 1
				COL3_0	LED Column 3
				EXF2_1	Timer 2 Overflow Flag
P1.4	2/-		Hi-Z	EXINT5	External Interrupt Input 5
				COL4	LED Column 4
				COUT62_0	Output of Capture/Compare channel 2
				COUT63_1	Output of Capture/Compare channel 3
P1.5	3/-		Hi-Z	CC62_0	Input/Output of Capture/Compare channel 2
				COL5	LED Column 5
				COLA_0	LED Column A
P2		I		**Port 2** Port 2 is a general purpose input-only port. It can be used as inputs for A/D Converter and out of range comparator, CCU6, Timer 2, SSC and UART.	

Table 3 Pin Definitions and Functions for XC822/824

Symbol	Pin Number DSO20/ TSSOP16	Type	Reset State	Function	
P2.0	7/6		Hi-Z	CCPOS0_1	CCU6 Hall Input 0
				T12HR_2	CCU6 Timer 12 Hardware Run Input
				T13HR_2	CCU6 Timer 13 Hardware Run Input
				T2EX_3	Timer 2 External Trigger Input
				T2_1	Timer 2 Input
				EXINT0_3	External Interrupt Input 0
				AN0	Analog Input 0 / Out of range comparator channel 0
P2.1	6/5		Hi-Z	CCPOS1_1	CCU6 Hall Input 1
				RXD_3	UART Receive Input
				MTSR_4	Slave Receive Input
				T0_1	Timer 0 Input
				EXINT1_1	External Interrupt Input 1
				AN1	Analog Input 1 / Out of range comparator channel 1
P2.2	5/4		Hi-Z	CCPOS2_1	CCU6 Hall Input 2
				T12HR_3	CCU6 Timer 12 Hardware Run Input
				T13HR_3	CCU6 Timer 13 Hardware Run Input
				SCK_1	SSC Clock Input/Output
				T1_1	Timer 1 Input
				EXINT2	External Interrupt Input 2
				AN2	Analog Input 2 / Out of range comparator channel 2

Table 3 Pin Definitions and Functions for XC822/824

Symbol	Pin Number DSO20/ TSSOP16	Type	Reset State	Function	
P2.3	4/3		Hi-Z	CCPOS0_2	CCU6 Hall Input 0
				$\overline{\text{CTRAP_2}}$	CCU6 Trap Input
				T2_2	Timer 2 Input
				EXINT3	External Interrupt Input 3
				AN3	Analog Input 3 / Out of range comparator channel 3
V_{DDP}	12/9	–		I/O Port Supply (2.5 V - 5.5 V)	
V_{DDC}	14/11	–		Core Supply Output (2.5 V)	
V_{SSP}/ V_{SSC}	13/10	–		I/O Port Ground/ Core Supply Ground	

2.5 Memory Organization

The XC822/824 CPU operates in the following five address spaces:

- 8 Kbytes of Boot ROM, Library ROM and User routines
- 256 bytes of internal RAM
- 256 bytes of XRAM
  (XRAM can be read/written as program memory or external data memory)
- A 128-byte Special Function Register area
- 2/4 Kbytes of Flash

Figure 6 illustrates the memory address spaces of the 2 Kbyte Flash devices. There are two 1-Kbyte sectors in this device. **Figure 7** illustrates the memory address spaces of the 4 Kbyte Flash devices. This device has two 1-Kbyte sectors, two 512-byte sectors, two 256-byte sectors and four 128-byte sectors. **Figure 8** shows the Flash sectorization for 2 Kbyte and 4 Kbyte Flash devices.

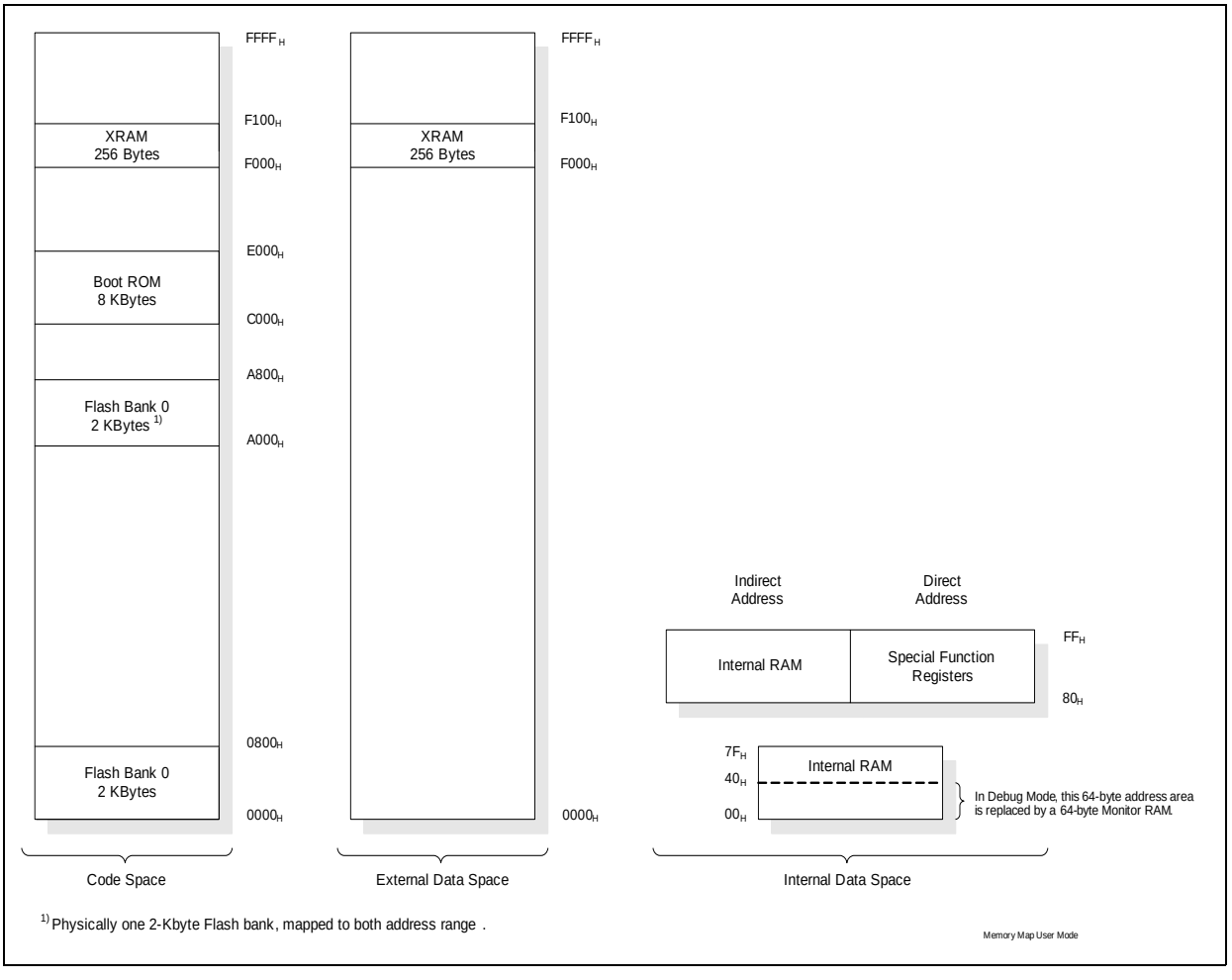

Figure 6 Memory Map of XC822/824 with 2 Kbytes of Flash memory

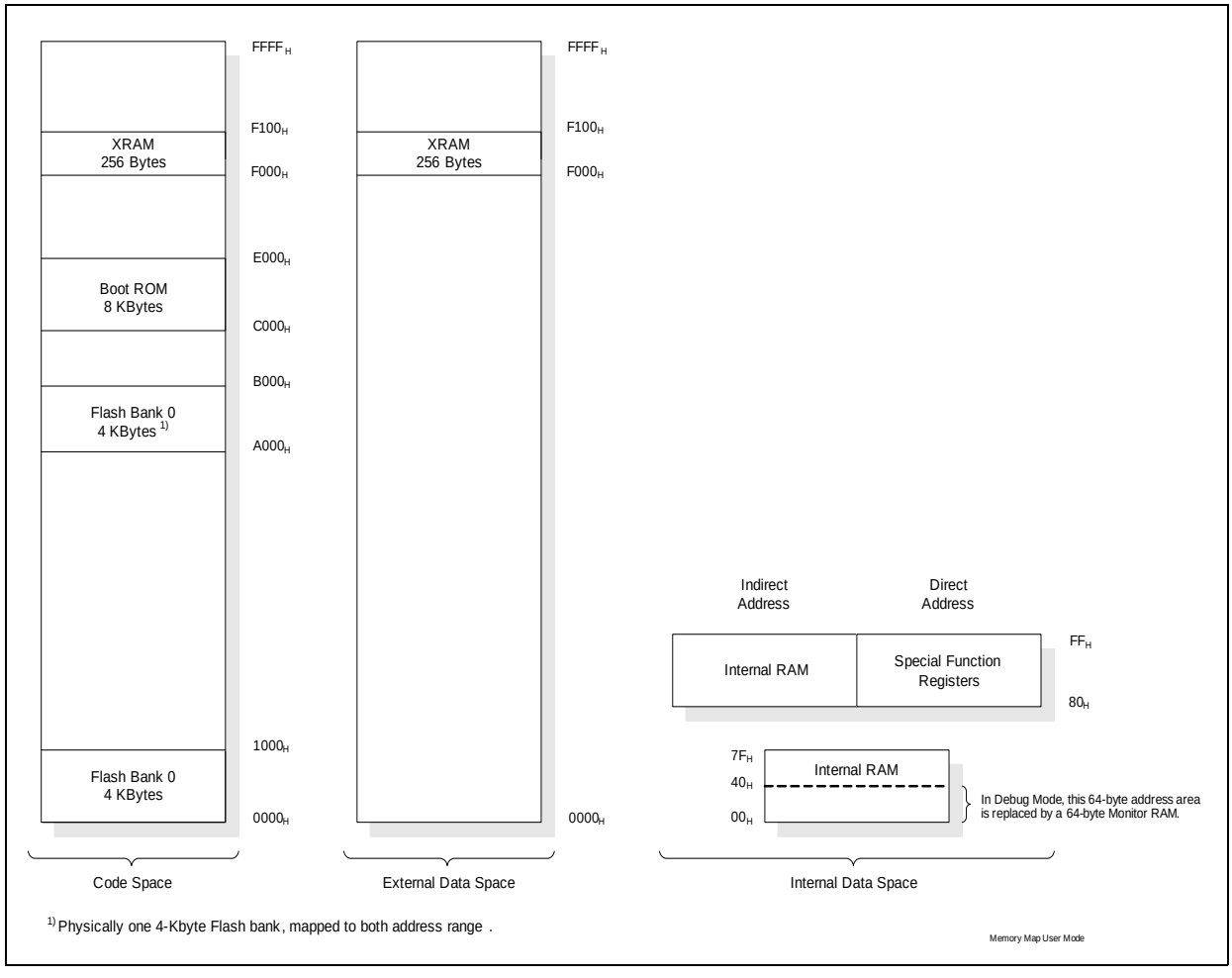

Figure 7 Memory Map of XC822/824 with 4 Kbytes of Flash memory

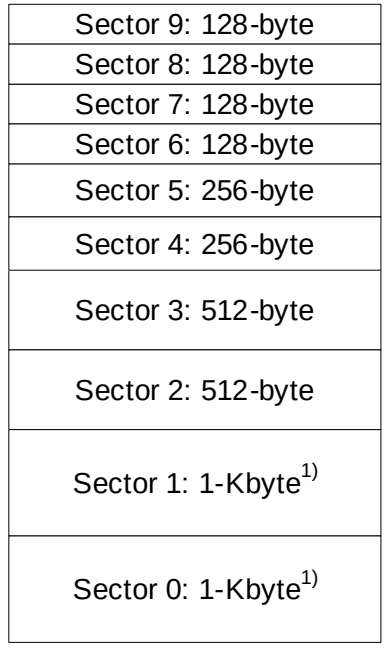

1x Flash Bank

1) 2 Kbyte Flash devices only has sector 0 and sector 1.

Figure 8 Flash Bank Sectorization

2.6 JTAG ID

JTAG ID register is a read-only register located inside the JTAG module, and is used to recognize the device(s) connected to the JTAG interface. Its content is shifted out when INSTRUCTION register contains the IDCODE command (opcode 04_H), and the same is also true immediately after reset.

The JTAG ID register contents for the XC822/824 Flash devices are given in **Table 4**.

Table 4 JTAG ID Summary

Device Type	Device Name	JTAG ID
Flash	XC822/824*	$101B\ C083_H$

Note: The asterisk (*) above denotes all possible device configurations.

2.7 Chip Identification Number

The XC822/824 identity (ID) register is located at Page 1 of address $B3_H$. The value of ID register is 51_H. However, for easy identification of product variants, the Chip Identification Number, which is an unique number assigned to each product variant, is available. The differentiation is based on the product and variant type information.

Two methods are provided to read a device's Chip Identification number:

- In-application subroutine, GET_CHIP_INFO
- Boot-loader (BSL) mode A

Table 5 lists the Chip Identification numbers of XC822/824 device variants.

Table 5 Chip Identification Number

Product Variant	Chip Identification Number
XC822T-0FR	51080343_H
XC822MT-0FR	51080303_H
XC822-1FR	51080163_H
XC822T-1FR	51080143_H
XC822M-1FR	51080123_H
XC822MT-1FR	51080103_H
XC824M-1FG	51080122_H
XC824MT-1FG	51080102_H

3 Electrical Parameters

Chapter 3 provides the characteristics of the electrical parameters which are implementation-specific for the XC822/824.

3.1 General Parameters

The general parameters are described here to aid the users in interpreting the parameters mainly in **Section 3.2** and **Section 3.3**.

3.1.1 Parameter Interpretation

The parameters listed in this section represent partly the characteristics of the XC822/824 and partly its requirements on the system. To aid interpreting the parameters easily when evaluating them for a design, they are indicated by the abbreviations in the “Symbol” column:

- **CC**
  - These parameters indicate **C**ontroller **C**haracteristics, which are distinctive features of the XC822/824 and must be regarded for a system design.
- **SR**
  - These parameters indicate **S**ystem **R**equirements, which must be provided by the microcontroller system in which the XC822/824 is designed in.

3.1.2 Absolute Maximum Rating

Maximum ratings are the extreme limits to which the XC822/824 can be subjected to without permanent damage.

Table 6 Absolute Maximum Rating Parameters

Parameter	Symbol	Limit Values		Unit	Notes
		Min.	Max.		
Ambient temperature	T_A	-40	125	°C	under bias
Storage temperature	T_{ST}	-65	150	°C	–
Junction temperature	T_J	-40	150	°C	under bias
Voltage on power supply pin with respect to V_{SS}	V_{DDP}	-0.5	6	V	
Input current on any pin during overload condition	I_{IN}	-10	10	mA	
Absolute sum of all input currents during overload condition	$\Sigma\|I_{IN}\|$	–	50	mA	

Note: Stresses above those listed under "Absolute Maximum Ratings" may cause permanent damage to the device. This is a stress rating only and functional operation of the device at these or any other conditions above those indicated in the operational sections of this specification is not implied. Exposure to absolute maximum rating conditions for extended periods may affect device reliability. During absolute maximum rating overload conditions ($V_{IN} > V_{DDP}$ or $V_{IN} < V_{SS}$) the voltage on V_{DDP} pin with respect to ground (V_{SS}) must not exceed the values defined by the absolute maximum ratings.

3.1.3 Operating Condition

The following operating conditions must not be exceeded in order to ensure correct operation of the XC822/824. All parameters mentioned in the following tables refer to these operating conditions, unless otherwise noted.

Table 7 Operating Condition Parameters

Parameter	Symbol	Limit Values		Unit	Notes/ Conditions
		Min.	Max.		
Digital power supply voltage	V_{DDP}	3.0	5.5	V	
		2.5	3.0	V	1)
CPU Clock Frequency	f_{CCLK}	22.5	25.6	MHz	typ. 24 MHz
		7.5	8.5	MHz	typ. 8 MHz
Ambient temperature	T_A	-40	85	°C	SAF-XC822/824...
		-40	105	°C	SAX-XC824...
		-40	125	°C	SAK-XC824...

1) In this voltage range, limited operations are available in active mode. Operations in power save modes are fully supported.

3.2 DC Parameters

The electrical characteristics of the DC Parameters are detailed in this section.

3.2.1 Input/Output Characteristics

Table 8 provides the characteristics of the input/output pins of the XC822/XC824.

Table 8 Input/Output Characteristics of XC822/XC824 (Operating Conditions apply)

Parameter	Symbol		Limit Values		Unit	Test Conditions
			Min.	Max.		
Output low voltage on port pins	V_{OLP}	CC	–	1.0	V	I_{OL} = 25 mA (5 V) I_{OL} = 13 mA (3.3 V)
			–	0.4	V	I_{OL} = 10 mA (5 V) I_{OL} = 5 mA (3.3 V)
Output high voltage on port pins	V_{OHP}	CC	V_{DDP} - 1.0	–	V	I_{OH} = -15 mA (5 V) I_{OH} = -8 mA (3.3 V)
			V_{DDP} - 0.4	–	V	I_{OH} = -5 mA (5 V) I_{OH} = -2.5 mA (3.3 V)
Input low voltage on port pins	V_{ILP}	SR	–	0.3 × V_{DDP}	V	CMOS Mode
Input high voltage on port pins	V_{IHP}	SR	0.7 × V_{DDP}	–	V	CMOS Mode
Input Hysteresis[1)]	HYS	CC	0.08 × V_{DDP}	–	V	CMOS Mode (5 V)
			0.03 × V_{DDP}	–	V	CMOS Mode (3.3 V)
			0.01 × V_{DDP}	–	V	CMOS Mode (2.5 V)
Pull-up current on port pins	I_{PUP}	CC	–	-20	µA	$V_{IH,min}$ (5 V)
			-150	–	µA	$V_{IL,max}$ (5 V)
			–	-5	µA	$V_{IH,min}$ (3.3 V)
			-100	–	µA	$V_{IL,max}$ (3.3 V)

Table 8 Input/Output Characteristics of XC822/XC824 (Operating Conditions apply) (cont'd)

Parameter	Symbol		Limit Values		Unit	Test Conditions
			Min.	Max.		
Pull-down current on port pins	I_{PDP}	CC	–	20	µA	$V_{IL,max}$ (5 V)
			150	–	µA	$V_{IH,min}$ (5 V)
			–	5	µA	$V_{IL,max}$ (3.3 V)
			100	–	µA	$V_{IH,min}$ (3.3 V)
Input leakage current on port pins[2)]	I_{OZP}	CC	-1	1	µA	$0 < V_{IN} < V_{DDP}$, $T_A \leq 125$ °C
Overload current on any pin	I_{OVP}	SR	-5	5	mA	[3)]
Absolute sum of overload currents	$\Sigma\|I_{OV}\|$	SR	–	25	mA	[3)]
Voltage on any pin during V_{DDP} power off	V_{PO}	SR	–	0.3	V	[4)]
Maximum current per pin (excluding V_{DDP} and V_{SS})	I_M	SR	-15	25	mA	–
Maximum current into V_{DDP}	I_{MVDDP}	SR	–	80	mA	[3)]
Maximum current out of V_{SS}	I_{MVSS}	SR	–	80	mA	[3)]

1) Not subjected to production test, verified by design/characterization. Hysteresis is implemented to avoid meta stable states and switching due to internal ground bounce. It cannot be guaranteed that it suppresses switching due to external system noise.

2) An additional error current (I_{INJ}) will flow if an overload current flows through an adjacent pin.

3) Not subjected to production test, verified by design/characterization.

4) Not subjected to production test, verified by design/characterization. However, for applications with strict low power-down current requirements, it is mandatory that no active voltage source is supplied at any GPIO pin when V_{DDP} is powered off.

3.2.2 Supply Threshold Characteristics

Table 9 provides the characteristics of the supply threshold in the XC822/824.

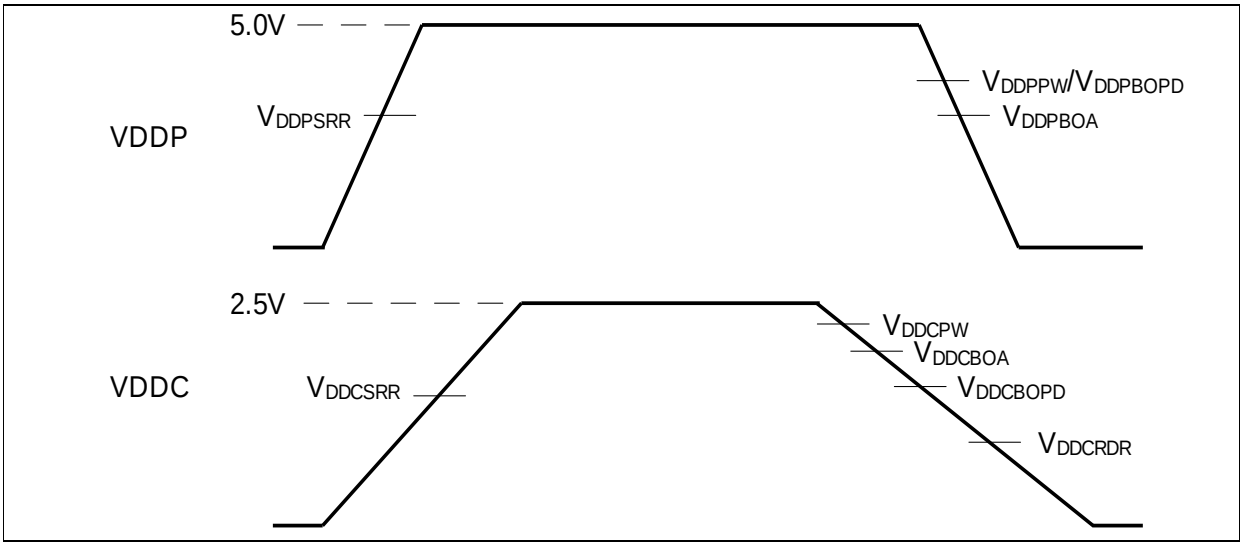

Figure 9 Supply Threshold Parameters

Table 9 Supply Threshold Parameters (Operating Conditions apply)

Parameters	Symbol		Limit Values			Unit
			Min.	Typ.	Max.	
V_{DDP} prewarning voltage[1)2)]	V_{DDPPW}	CC	3.0	3.6	4.5	V
V_{DDP} brownout voltage in active mode[3)2)]	V_{DDPBOA}	CC	2.65	2.75	2.87	V
V_{DDP} brownout voltage in power down mode[2)3)]	$V_{DDPBOPD}$	CC	3.0	3.6	4.5	V
V_{DDP} system reset release voltage[2)4)]	V_{DDPSRR}	CC	2.7	2.8	2.92	V
V_{DDC} prewarning voltage[2)5)]	V_{DDCPW}	CC	2.3	2.4	2.48	V
V_{DDC} brownout voltage in active mode[2)]	V_{DDCBOA}	CC	2.25	2.3	2.42	V
V_{DDC} brownout voltage in power down mode[2)]	$V_{DDCBOPD}$	CC	1.35	1.5	1.95	V
V_{DDC} system reset release voltage[2)4)]	V_{DDCSRR}	CC	2.28	2.3	2.47	V
RAM data retention voltage	V_{DDCRDR}	CC	1.1	–	–	V

1) Detection is enabled via SDCON register in active mode. It is automatically disabled in power down mode. Detection should be disabled for V_{DDP} less than maximum of V_{DDPPW}.
2) This parameter has a hysteresis of 50 mV.
3) Detection is enabled via SDCON register. Detection must be disabled for application with V_{DDP} less than the specified values.
4) V_{DDPSRR} and V_{DDCSRR} must be met before the system reset is released.
5) Detection is enabled via SDCON register in active mode. It is automatically disabled in power down mode.

3.2.3 ADC Characteristics

The values in **Table 10** are given for an analog power supply of 5.0 V. The ADC can be used with an analog power supply down to 3 V. But in this case, analog parameters may show a reduced performances. In the reduced voltage mode (2.5 V < V_{DDP} < 3 V), the ADC is not recommended to be used.

Table 10 ADC Characteristics (Operating Conditions apply; V_{DDP} = 5 V)

Parameter	Symbol		Limit Values			Unit	Test Conditions / Remarks
			Min.	Typ.	Max.		
Analog reference voltage	V_{AREF}		–	V_{DDP}	–	V	Connect internally to V_{DDP}
Analog reference ground	V_{AGND}		–	V_{SSP}	–	V	Connect internally to V_{SSP}
Alternate analog reference ground	$V_{AGNDALT}$	SR	V_{SSP} - 0.1	–	2.5[1)]	V	Connect to AN0 in differential mode, See **Figure 10**.
Internal voltage reference	V_{INTREF}	SR	1.19	1.23	1.28	V	[3)]
Analog input voltage range	V_{AIN}	SR	V_{AGND}	–	V_{AREF}	V	–
ADC clock	f_{ADCI}		8	–	16	MHz	internal analog clock
Sample time	t_S	CC	(2 + INPCR0.STC) × t_{ADCI}			µs	–
Conversion time	t_C	CC	See **Section 3.2.3.1**			µs	–
Total unadjusted error	*TUE*[2)]	CC	–	–	±1	LSB8	8-bit conversion with internal reference[3)]
			–	–	+4/-1	LSB10	10-bit conversion with internal reference[3)4)]
			–	–	+14/-2	LSB12	12-bit conversion using the Low Pass Filter [3)]
Differential Nonlinearity	EA_{DNL}	CC	–	–	+1.5/ -1	LSB	10-bit conversion[3)]

Table 10 ADC Characteristics (Operating Conditions apply; V_{DDP} = 5 V)

Parameter	Symbol		Limit Values			Unit	Test Conditions / Remarks
			Min.	Typ.	Max.		
Integral Nonlinearity	EA_{INL}	CC	–	–	±1.5	LSB	10-bit conversion[3)]
Offset	EA_{OFF}	CC	–	+4	–	LSB	10-bit conversion[3)]
Gain	EA_{GAIN}	CC	–	-4	–	LSB	10-bit conversion[3)]
Switched capacitance at an analog input	C_{AINSW}	CC	–	2	3	pF	[3)5)]
Total capacitance at an analog input	C_{AINT}	CC	–	–	12	pF	[3)5)]
Input resistance of an analog input	R_{AIN}	CC	–	1.5	2	kΩ	[3)]

1) 1.2 V at V_{DDP} = 3.0 V.

2) TUE is tested at V_{AREF} = V_{DDP} = 5.0 V and CPU clock ($f_{SCLK, CCLK}$) = 8 MHz.

3) Not subject to production test, verified by design/characterization.

4) If a reduced positive reference voltage is used, TUE will increase. If the positive reference is reduced by a factor of K, the TUE will increased by 1/K. Example:K = 0.8, 1/K = 1.25; 1.25 X TUE = 2.5 LSB10.

5) The sampling capacity of the conversion C-Network is pre-charged to V_{AREF}/2 before connecting the input to the C-Network. Because of the parasitic elements, the voltage measured at ANx is lower than V_{AREF}/2.

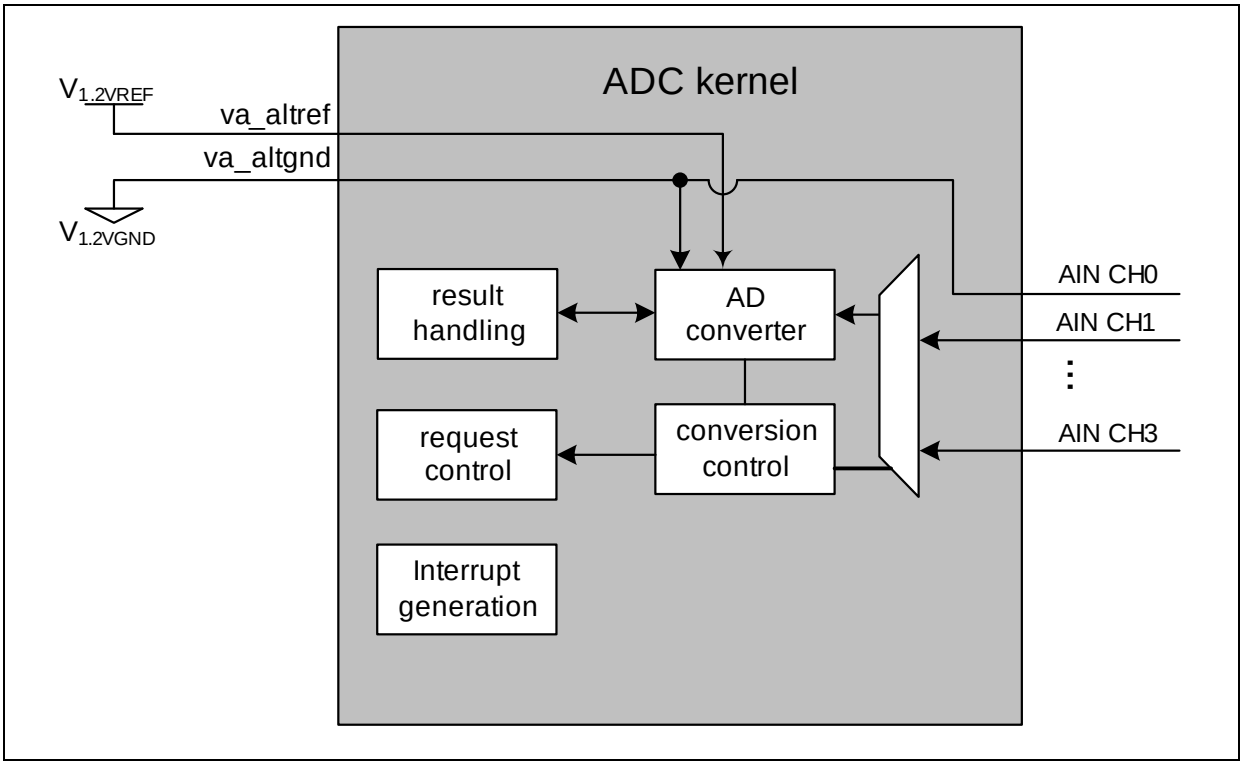

Figure 10 **Differential like measurement with internal 1.2V voltage reference, and CH0 gnd.**

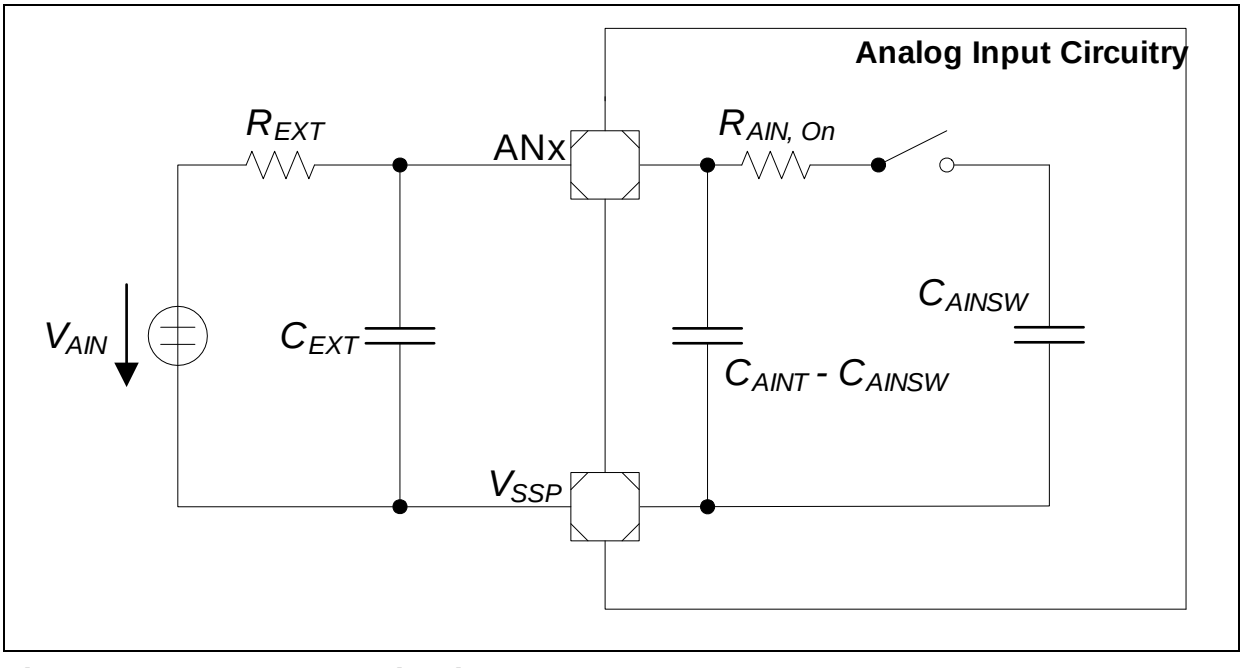

Figure 11 **ADC Input Circuits**

3.2.3.1 ADC Conversion Timing

Conversion time, $t_C = t_{ADC} \times (1 + r \times (3 + n + STC))$, where

- r = CTC + 3,
- CTC = Conversion Time Control (GLOBCTR.CTC),
- STC = Sample Time Control (INPCR0.STC),
- n = 8 or 10 (for 8-bit and 10-bit conversion respectively),
- $t_{ADC} = 1 / f_{ADC}$

3.2.3.2 Out of Range Comparator Characteristics

Table 11 below shows the Out of Range Comparator characteristics.

Table 11 Out of Range Comparator Characteristics (Operating Conditions apply)

Parameter	Symbol		Limit Values			Unit	Remarks
			Min.	Typ.	Max.		
DC Switching Level	$V_{SenseDC}$	SR	60	125	270	mV	Above V_{DDP}
DC Hysteresis	$V_{SenseHys}$	CC	30	–	–	mV	1)
Pulse Width	$t_{SensePW}$	SR	300	–	–	ns	ANx > V_{DDP} 1)
Switching Delay	$t_{SenseSD}$	CC	–	–	400	ns	ANx >= V_{DDP} + 350 mV 1)
Pulse Switching Level	$t_{SensePSL}$	SR	–	250	–	mV	@ 300 nsec 1)
		SR	–	60	–	mV	@ 800 usec 1)

1) Not subject to production test, verified by design/characterization.

3.2.4 Flash Memory Parameters

The XC822/824 is delivered with all Flash sectors erased (read all zeros).

The data retention time of the XC822/824's Flash memory (i.e. the time after which stored data can still be retrieved) depends on the number of times the Flash memory has been erased and programmed.

Note: Flash memory parameters are not subject to production test but verified by design and/or characterization.

Table 12 Flash Timing Parameters (Operating Conditions apply)

Parameter	Symbol		Limit Values			Unit	Remarks
			Min.	Typ.	Max.		
Read access time (per byte)	t_{ACC}	CC	–	125	–	ns	
Programming time (per wordline)	t_{PR}	CC	–	2.2	–	ms	
Erase time (one or more sectors)	t_{ER}	CC	–	120	–	ms	
Flash wait states	$N_{WSFLASH}$	CC	0				CPU clock = 8 MHz
			1				CPU clock = 24 MHz

Table 13 Flash Data Retention and Endurance (Operating Conditions apply)

Retention	Endurance[1)]	Size	Remarks
20 years	1,000 cycles	up to 8 Kbytes	
5 years	10,000 cycles	1 Kbyte	
2 years	70,000 cycles	512 bytes	
2 years	100,000 cycles	128 bytes	

1) One cycle refers to the programming of all wordlines in a sector and erasing of sector. The Flash endurance data specified in **Table 13** is valid only if the following conditions are fulfilled:
- the maximum number of erase cycles per Flash sector must not exceed 100,000 cycles.
- the maximum number of erase cycles per Flash bank must not exceed 300,000 cycles.
- the maximum number of program cycles per Flash bank must not exceed 2,500,000 cycles.

Table 14 Emulated Flash Data Retention and Endurance based on EEPROM Emulation ROM Library (Operating Conditions apply)[1)]

Retention	Endurance[2)]	Emulation Size	Remarks
2 years	1,600,000 cycles	31 bytes	
2 years	1,400,000 cycles	62 bytes	
2 years	1,200,000 cycles	93 bytes	
2 years	1,000,000 cycles	124 bytes	

1) EEPROM Emulation ROM Library can only be used in the 4 Kbyte Flash variant.

2) These values show the maximum endurance. Maximum endurance is the maximum possible unique data write if each data update is only 31 bytes. Minimum endurance cycle is the maximum possible unique data write if each data update is the same as the emulation size. The minimum endurance cycle can be calculated using the formulae [(max. endurance)*(31)/(emulation size)].

3.2.5 Power Supply Current

Table 15 provides the characteristics of the power supply current in the XC822/824.

Table 15 Power Consumption Parameters[1) 2)](Operating Conditions apply)

Parameter	Symbol	Limit Values		Unit	Test Condition
		Typ.	Max.		
Active Mode	I_{DDPA}	21	25	mA	5 V / 3.3 V [3)]
		14	18	mA	5 V / 3.3 V [4)]
		–	5	mA	2.5 V[5)]
Idle Mode	I_{DDPI}	16	20	mA	5 V / 3.3 V [6)]
		–	5	mA	2.5 V [5)]
Power Down Mode 1	I_{PDP1}	3	5	µA	T_A = 25 °C[7)]
		–	28	µA	T_A = 85 °C[7)8)9)]
Power Down Mode 2	I_{PDP2}	5	7	µA	T_A = 25 °C[7)]
		–	30	µA	T_A = 85 °C[7)8)]

1) The typical values are measured at T_A = + 25 °C and V_{DDP} = 5 V and 3.3 V.
2) The maximum values are measured under worst case conditions (T_A = + 125 °C and V_{DDC} = 5 V) unless stated otherwise.
3) I_{DDPA} (active mode) is measured with: CPU clock and input clock to all peripherals running at 24 MHz (CLKMODE=0).
4) I_{DDPA} (active mode) is measured with: CPU clock and input clock to all peripherals running at 8 MHz (CLKMODE=1).
5) This value is based on the maximum load capacity of EVR during V_{DDP} = 2.5 V. Not subject to production test, verified by design/characterisation.
6) I_{DDPI} (idle mode) is measured with: CPU clock disabled, watchdog timer disabled, input clock to all peripherals enabled and running at 24 MHz (CLKMODE=0).
7) I_{PDP1} and I_{PDP2} is measured at 5 V and 3.3 V with: wake-up port is programmed to be input with either internal pull devices enabled or driven externally to ensure no floating inputs.
8) Not subject to production test, verified by design/characterisation.
9) I_{PDP1} and I_{PDP2} has a maximum values of 100 uA at T_A = + 125 °C.

Table 16 shows the maximum active current within the device in the reduced voltage condition of 2.5 V < V_{DDP} < 3.0 V. The active current consumption needs to be below the specified values as according to the V_{DDP} voltage. If the conditions are not met, a brownout reset may be triggered.

Table 16 Active Current Consumption in Reduced Voltage Condition

V_{DDP}	2.5 V	2.6 V	2.7 V	2.8 V
Maximum active current	7 mA	13 mA	20 mA	25 mA

Table 17 provides the active current consumption of some modules operating at 8 MHz active mode, 3 V power supply at 25 °C. The typical values shown are used as a reference guide for device operating in reduced voltage conditions.

Table 17 Typical Active Current Consumption[1) 2)]

Active Current Consumption	Symbol	Limit Values	Unit	Test Condition
		Typ.		
Baseload current[3)]	I_{CPUDDC}	5850	µA	Modules including Core, memories, UART, T0, T1 and EVR. Disable ADC analog (GLOBCTR.ANON = 0).
ADC[4)]	I_{ADCDDC}	3390	µA	Set PMCON1.ADC_DIS to 0 and GLOBECTR. ANON to 1
SSC[5)]	I_{SSCDDC}	460	µA	Set PMCON1.SSC_DIS to 0
CCU6[6)]	$I_{CCU6DDC}$	3320	µA	Set PMCON1.CCU_DIS to 0
Timer 2[7)]	I_{T2DDC}	200	µA	Set PMCON1.T2_DIS to 0
MDU[8)]	I_{MDUDDC}	1260	µA	Set PMCON1.MDU_DIS to 0
LEDTSCU[9)]	I_{LEDDDC}	520	µA	Set PMCON1.LTS_DIS to 0
IIC[10)]	I_{IICDDC}	580	µA	Set PMCON1.IIC_DIS to 0

1) Modules that are controllable by programming the register PMCON1.
2) Not subject to production test, verified by design/characterisation.
3) Baseload current is measured when the device is running in user mode with an endless loop in the flash memory. All modules in register PMCON1 are disabled.
4) ADC active current is measured with: module enable, ADC analog clock at 8MHz, running in parallel conversion request in autoscan mode for 4 channels
5) SSC active curremt is measured with: module enabled, running in loop back mode at a baud rate of 1 MBaud
6) CCU6 active current is measured with: module enabled, all timers running in 8 MHz, 6 PWM outputs are generated.
7) Timer 2 active current is measured with: module enabled, timer running in 8 MHz
8) MDU active current is measured with: module enabled, division operation was performed.

9) LEDTSCU active curent is measured with: module enabled, counter running in 8 MHz.
10) IIC active current is measured with: module enabled, performing a master transmit with the master clock running at 400 KHz.

3.3 AC Parameters

The electrical characteristics of the AC Parameters are detailed in this section.

3.3.1 Testing Waveforms

The testing waveforms for rise/fall time, output delay and output high impedance are shown in **Figure 12**, **Figure 13** and **Figure 14**.

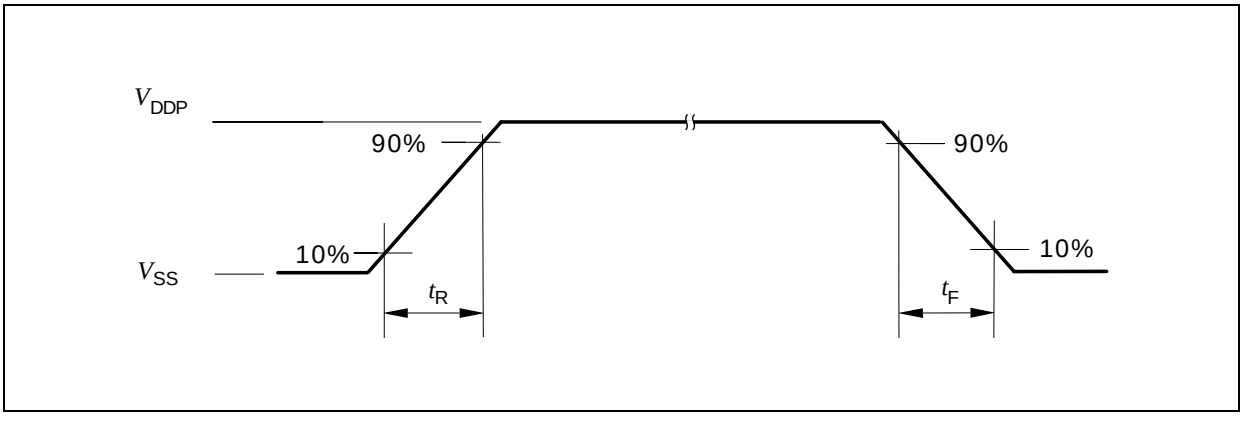

Figure 12 Rise/Fall Time Parameters

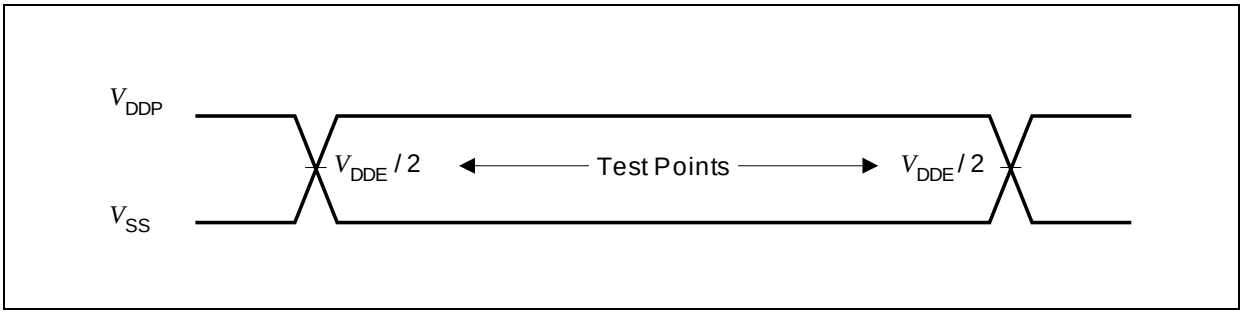

Figure 13 Testing Waveform, Output Delay

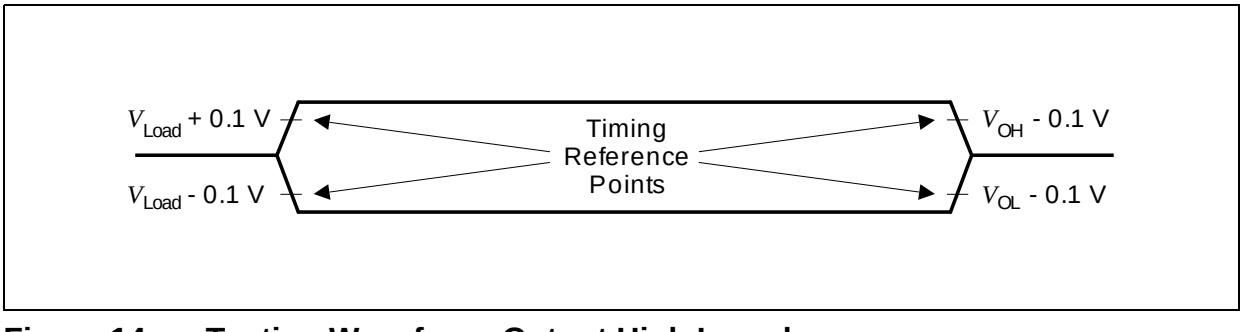

Figure 14 Testing Waveform, Output High Impedance

3.3.2 Output Rise/Fall Times

Table 18 provides the characteristics of the output rise/fall times in the XC822/824.

Table 18 Output Rise/Fall Times Parameters (Operating Conditions apply)

Parameter	Symbol	Limit Values		Unit	Test Conditions
		Min.	Max.		
Rise/fall times on Standard Pad[1)2)]	t_R, t_F	–	10	ns	20 pF[3)4)] (5 V & 3.3 V).

1) Rise/Fall time parameters are taken with 10% - 90% of supply.
2) Not all parameters are 100% tested, but are verified by design/characterisation and test correlation.
3) Additional rise/fall time valid for C_L = 20 pF - C_L = 100 pF @ 0.125 ns/pF at 5 V supply voltage.
4) Additional rise/fall time valid for C_L = 20 pF - C_L = 100 pF.@ 0.225 ns/pF at 3.3 V supply voltage.

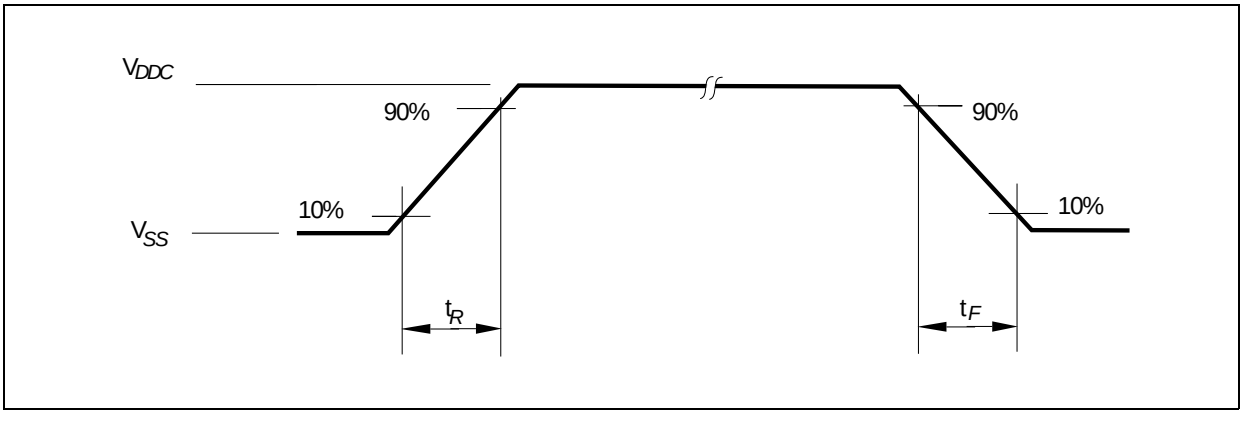

Figure 15 Rise/Fall Times Parameters

3.3.3 Oscillator Timing and Wake-up Timing

Table 19 provides the characteristics of the power-on reset, PLL and Wake-up timings in the XC822/824.

Table 19 Power-On Reset Wake-up Timing[1] (Operating Conditions apply)

Parameter	Symbol		Limit Values			Unit	Test Conditions
			Min.	Typ.	Max.		
48 MHz Oscillator start-up time	$t_{48MOSCST}$	CC	–	–	13	µs	
75 KHz Oscillator start-up time	$t_{75KOSCST}$	CC	–	–	800	µs	
Flash initialization time	t_{FINT}	CC	–	160	–	µs	

1) Not subject to production test, verified by design/characterisation.

3.3.4 On-Chip Oscillator Characteristics

Table 20 provides the characteristics of the 48 MHz oscillator in the XC822/824.

Table 20 48 MHz Oscillator Characteristics (Operating Conditions apply)

Parameter	Symbol		Limit Values			Unit	Test Conditions
			Min.	Typ.	Max.		
Nominal frequency	f_{NOM}	CC	-0.5 %	48	+0.5%	MHz	under nominal conditions[1] after trimming
Long term frequency deviation	Δf_{LT}	CC	-2.0	–	3.0	%	with respect to f_{NOM}, over lifetime and temperature (0 °C to 85 °C)
			-4.5	–	4.5	%	with respect to f_{NOM}, over lifetime and temperature (-40 °C to 125 °C)
Short term frequency deviation (over core supply voltage[2])	Δf_{ST}	CC	-1	–	1	%	with respect to f_{NOM}, within one LIN message (< 10 ms … 100 ms)

1) Nominal condition: V_{DDC} = 2.5 V, T_A = + 25°C.

2) Core voltage supply, V_{DDC} = 2.5 V ± 7.5%.

Table 21 provides the characteristics of the 75 kHz oscillator in the XC822/824.

Table 21 75 kHz Oscillator Characteristics (Operating Conditions apply)

Parameter	Symbol		Limit Values			Unit	Test Conditions
			Min.	Typ.	Max.		
Nominal frequency	f_{NOM}	CC	-1%	75	+1%	KHz	under nominal conditions[1] after trimming
Long term frequency deviation	Δf_{LT}	CC	-4.5	–	4.5	%	with respect to f_{NOM}, over lifetime and temperature (-40 °C to 125 °C)
Short term frequency deviation	Δf_{ST}	CC	-1.5	–	1.5	%	with respect to f_{NOM}, over core supply voltage of 2.5 V ± 7.5%

1) Nominal condition: V_{DDC} = 2.5 V, T_A = + 25°C.

3.3.5 SSC Timing

3.3.5.1 SSC Master Mode Timing

Table 22 provides the SSC master mode timing in the XC822/824.

Table 22 SSC Master Mode Timing[1] (Operating Conditions apply; CL = 50 pF)

Parameter	Symbol		Limit Values		Unit
			Min.	Max.	
SCLK clock period	t_0	CC	2 * T_{SSC}[2]	–	ns
MTSR delay from SCLK	t_1	CC	0	6	ns
MRST setup to SCLK	t_2	SR	20	–	ns
MRST hold from SCLK	t_3	SR	0	–	ns

1) Not subject to production test, verified by design/characterisation.

2) $T_{SSCmin} = T_{CPU} = 1/f_{CPU}$. When f_{CPU} = 24 MHz, t_0 = 83.3 ns. T_{CPU} is the CPU clock period.

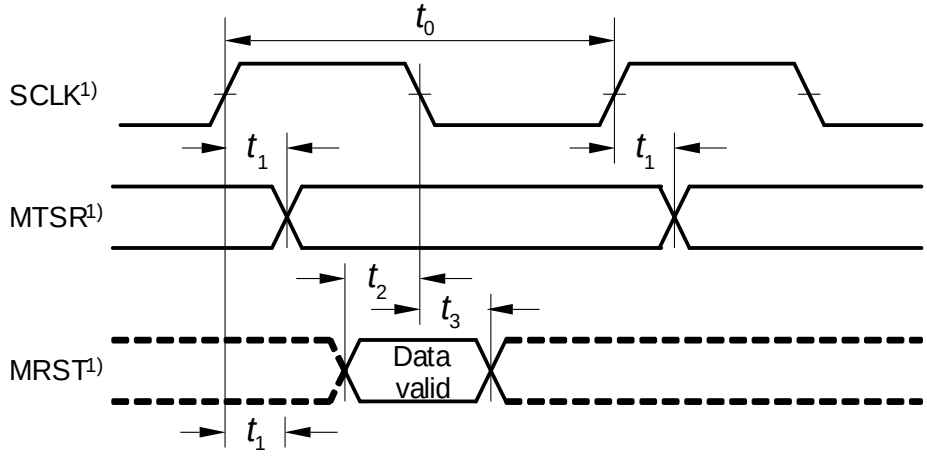

1) This timing is based on the following setup: CON.PH = CON.PO = 0.

SSC_Tmg1

Figure 16 SSC Master Mode Timing

3.3.5.2 SSC Slave Mode Timing

Table 23 provides the SSC slave mode timing in the XC822/824.

Table 23 SSC Slave Mode Timing[1] (Operating Conditions apply; CL = 50 pF)

Parameter	Symbol		Limit Values		Unit
			Min.	Max.	
SCLK clock period	t_0	SR	4 * T_{SSC}[2]	–	ns
MRST delay from SCLK ↑	t_1	CC	0	20	ns
MTSR setup to SCLK ↓	t_2	SR	46	–	ns
MTSR hold from SCLK ↓	t_3	SR	0	–	ns

1) Not subject to production test, verified by design/characterisation.

2) $T_{SSCmin} = T_{CPU} = 1/f_{CPU}$. When f_{CPU} = 24 MHz, t_0 = 166.7 ns. T_{CPU} is the CPU clock period.

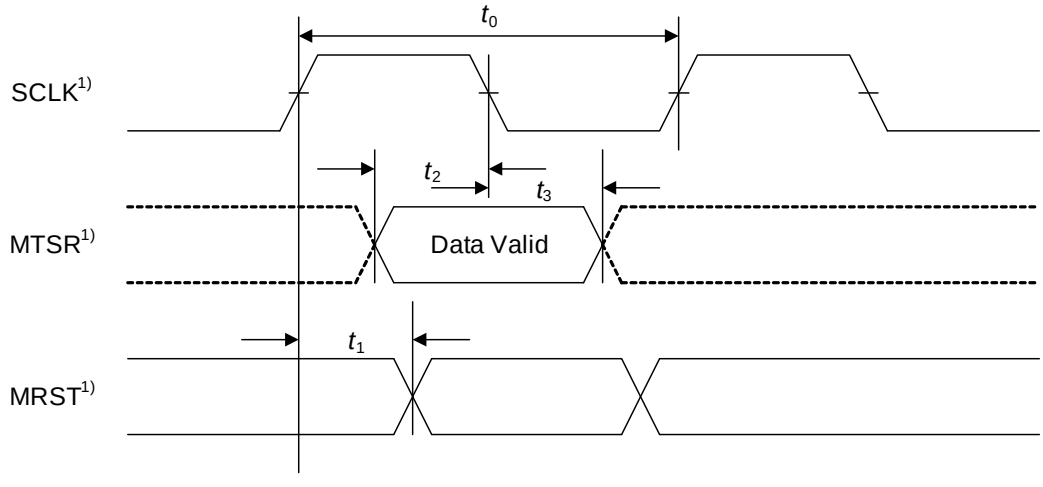

[1] This timing is based on the following setup : CON.PH = CON.PO = 0.

Figure 17 SSC Slave Mode Timing

3.3.6 SPD Timing

The SPD interface will work with standard SPD tools having a sample/output clock frequency deviation of +/- 5% or less. For further details please refer to application note AP24004 in section SPD Timing Requirements.

Note: These parameters are no subject to product test but verified by design and/or characterization.

Note: Operating Conditions apply.

4 Package and Quality Declaration

Chapter 4 provides the information of the XC822/824 package and reliability section.

4.1 Package Parameters

Table 24 provides the thermal characteristics of the packages used in XC822 and XC824 respectively.

Table 24 Thermal Characteristics of the Packages

Parameter	Symbol		Limit Values		Unit	Package Types
			Min.	Max.		
Thermal resistance junction case[1)]	R_{TJC}	CC	-	36.2	K/W	PG-TSSOP-16-1
			-	34.3	K/W	PG-DSO-20-45
Thermal resistance junction lead[1)]	R_{TJL}	CC	-	356.6	K/W	PG-TSSOP-16-1
			-	36.2	K/W	PG-DSO-20-45

1) The thermal resistances between the case and the ambient (R_{TCA}) , the lead and the ambient (R_{TLA}) are to be combined with the thermal resistances between the junction and the case (R_{TJC}), the junction and the lead (R_{TJL}) given above, in order to calculate the total thermal resistance between the junction and the ambient (R_{TJA}). The thermal resistances between the case and the ambient (R_{TCA}), the lead and the ambient (R_{TLA}) depend on the external system (PCB, case) characteristics, and are under user responsibility.
The junction temperature can be calculated using the following equation: $T_J=T_A+R_{TJA} \times P_D$, where the R_{TJA} is the total thermal resistance between the junction and the ambient. This total junction ambient resistance R_{TJA} can be obtained from the upper four partial thermal resistances, by
a) simply adding only the two thermal resistances (junction lead and lead ambient), or
b) by taking all four resistances into account, depending on the precision needed.

4.2 Package Outline

Figure 18 and **Figure 19** shows the package outlines of the XC822 (TSSOP-16) and XC824 (DSO-20) devices respectively.

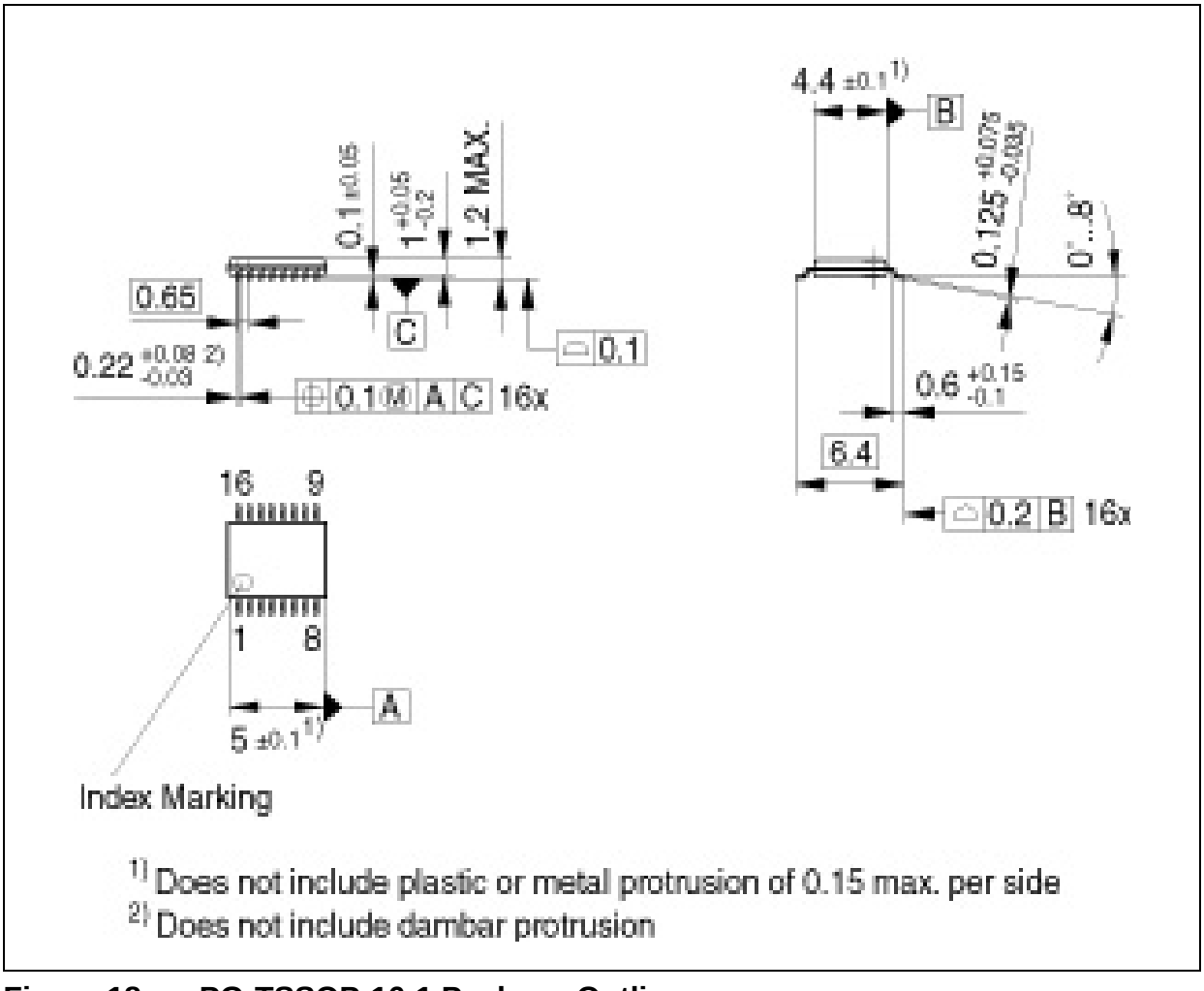

Figure 18 PG-TSSOP-16-1 Package Outline

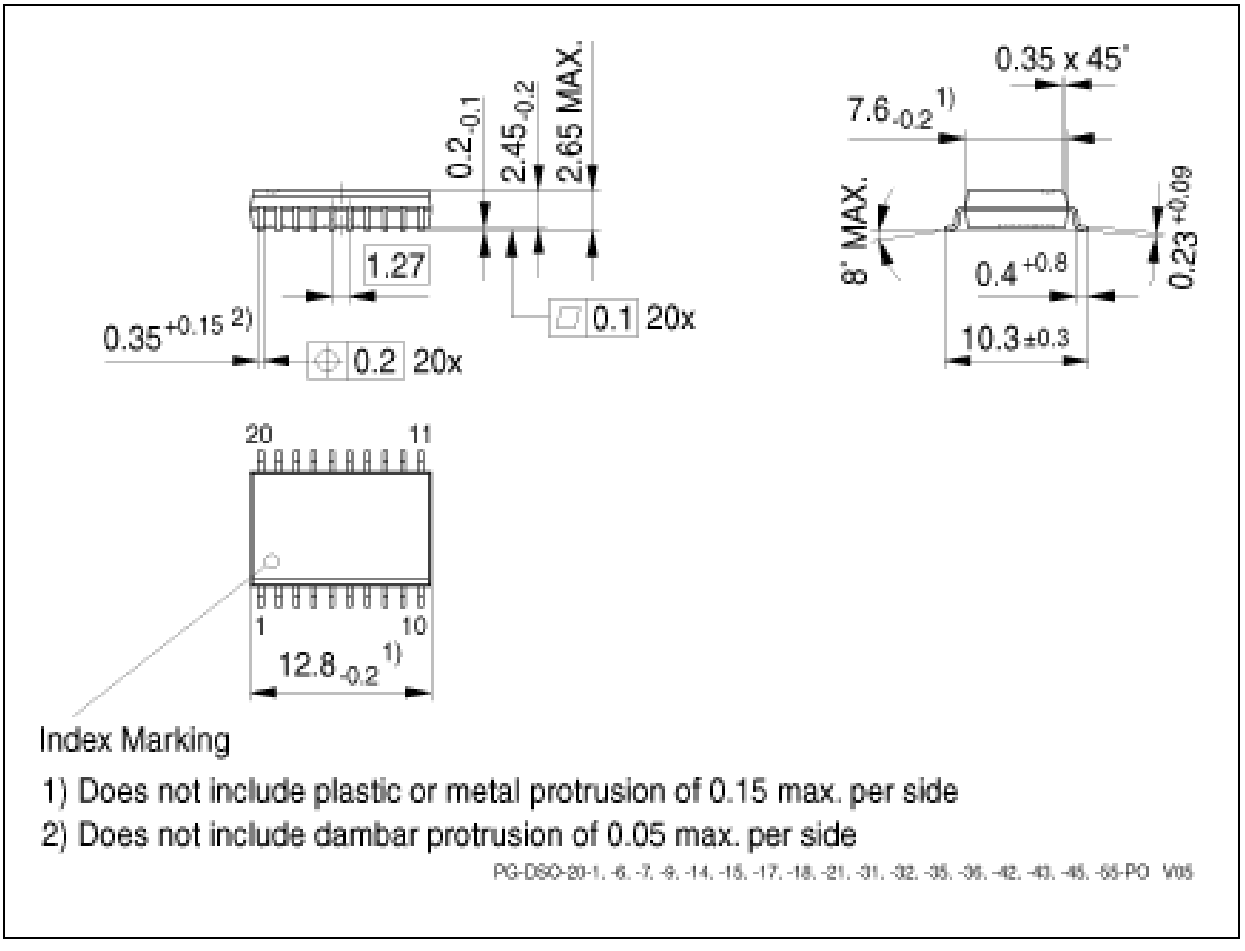

Figure 19 PG-DSO-20-45 Package Outline

4.3 Quality Declaration

Table 25 shows the characteristics of the quality parameters in the XC822/824.

Table 25 Quality Parameters

Parameter	Symbol	Limit Values		Unit	Notes
		Min.	Max.		
Operation Lifetime when the device is used at the three stated T_J[1)]	t_{OP1}	-	1500	hours	T_J = 150°C
		-	15000	hours	T_J = 110°C
		-	1500	hours	T_J = -40°C
Operation Lifetime when the device is used at the stated T_J[1)]	t_{OP2}	-	131400	hours	T_J = 27°C
ESD susceptibility according to Human Body Model (HBM)	V_{HBM}	-	2000	V	Conforming to EIA/JESD22-A114-B
ESD susceptibility according to Charged Device Model (CDM) pins	V_{CDM}	-	500	V	Conforming to JESD22-C101-C

1) This lifetime refers only to the time when device is powered-on.

w w w . i n f i n e o n . c o m

Published by Infineon Technologies AG

ООО «ЛайфЭлектроникс» “LifeElectronics” LLC

ИНН 7805602321 КПП 780501001 Р/С 40702810122510004610 ФАКБ "АБСОЛЮТ БАНК" (ЗАО) в г.Санкт-Петербурге К/С 30101810900000000703 БИК 044030703

Компания «Life Electronics» занимается поставками электронных компонентов импортного и отечественного производства от производителей и со складов крупных дистрибьюторов Европы, Америки и Азии.

С конца 2013 года компания активно расширяет линейку поставок компонентов по направлению коаксиальный кабель, кварцевые генераторы и конденсаторы (керамические, пленочные, электролитические), за счёт заключения дистрибьюторских договоров

Мы предлагаем:

- *Конкурентоспособные цены и скидки постоянным клиентам.*
- *Специальные условия для постоянных клиентов.*
- *Подбор аналогов.*
- *Поставку компонентов в любых объемах, удовлетворяющих вашим потребностям.*

- *Приемлемые сроки поставки, возможна ускоренная поставка.*
- *Доставку товара в любую точку России и стран СНГ.*
- *Комплексную поставку.*
- *Работу по проектам и поставку образцов.*
- *Формирование склада под заказчика.*

- *Сертификаты соответствия на поставляемую продукцию (по желанию клиента).*
- *Тестирование поставляемой продукции.*
- *Поставку компонентов, требующих военную и космическую приемку.*
- *Входной контроль качества.*
- *Наличие сертификата ISO.*

В составе нашей компании организован Конструкторский отдел, призванный помогать разработчикам, и инженерам.

Конструкторский отдел помогает осуществить:

- *Регистрацию проекта у производителя компонентов.*
- *Техническую поддержку проекта.*
- *Защиту от снятия компонента с производства.*
- *Оценку стоимости проекта по компонентам.*
- *Изготовление тестовой платы монтаж и пусконаладочные работы.*

Тел: +7 (812) 336 43 04 (многоканальный)
Email: org@lifeelectronics.ru

www.lifeelectronics.ru