Honeywell

MICRO SWITCH™ Watertight Miniature Basic Switches

V15W Series

Datasheet

MICRO SWITCH™ V15W Series Watertight Miniature Basic Switches

Honeywell MICRO SWITCH™ V15W Series miniature, sealed basic switches feature industrial-grade performance (IP-rated sealing and 10 A electrical rating). These redesigned and upgraded switches are cost-effective solutions for a variety of applications.

The V15W switch with sealed plunger and sealed wire leads conforms to the IP67 environmental seal rating (temporary submersion). The IP67 seal rating is designed for indoor and outdoor applications on commercial appliances, industrial equipment, surface transportation, and agriculture equipment where the switch could be exposed to liquid or particulate contaminants.

In addition, the V15W Series is designed to control logic level/computer based circuits or electrical circuits up to 10 A. Electrical connectivity for the switch is achieved via combination quick connect/solder terminals or sealed wire leads. A wide variety of levers for the V15W Series are available to enhance the application flexibility of the switch package.

The V15W Series is further enhanced with certification from CQC (Asia-Pacific), ENEC (Europe), UL and cUL (Americas) agencies for global applications.

What makes our switches better?

- Watertight. Dust tight. Leaded versions are sealed to IP67
- High current capacity: this V-sized sealed switch is rated up to 10 A!
- Many different switch characteristics, actuators, and terminations resulting in thousands of potential configurations
- Product performance matched to customer design expectations

VALUE • CUSTOMIZATION • RELIABLE
ENVIRONMENTAL PROTECTION • FLEXIBLE

Features and Benefits

EXCELS IN DUSTY, DIRTY, WET CONDITIONS

Silicone rubber plunger seal and epoxy resin assure the V15W Series delivers high sealing capability with an **IP67 rating on all pre-leaded switches** that makes them a great choice for wet, dirty, and/or dusty application settings.

V-sized sealed switch rated to 10 A!

HANDLES LOW VOLTAGE AND POWER-DUTY LOADS WITH EASE

MICRO SWITCH™ V15W Series basic switches are available with a choice of **silver alloy or gold-plated silver alloy contacts** to easily control low-voltage logic level applications. The silver alloy contacts are designed for controlling power-duty ac or dc circuits.

REDUCES INSTALLATION TIME

Offered with pre-leaded 300 mm wire, the V15W Series can reduce and simplify installation.

DESIGN FLEXIBILITY

Available with pin plungers, stainless steel levers, three types of terminations, and a variety of switch characteristics to meet an assortment of equipment requirements, MICRO SWITCH™ V15W Series switches also boast electrical ratings from 0.1 A up to 10 A for design flexibility in one package size.

WORLDWIDE USE

The V15W Series is certified to UL, cUL (North America), CQC (Asia-Pacific), and ENEC (Europe) for world-wide applications.

Potential Applications

FOOD PACKAGING PLANTS

Performs a variety of position and counting functions

ATV AND OFF-ROAD VEHICLES

Often used in brake light assemblies, brake position detection, handle bar controls, run-away prevention, shift lever position, and marine controls

GARBAGE AND SALT TRUCKS, COMMERCIAL BUSES, VANS

Operates in a variety of functions, including lift position, door ajar/open, salt spreader on/off detection, and wheel chair lifts (sense position of movable platforms)

VENDING MACHINES

Aids with product selection, liquid dispensing on/off position, and product delivery detection

GOLF CARTS

Determines foot pedal position and initiates reverse alarm on shift lever

MEDICAL EQUIPMENT

Often used on hospital bed controls, dental chairs, foot pedals, and pneumatic switches

FORKLIFT AND RIDING LAWN MOWER SEATS

Senses operator presence or absence and shifter position

MICRO SWITCH™ Watertight Miniature Basic Switches

PRODUCT NOMENCLATURE

V15W — D Z 200 A 02 — A W1

Switch Type

MICRO SWITCH™ V-Basic Standard **V15W** Watertight Switch

Terminals/Wiring

D	4,8 mm x 0,8 mm
E	4,8 mm x 0,5 mm
W	300 mm long wires[1]
S	Special

[1] Electrical rating and wire type (standard)
W1: 24 AWG (0,20 mm²)
W2: 18 AWG (0,82 mm²)
W3: 16 AWG (1,31 mm²)

Circuitry

Z	SPDT
P	SPNO
C	SPNC

Operating Force

050	50 g max.
100	100 g max.
150	150 g max.
200	200 g max.[2]
300	300 g max.[2]

[2] 200 g and 300 g operate forces are the only forces allowed with the W3 electrical rating.

Lever Location

	No lever
A	Lever pivot far from plunger
B	Lever pivot near plunger

Lever Type

	Pin plunger
01	Short straight lever
02	Standard straight lever
03	Long straight lever
04	Simulated roller lever
05	Roller lever
06	Long roller lever
99	Special

Mounting Holes

	Metric (Ø 3,1 mm)
K	USA (Ø 2,9 mm)

Contact Material

	Standard silver alloy
A	Gold-plated silver alloy

Electrical Rating (must be included)

W1	0.1 A, 125/250 Vac 0.1 A, 30 Vdc
W2	6 A, 125/250 Vac 5 A, 30 Vdc
W3	10 A, 125/250 Vac[2] 5 A, 30 Vdc[2]

Special Designator

A special designator code is used to indicate some non-standard feature such as a special actuator, wire color, wire length, connector, etc. Review product specification to determine the nature of the non-standard feature. This code will consist of up to three alphanumeric characters. A blank designates no difference from standard listing.

Not all combinations of model code are available.
Please contact your Honeywell provider/representative for assistance.

Table 1. Specifications

Characteristic	Parameter
Circuitry	SPDT, SPNO, SPNC
Operating force	50 gf, 100 gf, 150 gf, 200 gf, 300 gf
Termination	quick connect: 4,8 mm x 0,8 mm quick connect: 4,8 mm x 0,5 mm 300 mm lead wire length
Actuators (levers 300 series stainless steel)	pin plunger, short straight lever, standard straight lever, long straight lever, simulated roller lever, roller lever, long roller lever
Agency certification	UL, cUL, ENEC, CQC
Sealing	IP67 (leaded versions) IP00 (quick-connect versions due to exposed terminal)
Plunger sealing	silicone
Operating temperature	-40 °C to 85 °C [-40 °F to 185 °F]
Mechanical life (cycles)	1,000,000 cycles min. @ 180 cycles/minute max.
Dielectric strength	500 Vac (RMS) for 1 minute leakage current ≤ 0.5 mA between open contacts
Switch resistance (initial)	300 mΩ max.
Insulation resistance	100 MΩ min. (500 Vdc for 1 minute)
Contact material	silver alloy, gold-plated silver alloy
Housing material	PBT thermoplastic polyester

Table 2. Electrical Ratings

Switch option	cUL, UL per 61058-1, File 12252	CQC per GB15092-1, ENEC per 61058-1
W1	0.1 RA (Resistive Amp) 125/250 Vac 0.1 RA 30 Vdc	0.1 A 125/250 Vac 0.1 A 30 Vdc
W2	6 RA (Resistive Amp) 125/250 Vac 5 RA 30 Vdc	6 A 125/250 Vac 5 A 30 Vdc
W3	10 RA (Resistive Amp) 125/250 Vac 5 RA 30 Vdc	10 A 125/250 Vac 5 A 30 Vdc

Note: cUL, UL, ENEC, and CQC use temperature is 55 °C max. for wired versions, 85 °C max. for terminal versions.

V15W Series

O.F. • Operating force
R.F. • Release force
P.T. • Pretravel
O.T. • Overtravel
D.T. • Differential travel
O.P. • Operating position

PRODUCT SPECIFICATIONS AND LISTINGS

Contact your Honeywell rep or distributor for additional listings

	Catalog Listing	Elec. Rating (see page 5)	Termination	Circuitry/ Contacts	O.F. max. newtons [grams]	O.P. nominal	P.T. max.	O.T. min.	D.T. max.
Pin plunger	**V15W-DZ200-AW1**	W1	QC: 4,8 mm x 0,8 mm	SPDT/ gold-plated	1,96 [200]	14,7 mm [0.578 in]	1,2 mm [0.05 in]	1,0 mm [0.04 in]	0,4 mm [0.015 in]
	V15W-DZ200-W2	W2	QC: 4,8 mm x 0,8 mm	SPDT/ silver alloy	1,96 [200]	14,7 mm [0.578 in]	1,2 mm [0.05 in]	1,0 mm [0.04 in]	0,4 mm [0.015 in]
	V15W-DZ200-W3	W3	QC: 4,8 mm x 0,8 mm	SPDT/ silver alloy	1,96 [200]	14,7 mm [0.578 in]	1,2 mm [0.05 in]	1,0 mm [0.04 in]	0,4 mm [0.015 in]
	V15W-EZ200-W3	W3	QC: 4,8 mm x 0,5 mm	SPDT/ silver alloy	1,96 [200]	14,7 mm [0.578 in]	1,2 mm [0.05 in]	1,0 mm [0.04 in]	0,4 mm [0.015 in]
	V15W-WC200-AW1	W1	300 mm wire leads	SPNC/ gold-plated	1,96 [200]	14,7 mm [0.578 in]	1,2 mm [0.05 in]	1,0 mm [0.04 in]	0,4 mm [0.015 in]
	V15W-WP200-W2	W2	300 mm wire leads	SPDT/ silver alloy	1,96 [200]	14,7 mm [0.578 in]	1,2 mm [0.05 in]	1,0 mm [0.04 in]	0,4 mm [0.015 in]
	V15W-WZ200-W3	W3	300 mm wire leads	SPDT/ silver alloy	1,96 [200]	14,7 mm [0.578 in]	1,2 mm [0.05 in]	1,0 mm [0.04 in]	0,4 mm [0.015 in]
Short straight lever	**V15W-DZ100A01-AW1**	W1	QC: 4,8 mm x 0,8 mm	SPDT/ gold-plated	0,83 [85]	15,1 mm [0.59 in]	2,6 mm [0.10 in]	1,1 mm [0.04 in]	0,6 mm [0.024 in]
Standard straight lever	**V15W-DZ200A02-AW1**	W1	QC: 4,8 mm x 0,8 mm	SPDT/ gold-plated	1,08 [110]	14,8 mm [0.582 in]	4,0 mm [0.16 in]	1,5 mm [0.06 in]	0,9 mm [0.035 in]
	V15W-DZ200A02-W2	W2	QC: 4,8 mm x 0,8 mm	SPDT/ silver alloy	1,08 [110]	14,8 mm [0.582 in]	4,0 mm [0.16 in]	1,5 mm [0.06 in]	0,9 mm [0.035 in]
	V15W-WZ200A02-AW1	W1	300 mm wire leads	SPDT/ gold-plated	1,08 [110]	14,8 mm [0.582 in]	4,0 mm [0.16 in]	1,5 mm [0.06 in]	0,9 mm [0.035 in]
	V15W-WZ200A02-W2	W2	300 mm wire leads	SPDT/ silver alloy	1,08 [110]	14,8 mm [0.582 in]	4,0 mm [0.16 in]	1,5 mm [0.06 in]	0,9 mm [0.035 in]
Long straight lever	**V15W-WC050A03-W2**	W2	300 mm wire leads	SPNC/ silver alloy	0,20 [20]	13,4 mm [0.53 in]	7,0 mm [0.28 in]	2,6 mm [0.10 in]	2,0 mm [0.08 in]
Simulated roller lever	**V15W-DZ200A04-W2**	W2	QC: 4,8 mm x 0,8 mm	SPDT/ silver alloy	1,22 [125]	18,1 mm [0.71 in]	3,6 mm [0.14 in]	1,7 mm [0.07 in]	1,0 mm [0.04 in]
	V15W-WZ050B04-W2	W2	300 mm wire leads	SPDT/ silver alloy	0,20 [20]	17,6 mm [0.69 in]	7,2 mm [0.28 in]	2,1 mm [0.08 in]	1,7 mm [0.07 in]
	V15W-WZ200A04-W2	W2	300 mm wire leads	SPDT/ silver alloy	1,22 [125]	18,1 mm [0.71 in]	3,6 mm [0.14 in]	1,7 mm [0.07 in]	1,0 mm [0.04 in]
	V15W-WZ200A04-W3	W3	300 mm wire leads	SPDT/ silver alloy	1,22 [125]	18,1 mm [0.71 in]	3,6 mm [0.14 in]	1,7 mm [0.07 in]	1,0 mm [0.04 in]
Roller lever	**V15W-DZ200A05-AW1**	W1	QC: 4,8 mm x 0,8 mm	SPDT/ gold-plated	1,96 [200]	20,6 mm [0.81 in]	2,1 mm [0.08 in]	1,0 mm [0.04 in]	0,5 mm [0.02 in]
	V15W-WZ200A05-AW1	W1	300 mm wire leads	SPDT/ gold-plated	1,96 [200]	20,6 mm [0.81 in]	2,1 mm [0.08 in]	1,0 mm [0.04 in]	0,5 mm [0.02 in]
	V15W-WZ200A05-W2	W2	300 mm wire leads	SPDT/ silver alloy	1,96 [200]	20,6 mm [0.81 in]	2,1 mm [0.08 in]	1,0 mm [0.04 in]	0,5 mm [0.02 in]

MICRO SWITCH™ Watertight Miniature Basic Switches

O.F. • Operating force
R.F. • Release force
P.T. • Pretravel
O.T. • Overtravel
D.T. • Differential travel
O.P. • Operating position

PRODUCT SPECIFICATIONS AND LISTINGS

Contact your Honeywell rep or distributor for additional listings

	Catalog Listing	Elec. Rating (see page 5)	Termination	Circuitry/ Contacts	O.F. max. newtons [grams]	O.P. nominal	P.T. max.	O.T. min.	D.T. max.
Long roller lever	**V15W-DZ200A06-AW1**	W1	QC: 4,8 mm x 0,8 mm	SPDT/ gold-plated	1,27 [130]	20,4 mm [0.80 in]	3,3 mm [0.13 in]	1,3 mm [0.05 in]	0,7 mm [0.03 in]
	V15W-DZ200A06-W2	W2	QC: 4,8 mm x 0,8 mm	SPDT/ silver alloy	1,27 [130]	20,4 mm [0.80 in]	3,3 mm [0.13 in]	1,3 mm [0.05 in]	0,7 mm [0.03 in]
	V15W-WP200A06-W2	W2	300 mm wire leads	SPNO/ silver alloy	1,27 [130]	20,4 mm [0.80 in]	3,3 mm [0.13 in]	1,3 mm [0.05 in]	0,7 mm [0.03 in]
	V15W-WZ200A06-AW1	W1	300 mm wire leads	SPDT/ gold-plated	1,27 [130]	20,4 mm [0.80 in]	3,3 mm [0.13 in	1,3 mm [0.05 in]	0,7 mm [0.03 in]
	V15W-WZ200A06-W2	W2	300 mm wire leads	SPDT/ silver alloy	1,27 [130]	20,4 mm [0.80 in]	3,3 mm [0.13 in]	1,3 mm [0.05 in]	0,7 mm [0.03 in]

V15W Series

MOUNTING DIMENSIONS

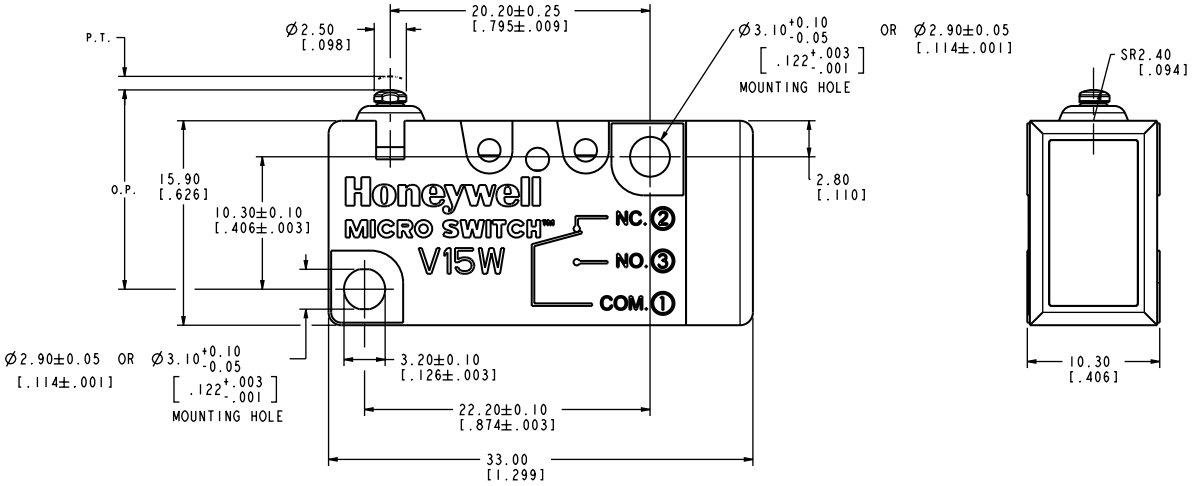

TERMINATION OPTION DIMENSIONS

Termination Type "D"

QC: 4,8 mm x 0,8 mm

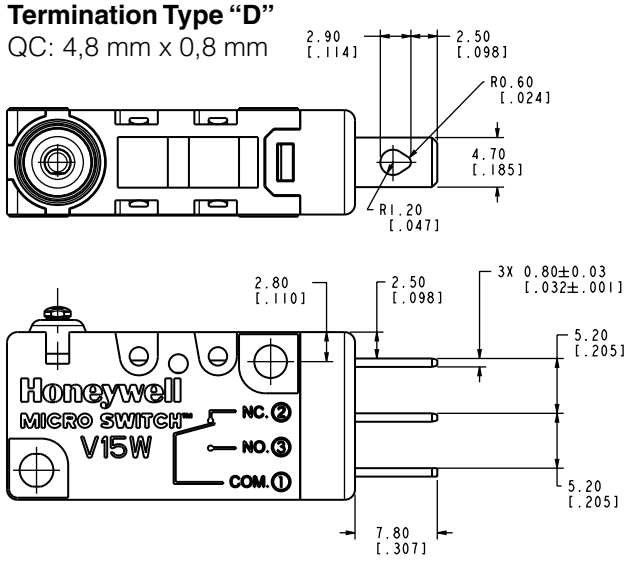

Termination Type "E"

QC: 4,8 mm x 0,5 mm

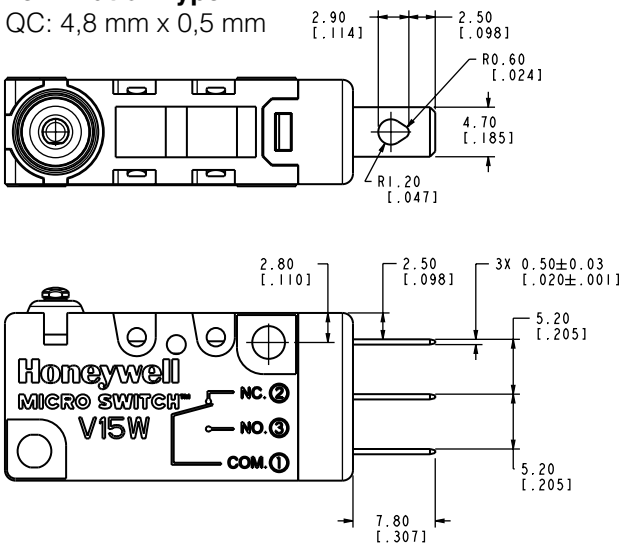

Termination Type "W"

300 mm long wires

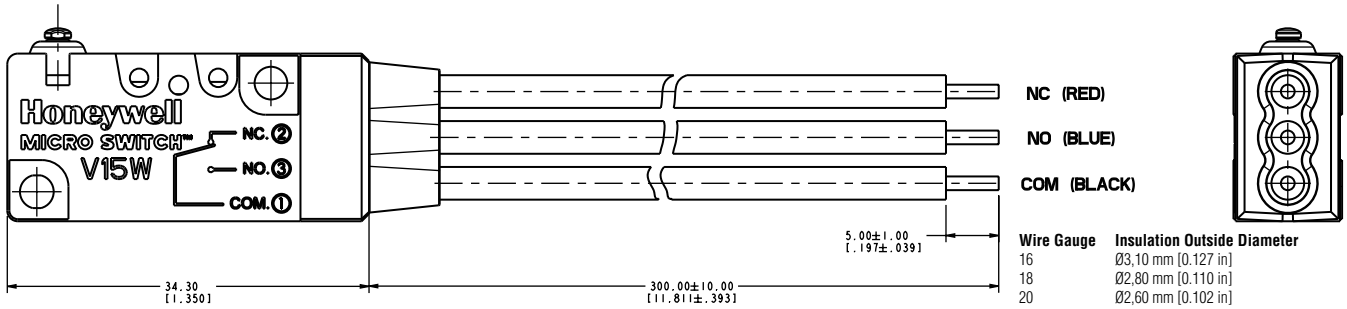

Wire Gauge	Insulation Outside Diameter
16	Ø3,10 mm [0.127 in]
18	Ø2,80 mm [0.110 in]
20	Ø2,60 mm [0.102 in]
22	Ø2,40 mm [0.094 in]
24	Ø2,20 mm [0.086 in]
26	Ø2,08 mm [0.081 in]

MICRO SWITCH™ Watertight Miniature Basic Switches

STANDARD LEVER DIMENSIONS

Lever Type "01"
Short Straight Lever

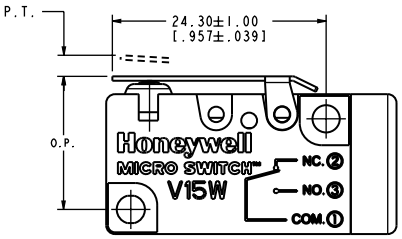

Lever Type "02"
Standard Straight Lever

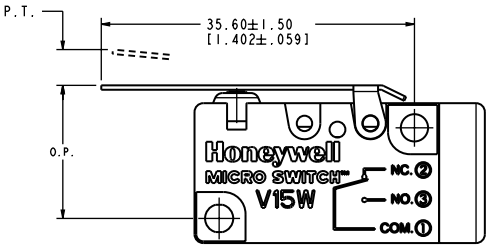

Lever Type "03"
Long Straight Lever

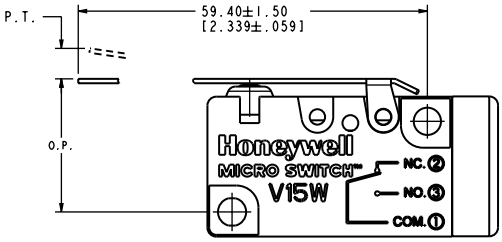

Lever Type "04"
Simulated Roller Lever

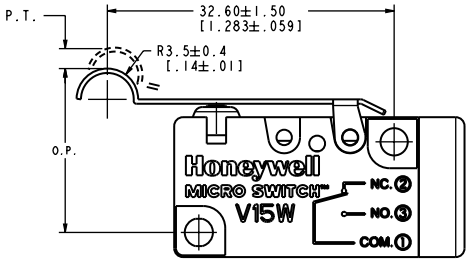

Lever Type "05" "06"
ROLLER LEVER DIMENSIONS

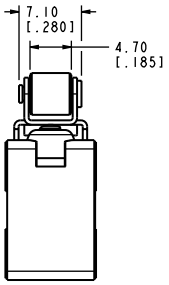

Lever Type "05"
Roller Lever

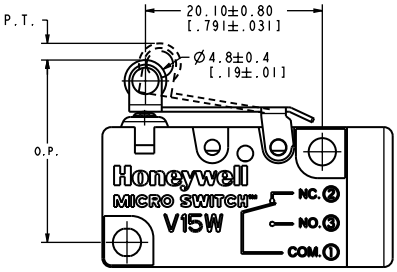

Lever Type "06"
Long Roller Lever

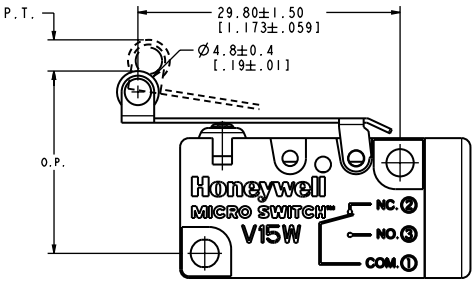

This Honeywell datasheet supports the following MICRO SWITCH™ V15W Series Basic Switch Listings

V15W-DZ100A01-AW1
V15W-DZ200A02-AW1
V15W-DZ200A02-W2
V15W-DZ200A04-W2
V15W-DZ200A05-AW1
V15W-DZ200A06-AW1
V15W-DZ200A06-W2
V15W-DZ200-AW1
V15W-DZ200-W2
V15W-DZ200-W3
V15W-EZ200-W3
V15W-WC050A03-W2
V15W-WC200-AW1
V15W-WP200A06-W2
V15W-WP200-W2
V15W-WZ050B04-W2
V15W-WZ200A02-AW1
V15W-WZ200A02-W2
V15W-WZ200A04-W2
V15W-WZ200A04-W3
V15W-WZ200A05-AW1
V15W-WZ200A05-W2
V15W-WZ200A06-AW1
V15W-WZ200A06-W2
V15W-WZ200-W3

ADDITIONAL INFORMATION

The following associated literature is available on the Honeywell web site at sensing.honeywell.com:

- Product installation instructions
- Product range guide
- Product nomenclature tree
- Product application-specific information
  - Application note: Watertight switches in transportation applications
  - Application note: Sensors and switches in oil rig applications
  - Application note: Sensors and switches for potential medical applications
  - Brochure: Sensors and switches for potential medical applications
  - Technical bulletin: Applying precision switches
  - Technical bulletin: Low energy switch guide

⚠ WARNING

PERSONAL INJURY

DO NOT USE these products as safety or emergency stop devices or in any other application where failure of the product could result in personal injury.

Failure to comply with these instructions could result in death or serious injury.

⚠ WARNING

MISUSE OF DOCUMENTATION

- The information presented in this product sheet is for reference only. Do not use this document as a product installation guide.
- Complete installation, operation, and maintenance information is provided in the instructions supplied with each product.

Failure to comply with these instructions could result in death or serious injury.

WARRANTY/REMEDY

Honeywell warrants goods of its manufacture as being free of defective materials and faulty workmanship. Honeywell's standard product warranty applies unless agreed to otherwise by Honeywell in writing; please refer to your order acknowledgement or consult your local sales office for specific warranty details. If warranted goods are returned to Honeywell during the period of coverage, Honeywell will repair or replace, at its option, without charge those items it finds defective. **The foregoing is buyer's sole remedy and is in lieu of all other warranties, expressed or implied, including those of merchantability and fitness for a particular purpose. In no event shall Honeywell be liable for consequential, special, or indirect damages.**

While we provide application assistance personally, through our literature and the Honeywell website, it is up to the customer to determine the suitability of the product in the application.

Specifications may change without notice. The information we supply is believed to be accurate and reliable as of this printing. However, we assume no responsibility for its use.

Find out more

Honeywell serves its customers through a worldwide network of sales offices, representatives and distributors. For application assistance, current specifications, pricing or name of the nearest Authorized Distributor, contact your local sales office.

To learn more about Honeywell's sensing and control products, call **+1-815-235-6847 or 1-800-537-6945**, visit **sensing.honeywell.com,** or e-mail inquiries to **info.sc@honeywell.com**

Sensing and Control
Honeywell
1985 Douglas Drive North
Golden Valley, MN 55422
honeywell.com

004965-5-EN IL50 GLO
February 2015
Copyright © 2015 Honeywell International Inc. All rights reserved.

ООО «ЛайфЭлектроникс» “LifeElectronics” LLC

ИНН 7805602321 КПП 780501001 Р/С 40702810122510004610 ФАКБ "АБСОЛЮТ БАНК" (ЗАО) в г.Санкт-Петербурге К/С 30101810900000000703 БИК 044030703

Компания «Life Electronics» занимается поставками электронных компонентов импортного и отечественного производства от производителей и со складов крупных дистрибьюторов Европы, Америки и Азии.

С конца 2013 года компания активно расширяет линейку поставок компонентов по направлению коаксиальный кабель, кварцевые генераторы и конденсаторы (керамические, пленочные, электролитические), за счёт заключения дистрибьюторских договоров

Мы предлагаем:

- *Конкурентоспособные цены и скидки постоянным клиентам.*
- *Специальные условия для постоянных клиентов.*
- *Подбор аналогов.*
- *Поставку компонентов в любых объемах, удовлетворяющих вашим потребностям.*

- *Приемлемые сроки поставки, возможна ускоренная поставка.*
- *Доставку товара в любую точку России и стран СНГ.*
- *Комплексную поставку.*
- *Работу по проектам и поставку образцов.*
- *Формирование склада под заказчика.*

- *Сертификаты соответствия на поставляемую продукцию (по желанию клиента).*
- *Тестирование поставляемой продукции.*
- *Поставку компонентов, требующих военную и космическую приемку.*
- *Входной контроль качества.*
- *Наличие сертификата ISO.*

В составе нашей компании организован Конструкторский отдел, призванный помогать разработчикам, и инженерам.

Конструкторский отдел помогает осуществить:

- *Регистрацию проекта у производителя компонентов.*
- *Техническую поддержку проекта.*
- *Защиту от снятия компонента с производства.*
- *Оценку стоимости проекта по компонентам.*
- *Изготовление тестовой платы монтаж и пусконаладочные работы.*

Тел: +7 (812) 336 43 04 (многоканальный)
Email: org@lifeelectronics.ru

www.lifeelectronics.ru