3M™ ROUND, JACKETED, FLAT CABLE, HF759 SERIES

.050" 28 AWG STRANDED, MASS TERMINATED, HALOGEN FREE PO/PO

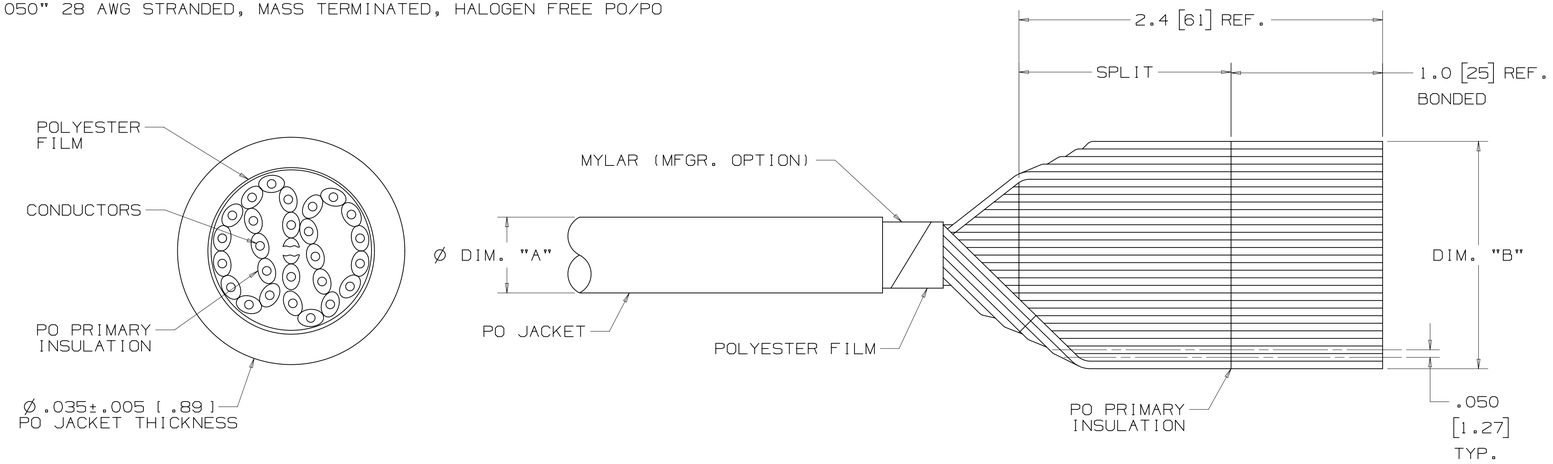

* LOW SMOKE ZERO HALOGEN (LSZH) INSULATION. ADVANTAGES OF LSZH INSULATION ARE THE LOW SMOKE (IEC 61034-2-2005) AND LOW TOXICITY OF COMBUSTION GASES (NF X 70-100-2-2006), REDUCING THE RISK TO FIREFIGHTERS AND REDUCING THE SOOT AND CORROSION DAMAGE TO NEARBY EQUIPMENT.
* ROUND CONSTRUCTION PERMITS MORE EASY ROUTING.
* 28 AWG WIRE ON .050 INCH CENTERS PERMITS MASS TERMINATION TO BROAD LINE OF IDC CONNECTORS.
* CONTINUOUS SPLIT/BOND REPEAT ALLOWS FOR MASS TERMINATIONS OF IDC CONNECTORS.
* PRIMARY CABLE IS ZIPPABLE FOR BRANCHING OR DISCRETE TERMINATION.

NOTES

1. REGULATORY INFORMATION: VISIT 3M.com/regs OR CONTACT YOUR 3M REPRESENTATIVE TO FIND THE RoHS COMPLIANCE STATUS OF THE 3M PART YOU ARE INTERESTED IN.
2. IN THE EVENT OF CONFLICT BETWEEN THIS DATA AND THAT CONTAINED IN THE PRODUCT SPECIFICATION, THE PRODUCT SPECIFICATION TAKES PRECEDENT.
3. BLUE MARKING ON ONE EDGE OF PRIMARY CABLE DESIGNATES WIRE #1.
4. DIMENSION "B" PERTAINS TO BONDED AREA ONLY.

ORDERING INFORMATION

HF759/XX XX XX

- XX (first): NUMBER OF CONDUCTORS (SEE TABLE 1)
- XX (second): BLANK = STANDARD; SO = CONTINUOUSLY BONDED WIRE (NO SPLIT)
- XX (third): BLANK = STANDARD; SF = SPLICE FREE

NOTE:
AVAILABLE IN STANDARD 275FT ROLLS. CONTACT 3M FOR AVAILABILITY OF ADDITIONAL CONDUCTOR COUNTS AND/OR CUSTOM ROLL LENGTHS.

NUMBER OF CONDUCTORS	3M PART NUMBER	DIM. "A"	DIM. "B" SEE NOTE 4
9	HF759/09	0.26 [6.6]	0.40 [10.2]
10	HF759/10	0.26 [6.6]	0.45 [11.4]
14	HF759/14	0.27 [6.9]	0.65 [16.5]
15	HF759/15	0.27 [6.9]	0.70 [17.8]
16	HF759/16	0.27 [6.9]	0.75 [19.1]
20	HF759/20	0.30 [7.6]	0.95 [24.1]
24	HF759/24	0.33 [8.4]	1.15 [29.2]
25	HF759/25	0.33 [8.4]	1.20 [30.5]
26	HF759/26	0.33 [8.4]	1.25 [31.8]
30	HF759/30	0.37 [9.4]	1.45 [36.8]
34	HF759/34	0.37 [9.4]	1.65 [41.9]
36	HF759/36	0.39 [9.9]	1.75 [44.5]
37	HF759/37	0.39 [9.9]	1.80 [45.7]
40	HF759/40	0.39 [9.9]	1.95 [49.5]
50	HF759/50	0.44 [11.2]	2.45 [62.2]
60	HF759/60	0.47 [11.9]	2.95 [74.9]
64	HF759/64	0.50 [12.7]	3.15 [80.0]

2 PHYSICAL:

JACKET MATERIAL: HALOGEN FREE POLYOLEFIN (PO)
COLOR: DARK GRAY
PRIMARY MATERIAL: HALOGEN FREE POLYOLEFIN (PO)
COLOR: DARK GRAY

MARKING:
STANDARD: NONE
CONDUCTORS: 28 AWG, 7 X 36 AWG [7 X Ø .127] TINNED STRANDED COPPER
SHIELDING: POLYESTER FILM

2 ELECTRICAL:

VOLTAGE RATING: USA 150V CANADIAN 150V EU: <50V
INSULATION RESISTANCE: (PRIMARY CABLE) >1 X $10^{10}\Omega$/10ft. [3m]

	UNBALANCED	BALANCED
CHARACTERISTIC IMPEDANCE:	75Ω	136Ω
CAPACITANCE:	22.6 pF/ft [74.3 pF/m]	12.4 pF/ft [40.6 pF/m]
INDUCTANCE:	.13μH/ft [.43μH/m]	.23μH/ft [.75μH/m]
PROPAGATION DELAY:	1.69 ns/ft [5.54 ns/m]	1.69 ns/ft [5.54 ns/m]
VELOCITY OF PROPAGATION:	60%	60%

NOTE: UNBALANCED IS MEASURED BETWEEN GROUND-SIGNAL-GROUND CONDUCTORS.
BALANCED IS MEASURED BETWEEN CONDUCTORS WITHIN A PAIR.
"MEASURED VALUES ARE TYPICAL"

2 ENVIRONMENTAL:

TEMPERATURE RATING: -40°C TO +105°C (EIA-364-32G, METHOD A, TEST CONDITION 2)
-10°C TO +75°C (UL TEMPERATUE RATING)

FLAMMABILITY RATING: INTERNAL: HORIZONTAL FLAME PER UL758
EXTERNAL: CABLE FLAME (VERTICAL) PER UL758

HALOGEN FREE IS DEFINED AS BOTH 1) NO HALOGN COMPOUNDS THAT ARE INTENTIONALLY ADDED TO THE PRODUCT OR USED IN THE MANUFACTURING PROCESS FOR THE PRODUCT AND 2) ANY IMPURITIES PRESENT ARE LESS THAN 900ppm BROMINE, LESS THAN 900ppm CHLORINE AND/OR LESS THAN 1500ppm TOTAL BROMINE AND CHLORINE. THE LATTER ARE THE LEVELS SET FORTH IN CERTIAN INDUSTRY STANDARDS FOR PRINTED CIRCUIT BOARDS, SUCH AS THE INTERNATIONAL ELECTROTECHNICAL COMMISSION (IEC) 61249-2-21 STANDARDS. THIS INFORMATION REPRESENTS 3M'S KNOWLEDGE AND BELIEF WHICH MAY BE BASED IN WHOLE OR IN PART ON INFORMATION PROVIDED BY 3RD PARTY SUPPLIERS TO 3M.

3M ELECTRONICS MATERIALS SOLUTIONS DIVISION
INTERCONNECT SOLUTIONS
http://www.3Mconnectors.com

3M IS A TRADEMARK OF 3M COMPANY.

FOR TECHNICAL, SALES OR ORDERING INFORMATION CALL 800-225-5373

UL FILE NO: E42769
STYLE NO: 22170

INCH [MM]			
TOLERANCE - UNLESS NOTED			
	.X	.XX	.XXX
INCH	±.1	±.05	±.010
[ ] = DIM. FOR REFERENCE ONLY			

REV	ECO	ISSUE DATE AND DESCRIPTION	DRFT	CHKD
E	79568	JUL 31,2018 REVISED & REDRAWN	JNC	BM

DESIGN REFERENCE | NEXT ASSEMBLY | ACCESS CODES | DRF: CASTIGLIONE DATE: JUN 14,2018 | MFG | DATE | CHKD | DATE | APPVL: B. MIZE DATE: JUN 14,2018

DIVISION | DIVISION CODE: EMSD

DO NOT SCALE DRAWING | SCALE | TOLERANCES EXCEPT AS NOTED: INCHES .0 ± .00 ± .000 ± .0000 ± MILLIMETERS .0 ± .00 ± .000 ± ANGLES ±

THIRD ANGLE PROJECTION | INTERPRET PER ASME Y14.5 - 2009 | MAX SURFACE ROUGHNESS ☐ ALL SURFACES ☐ MARKED ONLY

© 3M COPYRIGHT 2018
This document and the information it contains are 3M property and may not be reproduced or further distributed without 3M permission, or used or disclosed other than for 3M authorized purposes. All rights reserved.

3M Center St. Paul, MN 55144

TITLE: RD, JACKETED, 28 AWG, FLAT CABLE, HF759, HALOGEN FREE

CAGE NUMBER | SIZE: D | DRAWING NO. 78-5100-2336-5 | REV. E

MODEL: HF759 | DET LISTS ☐ YES ☒ NO | SHT 1 OF 2

Imaged: Central Standard Time 8/1/2018 -- UTC Offset (hrs) 6
78-5100-2336-5 DRAWING NUMBER | E REVISION

3M™ ROUND, JACKETED, FLAT CABLE, HF759 SERIES

.050" 28 AWG STRANDED, MASS TERMINATED, HALOGEN FREE PO/PO

Regulatory: For regulatory information about this product, visit 3M.com/regs or contact your 3M representative.

Technical Information: The technical information, recommendations and other statements contained in this document are based upon tests or experience that 3M believes are reliable, but the accuracy or completeness of such information is not guaranteed.

Product Use: Many factors beyond 3M's control and uniquely within user's control can affect the use and performance of a 3M product in a particular application. Given the variety of factors that can affect the use and performance of a 3M product, user is solely responsible for evaluating the 3M product and determining whether it is fit for a particular purpose and suitable for user's method of application.

Warranty, Limited Remedy, and Disclaimer: Unless an additional warranty is specifically stated on the applicable 3M product packaging or product literature, 3M warrants that each 3M product meets the applicable 3M product specification at the time 3M ships the product. 3M MAKES NO OTHER WARRANTIES OR CONDITIONS, EXPRESS OR IMPLIED, INCLUDING, BUT NOT LIMITED TO, ANY IMPLIED WARRANTY OR CONDITION OF MERCHANTABILITY OR FITNESS FOR A PARTICULAR PURPOSE OR ANY IMPLIED WARRANTY OR CONDITION ARISING OUT OF A COURSE OF DEALING, CUSTOM OR USAGE OR TRADE. If the 3M product does not conform to this warranty, then the sole and exclusive remedy is, at 3M's option, replacement of the 3M product or refund of the purchase price.

Limitation of Liability: Except where prohibited by law, 3M will not be liable for any loss or damage arising from the 3M product, whether direct, indirect, special, incidental or consequential, regardless of the legal theory asserted, including warranty, contract, negligence or strict liability.

3M Electronics Materials Solutions Division
6801 River Place Blvd.
Austin, TX 78726-9000
1-800-225-5373
www.3M.com/interconnect

REV	ECO	ISSUE DATE AND DESCRIPTION	DRFT	CHKD
E	79568	JUL 31,2018 REVISED & REDRAWN	JNC	BM

DESIGN REFERENCE | NEXT ASSEMBLY

ACCESS CODES

DRFT CASTIGLIONE | DATE JUN 14,2018 | MFG | DATE

CHKD | DATE | APPVL B. MIZE | DATE JUN 14,2018

DIVISION | DIVISION CODE EMSD

DO NOT SCALE DRAWING | SCALE

TOLERANCES EXCEPT AS NOTED

INCHES .0 ± .00 ± .000 ± .0000 ±

MILLIMETERS 0 ± .0 ± .00 ± .000 ±

ANGLES ±

THIRD ANGLE PROJECTION

INTERPRET PER ASME Y14.5 - 2009

MAX SURFACE ROUGHNESS ☐ ALL SURFACES ☐ MARKED ONLY

3M 3M Center St. Paul, MN 55144

© 3M COPYRIGHT 2018
This document and the information it contains are 3M property and may not be reproduced or further distributed without 3M permission, or used or disclosed other than for 3M authorized purposes. All rights reserved.

TITLE RD, JACKETED, 28 AWG, FLAT CABLE, HF759, HALOGEN FREE

CAGE NUMBER | SIZE D | DRAWING NO. 78-5100-2336-5 | REV. E

MODEL HF759 | DET LISTS ☐ YES ☒ NO | SHT 2 OF 2

78-5100-2336-5 DRAWING NUMBER | E REVISION

Imaged: Central Standard Time 8/1/2018 -- UTC Offset (hrs) 6

ООО «ЛайфЭлектроникс» “LifeElectronics” LLC

ИНН 7805602321 КПП 780501001 Р/С 40702810122510004610 ФАКБ "АБСОЛЮТ БАНК" (ЗАО) в г.Санкт-Петербурге К/С 30101810900000000703 БИК 044030703

Компания «Life Electronics» занимается поставками электронных компонентов импортного и отечественного производства от производителей и со складов крупных дистрибьюторов Европы, Америки и Азии.

С конца 2013 года компания активно расширяет линейку поставок компонентов по направлению коаксиальный кабель, кварцевые генераторы и конденсаторы (керамические, пленочные, электролитические), за счёт заключения дистрибьюторских договоров

Мы предлагаем:

- *Конкурентоспособные цены и скидки постоянным клиентам.*
- *Специальные условия для постоянных клиентов.*
- *Подбор аналогов.*
- *Поставку компонентов в любых объемах, удовлетворяющих вашим потребностям.*

- *Приемлемые сроки поставки, возможна ускоренная поставка.*
- *Доставку товара в любую точку России и стран СНГ.*
- *Комплексную поставку.*
- *Работу по проектам и поставку образцов.*
- *Формирование склада под заказчика.*

- *Сертификаты соответствия на поставляемую продукцию (по желанию клиента).*
- *Тестирование поставляемой продукции.*
- *Поставку компонентов, требующих военную и космическую приемку.*
- *Входной контроль качества.*
- *Наличие сертификата ISO.*

В составе нашей компании организован Конструкторский отдел, призванный помогать разработчикам, и инженерам.

Конструкторский отдел помогает осуществить:

- *Регистрацию проекта у производителя компонентов.*
- *Техническую поддержку проекта.*
- *Защиту от снятия компонента с производства.*
- *Оценку стоимости проекта по компонентам.*
- *Изготовление тестовой платы монтаж и пусконаладочные работы.*

Тел: +7 (812) 336 43 04 (многоканальный)
Email: org@lifeelectronics.ru

www.lifeelectronics.ru