Interactive Catalog Supplements Catalog PDFs

If you need detailed product information, or help choosing the right product for your application, see our Interactive Catalog. Use the Interactive Catalog to access the most complete and up-to-date information available.

The Interactive Catalog provides an extensive collection of product specifications, application data, and technical literature that can be searched based on criteria you select.

This PDF catalog information was published in November 2000.

CHECK THIS OUT!

Sensing and Control
Interactive
Catalog...

Click this icon to try the Interactive Catalog.

Sensing and Control
Honeywell Inc.
11 West Spring Street
Freeport, IL 61032

Rocker Button Switches

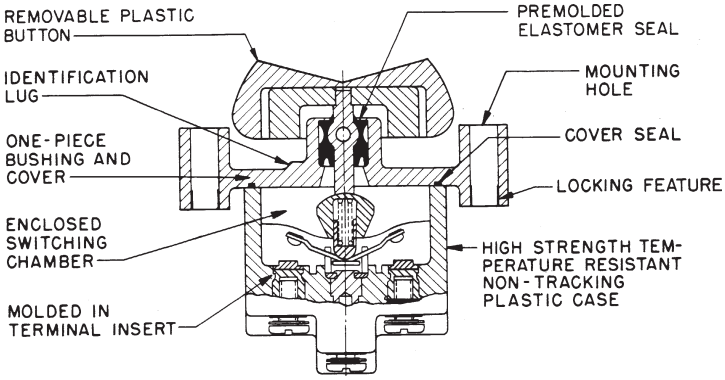

UL/CSA Rating Code	Electrical Rating
L192	10 amps-125, 250, 277 VAC; ¼ Hp-125 VAC; ½ Hp-250, 277 VAC 3 Amps-125 VAC "L"
L191	15 amps-125, 250, 277 VAC: ½ Hp-125 VAC; 1Hp-250, 277 VAC 5 amps-120 VAC "L"

Application Note: Honeywell MICRO SWITCH does *not* recommend the use of silver cadmium oxide switch contacts in non-arcing loads. Non-arcing loads are generally loads less than 12 volts and/or 0.5 amp. TP switches use silver cadmium oxide contacts. For other options, contact the MICRO SWITCH Application Center at 1-800-537-6945.

FEATURES

- 2 and 3 position pushbutton action
- Various button colors
- 1, 2, and 4 pole circuitry
- Flush panel and above panel mounting
- Temperature range is from –65°F to +160°F (–54°C to +71°C)
- UL recognized, CSA certified
- CE approved

CONSTRUCTION

Above panel mounting gives a distinct button appearance. Flush panel mounting presents a low button profile.

TERMINAL CIRCUIT IDENTIFICATION

Terminal identifications are referred to in the order guides to indicate which circuits are made in each toggle position (i.e., 1-2 indicates circuit closure through terminals 1 and 2).

One pole

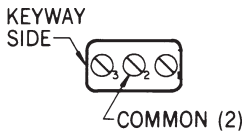

Two pole

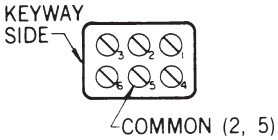

Four pole

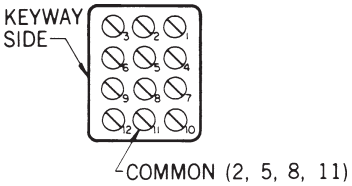

Typical two-pole flush panel translucent button switch

Typical one-pole above panel transparent button switch

BUTTON OPTIONS

Buttons are removable and interchangeable. They measure .87″ × 1.46″ (22,1 × 37,1 mm).

Transparent (colorless plastic) buttons accept under-the-surface legend inserts for station and function identification. **Legend inserts are not furnished.** Insert legending can be done by your local supplier.

Translucent (white plastic) buttons have a clear appearance.

Colored (opaque plastic) buttons are excellent for color coding switch functions.

SWITCHES WITHOUT BUTTONS

To order switches without buttons, convert catalog listings shown in the order guides. Substitute **TP7** for TP4 and TP16 above panel mounted switches; substitute **TP8** for TP201 and TP12 flush panel mounted switches. Order buttons separately from the chart below.

BUTTON ORDER GUIDE

Color	Catalog Listing
Translucent	12PA6
Transparent	12PA4
White*	12PA5-W
Yellow*	12PA5-Y
Black*	12PA5-BK
Green*	12PA5-G
Red*	12PA5-R
Blue*	12PA5-BL

* Opaque

2-POSITION ORDER GUIDE

Furnished with buttons.

No. of Poles	Circuits Made with Button at:		UL/CSA Rating Code	Elec. Rating Code	Catalog Listings			
					Flush Panel		Above Panel	
	Ident. Lug Position	Opposite Ident. Lug			Translucent Button	Transparent Button	Translucent Button	Transparent Button
1	OFF	2-3	L191	1	1TP201-2	1TP12-2	1TP216-2	1TP4-2
	OFF*	2-3	L192	2	1TP201-4	—	—	—
	1-2*	OFF	L192	2	1TP201-6	1TP12-6	—	1TP4-6
	1-2	2-3	L191	1	1TP201-3	1TP12-3	1TP216-3	1TP4-3
	1-2*	2-3	L192	2	1TP201-8	1TP12-8	1TP216-8	—
2	OFF	2-3, 5-6	L191	3	2TP201-2	2TP12-2	2TP216-2	2TP4-2
	1-2,4-5	2-3, 5-6	L191	3	2TP201-3	2TP12-3	2TP216-3	2TP4-3
	1-2,4-5*	2-3, 5-6	L192	4	2TP201-8	2TP12-8	2TP216-8	2TP4-8
4	OFF	2-3, 5-6, 8-9, 11-12	L191	5	4TP201-2	4TP12-2	—	—
	OFF*	2-3, 5-6, 8-9, 11-12	L192	6	—	—	4TP216-4	—
	1-2, 4-5, 7-8, 10-11	2-3, 5-6, 8-9, 11-12	L191	5	4TP201-3	4TP12-3	4TP216-3	4TP4-3
	1-2, 4-5, 7-8, 10-11*	2-3, 5-6, 8-9, 11-12	L192	6	—	—	4TP216-8	—

* These positions only are momentary. All others are maintained.

Rocker Button Switches

3 - POSITION ORDER GUIDE

Furnished with buttons.

No. of Poles	Circuits Made with Button at: Ident. Lug Position	Center Position	Opposite Lug Position	UL/CSA Rating Code	Elec. Rating Code	Catalog Listings: Flush Panel Translucent Button	Flush Panel Transparent Button	Above Panel Translucent Button	Above Panel Transparent Button
1	1-2	OFF	2-3	L191	1	1TP201-1	1TP12-1	1TP216-1	1TP4-1
	1-2*	OFF	2-3	L192	2	1TP201-5	1TP12-5	1TP216-5	1TP4-5
	1-2*	OFF	2-3*	L192	2	1TP201-7	1TP12-7	1TP216-7	1TP4-7
	NONE**	OFF	2-3	L191	1	1TP201-21	1TP12-21	—	1TP4-21
	NONE**	1-2	2-3	L191	1	1TP201-31	1TP12-31	—	1TP4-31
	NONE**	1-2	2-3*	L192	2	1TP201-51	1TP12-51	1TP216-51	1TP4-51
	1-2*	OFF	NONE**	L192	2	1TP201-61	1TP12-61	1TP216-61	1TP4-61
2	1-2, 4-5	OFF	2-3, 5-6	L191	3	2TP201-1	2TP12-1	2TP216-1	2TP4-1
	1-2, 4-5*	OFF	2-3, 5-6	L192	4	2TP201-5	2TP12-5	2TP216-5	2TP4-5
	1-2, 4-5*	OFF	2-3, 5-6*	L192	4	2TP201-7	2TP12-7	2TP216-7	2TP4-7
	NONE**	OFF	2-3, 5-6	L191	3	2TP201-21	2TP12-21	2TP216-21	2TP4-21
	NONE**	1-2, 4-5	2-3, 5-6	L191	3	2TP201-31	2TP12-31	2TP216-31	2TP4-31
	NONE**	1-2, 4-5	2-3, 5-6*	L192	4	2TP201-512	2TP12-512	2TP216-512	2TP4-512
	1-2, 4-5*	OFF	NONE**	L192	4	2TP201-61	2TP12-61	2TP216-61	2TP4-61
	1-2, 4-5	1-2, 5-6	2-3, 5-6	L191	3	2TP201-10†	2TP12-10	2TP216-10	2TP4-10
	1-2, 4-5*	1-2, 5-6	2-3, 5-6	L192	4	2TP201-50†	2TP12-50	2TP216-50	2TP4-50
	1-2, 4-5*	1-2, 5-6	2-3, 5-6*	L192	4	2TP201-70†	2TP12-70	2TP216-70	2TP4-70
4	1-2, 4-5, 7-8, 10-11	OFF	2-3, 5-6 8-9, 11-12	L191	5	4TP201-1	4TP12-1	4TP216-1	4TP4-1
	1-2, 4-5 7-8, 10-11*	OFF	2-3, 5-6 8-9, 11-12	L192	6	4TP201-5	4TP12-5	—	4TP4-5
	1-2, 4-5, 7-8, 10-11*	OFF	2-3, 5-6 8-9, 11-12*	L192	6	4TP201-7	4TP12-7	4TP216-7	4TP4-7
	NONE**	OFF	2-3, 5-6, 8-9, 11-12	L191	5	4TP201-21	4TP12-21	4TP216-21	4TP4-21
	NONE**	1-2, 4-5 7-8, 10-11	2-3, 5-6, 8-9, 11-12	L191	5	4TP201-31	—	4TP216-31	4TP4-31
	NONE**	1-2, 4-5 7-8, 10-11	2-3, 5-6 8-9, 11-12*	L192	6	4TP201-51	—	4TP216-51	4TP4-51
	1-2, 4-5, 7-8, 10-11*	OFF	NONE**	L192	6	4TP201-61	4TP12-61	4TP216-61	4TP4-61
	1-2, 4-5, 7-8, 10-11	2-3, 4-5	2-3, 5-6, 8-9, 11-12	L191	5	4TP201-10†	4TP12-10	—	4TP4-10
	1-2, 4-5, 7-8, 10-11*	2-3, 4-5 7-8, 11-12	2-3, 5-6, 8-9, 11-12	L192	6	4TP201-50†	4TP12-50	4TP216-50	4TP4-50
	1-2, 4-5, 7-8, 10-11*	2-3, 4-5	2-3, 5-6, 8-9, 11-12*	L192	6	4TP201-70†	4TP12-70	4TP216-70	4TP4-70

*These positions only are momentary. All others are maintained.
**Operator is blocked from these positions. Switch becomes two position, with center being one extreme position.
† Special on-on-on circuitry. See page 123.

Rocker Button Switches

MOUNTING DIMENSIONS (For reference only)

Above Panel

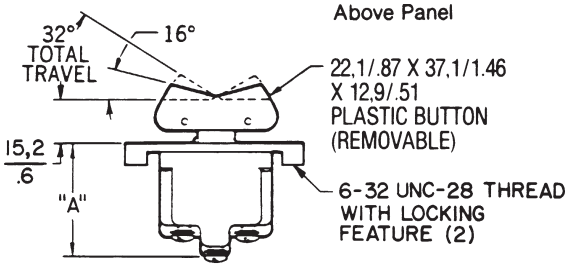

	DIM. "A"
1-POLE	29,5 / 1.16
2 & 4-POLE	34,4 / 1.35

Flush Panel

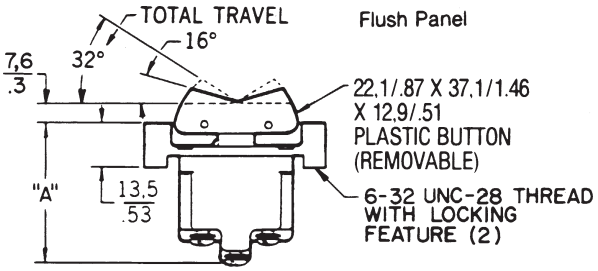

	DIM. "A"
1-POLE	36,8 / 1.45
2 & 4-POLE	41,7 / 1.64

Panel cutout

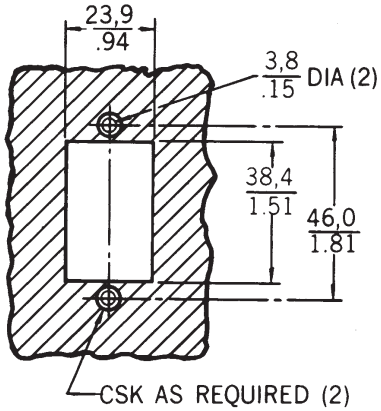

One pole

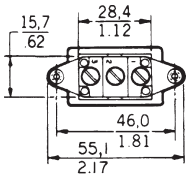

Two pole

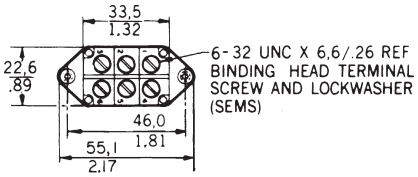

Four pole

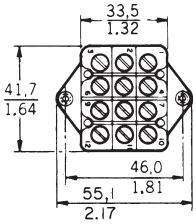

Key: 0,0 = mm / 0.00 = inches

Flange mounting torque is 10–12 in./lbs.
Terminal screw mounting torque is 5 in./lbs. max.

ООО «ЛайфЭлектроникс» “LifeElectronics” LLC

ИНН 7805602321 КПП 780501001 Р/С 40702810122510004610 ФАКБ "АБСОЛЮТ БАНК" (ЗАО) в г.Санкт-Петербурге К/С 30101810900000000703 БИК 044030703

Компания «Life Electronics» занимается поставками электронных компонентов импортного и отечественного производства от производителей и со складов крупных дистрибьюторов Европы, Америки и Азии.

С конца 2013 года компания активно расширяет линейку поставок компонентов по направлению коаксиальный кабель, кварцевые генераторы и конденсаторы (керамические, пленочные, электролитические), за счёт заключения дистрибьюторских договоров

Мы предлагаем:

- *Конкурентоспособные цены и скидки постоянным клиентам.*
- *Специальные условия для постоянных клиентов.*
- *Подбор аналогов.*
- *Поставку компонентов в любых объемах, удовлетворяющих вашим потребностям.*

- *Приемлемые сроки поставки, возможна ускоренная поставка.*
- *Доставку товара в любую точку России и стран СНГ.*
- *Комплексную поставку.*
- *Работу по проектам и поставку образцов.*
- *Формирование склада под заказчика.*

- *Сертификаты соответствия на поставляемую продукцию (по желанию клиента).*
- *Тестирование поставляемой продукции.*
- *Поставку компонентов, требующих военную и космическую приемку.*
- *Входной контроль качества.*
- *Наличие сертификата ISO.*

В составе нашей компании организован Конструкторский отдел, призванный помогать разработчикам, и инженерам.

Конструкторский отдел помогает осуществить:

- *Регистрацию проекта у производителя компонентов.*
- *Техническую поддержку проекта.*
- *Защиту от снятия компонента с производства.*
- *Оценку стоимости проекта по компонентам.*
- *Изготовление тестовой платы монтаж и пусконаладочные работы.*

Тел: +7 (812) 336 43 04 (многоканальный)
Email: org@lifeelectronics.ru

www.lifeelectronics.ru