Voltage Detector IC Series

Low Voltage Standard CMOS Voltage Detector ICs

BU48xx series BU49xx series

●General Description

ROHM standard CMOS reset IC series is a high-accuracy, low current consumption reset IC series. The lineup was established with two output types (Nch open drain and CMOS output) and detection voltage range from 0.9V to 4.8V in increments of 0.1V, so that the series may be selected according to the application at hand.

●Features

- Ultra-low current consumption
- High accuracy detection, Ultra-low voltage detection
- Two output types (Nch open drain and CMOS output)
- Wide operating temperature range
- Very small and low height package
- Package SSOP5 and SOP4 is similar to SOT-23-5 and SC-82 respectively (JEDEC)

●Key Specifications

- Detection voltage: 0.9V to 4.8V 0.1V steps
- High accuracy detection voltage: ±1.0%
- Ultra-low current consumption: 0.55μA (Typ.)
- Operating temperature range: -40°C to +125°C

●Package

SSOP5	2.90mm x 2.80mm x 1.25mm
SOP4	2.00mm x 2.10mm x 0.95mm
VSOF5	1.60mm x 1.60mm x 0.60mm

●Applications

All electronic devices that use micro controllers and logic circuits

●Typical Application Circuit

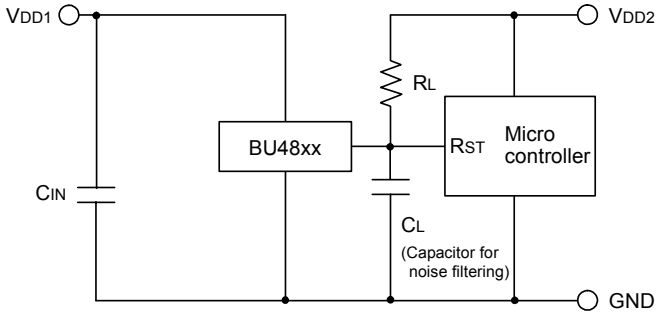

(Open Drain Output type)
BU48xx series

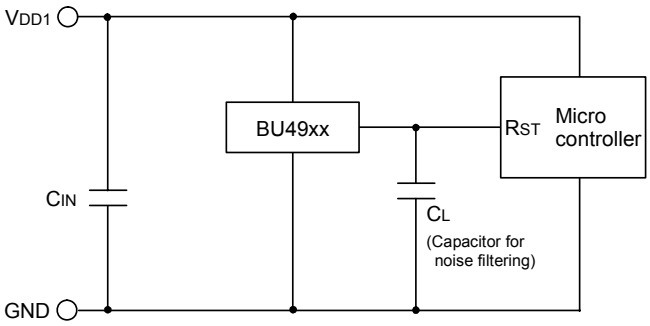

(CMOS Output type)
BU49xx series

○Product structure : Silicon monolithic integrated circuit ○This product is not designed for protection against radioactive rays

© 2014 ROHM Co., Ltd. All rights reserved.

●Connection Diagram & Pin Descriptions

SSOP5
TOP VIEW

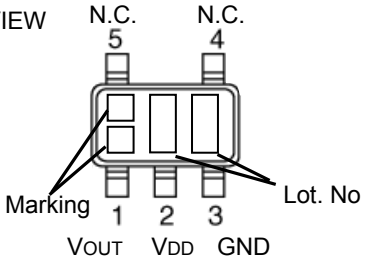

PIN No.	Symbol	Function
1	VOUT	Reset output
2	VDD	Power supply voltage
3	GND	GND
4	N.C.	Unconnected terminal
5	N.C.	Unconnected terminal

SOP4
TOP VIEW

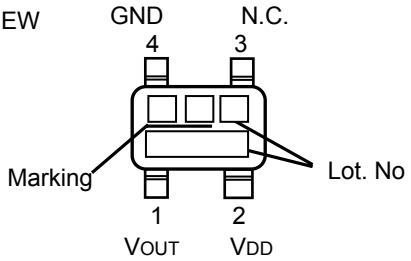

PIN No.	Symbol	Function
1	VOUT	Reset output
2	VDD	Power supply voltage
3	N.C.	Unconnected terminal
4	GND	GND

VSOF5
TOP VIEW

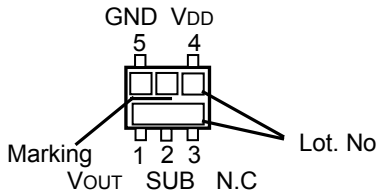

PIN No.	Symbol	Function
1	VOUT	Reset output
2	SUB	Substrate*
3	N.C.	Unconnected terminal
4	VDD	Power supply voltage
5	GND	GND

*Connect the substrate to VDD

●Ordering Information

B	U	x	x	x	x	x	-	T	R

- **Part Number**
- **Output Type**
  48 : Open Drain
  49 : CMOS
- **Reset Voltage Value**
  09 : 0.9V
  ⇩ 0.1V step
  48 : 4.8V
- **Package**
  G : SSOP5
  F : SOP4
  FVE : VSOF5
- **Packaging and forming specification**
  TR : Embossed tape and reel

© 2014 ROHM Co., Ltd. All rights reserved.

●Lineup

Output Type	Open Drain		CMOS	
Detection Voltage	Marking	Part Number	Marking	Part Number
4.8V	JR	BU4848	LH	BU4948
4.7V	JQ	BU4847	LG	BU4947
4.6V	JP	BU4846	LF	BU4946
4.5V	JN	BU4845	LE	BU4945
4.4V	JM	BU4844	LD	BU4944
4.3V	JL	BU4843	LC	BU4943
4.2V	JK	BU4842	LB	BU4942
4.1V	JJ	BU4841	LA	BU4941
4.0V	JH	BU4840	KZ	BU4940
3.9V	JG	BU4839	KY	BU4939
3.8V	JF	BU4838	KX	BU4938
3.7V	JE	BU4837	KW	BU4937
3.6V	JD	BU4836	KV	BU4936
3.5V	JC	BU4835	KU	BU4935
3.4V	JB	BU4834	KT	BU4934
3.3V	JA	BU4833	KS	BU4933
3.2V	HZ	BU4832	KR	BU4932
3.1V	HY	BU4831	KQ	BU4931
3.0V	HX	BU4830	KP	BU4930
2.9V	HW	BU4829	KN	BU4929
2.8V	HV	BU4828	KM	BU4928
2.7V	HU	BU4827	KL	BU4927
2.6V	HT	BU4826	KK	BU4926
2.5V	HS	BU4825	KJ	BU4925
2.4V	HR	BU4824	KH	BU4924
2.3V	HQ	BU4823	KG	BU4923
2.2V	HP	BU4822	KF	BU4922
2.1V	HN	BU4821	KE	BU4921
2.0V	HM	BU4820	KD	BU4920
1.9V	HL	BU4819	KC	BU4919
1.8V	HK	BU4818	KB	BU4918
1.7V	HJ	BU4817	KA	BU4917
1.6V	HH	BU4816	JZ	BU4916
1.5V	HG	BU4815	JY	BU4915
1.4V	HF	BU4814	JX	BU4914
1.3V	HE	BU4813	JW	BU4913
1.2V	HD	BU4812	JV	BU4912
1.1V	HC	BU4811	JU	BU4911
1.0V	HB	BU4810	JT	BU4910
0.9V	HA	BU4809	JS	BU4909

© 2014 ROHM Co., Ltd. All rights reserved.

●Absolute Maximum Ratings

Parameter		Symbol	Limits	Unit
Power Supply Voltage		V_{DD}	-0.3 to +7	V
Output Voltage	Nch Open Drain Output	V_{OUT}	GND-0.3 to +7	V
	CMOS Output		GND-0.3 to V_{DD}+0.3	
Output Current		Io	70	mA
Power Dissipation	SSOP5 *1*4	Pd	540	mW
	SOP4 *2*4		400	
	VSOF5 *3*4		210	
Operation Temperature Range		Topt	-40 to +125	°C
Ambient Storage Temperature		Tstg	-55 to +125	℃

*1 When used at temperatures higher than Ta=25℃, the power is reduced by 5.4mW per 1℃ above 25℃.
*2 When used at temperatures higher than Ta=25℃, the power is reduced by 4.0mW per 1℃ above 25℃.
*3 When used at temperatures higher than Ta=25℃, the power is reduced by 2.1mW per 1℃ above 25℃.
*4 When a ROHM standard circuit board (70mm×70mm×1.6mm, glass epoxy board)is mounted.

●Electrical Characteristics

Parameter	Symbol	Condition		Limits Min.	Limits Typ.	Limits Max.	Unit
Detection Voltage	V_{DET}	V_{DD}=H→L , Ta=25℃, R_L=470kΩ		V_{DET}(T) ×0.99	V_{DET}(T)	V_{DET}(T) ×1.01	V
		VDET=1.8V	Ta=+25°C	1.782	1.8	1.818	
			Ta=-40°C to 85°C	1.741	-	1.860	
			Ta=85°C to 125°C	1.718	-	1.883	
		VDET=2.5V	Ta=+25°C	2.475	2.5	2.525	
			Ta=-40°C to 85°C	2.418	-	2.584	
			Ta=85°C to 125°C	2.386	-	2.615	
		VDET=3.0V	Ta=+25°C	2.970	3.0	3.030	
			Ta=-40°C to 85°C	2.901	-	3.100	
			Ta=85°C to 125°C	2.864	-	3.139	
		VDET=3.3V	Ta=+25°C	3.267	3.3	3.333	
			Ta=-40°C to 85°C	3.191	-	3.410	
			Ta=85°C to 125°C	3.150	-	3.452	
		VDET=4.2V	Ta=+25°C	4.158	4.2	4.242	
			Ta=-40°C to 85°C	4.061	-	4.341	
			Ta=85°C to 125°C	4.009	-	4.394	
Detection Voltage Temperature Coefficient	$V_{DET}/\Delta T$	Ta=-40℃ to 125℃ *1		-	±30	-	ppm/℃
Hysteresis Voltage	ΔV_{DET}	V_{DD}=L→H→L Ta=-40℃ to 125℃ R_L=470kΩ	V_{DET}≤1.0V	V_{DET} ×0.03	V_{DET} ×0.05	V_{DET} ×0.08	V
			V_{DET}≥1.1V	V_{DET} ×0.03	V_{DET} ×0.05	V_{DET} ×0.07	

*1 Guaranteed by design.(Outgoing inspection is not done on all products.)
V_{DET}(T) : Standard Detection Voltage (0.9V to 4.8V, 0.1V step)
R_L: Pull-up resistor to be connected between V_{OUT} and power supply.

© 2014 ROHM Co., Ltd. All rights reserved.

Unless Otherwise Specified Ta=-25 to 125℃

Parameter	Symbol	Condition		Limit Min.	Limit Typ.	Limit Max.	Unit
Circuit Current when ON	I_{DD1}	$V_{DD}=V_{DET}-0.2V$	V_{DET}=0.9-1.3V	-	0.15	0.88	μA
			V_{DET}=1.4-2.1V	-	0.20	1.05	
			V_{DET}=2.2-2.7V	-	0.25	1.23	
			V_{DET}=2.8-3.3V	-	0.30	1.40	
			V_{DET}=3.4-4.2V	-	0.35	1.58	
			V_{DET}=4.3-4.8V	-	0.40	1.75	
Circuit Current when OFF	I_{DD2}	$V_{DD}=V_{DET}+2.0V$	V_{DET}=0.9-1.3V	-	0.30	1.40	μA
			V_{DET}=1.4-2.1V	-	0.35	1.58	
			V_{DET}=2.2-2.7V	-	0.40	1.75	
			V_{DET}=2.8-3.3V	-	0.45	1.93	
			V_{DET}=3.4-4.2V	-	0.50	2.10	
			V_{DET}=4.3-4.8V	-	0.55	2.28	
Operating Voltage Range	V_{OPL}	V_{OL}≤0.4V, Ta=25 to 125℃, R_L=470kΩ		0.70	-	-	V
		V_{OL}≤0.4V, Ta=-40 to 25℃, R_L=470kΩ		0.90	-	-	
'Low' Output Voltage (Nch)	V_{OL}	V_{DD}=0.85V, I_{SINK} = 20 μA		-	-	0.05	V
		V_{DD}=1.5V, I_{SINK} = 1 mA, V_{DET}=1.7-4.8V		-	-	0.5	V
		V_{DD}=2.4V, I_{SINK} = 4 mA, V_{DET}=2.7-4.8V		-	-	0.5	
'High' Output Voltage (Pch) (only BU49xx)	V_{OH}	VDD=4.8V, I_{SOURCE}=1.7mA, V_{DET}=0.9V to 3.9V		VDD-0.5	-	-	V
		VDD=6.0V, I_{SOURCE}=2.0mA, V_{DET}=4.0V to 4.8V		VDD-0.5	-	-	
Output Leak Current when OFF (only BU48xx)	I_{leak}	$V_{DD}=V_{DS}$=7V Ta=-40℃ to 85℃		-	0	0.1	μA
		$V_{DD}=V_{DS}$=7V Ta=85℃ to 125℃		-	0	1	

* This product is not designed for protection against radioactive rays.
V_{DET}(T) : Standard Detection Voltage (0.9V to 4.8V, 0.1V step)
R_L: Pull-up resistor to be connected between V_{OUT} and power supply.

●Block Diagrams

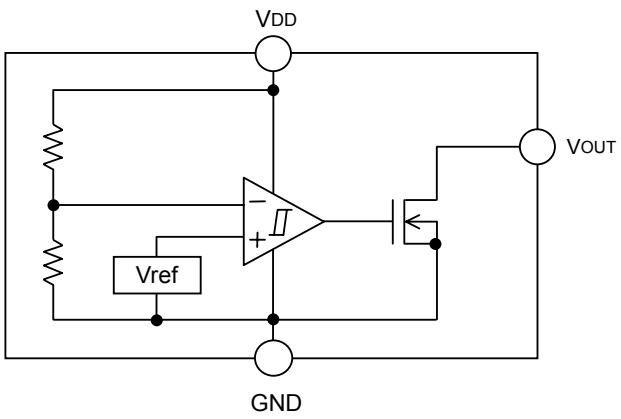

Fig.1 BU48xx Series

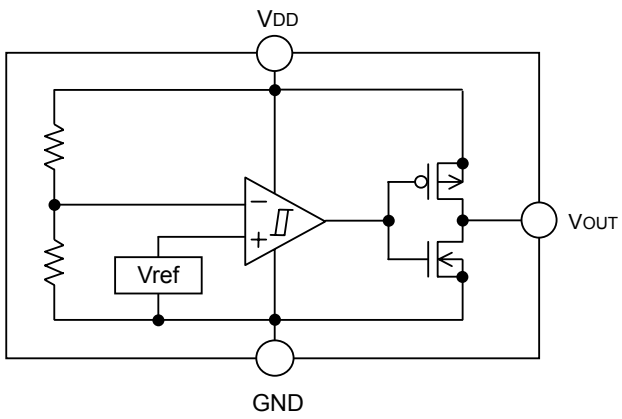

Fig.2 BU49xx Series

© 2014 ROHM Co., Ltd. All rights reserved.

●**Typical Performance Curves**

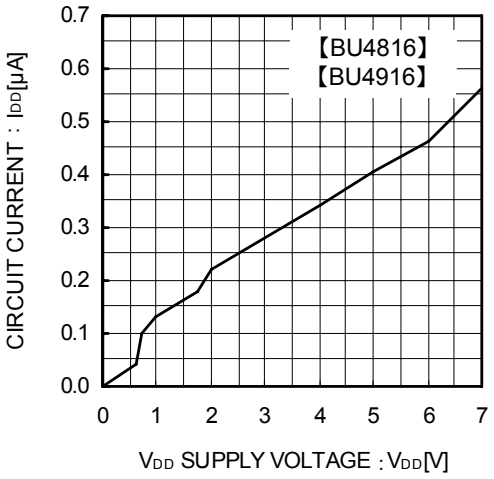

Fig.3 Circuit Current

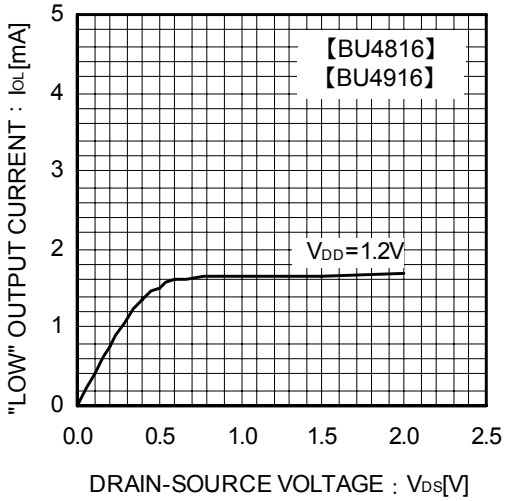

Fig.4 “LOW” Output Current

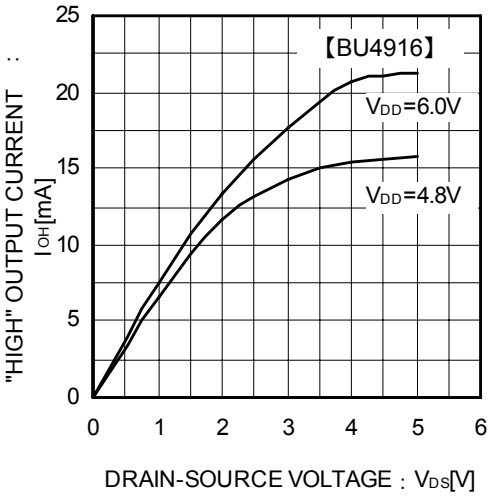

Fig.5 “High” Output Current

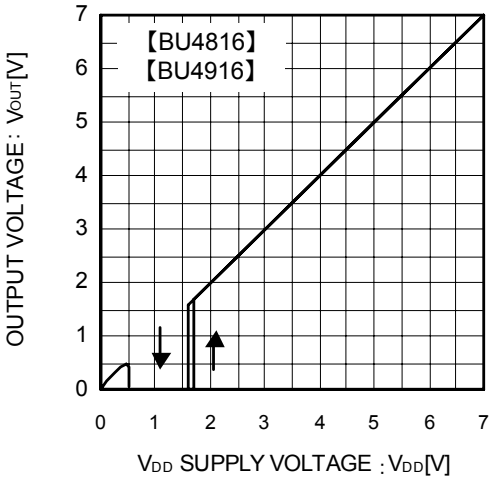

Fig.6 I/O Characteristics

© 2014 ROHM Co., Ltd. All rights reserved.

●**Typical Performance Curves – continued**

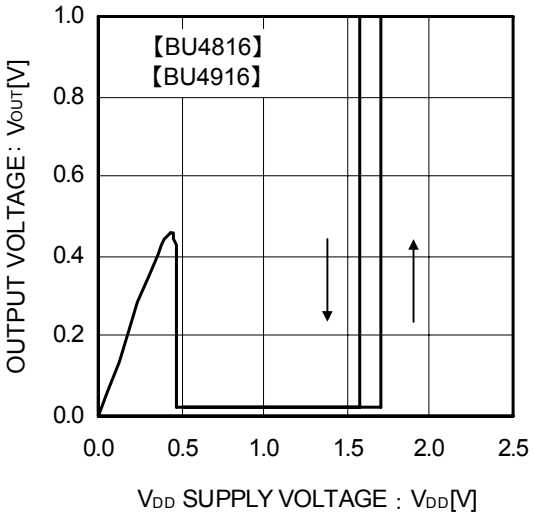

Fig.7 Operating Limit Voltage

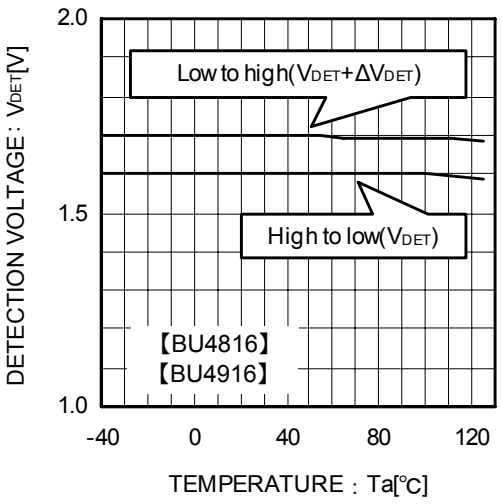

Fig.8 Detecting Voltage
Release Voltage

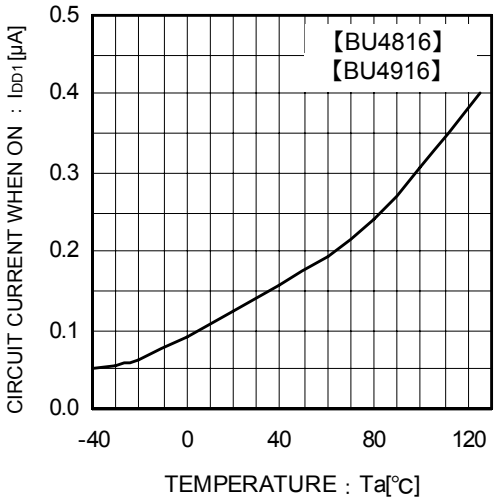

Fig.9 Circuit Current when ON

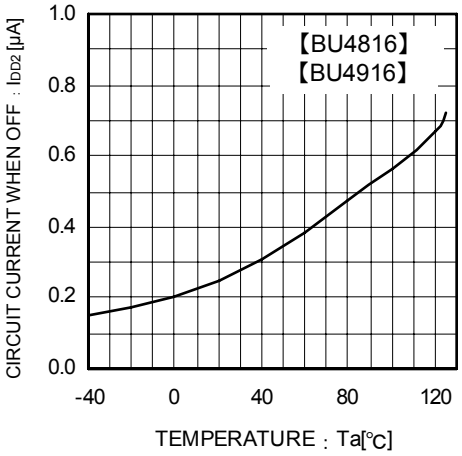

Fig.10 Circuit Current when OFF

© 2014 ROHM Co., Ltd. All rights reserved.

●**Typical Performance Curves – continued**

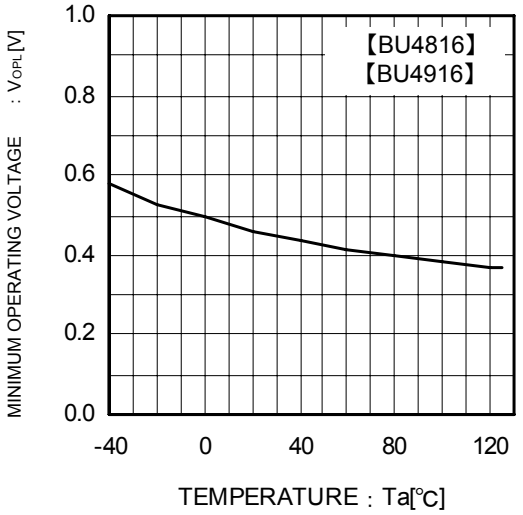

Fig.11 Operating Limit Voltage

© 2014 ROHM Co., Ltd. All rights reserved.

●Application Information

Explanation of Operation

For both the open drain type(Fig.12)and the CMOS output type(Fig.13), the detection and release voltages are used as threshold voltages. When the voltage applied to the VDD pins reaches the applicable threshold voltage, the VOUT terminal voltage switches from either “High” to “Low” or from “Low” to “High”. Because the BU48xx series uses an open drain output type, it is possible to connect a pull-up resistor to VDD or another power supply [The output “High” voltage (VOUT) in this case becomes VDD or the voltage of the other power supply].

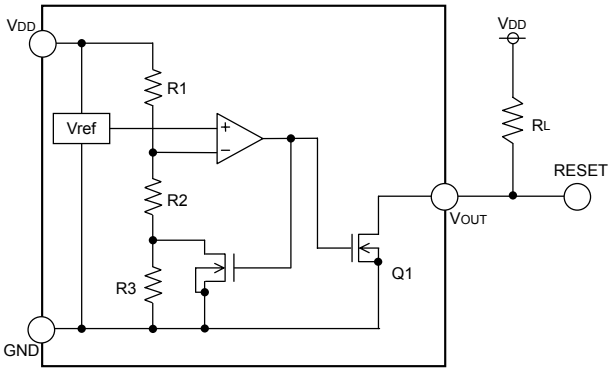

Fig.12 (BU48xx type internal block diagram)

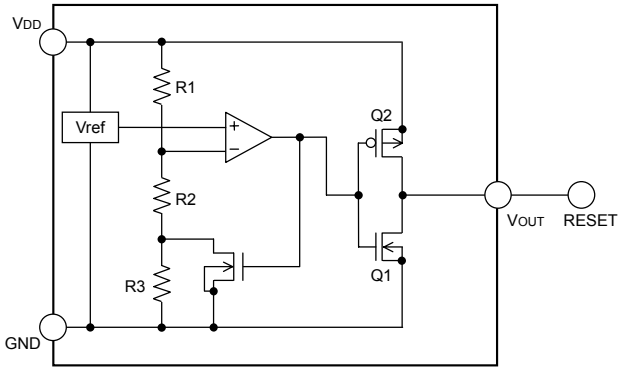

Fig.13 (BU49xx type internal block diagram)

Reference Data

Examples of Output rising value(tPLH)and Output falling value(tPHL)

Part Number	tPLH[μs]	tPHL[μs]
BU4845	23.3	275.9
BU4945	3.5	354.3
	VDD=4.3V→5.1V	VDD=5.1V→4.3V

* This data is for reference only.
This figure will vary with the application, so please confirm actual operation conditions before use.

Timing Waveforms

Example:The following shows the relationship between the input voltage VDD, the C_T Terminal Voltage VCT and the output voltage VOUT when the input power supply voltage VDD is made to sweep up and sweep down (The circuits are those in Fig.12 and 13).

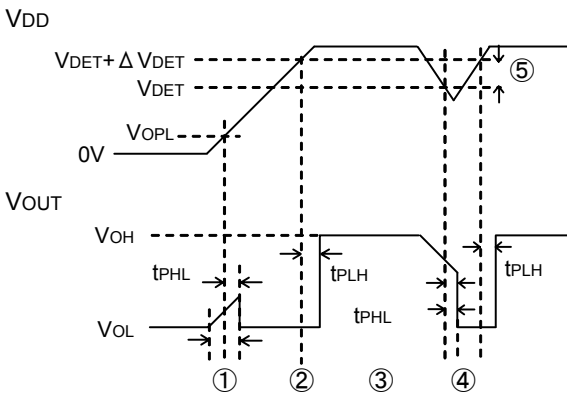

Fig.14 Timing Waveforms

①When the power supply is turned on, the output is unsettled from after over the operating limit voltage (VOPL) until tPHL. Therefore it is possible that the reset signal is not outputted when the rise time of VDD is faster than tPHL.

②When VDD is greater than VOPL but less than the reset release voltage (VDET + VDET), output (VOUT) voltages will switch to L.

③If VDD exceeds the reset release voltage (VDET + VDET), then VOUT switches from L to H (with a delay of tPLH).

④If VDD drops below the detection voltage (VDET) when the power supply is powered down or when there is a power supply fluctuation, VOUT switches to L (with a delay of tPHL).

⑤The potential deference between the detection voltage and the release voltage is known as the hysteresis width (VDET). The system is designed such that the output does not flip-flop with power supply fluctuations within this hysteresis width, preventing malfunctions due to noise.

© 2014 ROHM Co., Ltd. All rights reserved.

●**Circuit Applications**

1) Examples of a common power supply detection reset circuit

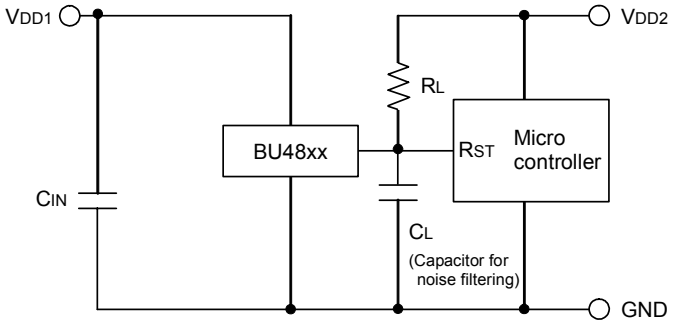

Fig.15 Open Drain Output type

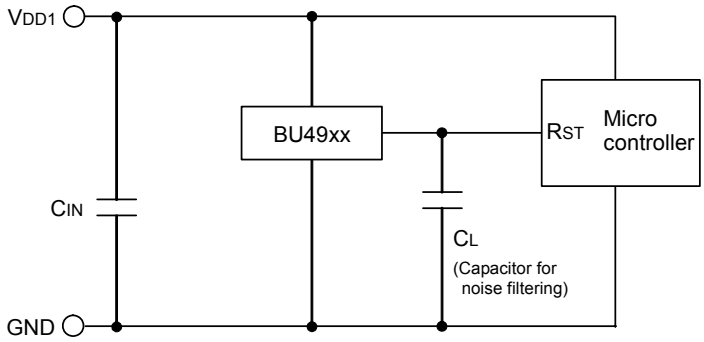

Fig.16 CMOS Output type

Application examples of BU48xx series (Open Drain output type) and BU49xx series (CMOS output type) are shown below.

CASE1:The power supply of the microcontroller (V_{DD2}) differs from the power supply of the reset detection (V_{DD1}). Use the Open Drain Output Type (BU48xx series). Attach a load resistance (R_L) between the output and V_{DD2}. (As shown Fig.15)

CASE2:The power supply of the microcontroller (V_{DD1}) is same as the power supply of the reset detection (V_{DD1}). Use CMOS output type (BU43xx series) or Open Drain Output Type (BU48xx series). Attach a load resistance (R_L) between the output and V_{DD1}. (As shown Fig.16)

When a capacitance C_L for noise filtering for setting the output delay time is connected to the V_{OUT} pin (the reset signal input terminal of the microcontroller), please take into account the waveform of the rise and fall of the output voltage (V_{OUT}).

2) The following is an example of a circuit application in which an OR connection between two types of detection voltage resets the microcontroller.

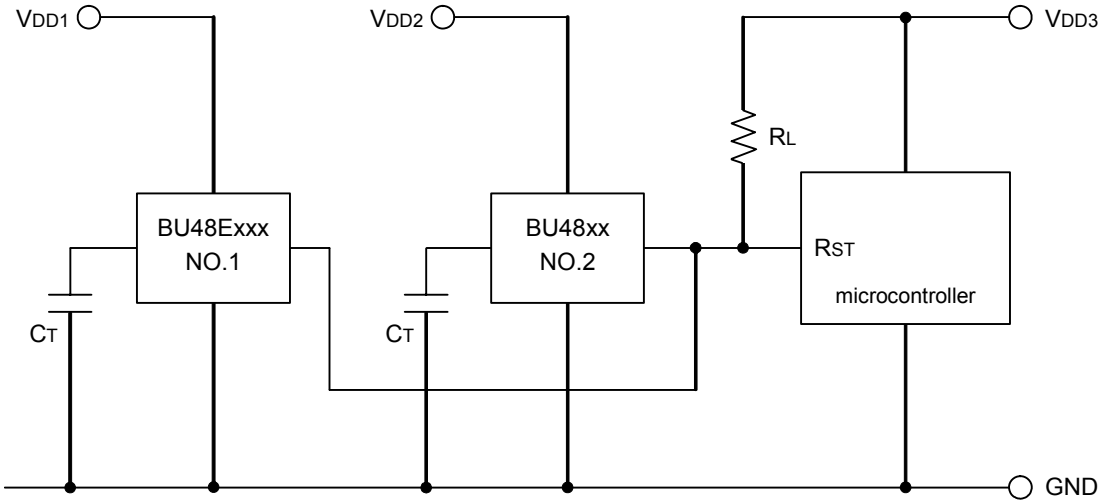

Fig.17

To reset the microcontroller when many independent power supplies are used in the system, OR connect an open drain output type (BU48xx series) to the microcontroller's input with pull-up resistor to the supply voltage of the microcontroller (V_{DD3}) as shown in Fig. 20. By pulling-up to V_{DD3}, output "High" voltage of micro-controller power supply is possible.

© 2014 ROHM Co., Ltd. All rights reserved.

3) Examples of the power supply with resistor dividers
In applications where the power supply input terminal (VDD) of an IC is connected through resistor dividers, it is possible that a through current will momentarily flow into the circuit when the output logic switches, resulting in malfunctions (such as output oscillatory state).
(Through-current is a current that momentarily flows from the power supply (VDD) to ground (GND) when the output level switches from “High” to “Low” or vice versa.)

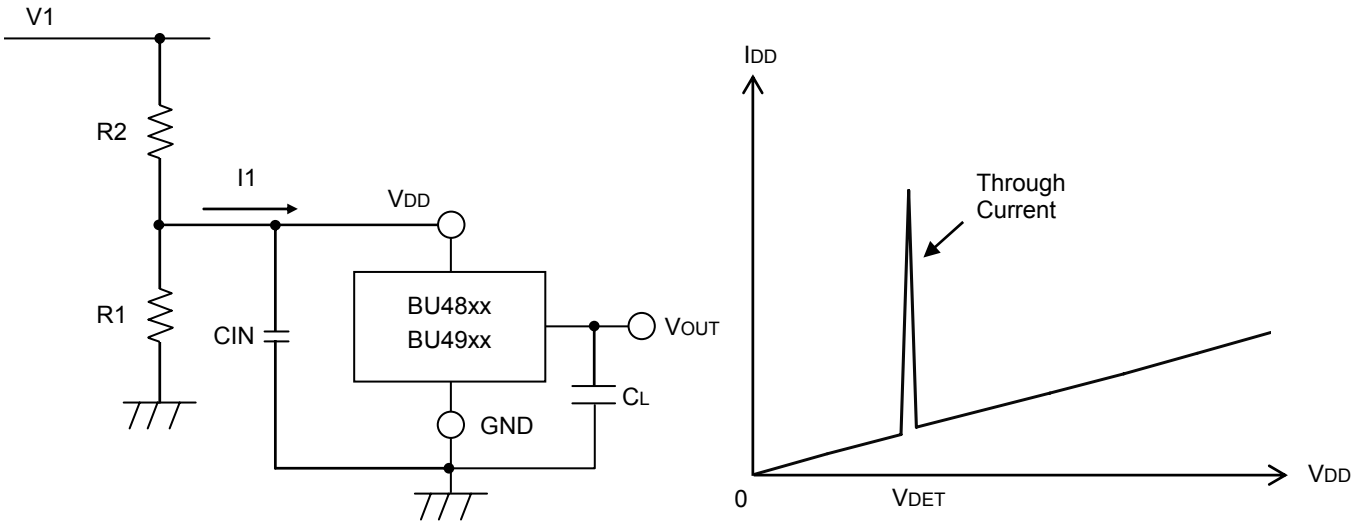

Fig.18

A voltage drop of [the through-current (I1)] × [input resistor (R2)] is caused by the through current, and the input voltage to descends, when the output switches from “Low” to “High”. When the input voltage decreases and falls below the detection voltage, the output voltage switches from “High” to “Low”. At this time, the through-current stops flowing through output “Low”, and the voltage drop is eliminated. As a result, the output switches from “Low” to “High”, which again causes the through current to flow and the voltage drop. This process is repeated, resulting in oscillation.

Consider the use of BD48xx when the power supply input it with resistor dividers.

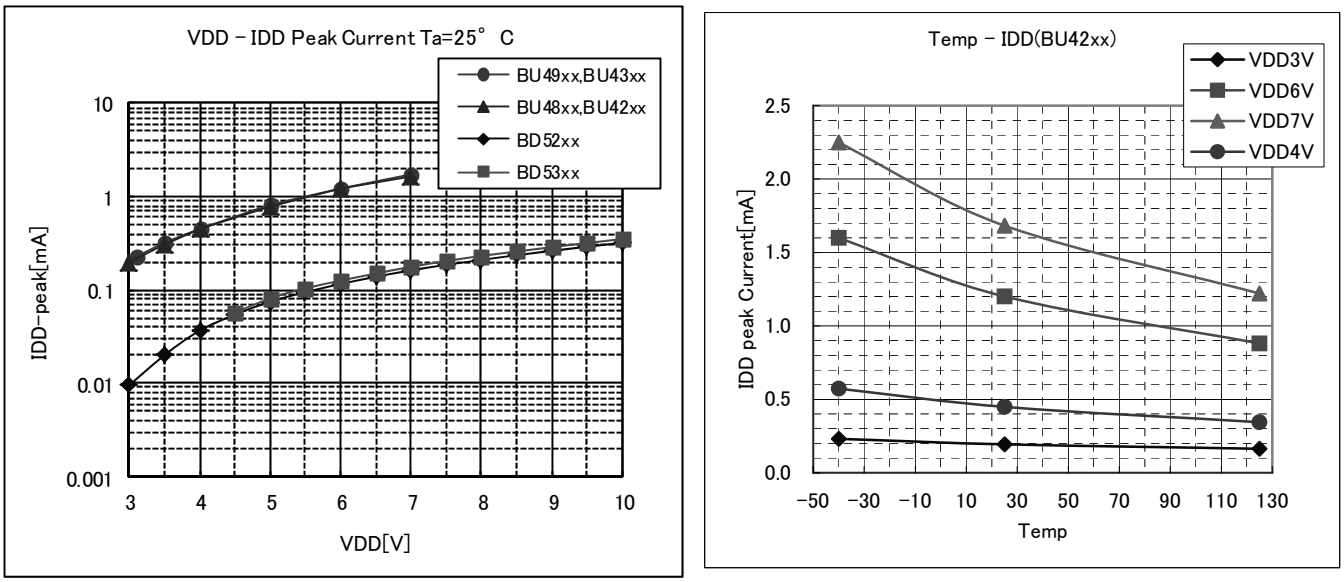

Fig.19 Current Consumption vs. Power Supply Voltage

* This data is for reference only.
The figures will vary with the application, so please confirm actual operating conditions before use.

© 2014 ROHM Co., Ltd. All rights reserved.

●Operational Notes

1) Absolute maximum ratings
Operating the IC over the absolute maximum ratings may damage the IC. The damage can either be a short circuit between pins or an open circuit between pins. Therefore, it is important to consider circuit protection measures, such as adding a fuse, in case the IC is operated over the absolute maximum ratings.

2) Ground Voltage
The voltage of the ground pin must be the lowest voltage of all pins of the IC at all operating conditions. Ensure that no pins are at a voltage below the ground pin at any time, even during transient condition.

3) Recommended operating conditions
These conditions represent a range within which the expected characteristics of the IC can be approximately obtained. The electrical characteristics are guaranteed under the conditions of each parameter.

4) Bypass Capacitor for Noise Rejection
To help reject noise, put a 1μF capacitor between V_{DD} pin and GND and 1000pF capacitor between V_{OUT} pin and GND. Be careful when using extremely big capacitor as transient response will be affected.

5) Short between pins and mounting errors
Be careful when mounting the IC on printed circuit boards. The IC may be damaged if it is mounted in a wrong orientation or if pins are shorted together. Short circuit may be caused by conductive particles caught between the pins.

6) Operation under strong electromagnetic field
Operating the IC in the presence of a strong electromagnetic field may cause the IC to malfunction.

7) The V_{DD} line impedance might cause oscillation because of the detection current.

8) A V_{DD} to GND capacitor (as close connection as possible) should be used in high V_{DD} line impedance condition.

9) Lower than the mininum input voltage puts the V_{OUT} in high impedance state, and it must be V_{DD} in pull up (V_{DD}) condition.

10) External parameters
The case of needless “Delay Time”, recommended to insert more 470kΩ resister between V_{DD} and C_T. The recommended value of R_L Resistor is over 10kΩ to 1MΩ for V_{DET}=1.5V to 4.8V, and over 100kΩ to 1MΩ for V_{DET}=0.9V to 1.4V. The recommended value of C_T Capacitor is over 100pF to 0.1μF. There are many factors (board layout, etc) that can affect characteristics. Please verify and confirm using practical applications.

11) Power on reset operation
Please note that the power on reset output varies with the V_{DD} rise time. Please verify the behavior in the actual operation.

12) Testing on application boards
When testing the IC on an application board, connecting a capacitor directly to a low-impedance output pin may subject the IC to stress. Always discharge capacitors completely after each process or step. The IC’s power supply should always be turned off completely before connecting or removing it from the test setup during the inspection process. To prevent damage from static discharge, ground the IC during assembly and use similar precautions during transport and storage.

13) Rush current
When power is first supplied to the IC, rush current may flow instantaneously. It is possible that the charge current to the parasitic capacitance of internal photo diode or the internal logic may be unstable. Therefore, give special consideration to power coupling capacitance, power wiring, width of GND wiring, and routing of connections.

14) C_T pin discharge
Due to the capabilities of the C_T pin discharge transistor, the C_T pin may not completely discharge when a short input pulse is applied, and in this case the delay time may not be controlled. Please verify the actual operation.

15) This IC has extremely high impedance terminals. Small leak current due to the uncleanness of PCB surface might cause unexpected operations. Application values in these conditions should be selected carefully. If 10MΩ leakage is assumed between the C_T terminal and the GND terminal, 1MΩ connection between the CT terminal and the V_{DD} terminal would be recommended. Also, if the leakage is assumed between the Vout terminal and the GND terminal, the pull up resistor should be less than 1/10 of the assumed leak resistance. The value of Rct depends on the external resistor that is connected to C_T terminal, so please consider the delay time that is decided by $t \times R_{CT} \times C_{CT}$ changes.

.

© 2014 ROHM Co., Ltd. All rights reserved.

Physical Dimension, Tape and Reel Information

Package Name	SSOP5

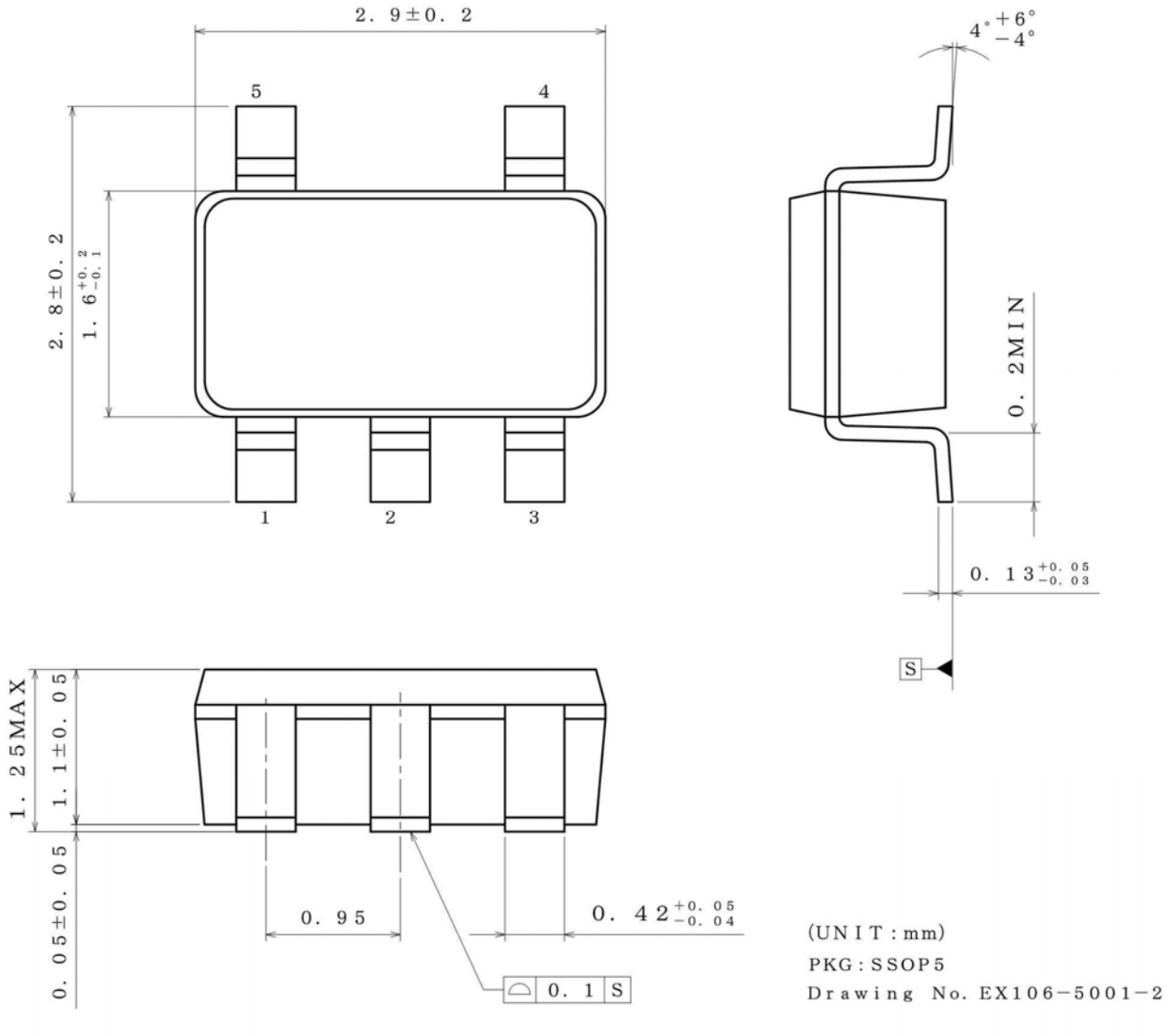

< Tape and Reel Information >

Tape	Embossed carrier tape
Quantity	3000pcs
Direction of feed	TL (The direction is the 1pin of product is at the lower left when you hold reel on the left hand and you pull out the tape on the right hand)

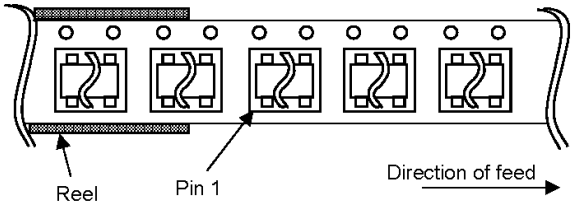

© 2014 ROHM Co., Ltd. All rights reserved.

Physical Dimension, Tape and Reel Information

Package Name	SOP4

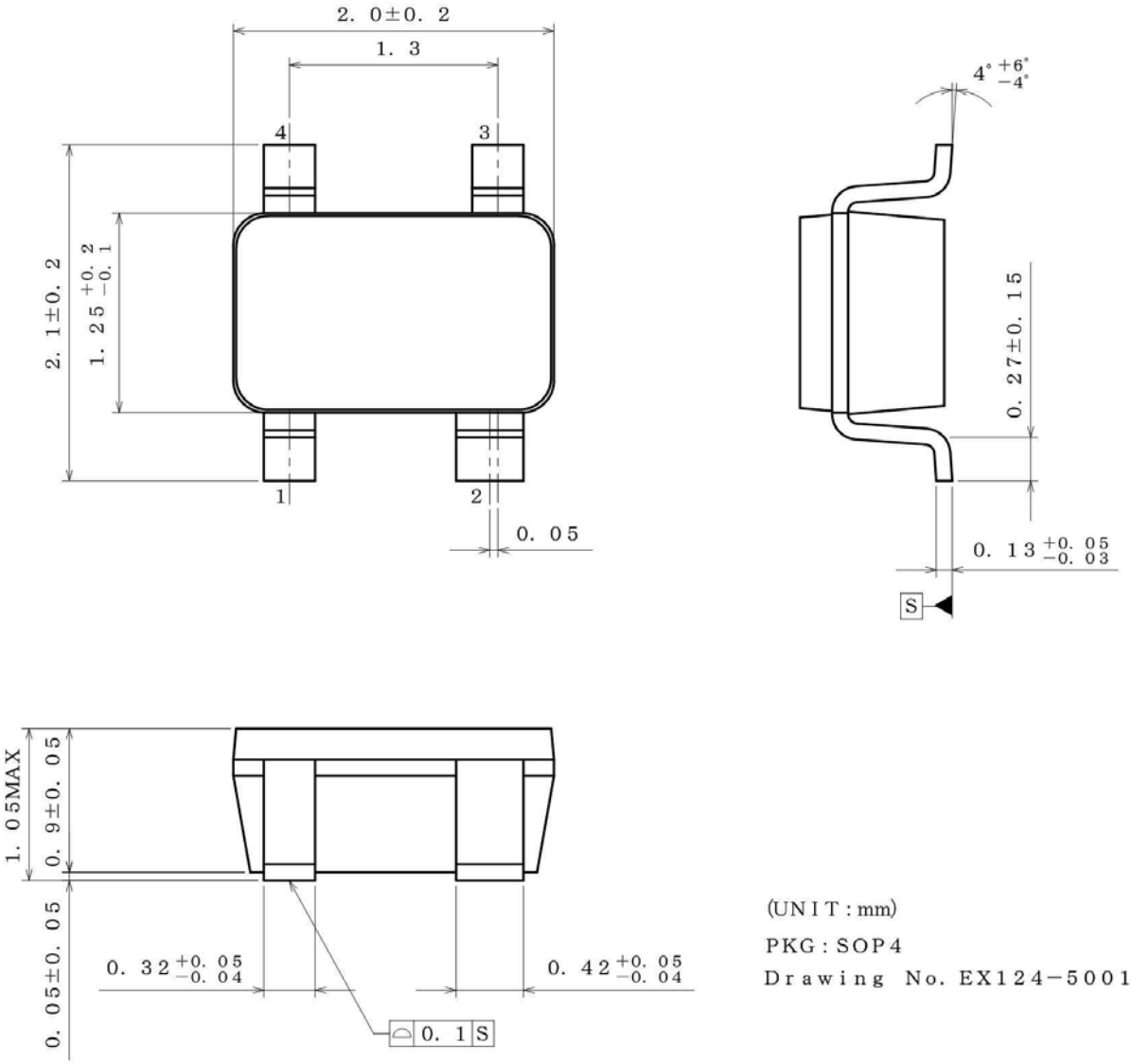

<Tape and Reel information>

Tape	Embossed carrier tape
Quantity	3000pcs
Direction of feed	TR (The direction is the 1pin of product is at the upper right when you hold reel on the left hand and you pull out the tape on the right hand)

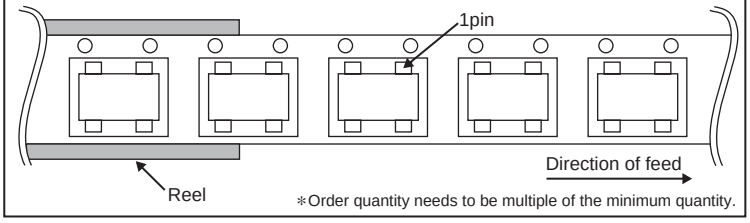

∗Order quantity needs to be multiple of the minimum quantity.

© 2014 ROHM Co., Ltd. All rights reserved.

Physical Dimension, Tape and Reel Information

Package Name	VSOF5

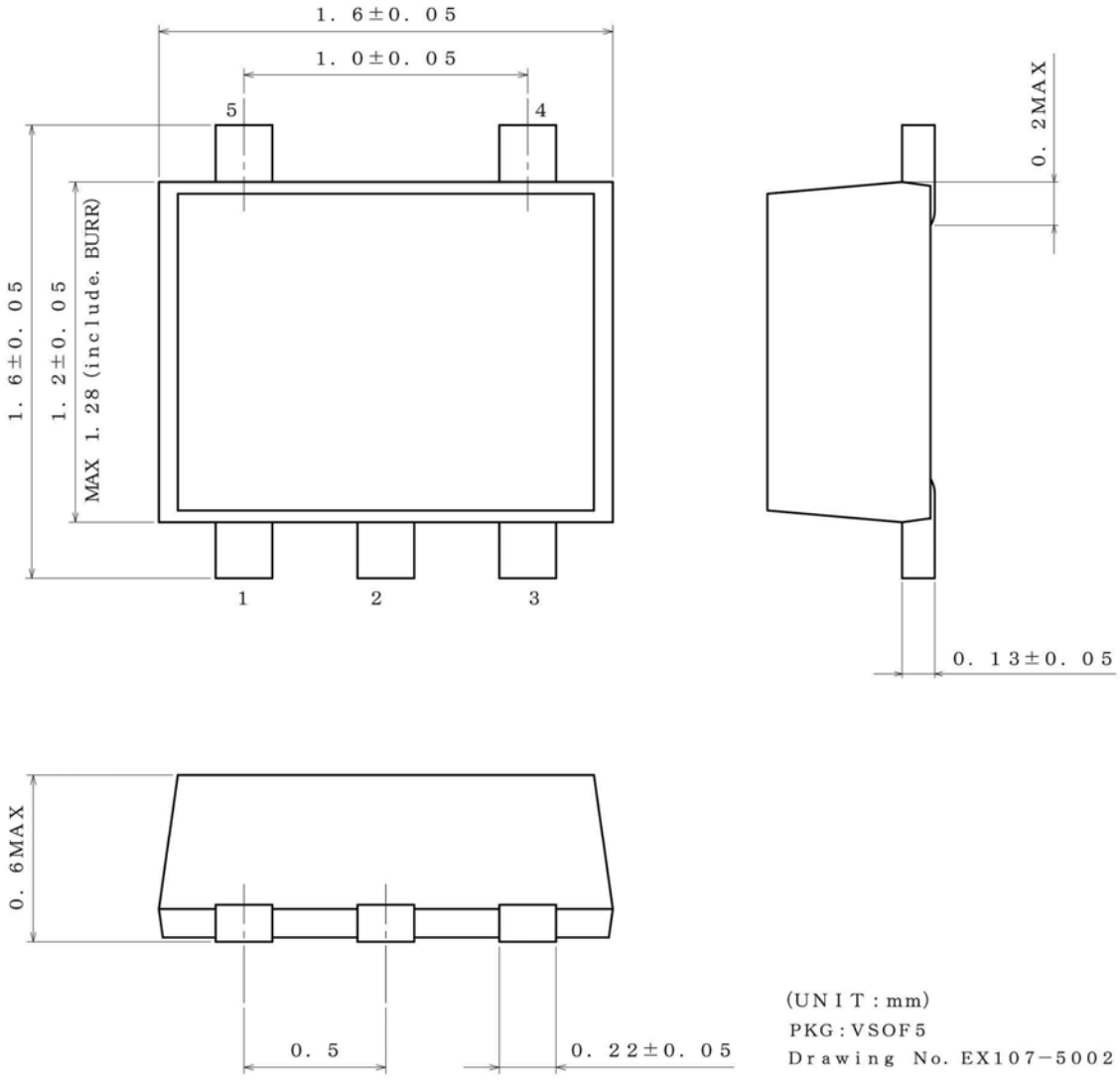

<Tape and Reel information>

Tape	Embossed carrier tape
Quantity	3000pcs
Direction of feed	TR (The direction is the 1pin of product is at the upper right when you hold reel on the left hand and you pull out the tape on the right hand)

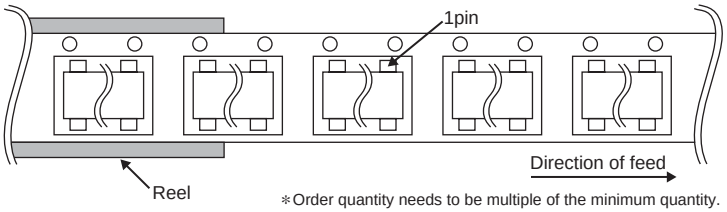

∗Order quantity needs to be multiple of the minimum quantity.

© 2014 ROHM Co., Ltd. All rights reserved.

Notice

Precaution on using ROHM Products

1. Our Products are designed and manufactured for application in ordinary electronic equipments (such as AV equipment, OA equipment, telecommunication equipment, home electronic appliances, amusement equipment, etc.). If you intend to use our Products in devices requiring extremely high reliability (such as medical equipment (Note 1), transport equipment, traffic equipment, aircraft/spacecraft, nuclear power controllers, fuel controllers, car equipment including car accessories, safety devices, etc.) and whose malfunction or failure may cause loss of human life, bodily injury or serious damage to property ("Specific Applications"), please consult with the ROHM sales representative in advance. Unless otherwise agreed in writing by ROHM in advance, ROHM shall not be in any way responsible or liable for any damages, expenses or losses incurred by you or third parties arising from the use of any ROHM's Products for Specific Applications.

(Note1) Medical Equipment Classification of the Specific Applications

JAPAN	USA	EU	CHINA
CLASSⅢ	CLASSⅢ	CLASSⅡb	CLASSⅢ
CLASSⅣ		CLASSⅢ	

2. ROHM designs and manufactures its Products subject to strict quality control system. However, semiconductor products can fail or malfunction at a certain rate. Please be sure to implement, at your own responsibilities, adequate safety measures including but not limited to fail-safe design against the physical injury, damage to any property, which a failure or malfunction of our Products may cause. The following are examples of safety measures:
   [a] Installation of protection circuits or other protective devices to improve system safety
   [b] Installation of redundant circuits to reduce the impact of single or multiple circuit failure

3. Our Products are designed and manufactured for use under standard conditions and not under any special or extraordinary environments or conditions, as exemplified below. Accordingly, ROHM shall not be in any way responsible or liable for any damages, expenses or losses arising from the use of any ROHM's Products under any special or extraordinary environments or conditions. If you intend to use our Products under any special or extraordinary environments or conditions (as exemplified below), your independent verification and confirmation of product performance, reliability, etc, prior to use, must be necessary:
   [a] Use of our Products in any types of liquid, including water, oils, chemicals, and organic solvents
   [b] Use of our Products outdoors or in places where the Products are exposed to direct sunlight or dust
   [c] Use of our Products in places where the Products are exposed to sea wind or corrosive gases, including Cl_2, H_2S, NH_3, SO_2, and NO_2
   [d] Use of our Products in places where the Products are exposed to static electricity or electromagnetic waves
   [e] Use of our Products in proximity to heat-producing components, plastic cords, or other flammable items
   [f] Sealing or coating our Products with resin or other coating materials
   [g] Use of our Products without cleaning residue of flux (even if you use no-clean type fluxes, cleaning residue of flux is recommended); or Washing our Products by using water or water-soluble cleaning agents for cleaning residue after soldering
   [h] Use of the Products in places subject to dew condensation

4. The Products are not subject to radiation-proof design.

5. Please verify and confirm characteristics of the final or mounted products in using the Products.

6. In particular, if a transient load (a large amount of load applied in a short period of time, such as pulse. is applied, confirmation of performance characteristics after on-board mounting is strongly recommended. Avoid applying power exceeding normal rated power; exceeding the power rating under steady-state loading condition may negatively affect product performance and reliability.

7. De-rate Power Dissipation (Pd) depending on Ambient temperature (Ta). When used in sealed area, confirm the actual ambient temperature.

8. Confirm that operation temperature is within the specified range described in the product specification.

9. ROHM shall not be in any way responsible or liable for failure induced under deviant condition from what is defined in this document.

Precaution for Mounting / Circuit board design

1. When a highly active halogenous (chlorine, bromine, etc.) flux is used, the residue of flux may negatively affect product performance and reliability.

2. In principle, the reflow soldering method must be used on a surface-mount products, the flow soldering method must be used on a through hole mount products. If the flow soldering method is preferred on a surface-mount products, please consult with the ROHM representative in advance.

For details, please refer to ROHM Mounting specification

© 2013 ROHM Co., Ltd. All rights reserved.

Precautions Regarding Application Examples and External Circuits

1. If change is made to the constant of an external circuit, please allow a sufficient margin considering variations of the characteristics of the Products and external components, including transient characteristics, as well as static characteristics.

2. You agree that application notes, reference designs, and associated data and information contained in this document are presented only as guidance for Products use. Therefore, in case you use such information, you are solely responsible for it and you must exercise your own independent verification and judgment in the use of such information contained in this document. ROHM shall not be in any way responsible or liable for any damages, expenses or losses incurred by you or third parties arising from the use of such information.

Precaution for Electrostatic

This Product is electrostatic sensitive product, which may be damaged due to electrostatic discharge. Please take proper caution in your manufacturing process and storage so that voltage exceeding the Products maximum rating will not be applied to Products. Please take special care under dry condition (e.g. Grounding of human body / equipment / solder iron, isolation from charged objects, setting of Ionizer, friction prevention and temperature / humidity control).

Precaution for Storage / Transportation

1. Product performance and soldered connections may deteriorate if the Products are stored in the places where:
   [a] the Products are exposed to sea winds or corrosive gases, including Cl2, H2S, NH3, SO2, and NO2
   [b] the temperature or humidity exceeds those recommended by ROHM
   [c] the Products are exposed to direct sunshine or condensation
   [d] the Products are exposed to high Electrostatic

2. Even under ROHM recommended storage condition, solderability of products out of recommended storage time period may be degraded. It is strongly recommended to confirm solderability before using Products of which storage time is exceeding the recommended storage time period.

3. Store / transport cartons in the correct direction, which is indicated on a carton with a symbol. Otherwise bent leads may occur due to excessive stress applied when dropping of a carton.

4. Use Products within the specified time after opening a humidity barrier bag. Baking is required before using Products of which storage time is exceeding the recommended storage time period.

Precaution for Product Label

QR code printed on ROHM Products label is for ROHM's internal use only.

Precaution for Disposition

When disposing Products please dispose them properly using an authorized industry waste company.

Precaution for Foreign Exchange and Foreign Trade act

Since our Products might fall under controlled goods prescribed by the applicable foreign exchange and foreign trade act, please consult with ROHM representative in case of export.

Precaution Regarding Intellectual Property Rights

1. All information and data including but not limited to application example contained in this document is for reference only. ROHM does not warrant that foregoing information or data will not infringe any intellectual property rights or any other rights of any third party regarding such information or data. ROHM shall not be in any way responsible or liable for infringement of any intellectual property rights or other damages arising from use of such information or data.:

2. No license, expressly or implied, is granted hereby under any intellectual property rights or other rights of ROHM or any third parties with respect to the information contained in this document.

Other Precaution

1. This document may not be reprinted or reproduced, in whole or in part, without prior written consent of ROHM.

2. The Products may not be disassembled, converted, modified, reproduced or otherwise changed without prior written consent of ROHM.

3. In no event shall you use in any way whatsoever the Products and the related technical information contained in the Products or this document for any military purposes, including but not limited to, the development of mass-destruction weapons.

4. The proper names of companies or products described in this document are trademarks or registered trademarks of ROHM, its affiliated companies or third parties.

© 2013 ROHM Co., Ltd. All rights reserved.

General Precaution

1. Before you use our Products, you are requested to carefully read this document and fully understand its contents. ROHM shall not be in any way responsible or liable for failure, malfunction or accident arising from the use of any ROHM's Products against warning, caution or note contained in this document.

2. All information contained in this document is current as of the issuing date and subject to change without any prior notice. Before purchasing or using ROHM's Products, please confirm the latest information with a ROHM sales representative.

3. The information contained in this document is provided on an "as is" basis and ROHM does not warrant that all information contained in this document is accurate and/or error-free. ROHM shall not be in any way responsible or liable for any damages, expenses or losses incurred by you or third parties resulting from inaccuracy or errors of or concerning such information.

© 2014 ROHM Co., Ltd. All rights reserved.

ООО «ЛайфЭлектроникс» “LifeElectronics” LLC

ИНН 7805602321 КПП 780501001 Р/С 40702810122510004610 ФАКБ "АБСОЛЮТ БАНК" (ЗАО) в г.Санкт-Петербурге К/С 30101810900000000703 БИК 044030703

Компания «Life Electronics» занимается поставками электронных компонентов импортного и отечественного производства от производителей и со складов крупных дистрибьюторов Европы, Америки и Азии.

С конца 2013 года компания активно расширяет линейку поставок компонентов по направлению коаксиальный кабель, кварцевые генераторы и конденсаторы (керамические, пленочные, электролитические), за счёт заключения дистрибьюторских договоров

Мы предлагаем:

- *Конкурентоспособные цены и скидки постоянным клиентам.*
- *Специальные условия для постоянных клиентов.*
- *Подбор аналогов.*
- *Поставку компонентов в любых объемах, удовлетворяющих вашим потребностям.*

- *Приемлемые сроки поставки, возможна ускоренная поставка.*
- *Доставку товара в любую точку России и стран СНГ.*
- *Комплексную поставку.*
- *Работу по проектам и поставку образцов.*
- *Формирование склада под заказчика.*

- *Сертификаты соответствия на поставляемую продукцию (по желанию клиента).*
- *Тестирование поставляемой продукции.*
- *Поставку компонентов, требующих военную и космическую приемку.*
- *Входной контроль качества.*
- *Наличие сертификата ISO.*

В составе нашей компании организован Конструкторский отдел, призванный помогать разработчикам, и инженерам.

Конструкторский отдел помогает осуществить:

- *Регистрацию проекта у производителя компонентов.*
- *Техническую поддержку проекта.*
- *Защиту от снятия компонента с производства.*
- *Оценку стоимости проекта по компонентам.*
- *Изготовление тестовой платы монтаж и пусконаладочные работы.*

Тел: +7 (812) 336 43 04 (многоканальный)
Email: org@lifeelectronics.ru

www.lifeelectronics.ru