XC6101 ~ XC6107, XC6111 ~ XC6117 Series

Voltage Detector (VDF=1.6V~5.0V)

Preliminary

- ◆CMOS Voltage Detector
- ◆Manual Reset Input
- ◆Watchdog Functions
- ◆Built-in Delay Circuit
- ◆Detect Voltage Range: 1.6~5.0V, ± 2%
- ◆Reset Function is Selectable
  VDFL (Low When Detected)
  VDFH (High When Detected)

■GENERAL DESCRIPTION

The XC6101~XC6107, XC6111~XC6117 series are groups of high-precision, low current consumption voltage detectors with manual reset input function and watchdog functions incorporating CMOS process technology. The series consist of a reference voltage source, delay circuit, comparator, and output driver.
With the built-in delay circuit, the XC6101 ~ XC6107, XC6111 ~ XC6117 series' ICs do not require any external components to output signals with release delay time. Moreover, with the manual reset function, reset can be asserted at any time. The ICs produce two types of output; VDFL (low when detected) and VDFH (high when detected).
With the XC6101 ~ XC6105, XC6111 ~ XC6115 series' ICs, the WD pin can be left open if the watchdog function is not used.
Whenever the watchdog pin is opened, the internal counter clears before the watchdog timeout occurs. Since the manual reset pin is internally pulled up to the VIN pin voltage level, the ICs can be used with the manual reset pin left unconnected if the pin is unused.
The detect voltages are internally fixed 1.6V ~ 5.0V in increments of 100mV, using laser trimming technology.
Six watchdog timeout period settings are available in a range from 6.25msec to 1.6sec.
Seven release delay time 1 are available in a range from 3.13msec to 1.6sec.

■APPLICATIONS

- ●Microprocessor reset circuits
- ●Memory battery backup circuits
- ●System power-on reset circuits
- ●Power failure detection

■FEATURES

Detect Voltage Range	: 1.6V ~ 5.0V, ±2% (100mV increments)
Hysteresis Range	: VDF x 5%, TYP. (XC6101~XC6107) VDF x 0.1%, TYP. (XC6111~XC6117)
Operating Voltage Range	: 1.0V ~ 6.0V
Detect Voltage Temperature Characteristics	: ±100ppm/°C (TYP.)
Output Configuration	: N-channel open drain, CMOS
Watchdog Pin	: Watchdog input If watchdog input maintains 'H' or 'L' within the watchdog timeout period, a reset signal is output to the RESET output pin
Manual Reset Pin	: When driven 'H' to 'L' level signal, the MRB pin voltage asserts forced reset on the output pin.
Release Delay Time	: 1.6sec, 400msec, 200msec, 100msec, 50msec, 25msec, 3.13msec (TYP.) can be selectable.
Watchdog Timeout Period	: 1.6sec, 400msec, 200msec, 100msec, 50msec, 6.25msec (TYP.) can be selectable.

■TYPICAL APPLICATION CIRCUIT

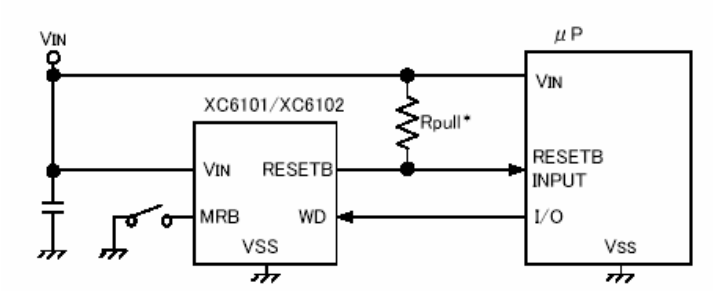

* Not necessary with CMOS output products.

■TYPICAL PERFORMANCE CHARACTERISTICS

●Supply Current vs. Input Voltage

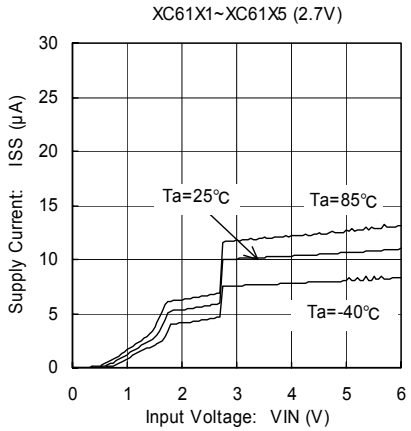

* 'x' represents both '0' and '1'. (ex. XC61x1⇒XC6101 and XC6111)

■PIN CONFIGURATION

●SOT-25

XC6101, XC6102 Series
XC6111, XC6112 Series

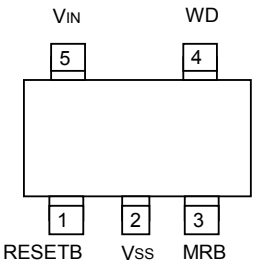

SOT-25 (TOP VIEW)

XC6103 & XC6113 Series

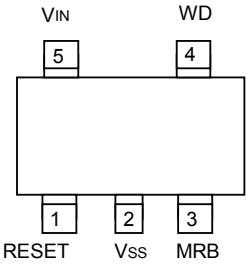

SOT-25 (TOP VIEW)

XC6104, XC6105 Series
XC6114, XC6115 Series

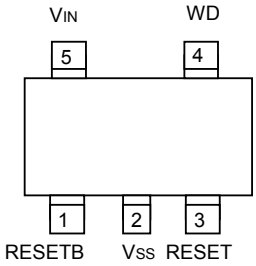

SOT-25 (TOP VIEW)

XC6106, XC6107 Series
XC6116, XC6117 Series

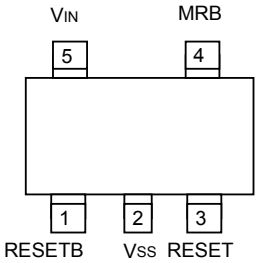

SOT-25 (TOP VIEW)

●USP-6C

XC6101, XC6102 Series
XC6111, XC6112 Series

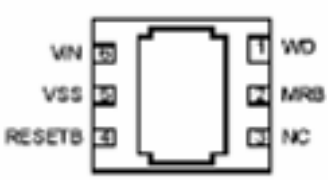

USP-6C (BOTTOM VIEW)

XC6103 & XC6113 Series

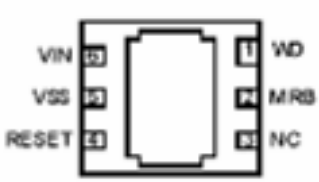

USP-6C (BOTTOM VIEW)

XC6104, XC6105 Series
XC6114, XC6115 Series

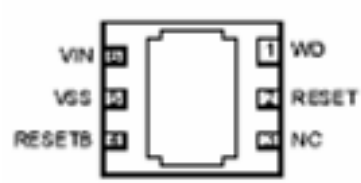

USP-6C (BOTTOM VIEW)

XC6106, XC6107 Series
XC6116, XC6117 Series

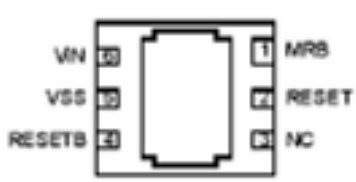

USP-6C (BOTTOM VIEW)

* The dissipation pad for the USP-6C package should be solder-plated in recommended mount pattern and metal masking so as to enhance mounting strength and heat release. If the pad needs to be connected to other pins, it should be connected to the VSS pin.

■PIN ASSIGNMENT

PIN NUMBER								PIN NAME	FUNCTION
XC6101, XC6102		XC6103		XC6104, XC6105		XC6106, XC6107			
XC6111, XC6112		XC6113		XC6114, XC6115		XC6116, XC6117			
SOT-25	USP-6C	SOT-25	USP-6C	SOT-25	USP-6C	SOT-25	USP-6C		
1	4	-	-	1	4	1	4	RESETB	Reset Output (VDFL: Low Level When Detected)
2	5	2	5	2	5	2	5	VSS	Ground
3	2	3	2	-	-	4	1	MRB	Manual Reset
4	1	4	1	4	1	-	-	WD	Watchdog
5	6	5	6	5	6	5	6	VIN	Power Input
-	-	1	4	3	2	3	2	RESET	Reset Output (VDFH: High Level When Detected)

■PRODUCT CLASSIFICATION

●Selection Guide

SERIES		WATCHDOG	MANUAL RESET	RESET OUTPUT	
				VDFL (RESETB)	VDFH (RESET)
XC6101	XC6111	Available	Available	CMOS	-
XC6102	XC6112	Available	Available	N-channel open drain	-
XC6103	XC6113	Available	Available	-	CMOS
XC6104	XC6114	Available	Not Available	CMOS	CMOS
XC6105	XC6115	Available	Not Available	N-channel open drain	CMOS
XC6106	XC6116	Not Available	Available	CMOS	CMOS
XC6107	XC6117	Not Available	Available	N-channel open drain	CMOS

●Ordering Information

XC61①②③④⑤⑥⑦⑧

DESIGNATOR	DESCRIPTION	SYMBOL	DESCRIPTION
①	Hysteresis Range	0	: VDF x 5% (TYP.) with hysteresis
		1	: VDF x 0.1% (TYP.) without hysteresis
②	Functions and Type of Reset Output	1 ~ 7	: Watchdog and manual functions, and reset output type as per Selection Guide in the above chart
③	Release Delay Time *	A	: 3.13msec (TYP.)
		B	: 25msec (TYP.)
		C	: 50msec (TYP.)
		D	: 100msec (TYP.)
		E	: 200msec (TYP.)
		F	: 400msec (TYP.)
		H	: 1.6sec (TYP.)
④	Watchdog Timeout Period	0	: No WD timeout period for XC6106, XC6107, XC6116, XC6117 Series
		1	: 6.25msec (TYP.)
		2	: 50msec (TYP.)
		3	: 100msec (TYP.)
		4	: 200msec (TYP.)
		5	: 400msec (TYP.)
		6	: 1.6sec (TYP.)
⑤⑥	Detect Voltage	16 ~ 50	: Detect voltage ex.) 4.5V: ⑤⇒4, ⑥⇒5
⑦	Package	M	: SOT-25
		E	: USP-6C
⑧	Device Orientation	R	: Embossed tape, standard feed
		L	: Embossed tape, reverse feed

* Please set the release delay time shorter than or equal to the watchdog timeout period.
ex.) XC6101D427MR or XC6101D327MR

■PACKAGING INFORMATION

●SOT-25

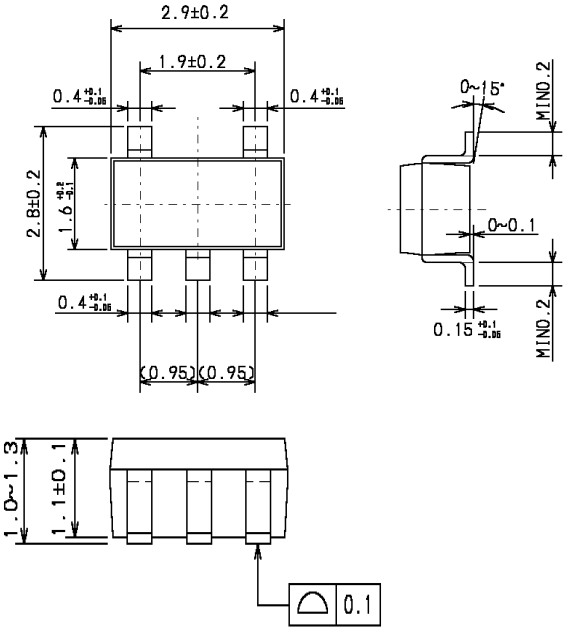

●USP-6C

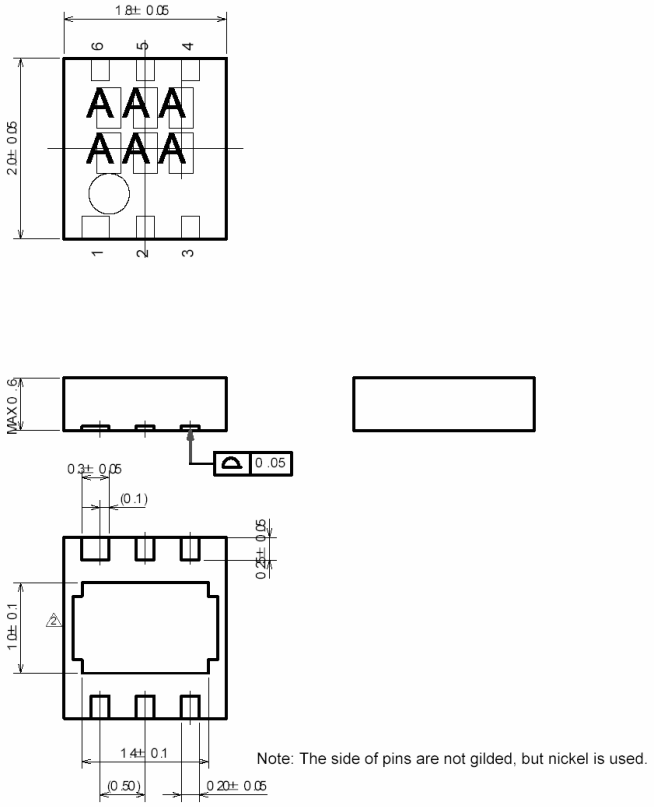

Note: The side of pins are not gilded, but nickel is used.

■MARKING RULE

●SOT-25

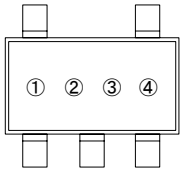

SOT-25
(TOP VIEW)

① Represents product series

MARK	PRODUCT SERIES	MARK	PRODUCT SERIES
0	XC6101xxxxxx	7	XC6111xxxxxx
1	XC6102xxxxxx	8	XC6112xxxxxx
2	XC6103xxxxxx	9	XC6113xxxxxx
3	XC6104xxxxxx	A	XC6114xxxxxx
4	XC6105xxxxxx	B	XC6115xxxxxx
5	XC6106xxxxxx	C	XC6116xxxxxx
6	XC6107xxxxxx	D	XC6117xxxxxx

② Represents release delay time and watchdog timeout period

MARK	RELEASE DELAY TIME	WATCH DOG TIMEOUT PERIOD	PRODUCT SERIES	MARK	RELEASE DELAY TIME	WATCH DOG TIMEOUT PERIOD	PRODUCT SERIES
A	3.13msec	XC61X6, XC61X7 series	XC61xxA0xxxx	E	50msec	400msec	XC61xxC5xxxx
0	3.13msec	6.25msec	XC61xxA1xxxx	F	50msec	1.6sec	XC61xxC6xxxx
1	3.13msec	50msec	XC61xxA2xxxx	D	100msec	XC61X6, XC61X7 series	XC61xxD0xxxx
2	3.13msec	100msec	XC61xxA3xxxx	H	100msec	100msec	XC61xxD3xxxx
3	3.13msec	200msec	XC61xxA4xxxx	K	100msec	200msec	XC61xxD4xxxx
4	3.13msec	400msec	XC61xxA5xxxx	L	100msec	400msec	XC61xxD5xxxx
5	3.13msec	1.6sec	XC61xxA6xxxx	M	100msec	1.6sec	XC61xxD6xxxx
B	25msec	XC61X6, XC61X7 series	XC61xxB0xxxx	E	200msec	XC61X6, XC61X7 series	XC61xxE0xxxx
6	25msec	50msec	XC61xxB2xxxx	P	200msec	200msec	XC61xxE4xxxx
7	25msec	100msec	XC61xxB3xxxx	R	200msec	400msec	XC61xxE5xxxx
8	25msec	200msec	XC61xxB4xxxx	S	200msec	1.6sec	XC61xxE6xxxx
9	25msec	400msec	XC61xxB5xxxx	F	400msec	XC61X6, XC61X7 series	XC61xxF0xxxx
A	25msec	1.6sec	XC61xxB6xxxx	T	400msec	400msec	XC61xxF5xxxx
C	50msec	XC61X6, XC61X7 series	XC61xxC0xxxx	U	400msec	1.6sec	XC61xxF6xxxx
B	50msec	50msec	XC61xxC2xxxx	H	1.6sec	XC61X6, XC61X7 series	XC61xxH0xxxx
C	50msec	100msec	XC61xxC3xxxx	V	1.6sec	1.6sec	XC61xxH6xxxx
D	50msec	200msec	XC61xxC4xxxx				

③ Represents detect voltage

MARK	DETECT VOLTAGE	PRODUCT SERIES	MARK	DETECT VOLTAGE	PRODUCT SERIES
F	1.6	XC61Xxxx16xx	3	3.4	XC61Xxxx34xx
H	1.7	XC61Xxxx17xx	4	3.5	XC61Xxxx35xx
K	1.8	XC61Xxxx18xx	5	3.6	XC61Xxxx36xx
L	1.9	XC61Xxxx19xx	6	3.7	XC61Xxxx37xx
M	2.0	XC61Xxxx20xx	7	3.8	XC61Xxxx38xx
N	2.1	XC61Xxxx21xx	8	3.9	XC61Xxxx39xx
P	2.2	XC61Xxxx22xx	9	4.0	XC61Xxxx40xx
R	2.3	XC61Xxxx23xx	A	4.1	XC61Xxxx41xx
S	2.4	XC61Xxxx24xx	B	4.2	XC61Xxxx42xx
T	2.5	XC61Xxxx25xx	C	4.3	XC61Xxxx43xx
U	2.6	XC61Xxxx26xx	D	4.4	XC61Xxxx44xx
V	2.7	XC61Xxxx27xx	E	4.5	XC61Xxxx45xx
X	2.8	XC61Xxxx28xx	F	4.6	XC61Xxxx46xx
Y	2.9	XC61Xxxx29xx	H	4.7	XC61Xxxx47xx
Z	3.0	XC61Xxxx30xx	K	4.8	XC61Xxxx48xx
0	3.1	XC61Xxxx31xx	L	4.9	XC61Xxxx49xx
1	3.2	XC61Xxxx32xx	M	5.0	XC61Xxxx50xx
2	3.3	XC61Xxxx33xx			

④ Represents production lot number
0 to 9 and A to Z and inverted 0 to 9 and A to Z repeated. (G, I, J, O, Q, W expected.)
* ‘X’ represents both ‘0’ and ‘1’. (ex. XC61X1⇒XC6101 and XC6111)

■MARKING RULE (Continued)

●USP-6C

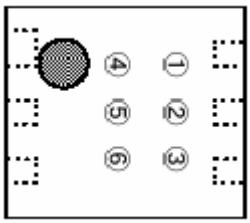

USP-6C
(TOP VIEW)

① Represents product series

MARK	PRODUCT SERIES	MARK	PRODUCT SERIES
3	XC6101xxxxxx	8	XC6111xxxxxx
4	XC6102xxxxxx	9	XC6112xxxxxx
5	XC6103xxxxxx	A	XC6113xxxxxx
6	XC6104xxxxxx	B	XC6114xxxxxx
7	XC6105xxxxxx	C	XC6115xxxxxx
3	XC6106xxxxxx	8	XC6116xxxxxx
4	XC6107xxxxxx	9	XC6117xxxxxx

② Represents release delay time

MARK	RELEASE DELAY TIME	PRODUCT SERIES
A	3.13msec	XC61XxAxxxxx
B	25msec	XC61XxBxxxxx
C	50msec	XC61XxCxxxxx
D	100msec	XC61XxDxxxxx
E	200msec	XC61XxExxxxx
F	400msec	XC61XxFxxxxx
H	1.6sec	XC61XxHxxxxx

③ Represents watchdog timeout period

MARK	WATCHDOG TIMEOUT PERIOD	PRODUCT SERIES
0	XC61X6, XC61X7 series	XC61Xxx0xxxx
1	6.25msec	XC61Xxx1xxxx
2	50msec	XC61Xxx2xxxx
3	100msec	XC61Xxx3xxxx
4	200msec	XC61Xxx4xxxx
5	400msec	XC61Xxx5xxxx
6	1.6sec	XC61Xxx6xxxx

④⑤ Represents detect voltage

MARK		DETECT VOLTAGE (V)	PRODUCT SERIES
④	⑤		
3	3	3.3	XC61Xxxx33xx
5	0	5.0	XC61Xxxx50xx

⑥ Represents production lot number
0 to 9 and A to Z repeated. (G, I, J, O, Q, W excepted.)
* No character inversion used.
** ‘X’ represents both ‘0’ and ‘1’. (ex. XC61X1⇒XC6101 and XC6111)

■BLOCK DIAGRAMS

●XC6101, XC6111 Series

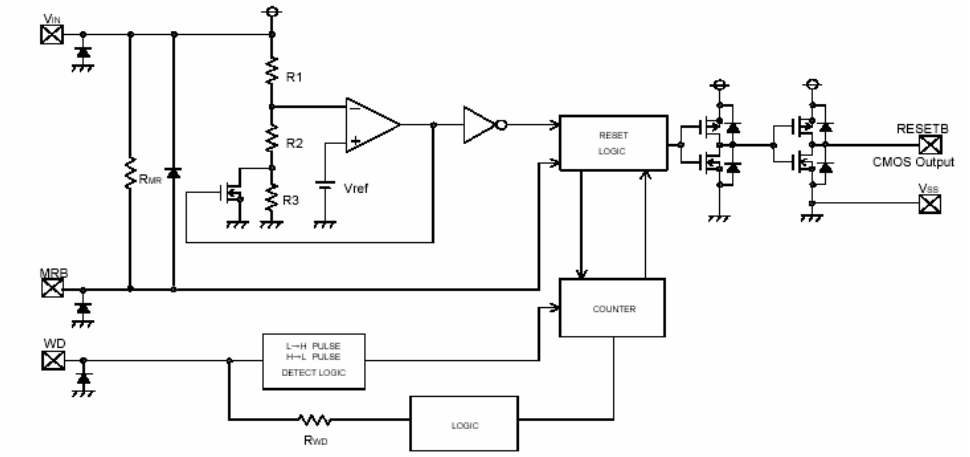

●XC6102, XC6112 Series

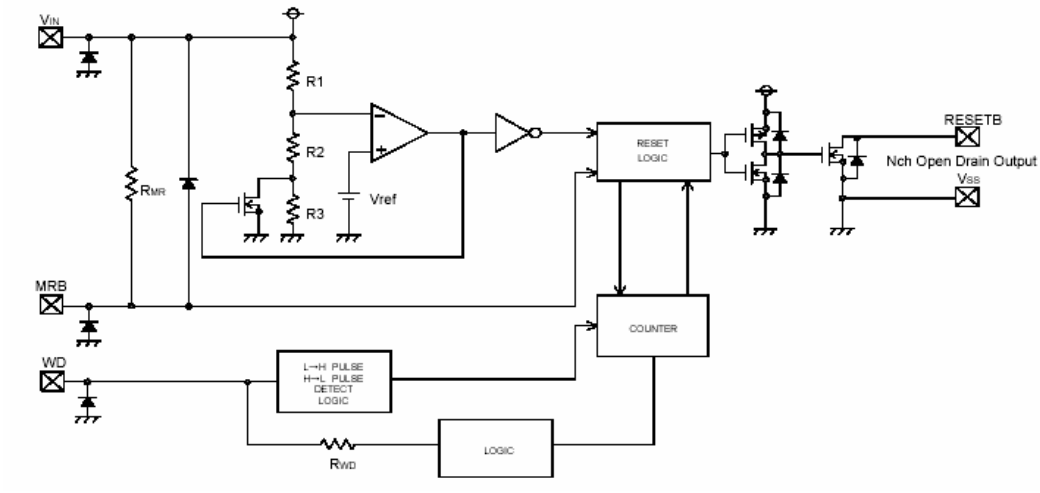

●XC6103, XC6113 Series

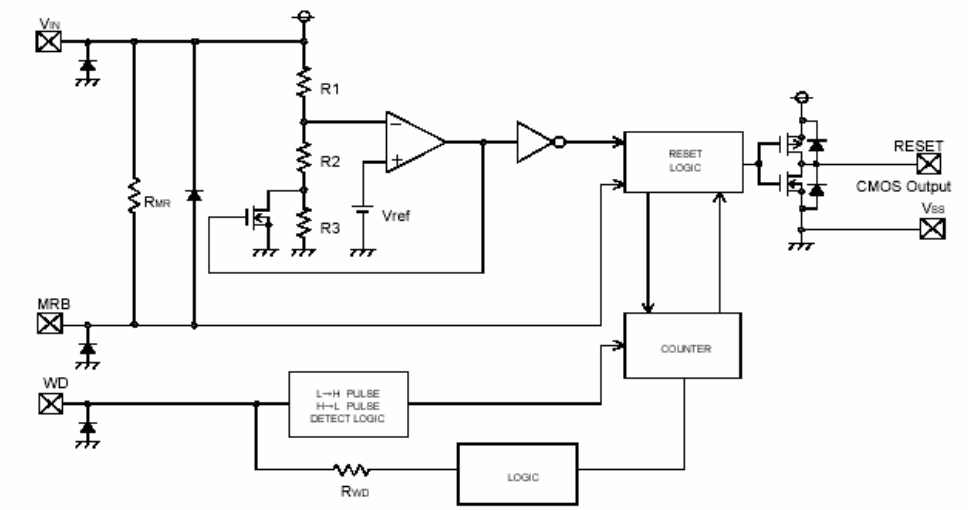

■BLOCK DIAGRAMS (Continued)

●XC6104, XC6114 Series

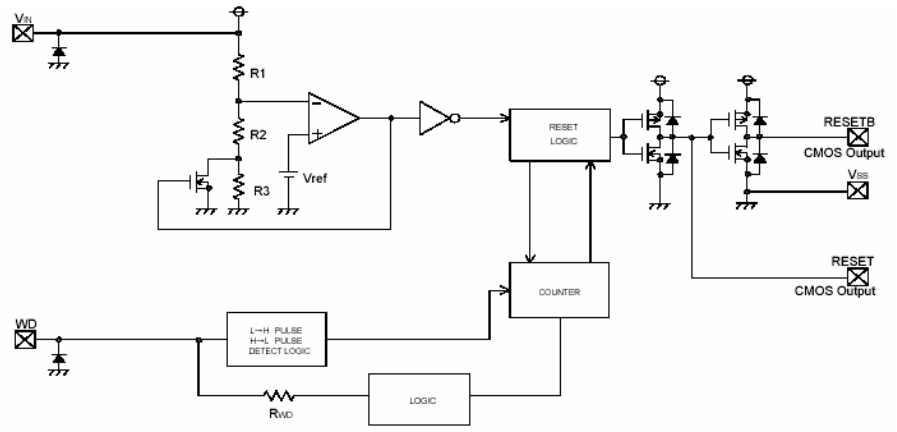

●XC6105, XC6115 Series

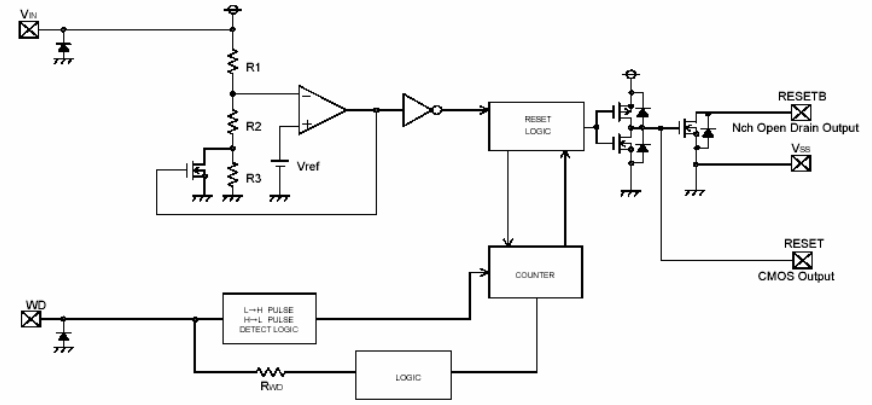

●XC6106, XC6116 Series

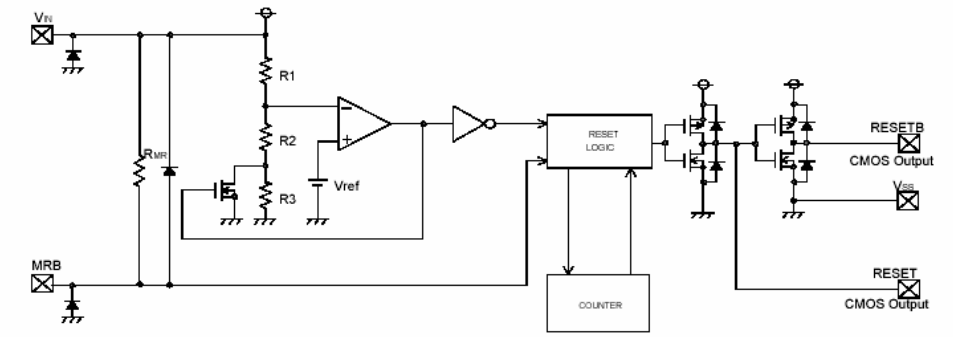

●XC6107, XC6117 Series

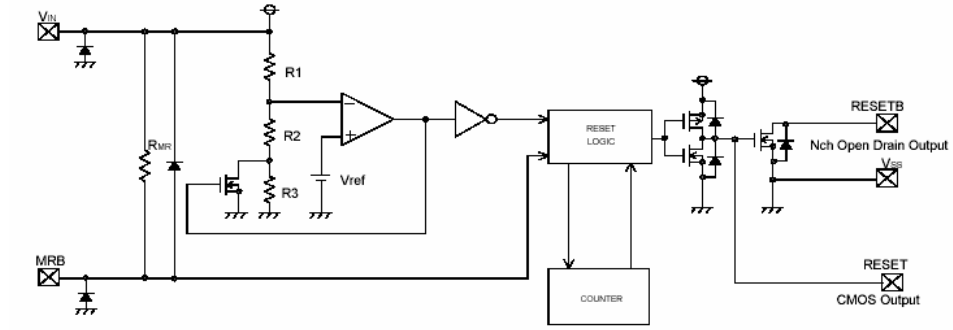

■ABSOLUTE MAXIMUM RATINGS

Ta = 25°C

PARAMETER		SYMBOL	RATINGS	UNITS
Input Voltage		V_{IN}	V_{SS} -0.3 ~ 7.0	V
		M_{RB}	V_{SS} -0.3 ~ V_{IN} +0.3	V
		WD	V_{SS} -0.3 ~ 7.0	V
Output Current		I_{OUT}	20	mA
Output Voltage	CMOS Output	RESETB/RESET	V_{SS} -0.3 ~ V_{IN} +0.3	V
	N-ch Open Drain Output	RESETB	V_{SS} -0.3 ~ 7.0	
Power Dissipation	SOT-25	Pd	250	mW
	USP-6C		100	
Operational Temperature Range		Topr	-40 ~ +85	°C
Storage Temperature Range		Tstg	-40 ~ +125	°C

■ELECTRICAL CHARACTERISTICS

●XC6101~XC6107, XC6111~XC6117 Series

Ta = 25 °C

PARAMETER	SYMBOL	CONDITIONS		MIN.	TYP.	MAX.	UNITS	CIRCUIT
Detect Voltage	V_{DFL} V_{DFH}			$V_{DF(T)}$ × 0.98	$V_{DF(T)}$	$V_{DF(T)}$ × 1.02	V	1
Hysteresis Range XC6101~XC6107 (*1)	V_{HYS}			V_{DF} × 0.02	V_{DF} × 0.05	V_{DF} × 0.08	V	1
Hysteresis Range XC6111~XC6117 (*2)	V_{HYS}			0	V_{DF} × 0.001	V_{DF} x 0.01	V	1
Supply Current	I_{SS}	XC61X1/XC61X2/XC61X3 XC61X4/XC61X5 (*3) (The MRB & the WD Pin: No connection)	V_{IN}=$V_{DF(T)}$×0.9V	-	5	11	μA	2
			V_{IN}=$V_{DF(T)}$×1.1V	-	10	16		
			V_{IN}=6.0V	-	12	18		
		XC61X6/XC61X7 (*3) (The MRB Pin: No connection)	V_{IN}=$V_{DF(T)}$×0.9V	-	4	10		
			V_{IN}=$V_{DF(T)}$×1.1V	-	8	14		
			V_{IN}=6.0V	-	10	16		
Operating Voltage	V_{IN}			1.0	-	6.0	V	1
V_{DFL} Output Current (RESETB)	I_{RBOUT}	N-ch. V_{DS} = 0.5V	VIN=1.0V	0.15	0.5	-	mA	3
			V_{IN}=2.0V ($V_{DFL(T)}$> 2.0V)	2.0	2.5	-		
			V_{IN}=3.0V ($V_{DFL(T)}$ >3.0V)	3.0	3.5	-		
			V_{IN}=4.0V ($V_{DFL(T)}$ >4.0V)	3.5	4.0	-		
		CMOS, P-ch V_{DS} = 0.5V	V_{IN}=6.0V	-	- 1.1	-0.8		4
V_{DFH} Output Current (RESET)	I_{ROUT}	N-ch V_{DS} = 0.5V	V_{IN}=6.0V	4.4	4.9	-	mA	3
		P-ch. V_{DS} = 0.5V	V_{IN}=1.0V	-	- 0.08	- 0.02		4
			V_{IN}=2.0V ($V_{DFH(T)}$> 2.0V)	-	- 0.50	- 0.30		
			V_{IN}=3.0V ($V_{DFH(T)}$>3.0V)	-	- 0.75	- 0.55		
			V_{IN}=4.0V ($V_{DFH(T)}$>4.0V)	-	- 0.95	- 0.75		
Temperature Characteristics	△V_{DF} / △Topr・V_{DF}	-40°C ≦ Topr ≦ 85 °C		-	±100	-	ppm / °C	1
Release Delay Time (V_{DF}≦1.8V)	T_{DR}	Time until V_{IN} is increased from 1.0V to 2.0V and attains to the release time level, and the Reset output pin inverts.		2	3.13	5	ms	5
				13	25	38		
				25	50	75		
				60	100	140		
				120	200	280		
				240	400	560		
				960	1600	2240		
Release Delay Time (V_{DF}≧1.9V)	T_{DR}	Time until V_{IN} is increased from 1.0V to (V_{DF}x1.1V) and attains to the release time level, and the Reset output pin inverts.		2	3.13	5	ms	5
				13	25	38		
				25	50	75		
				60	100	140		
				120	200	280		
				240	400	560		
				960	1600	2240		
Detect Delay Time	T_{DF}	Time until V_{IN} is decreased from 6.0V to 1.0V and attains to the detect voltage level, and the Reset output pin detects while the WD pin left opened.		-	3	30	μs	5
V_{DFL}/V_{DFH} CMOS Output Leak Current	I_{LEAK}	V_{IN}=6.0V, RESETB=6.0V (V_{DFL}) V_{IN}=6.0V, RESET=0V (V_{DFH})		-	0.01	-	μA	3
V_{DFL} N-ch Open Drain Output Leak Current	I_{LEAK}	V_{IN}=6.0V, RESETB=6.0V		-	0.01	0.10	μA	3

NOTE:
*1: XC6101~XC6107 (with hysteresis)
*2: XC6111~XC6117 (without hysteresis)
*3: 'X' represents both '0' and '1'. (ex. XC61X1⇒XC6101 and XC6111)
*4: $V_{DF(T)}$: Setting detect voltage
*5: If only "V_{DF}" is indicated, it represents both V_{DFL} (low when detected) and V_{DFH} (high when detected).

■ELECTRICAL CHARACTERISTICS (Continued)

●XC6101~XC6105, XC6111~XC6115 Series

Ta = 25 °C

PARAMETER	SYMBOL	CONDITIONS	MIN.	TYP.	MAX.	UNITS	CIRCUIT
Watchdog Timeout Period (V_{DF}≦1.8V)	T_{WD}	Time until V_{IN} increases form 1.0V to 2.0V and the Reset output pin is released to go into the detection state. (WD=V_{SS})	3.13	6.25	9.38	ms	6
			25	50	75		
			60	100	140		
			120	200	280		
			240	400	560		
			960	1600	2240		
Watchdog Timeout Period (V_{DF}≧1.9V)	T_{WD}	Time until V_{IN} increases form 1.0V to (V_{DF}x1.1V) and the Reset output pin is released to go into the detection state. (WD=V_{SS})	3.13	6.25	9.38	ms	6
			25	50	75		
			60	100	140		
			120	200	280		
			240	400	560		
			960	1600	2240		
Watchdog Minimum Pulse Width	T_{WDIN}	V_{IN}=6.0V, Apply pulse from 6.0V to 0V to the WD pin.	300	-	-	ns	7
Watchdog High Level Voltage	V_{WDH}	V_{IN}=V_{DF} x 1.1V ~ 6.0V	V_{IN} x 0.7	-	6	V	7
Watchdog Low Level Voltage	V_{WDL}	V_{IN}=V_{DF} x 1.1V ~ 6.0V	0	-	V_{IN} x 0.3	V	7
Watchdog Input Current	I_{WD}	V_{IN}=6.0V, V_{WD}=6.0V (Avg. when peak)	-	12	19	μA	8
		V_{IN}=6.0V, V_{WD}=0V (Avg. when peak)	- 19	-12	-		
Watchdog Input Resistance	R_{WD}	V_{IN}=6.0V, V_{WD}=0V, R_{WD}=V_{IN}/ |I_{WD}|	315	500	880	kΩ	8

●XC6101 ~ XC6103, XC6106 ~ XC6107, XC6111 ~ XC6113, XC6116 ~ XC6117 Series

Ta = 25 °C

PARAMETER	SYMBOL	CONDITIONS	MIN.	TYP.	MAX.	UNITS	CIRCUIT
MRB High Level Voltage	V_{MRH}	V_{IN}=V_{DF}x1.1V ~ 6.0V	1.4	-	V_{IN}	V	9
MRB Low Level Voltage	V_{MRL}	V_{IN}=V_{DF}x1.1V ~ 6.0V	0	-	0.35		9
MRB Pull-up Resistance	R_{MR}	V_{IN}=6.0V, MRB=0V, R_{MR}=V_{IN}/ |I_{MRB}|	1.6	2.4	3.0	MΩ	10
MRB Minimum Pulse Width (*3) XC6101~XC6105 XC6111~XC6115	T_{MRIN}	V_{IN}=6.0V, Apply pulse from 6.0V to 0V to the MRB pin	2.8	-	-	μs	11
MRB Minimum Pulse Width (*4) XC6106, XC6107 XC6116, XC6117	T_{MRIN}	V_{IN}=6.0V, Apply pulse from 6.0V to 0V to the MRB pin	1.2	-	-		

NOTE:
*1: $V_{DF(T)}$: Setting detect voltage
*2: If only "V_{DF}" is indicated, it represents both V_{DFL} (low when detected) and V_{DFH} (high when detected).
*3: Watchdog function is available.
*4: Watchdog function is not available.

■OPERATIONAL EXPLANATION

The XC6101~XC6107, XC6111~XC6117 series compare, using the error amplifier, the voltage of the internal voltage reference source with the voltage divided by R1, R2 and R3 connected to the V_{IN} pin. The resulting output signal from the error amplifier activates the watchdog logic, manual reset logic, delay circuit and the output driver. When the V_{IN} pin voltage gradually falls and finally reaches the detect voltage, the RESETB pin output goes from high to low in the case of the V_{DFL} type ICs, and the RESET pin output goes from low to high in the case of the V_{DFH} type ICs.

<RESETB / RESET Pin Output Signal>
* V_{DFL} (RESETB) type - output signal: Low when detected.
The RESETB pin output goes from high to low whenever the V_{IN} pin voltage falls below the detect voltage, or whenever the MRB pin is driven from high to low. The RESETB pin remains low for the release delay time (T_{DR}) after the V_{IN} pin voltage reaches the release voltage. If neither rising nor falling signals are applied to the WD pin within the watchdog timeout period, the RESETB pin output remains low for the release delay time (T_{DR}), and thereafter the RESET pin outputs high level signal.

* V_{DFH} (RESET) type – output signal: High when detected.
The RESET pin output goes from low to high whenever the V_{IN} pin voltage falls below the detect voltage, or whenever the MRB pin is driven from high to low. The RESET pin remains high for the release delay time (T_{DR}) after the V_{IN} pin voltage reaches the release voltage. If neither rising nor falling signals are applied to the WD pin within the watchdog timeout period, the V_{OUT} pin output remains high for the release delay time (T_{DR}), and thereafter the RESET pin outputs low level signal.

<Hysteresis>
When the internal comparator output is high, the NMOS transistor connected in parallel to R3 is turned ON, activating the hysteresis circuit. The difference between the release and detect voltages represents the hysteresis range, as shown by the following calculations:

V_{DF} (detect voltage) = (R1+R2+R3) x Vref(R2+R3)
V_{DR} (release voltage) = (R1+R2) x Vref(R2)
V_{HYS} (hysteresis range)=V_{DR}-V_{DF} (V)
V_{DR} > V_{DF}
** Detect voltage (V_{DF}) includes conditions of both V_{DFL} (low when detected) and V_{DFH} (high when detected).*
** Please refer to the block diagrams for R1, R2, R3 and Vref.*

Hysteresis range is selectable from V_{DF} x 0.05V (XC6101~XC6107) or V_{DF} x 0.001V (XC6111~XC6117).

<Watchdog (WD) Pin>
The XC6101~XC6107, XC6111~XC6117 series use a watchdog timer to detect malfunction or “runaway” of the microprocessor. If neither rising nor falling signals are applied from the microprocessor within the watchdog timeout period, the RESETB/RESET pin output maintains the detection state for the release delay time (T_{DR}), and thereafter the RESET/RESETB pin output returns to the release state (Please refer to the FUNCTION CHART). The timer in the watchdog is then restarted. Six watchdog timeout period settings are available in 1.6sec, 400msec, 200msec, 100msec, 50msec, 6.25msec.

<MRB Pin>
Using the MRB pin input, the RESET/RESETB pin signal can be forced to the detection state. When the MRB pin is driven from high to low, the RESETB pin output goes from high to low in the case of the V_{DFL} type ICs, and the RESET pin output goes from low to high in the case of the V_{DFH} type. Even after the MRB pin is driven back high, the RESET/RESETB pin output maintains the detection state for the release delay time (T_{DR}). Since the MRB pin is internally pulled up to the V_{IN} pin voltage level, leave the MRB pin open if unused (Please refer to the FUNCTION CHART). A diode, which is an input protection element, is connected between the MRB pin and V_{IN} pin. Therefore, if the MRB pin is applied voltage that exceeds V_{IN}, the current will flow to V_{IN} through the diode. Please use this IC within the stated maximum ratings (V_{SS} -0.3 ~ V_{IN} +0.3) on the MRB pin.

<Release Delay Time>
Release delay time (T_{DR}) is the time that elapses from when the V_{IN} pin reaches the release voltage, or when the watchdog timeout period expires with no rising signal applied to the WD pin, until the RESET/RESETB pin output is released from the detection state. Seven release delay time (T_{DR}) watchdog timeout period settings are available in 1.6sec, 400msec, 200msec, 100msec, 50msec, 25msec, 3.13msec.

<Detect Delay Time>
Detect Delay Time (T_{DF}) is the time that elapses from when the V_{IN} pin voltage falls to the detect voltage until the RESET/ RESETB pin output goes into the detection state.

■TIMING CHARTS

●CMOS Output

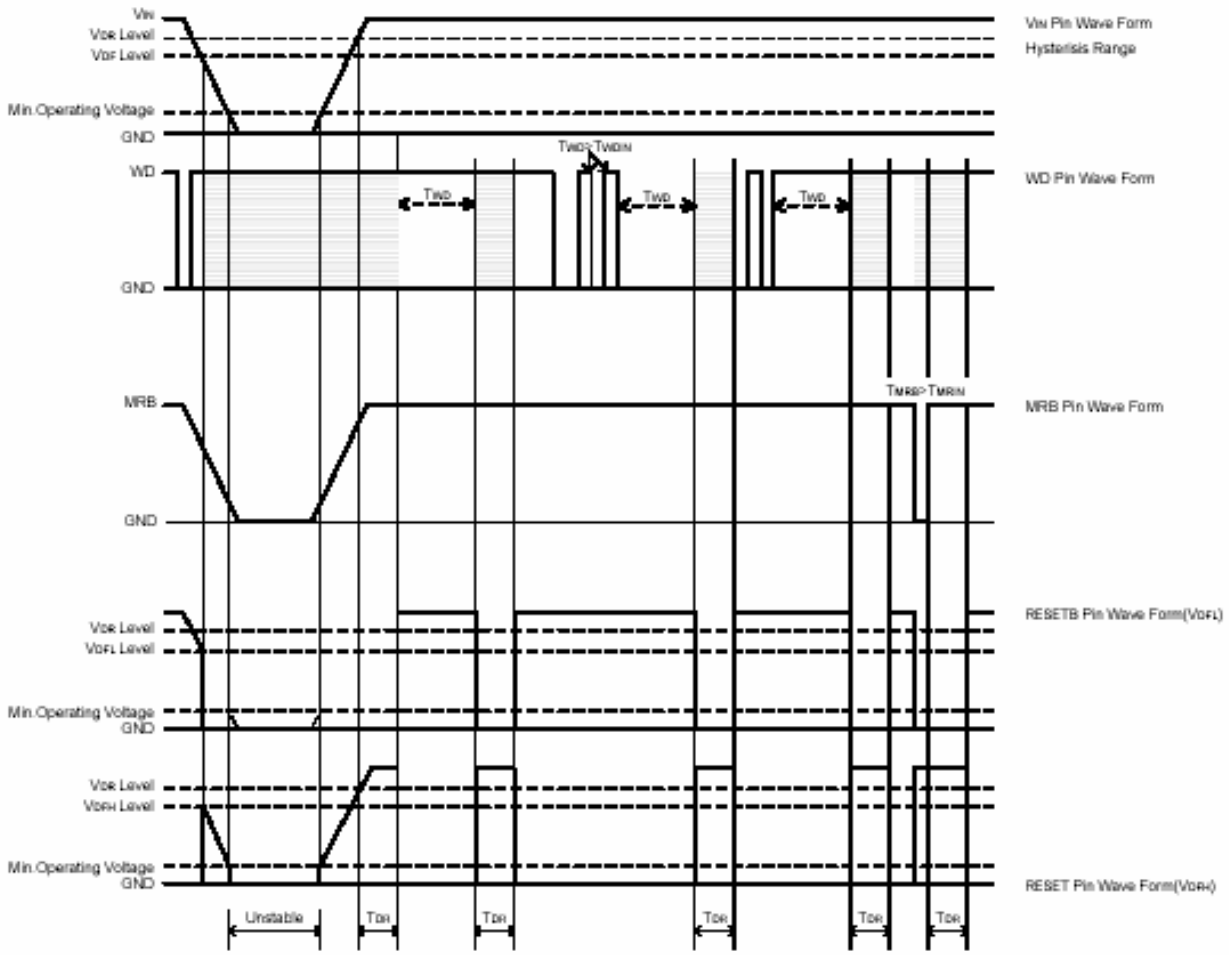

●TDF (CMOS Output)

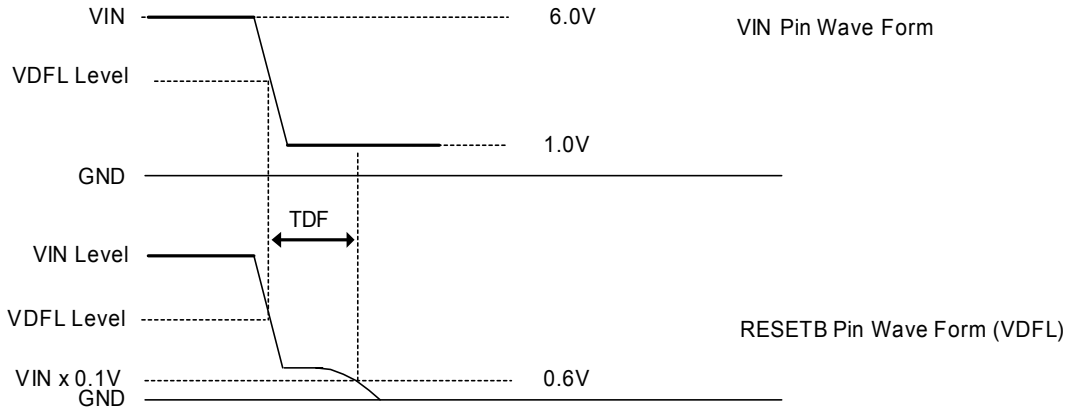

■NOTES ON USE

1. Please use this IC within the stated maximum ratings. Operation beyond these limits may cause degrading or permanent damage to the device.

2. When a resistor is connected between the VIN pin and the input, the VIN voltage drops while the IC is operating and a malfunction may occur as a result of the IC's through current. For the CMOS output products, the VIN voltage drops while the IC is operating and malfunction may occur as a result of the IC's output current. Please be careful with using the XC6111~XC6117 series (without hysteresis).

3. In order to stabilize the IC's operations, please ensure that the VIN pin's input frequency's rise and fall times are more than 1 μ sec/V.

4. Noise at the power supply may cause a malfunction of the watchdog operation or the circuit. In such case, please strength the line between VIN and the GND pin and connect about 0.22μF of a capacitor between the VIN pin and the GND pin.

5. Protecting against a malfunction while the watchdog time out period, an ignoring time (no reaction time) occurs to the rise and fall times. Referring to the figure below, the ignoring time (no reaction time) lasts for 900μsec at maximum.

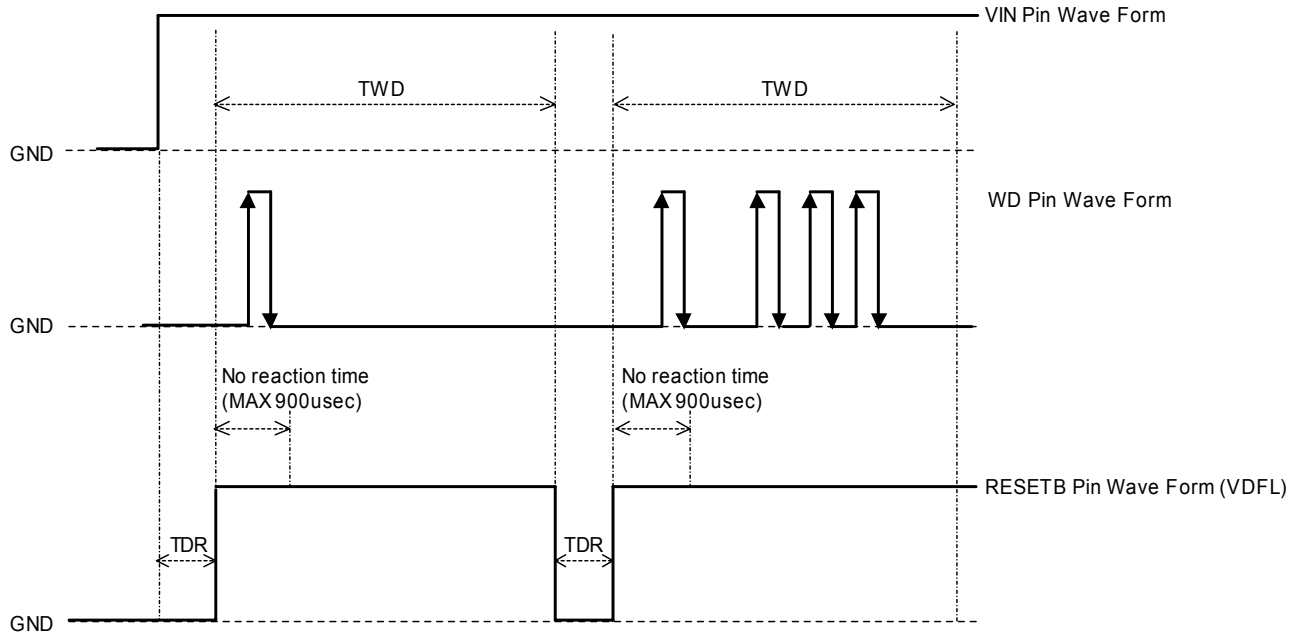

■PIN LOGIC CONDITIONS

PIN NAME	LOGIC	CONDITIONS
V_{IN}	H	$V_{IN} \geq V_{DF}+V_{HYS}$
	L	$V_{IN} \leq V_{DF}$
MRB	H	MRB≧1.40V
	L	MRB≦0.35V
WD	H	When keeping $W_D \geq V_{WDH}$ more than T_{WD}
	L	When keeping $W_D \leq V_{WDL}$ more than T_{WD}
	L → H	V_{WDL} → V_{WDH}, $T_{WDIN} \geq$300nsec
	H → L	V_{WDH} →V_{WDH}, $T_{WDIN} \geq$300nsec

NOTE:
*1: If only "V_{DF}" is indicated, it represents both V_{DFL} (low when detected) and V_{DFH} (high when detected).
*2: For the details of each parameter, please see the electrical characteristics.
V_{DF}: Detect Voltage
V_{HYS}: Hysteresis Range
V_{WDH}: WD High Level Voltage
V_{WDL}: WD Low Level Voltage
T_{WDIN}: WD Pulse Width
T_{WD}: WD Timeout Period

■FUNCTION CHART

●XC6101/XC61111, XC6102/6112 Series

V_{IN}	MRB	WD	RESETB (*2)
H	H or Open	H	Repeat detect and release (H→L→H)
H		L	
H		Open	H
H		L → H	
H		H → L	
H	L	*1	L
L			

●XC6103/XC61113 Series

V_{IN}	MRB	WD	RESETB (*3)
H	H or Open	H	Repeat detect and release (L→H→L)
H		L	
H		Open	L
H		L → H	
H		H → L	
H	L	*1	H
L			

●XC6104/XC61114, XC6105/XC6115 Series

V_{IN}	WD	RESETB (*2)	RESET (*3)
H	H	Repeat detect and release (H→L→H)	Repeat detect and release (L→H→L)
H	L		
H	Open	H	L
H	L → H		
H	H → L		
H	*1	L	H
L			

●XC6106/XC61116, XC6107/XC6117 Series

V_{IN}	MRB	RESETB (*2)	RESET (*3)
H	H or Open	H	L
H	L	L	H
L			

*1: Including all logic of WD (WD=H, L, L→H, H→L, OPEN).
*2: When the RESETB is High, the circuit is in the release state.
When the RESETB is Low, the circuit is in the detection state.
*3: When the RESET is High, the circuit is in the release state.
When the RESET is Low, the circuit is in the detection state.
*4: V_{IN}=L and MRB=H can not be combined for the rated input voltage of the MRB pin is Vss-0.3V to V_{IN}+0.3V.
*5: The RESET/RESETB pin becomes indefinite operation while 0.35V<MRB<1.4V.

■TEST CIRCUITS

Circuit 1

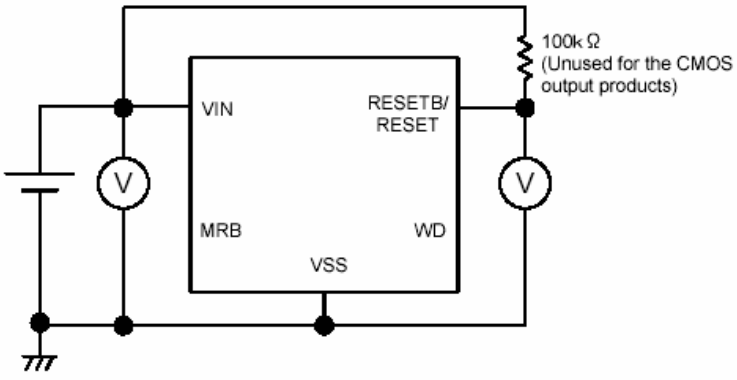

Circuit 2

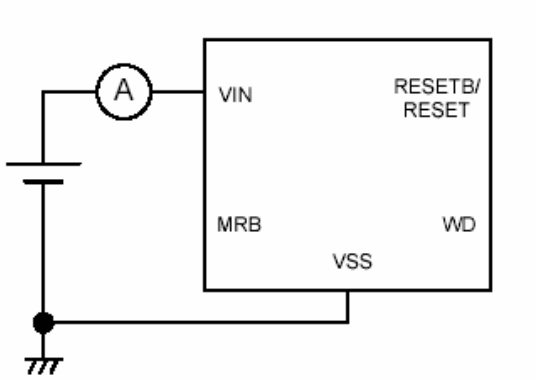

Circuit 3

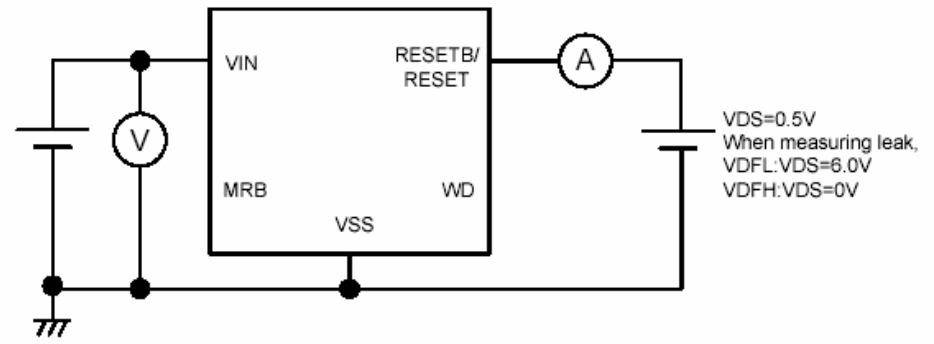

Circuit 4

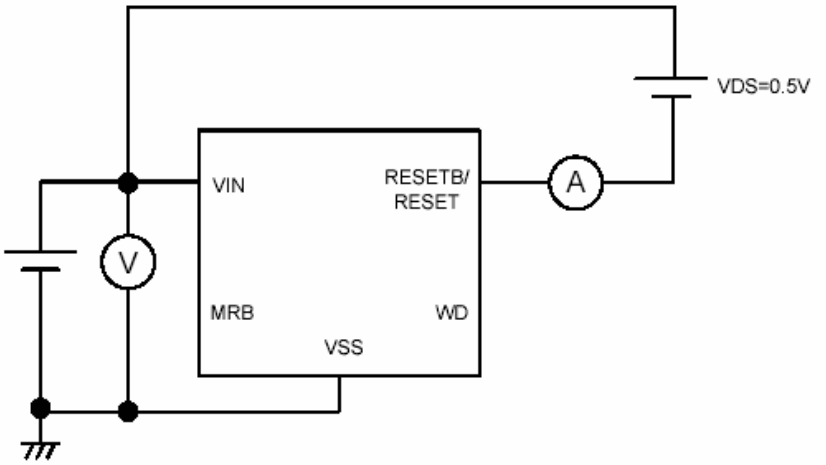

■TEST CIRCUITS (Continued)

Circuit 5

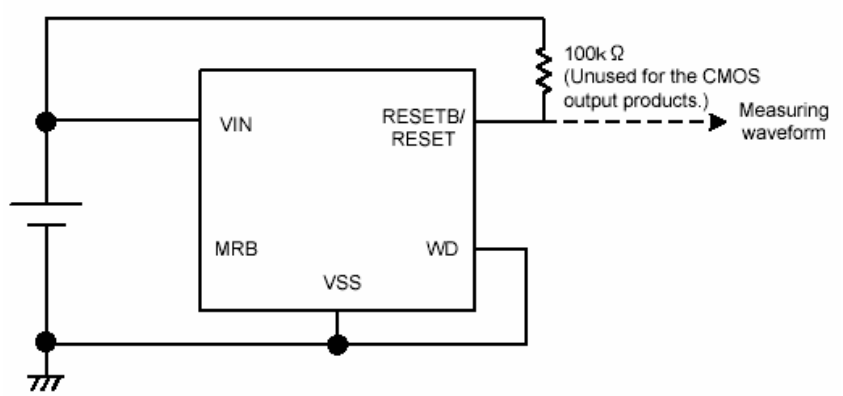

Circuit 6

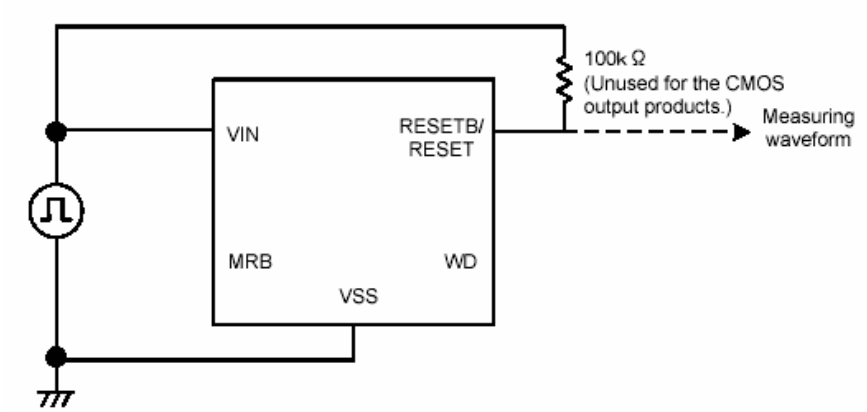

Circuit 7

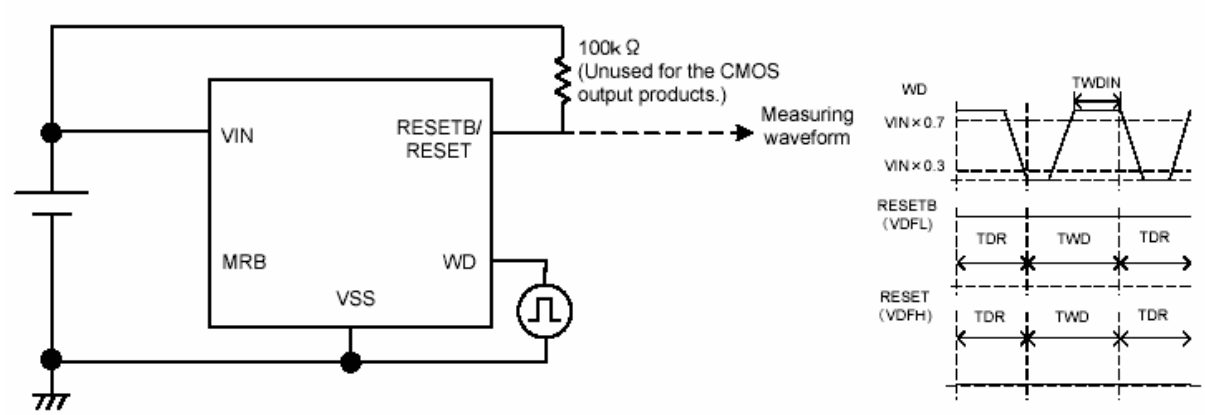

■TEST CIRCUITS (Continued)

Circuit 8

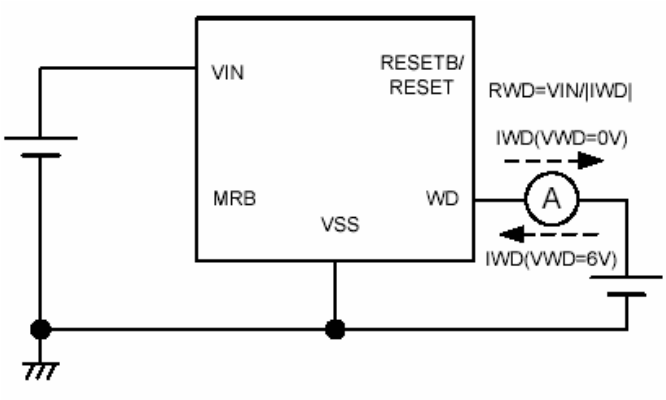

Circuit 9

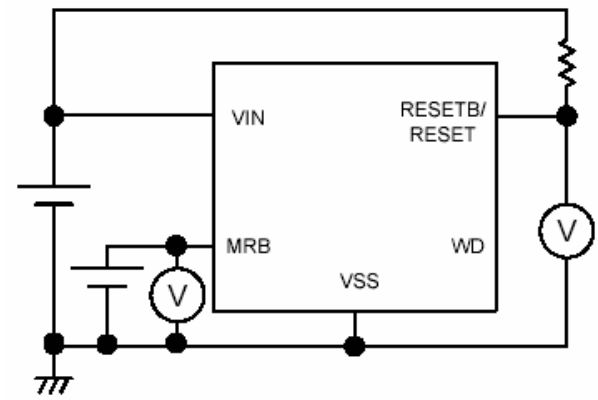

Circuit 10

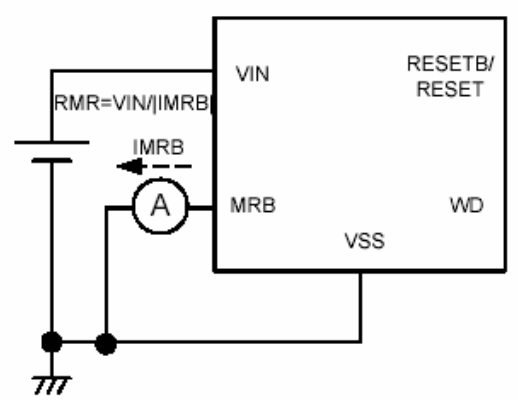

Circuit 11

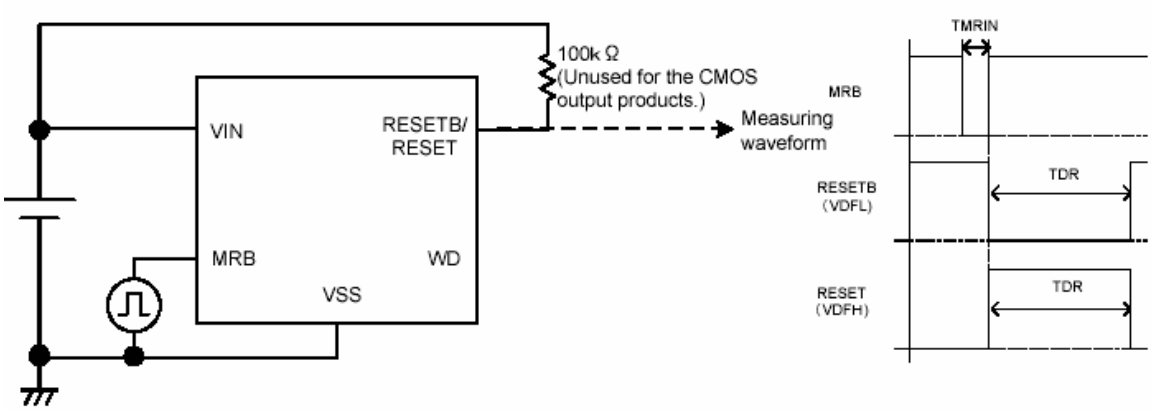

■TYPICAL PERFORMANCE CHARACTERISTICS

(1.1) Supply Current vs. Input Voltage

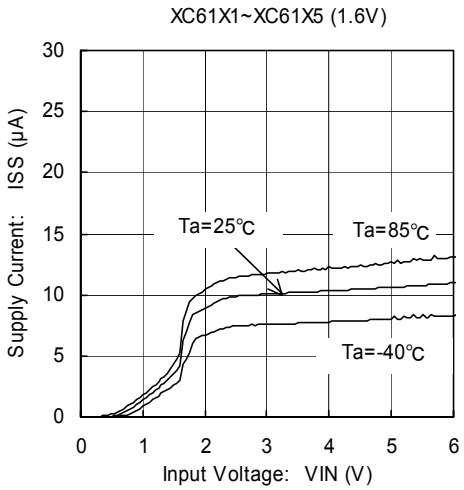

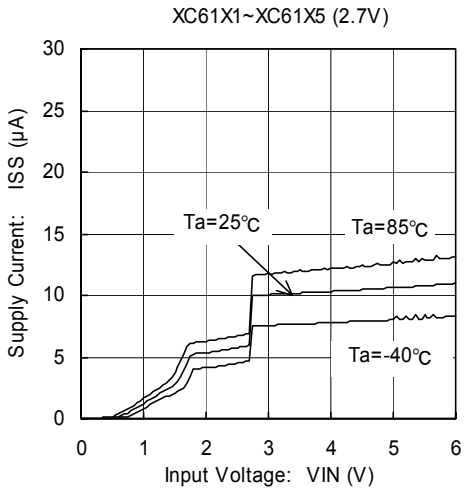

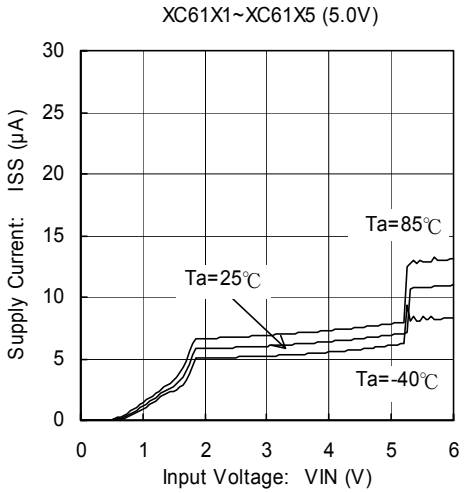

(1.2) Supply Current vs. Input Voltage

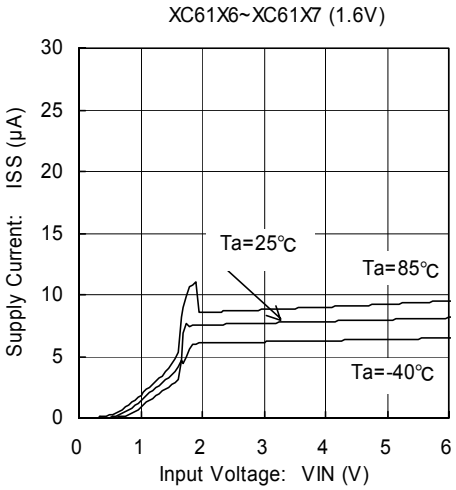

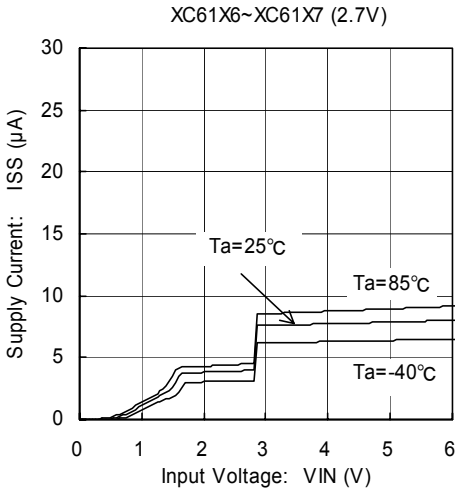

* ‘X’ represents both ‘0’ and ‘1’. (ex. XC61X1⇒XC6101 and XC6111)

■TYPICAL PERFORMANCE CHARACTERISTICS (Continued)

(1.2) Supply Current vs. Input Voltage (Continued)

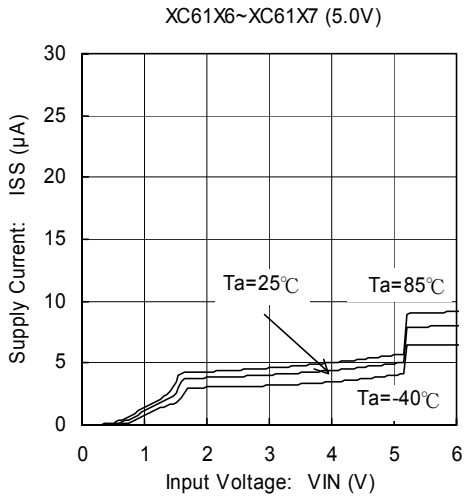

(2) Detect, Release Voltage vs. Ambient Temperature

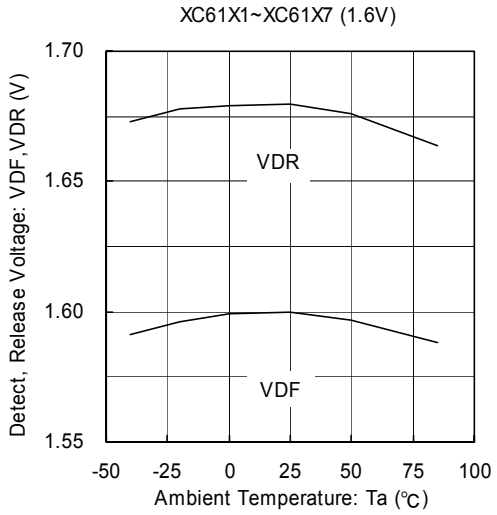

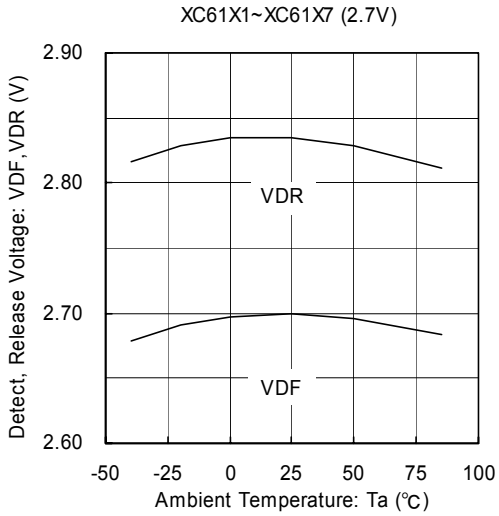

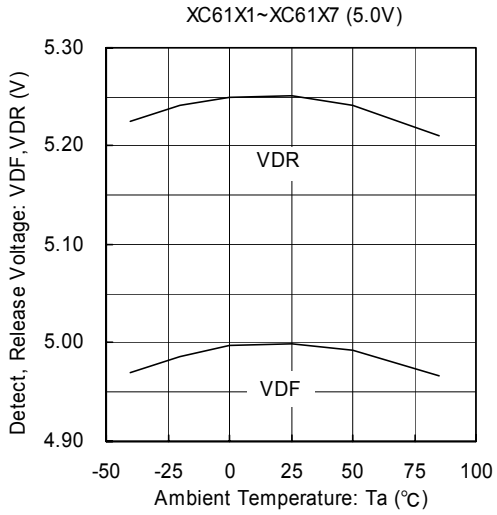

* ‘X’ represents both ‘0’ and ‘1’. (ex. XC61X1⇒XC6101 and XC6111)

■TYPICAL PERFORMANCE CHARACTERISTICS (Continued)

(3.1) Detect, Release Voltage vs. Input Voltage (V_{DFL})

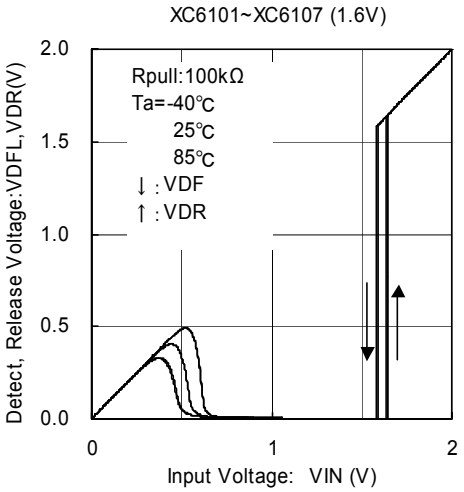

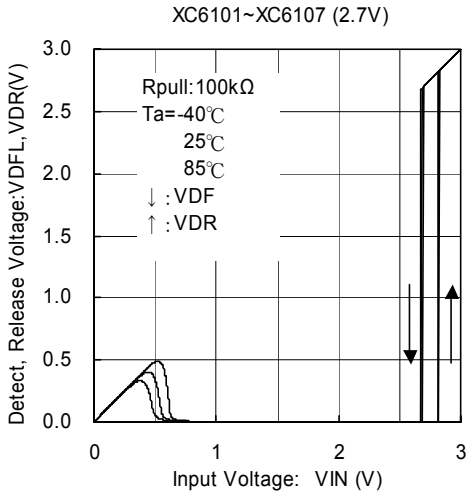

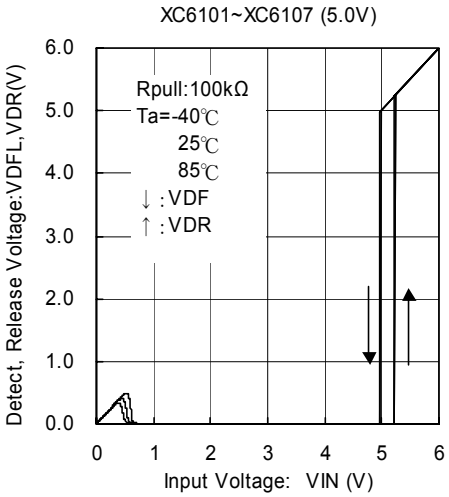

(3.2) Detect, Release Voltage vs. Input Voltage (V_{DFH})

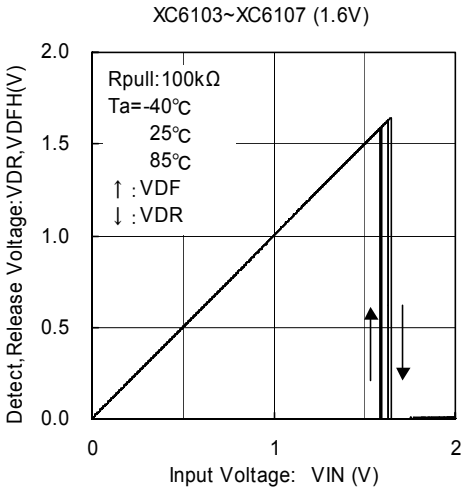

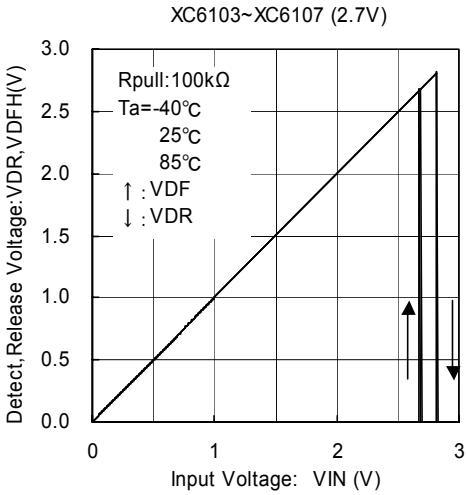

* ‘X’ represents both ‘0’ and ‘1’. (ex. XC61X1⇒XC6101 and XC6111)

■TYPICAL PERFORMANCE CHARACTERISTICS (Continued)

(3.2) Detect, Release Voltage vs. Input Voltage (V_{DFH}) (Continued)

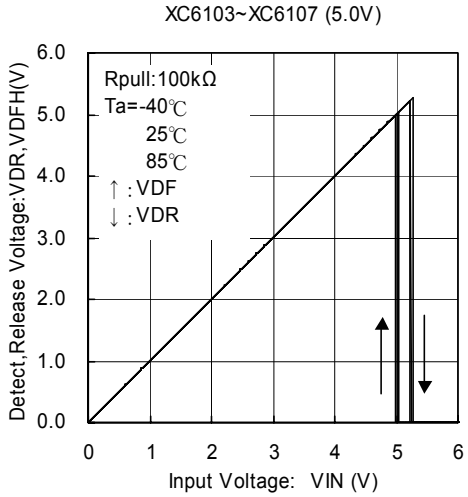

(4) N-ch Driver Output Current vs. V_{DS}

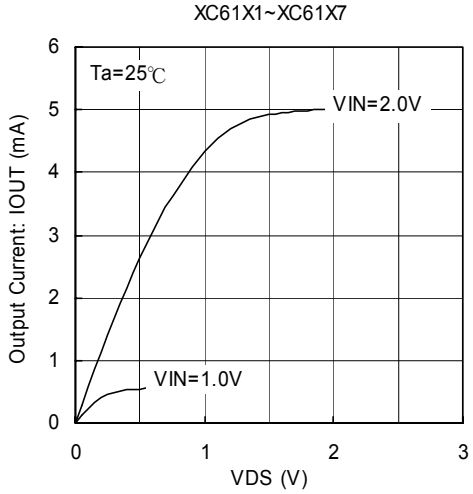

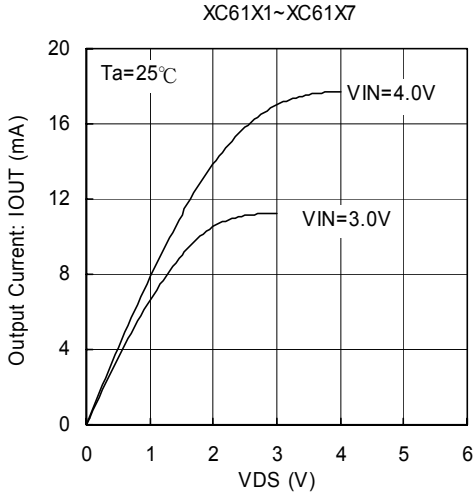

(5) N-ch Driver Output Current vs. Input Voltage

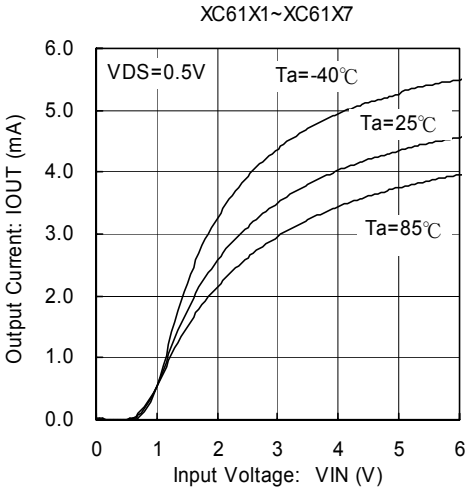

* ‘X’ represents both ‘0’ and ‘1’. (ex. XC61X1⇒XC6101 and XC6111)

■TYPICAL PERFORMANCE CHARACTERISTICS (Continued)

(6) P-ch Driver Output Current vs. Input Voltage 1

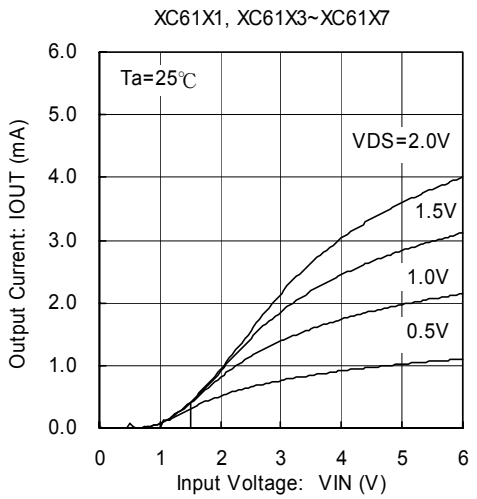

(7) P-ch Driver Output Current vs. Input Voltage 2

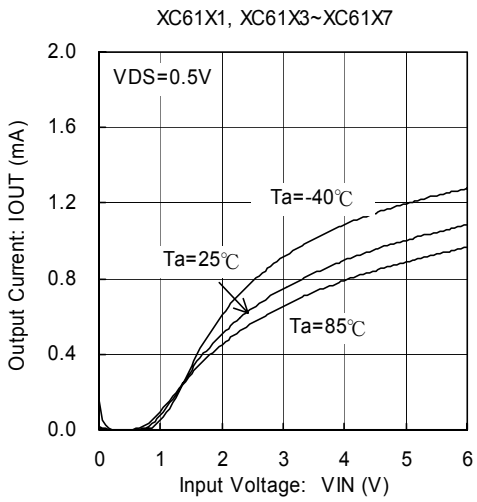

(8) Release Delay Time vs. Ambient Temperature

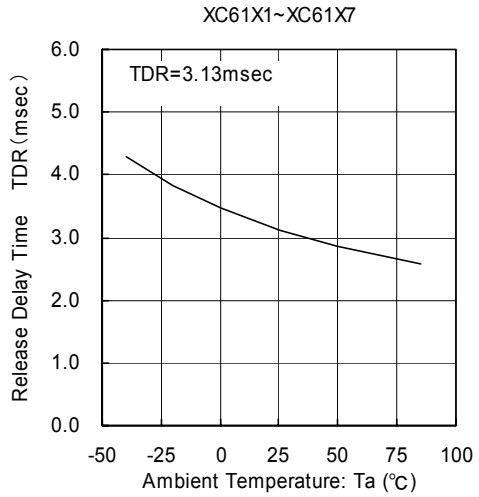

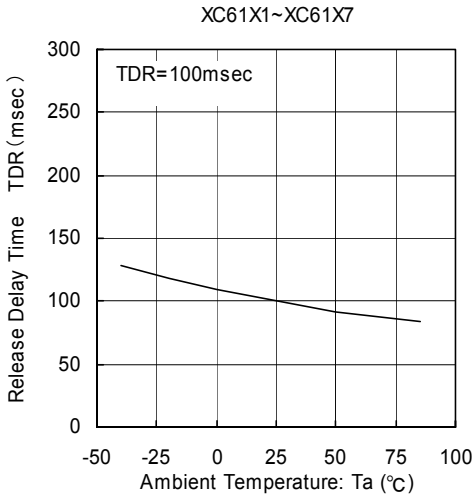

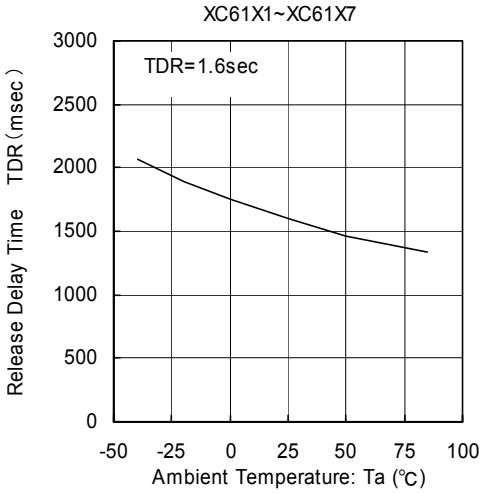

* ‘X’ represents both ‘0’ and ‘1’. (ex. XC61X1⇒XC6101 and XC6111)

■TYPICAL PERFORMANCE CHARACTERISTICS (Continued)

(9) Watchdog Timeout Period vs. Ambient Temperature

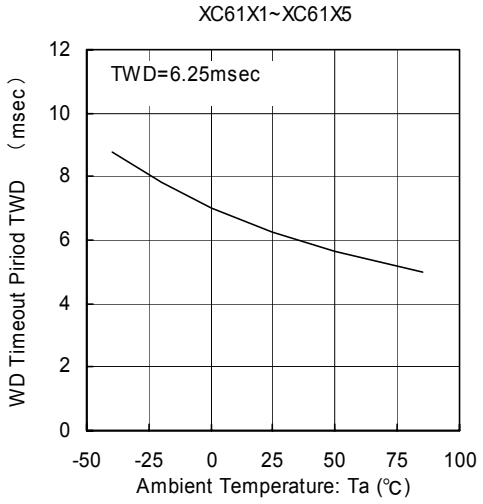

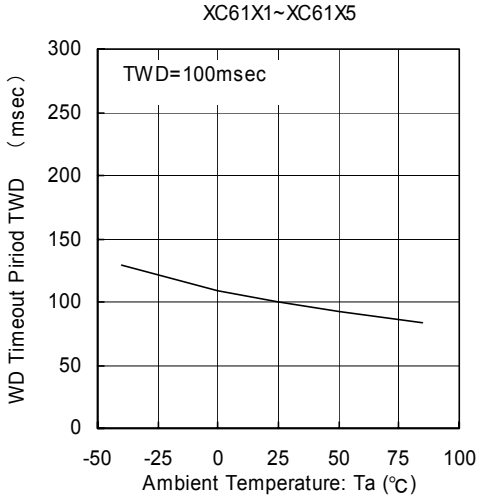

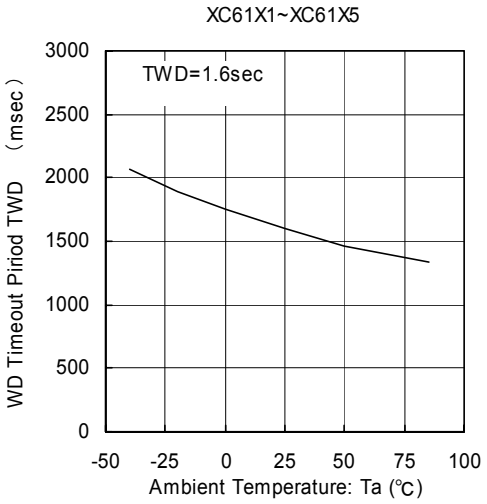

(10) Release Delay Time vs. Input Voltage

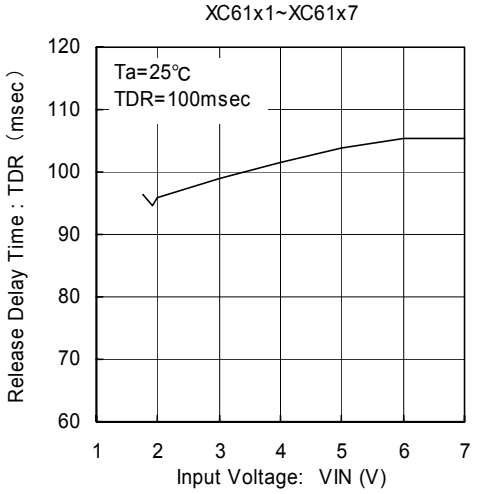

(11) Watchdog Timeout Period vs. Input Voltage

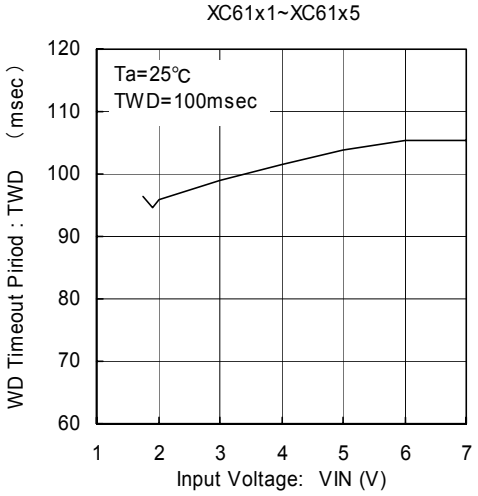

* ‘X’ represents both ‘0’ and ‘1’. (ex. XC61X1⇒XC6101 and XC6111)

■TYPICAL PERFORMANCE CHARACTERISTICS (Continued)

(12) Watchdog Low Level Voltage vs. Ambient Temperature

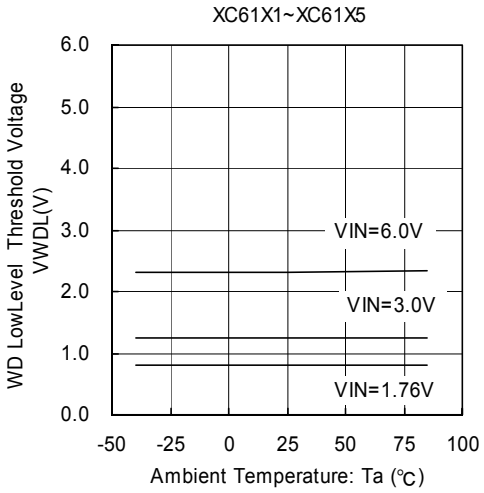

(13) Watchdog High Level Voltage vs. Ambient Temperature

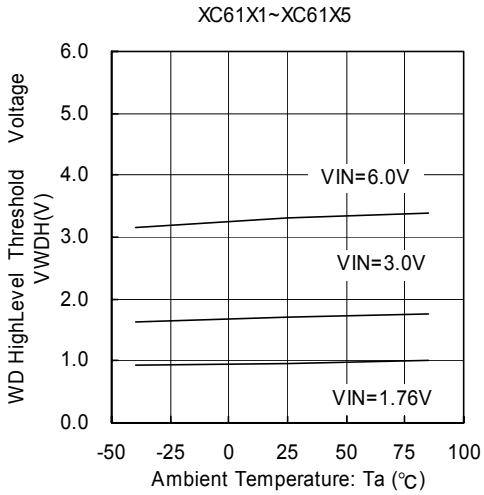

(14) MRB Low Level Voltage vs. Ambient Temperature

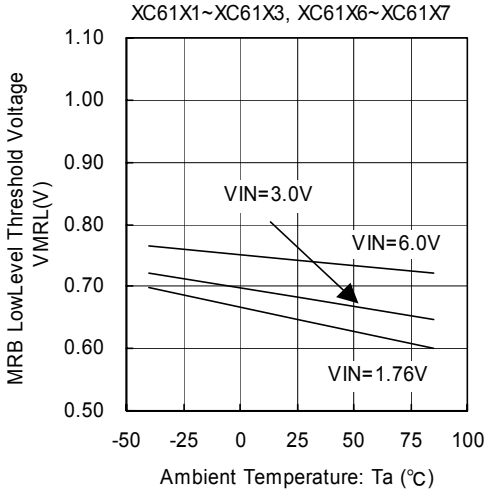

(15) MRB High Level Voltage vs. Ambient Temperature

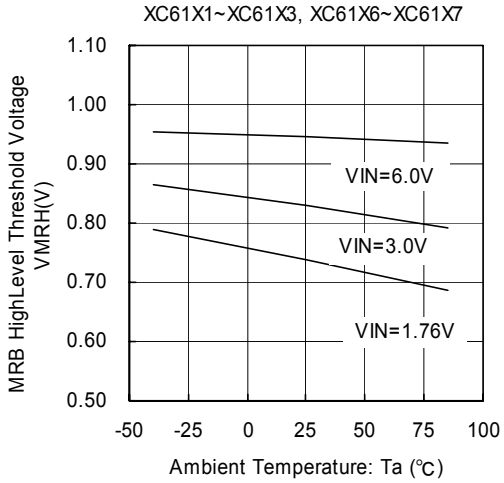

* ‘X’ represents both ‘0’ and ‘1’. (ex. XC61X1⇒XC6101 and XC6111)

1. The products and product specifications contained herein are subject to change without notice to improve performance characteristics. Consult us, or our representatives before use, to confirm that the information in this catalog is up to date.
2. We assume no responsibility for any infringement of patents, patent rights, or other rights arising from the use of any information and circuitry in this catalog.
3. Please ensure suitable shipping controls (including fail-safe designs and aging protection) are in force for equipment employing products listed in this catalog.
4. The products in this catalog are not developed, designed, or approved for use with such equipment whose failure of malfunction can be reasonably expected to directly endanger the life of, or cause significant injury to, the user.
   (e.g. Atomic energy; aerospace; transport; combustion and associated safety equipment thereof.)
5. Please use the products listed in this catalog within the specified ranges.
   Should you wish to use the products under conditions exceeding the specifications, please consult us or our representatives.
6. We assume no responsibility for damage or loss due to abnormal use.
7. All rights reserved. No part of this catalog may be copied or reproduced without the prior permission of Torex Semiconductor Ltd.

TOREX SEMICONDUCTOR LTD.

ООО «ЛайфЭлектроникс» “LifeElectronics” LLC

ИНН 7805602321 КПП 780501001 Р/С 40702810122510004610 ФАКБ "АБСОЛЮТ БАНК" (ЗАО) в г.Санкт-Петербурге К/С 30101810900000000703 БИК 044030703

Компания «Life Electronics» занимается поставками электронных компонентов импортного и отечественного производства от производителей и со складов крупных дистрибьюторов Европы, Америки и Азии.

С конца 2013 года компания активно расширяет линейку поставок компонентов по направлению коаксиальный кабель, кварцевые генераторы и конденсаторы (керамические, пленочные, электролитические), за счёт заключения дистрибьюторских договоров

Мы предлагаем:

- *Конкурентоспособные цены и скидки постоянным клиентам.*
- *Специальные условия для постоянных клиентов.*
- *Подбор аналогов.*
- *Поставку компонентов в любых объемах, удовлетворяющих вашим потребностям.*

- *Приемлемые сроки поставки, возможна ускоренная поставка.*
- *Доставку товара в любую точку России и стран СНГ.*
- *Комплексную поставку.*
- *Работу по проектам и поставку образцов.*
- *Формирование склада под заказчика.*

- *Сертификаты соответствия на поставляемую продукцию (по желанию клиента).*
- *Тестирование поставляемой продукции.*
- *Поставку компонентов, требующих военную и космическую приемку.*
- *Входной контроль качества.*
- *Наличие сертификата ISO.*

В составе нашей компании организован Конструкторский отдел, призванный помогать разработчикам, и инженерам.

Конструкторский отдел помогает осуществить:

- *Регистрацию проекта у производителя компонентов.*
- *Техническую поддержку проекта.*
- *Защиту от снятия компонента с производства.*
- *Оценку стоимости проекта по компонентам.*
- *Изготовление тестовой платы монтаж и пусконаладочные работы.*

Тел: +7 (812) 336 43 04 (многоканальный)
Email: org@lifeelectronics.ru

www.lifeelectronics.ru