Thermal-Magnetic Circuit Breaker 2210-T2..

Description

One, two and three pole thermal-magnetic circuit breakers with trip-free mechanism and toggle actuation (S-type TM CBE to EN 60934/IEC 934). Featuring a combi-foot design for both symmetric and asymmetric rail mounting. Available with auxiliary contact (1 x N/O or 1 x N/C) for status signalling. Two and three pole models are internally linked to ensure that both/all poles trip in the event of an overload on one pole, even if the actuator is held in the ON position. This CBE can be supplied in current ratings up to 32 A with a choice of characteristic curves. All screw terminals are recessed for safety. Approved to CBE standard EN 60934 (IEC 60934).

2210-T2..
2-pole

Typical applications

Process control equipment, robotics, machine tool control, communications systems, instrumentation.

Features

- Comprehensive approvals allow global use
- Current rating range from 0.1 A to 32 A
- Very small width of only 12.5 mm including auxiliary contacts
- High vibration resistance to DNV GL Class B for mounting with combustion engines, pumps, compressors
- Compliant with the relevant requirements of the railway standards DIN EN 50155, DIN EN 61373 and EN 45545 (detailed information upon request)

Your benefits

- Space and weight savings of at least 50 % compared to conventional MCBs
- Reduced assembly times thanks to integral auxiliary contacts
- Optimum equipment protection through fine grading of current ratings

Preferred types – for more details on all configurations please see order numbering code

Preferred types are E-T-A products most frequently used by E-T-A customers. We manufacture E-T-A preferred types in particularly high volumes. Our preferred types are supplied at shorter lead times than non-standard versions.

Preferred types	**Standard current ratings (A)**										
1-pole	**0.5**	**1**	**2**	**3**	**4**	**5**	**6**	**8**	**10**	**16**	**20**
2210-T210-K0M1-H121-	x	x	x	x	x	x	x	x	x	x	x
2-pole	**0.5**	**1**	**2**	**3**	**4**	**5**	**6**	**8**	**10**	**16**	**20**
2210-T220-K0M1-H221-			x		x		x		x	x	x

Approvals

Data sheet

For access to the latest documents please follow:www.e-t-a.de/en053

Compliances

1

Technical data

For further details please see: www.e-t-a.de/ti_e	
Voltage rating	AC 250 V; 3 AC 433 V (50/60 Hz); DC 65 V (UL: AC 277/480 V; DC 65 V)
Current rating range	0.1...32 A for curves M1, T1 0.1...16 A for curves F1, F2
Auxiliary circuit	1 A, AC 240 V / DC 65 V, resistive (min. 10 V / 10 mA)
Typical life 3 AC 433 V; AC 250 V: DC 65 V: 3 AC 433 V; AC 250 V:	 0.1...25 A 10,000 operations at 1 x I_N, inductive 0.1...32 A 10,000 operations at 1 x I_N, inductive 32 A 6,000 operations at 1 x I_N, resistive
Ambient temperature	-30...+60 °C (-22...+140 °F) T 60
Insulation co-ordination (IEC 60664 and 60664 A)	rated impulse withstand voltage 2.5 kV; pollution degree 2 reinforced insulation in operating area
Dielectric strength (IEC 60664 and 60664A) operating area main/aux. circuit pole/pole	 test voltage AC 3,000 V AC 3,000 V AC 1,500 V
Insulation resistance	> 100 MΩ (DC 500 V)
Interrupting capacity I_{cn} curves F1, F2, M1, T1:	0.1...5 A 400 A 6...32 A 800 A 0.1...16 A 2,500 A (at DC 32 V)

Interrupting capacity (UL 1077)

I_N	0.1...16 A	20...32 A
AC 277 V *1-pole*	5,000 A	2,000 A
AC 277/480 V *2-/3-pole*	5,000 A	2,000 A
DC 65 V	2,000 A	2,000 A

Degree of protection (IEC 60529/DIN 40050)	operating area IP30 terminal area IP20
Vibration curves F1, F2: curves M1, T1:	3 g (57-500 Hz), ± 0.23 mm (10-57 Hz) 5 g (57-500 Hz), ± 0.38 mm (10-57 Hz) to IEC 60068-2-6, test Fc 10 frequency cycles/axis
Shock curves F1, F2: curves M1, T1:	25 g (11 ms), directions 1, 2, 3, 4, 5 10 g (11 ms), direction 6 25 g (11 ms), directions 1, 2, 3, 4, 5 20 g (11 ms), direction 6 to IEC 60068-2-27, test Ea
Corrosion	96 hours at 5 % salt mist to IEC 60068-2-11, test Ka
Humidity	240 hours at 95 % RH to IEC 60068-2-78, test Cab
Mass	approx. 60 g per pole

Standard current ratings and typical internal resistance values

Current rating (A)	Internal resistance (Ω)			
	F1	F2	M1	T1
	fast acting for DC only	fast acting delay for AC + DC	standard for AC+DC	delayed low resistance for AC only
0.1	162	162	92	81
0.2	39.3	39.3	26.1	24.2
0.3	17.5	17.5	11.6	10.4
0.4	9.2	9.2	6.6	6.0
0.5	6.8	6.8	4.1	3.9
0.6	4.2	4.2	3	2.7
0.8	2.8	2.8	1.65	1.53
1	1.6	1.6	1.10	0.98
1.5	0.78	0,78	0.47	0.42
2	0.42	0,42	0.28	0.24
2.5	0.26	0.26	0.183	0.17
3	0.18	0.18	0.124	0.12
4	0.12	0.12	0.077	0.073
5	0.092	0.092	0.063	0.055
6	0.054	0.054	0.045	0.039
8	0.025	0.025	≤ 0.02	≤ 0.02
10	0.022	0.02	≤ 0.02	≤ 0.02
12	≤ 0.02	≤ 0.02	≤ 0.02	≤ 0.02
16	≤ 0.02	≤ 0.02	≤ 0.02	≤ 0.02
20	-	-	≤ 0.02	≤ 0.02
25	-	-	≤ 0.02	≤ 0.02
32	-	-	≤ 0.02	≤ 0.02

Approvals

Authority	Standard	Rated voltage	Current ratings
VDE	IEC/EN 60934	3 AC 433 V AC 250 V DC 65 V	0.1 A…32 A 0.1 A…32 A 0.1 A…32 A
UL	UL 1077	AC 277/480 V AC 277 V DC 65 V	0.1 A…32 A 0.1 A…32 A 0.1 A…32 A
CSA	C22.2 No 235	AC 277/480 V AC 277 V DC 65 V	0.1 A…32 A 0.1 A…32 A 0.1 A…32 A
CQC	GB 17701	AC 250/433 V AC 250 V DC 65 V	0.1 A…32 A 0.1 A…32 A 0.1 A…32 A
DNV GL	IEC 60934, DNVGL-CG 0339	3 AC 433 V AC 250 V DC 65 V	0.1 A…32 A 0.1 A…32 A 0.1 A…32 A
KTL	KC60934	AC 250 V, 1-pole AC 433 V, 2-pole	0.1 A...16 A 0.1 A...16 A

Preferred types

Preferred types are E-T-A products most frequently used by E-T-A customers. We manufacture E-T-A preferred types in particularly high volumes. Our preferred types are supplied at shorter lead times than non-standard versions.

Preferred types	Standard current ratings (A)										
1-pole	**0.5**	**1**	**2**	**3**	**4**	**5**	**6**	**8**	**10**	**16**	**20**
2210-T210-K0M1-H121-	x	x	x	x	x	x	x	x	x	x	x
2-pole	**0.5**	**1**	**2**	**3**	**4**	**5**	**6**	**8**	**10**	**16**	**20**
2210-T220-K0M1-H221-			x		x		x		x	x	x

Ordering information

Type No.
2210 single and multipole thermal-magnetic circuit breaker
- **Mounting**
  - **T** rail mounting
- **Actuator design**
  - **2** toggle
- **Number of poles**
  - **1** single pole protected
  - **2** 2-pole protected
  - **3** 3-pole protected
- **Accessories**
  - **0** without accessories
- **Terminal design (main contacts)**
  - **K0** screw terminals
- **Characteristic curve**
  - **F1** fast acting: therm.1.01-1.4xI_N; magn.2-4xI_N DC (DC only)
  - **F2** fast acting: therm.1.01-1.4xI_N; magn.3,5-6,5xI_N AC/4,5-8,5xI_N DC
  - **M1** standard delay: therm. 1.01-1.4xI_N; magn. 6-12xI_N AC, 7.8-15.6xI_N DC
  - **T1** delayed: therm. 1.01-1.4xI_N; magn. 10-20xI_N AC
- **Auxiliary contact design**
  - **H** without intermediate position
- **Auxiliary contacts**
  - **1** with auxiliary contacts
  - **2** auxiliary contacts on pole 1 only (multipole devices)
- **Auxiliary contact function (see diagrams)**
  - **2** 1 N/O contact
  - **3** 1 N/C contact
- **Auxiliary contact - terminal design**
  - **1** screw terminals
- **Current ratings**
  - **0.1...32 A**

2210 - T 2 1 0 - K0 M1- H 1 2 1 - 10 A ordering example

Please be informed that we have minimum ordering quantities to be observed.

Custom designed versions

Looking for a version you cannot find in our ordering number code? Please get in touch. We will be pleased to find a solution for you.

1

Dimensions

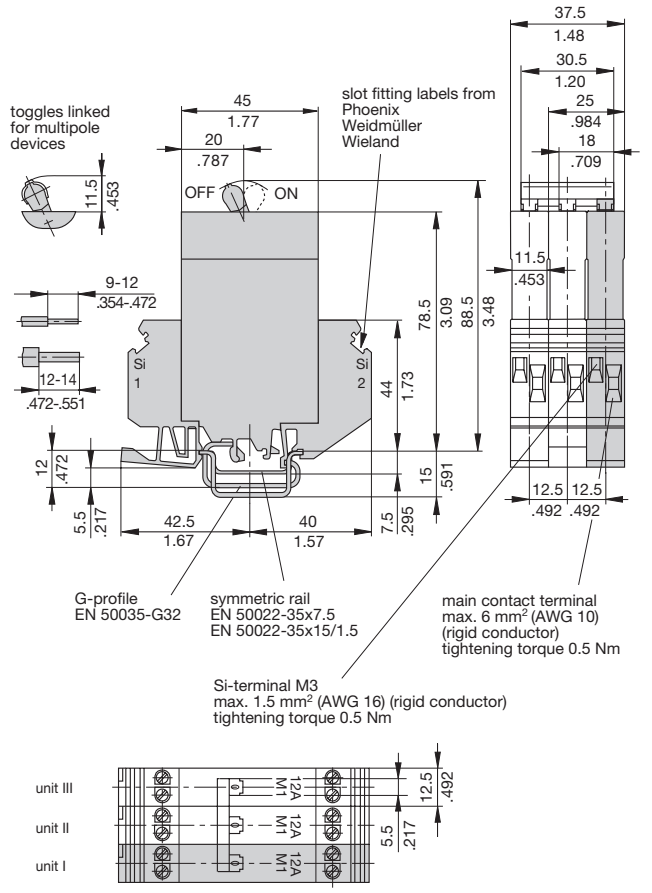

Cable cross section

Conductor	Main contacts 1 & 2	Aux. contact IN
rigid	min. 0.2 mm² max. 6 mm²	0.2 mm² 1.5 mm²
flexible	min. 0.2 mm² max. 4 mm²	0.2 mm² 1.0 mm²
flexible with wire end ferrule without plastic sleeve	min. 0.25 mm² max. 4 mm²	0.25 mm² 1.0 mm²
flexible with wire end ferrule with plastic sleeve	min. 0.25 mm² max. 2.5 mm²	0.25 mm² 0.75 mm²

Installation drawing

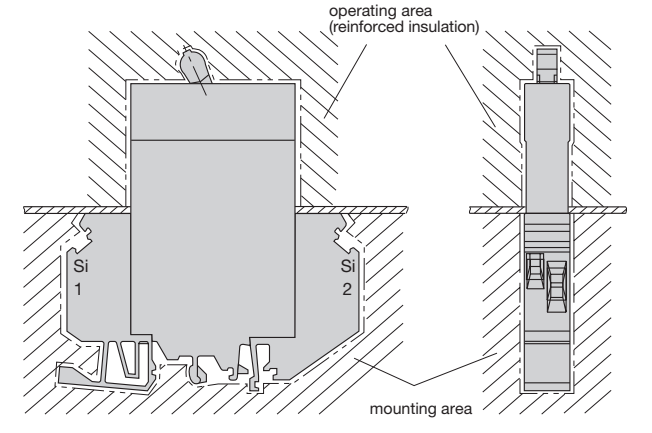

Internal connection diagrams

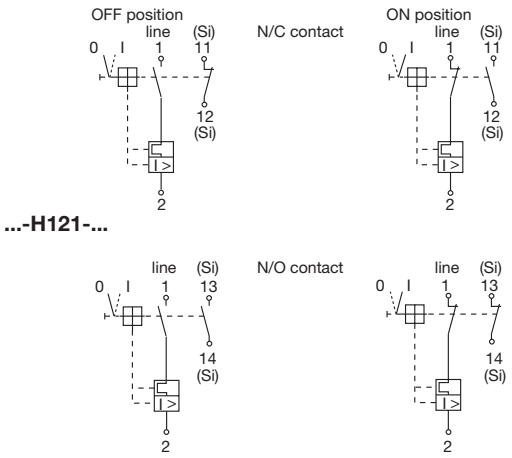

Shock directions

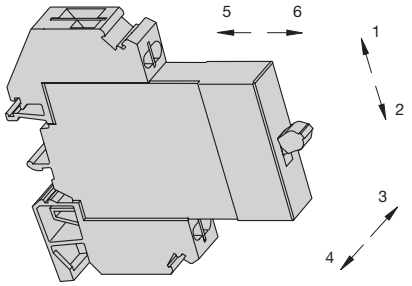

This is a metric design and millimeter dimensions take precedence (mm/inch)

Typical time/current characteristics

-F1 0.1…16 A **DC only**

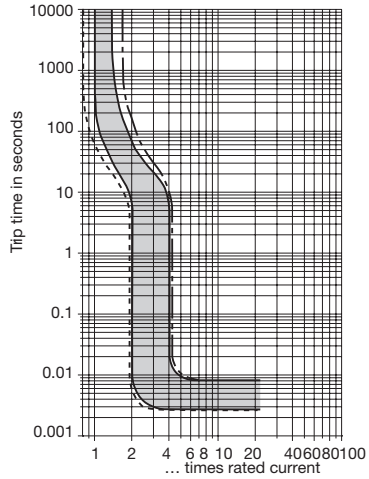

-F2 0.1…7.5 A **AC/ DC[1)]**

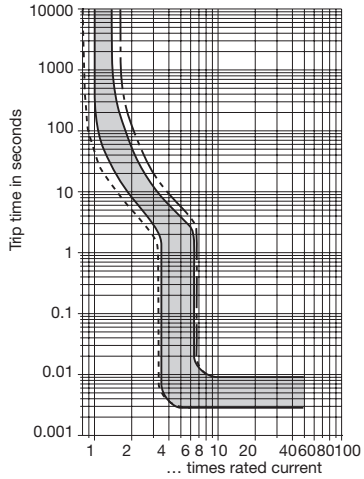

-F2 8…16 A **AC/ DC[1)]**

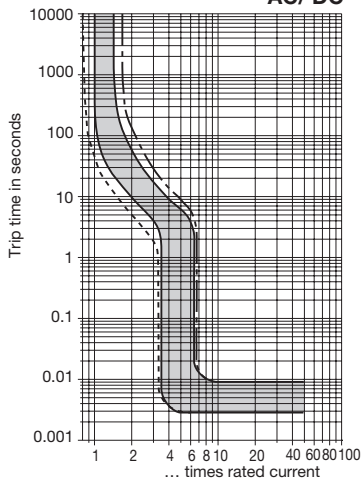

– – – +60 °C +140 °F ——— +23 °C +73.4 °F —— - - -30 °C -22 °F

[1)] Magnetic tripping currents are increased by 30% on DC supplies.

1

Typical time/current characteristics

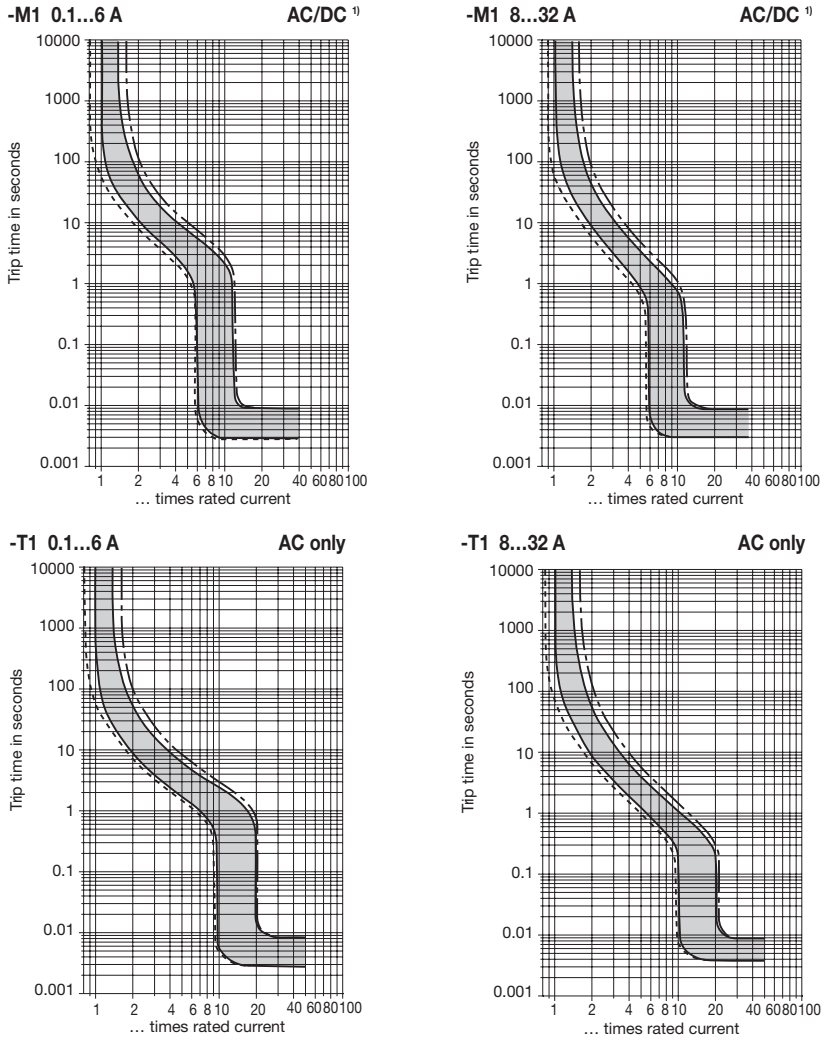

The time/current characteristic curve depends on the ambient temperature prevailing. In order to eliminate nuisance tripping, please multiply the circuit breaker current ratings by the derating factor shown below. See also section Technical information.

Ambient temp. °F / °C	-22 / -30	-4 / -20	+14 / -10	+32 / 0	+73.4 / +23	+86 / +30	+104 / +40	+122 / +50	+140 / +60
Derating factor	0.76	0.79	0.83	0.88	1	1.04	1.11	1.19	1.29

Multi pole devices: all poles symmetrically loaded. With single pole overload, thermal tripping will be at max. 1.7 x I_N with curves F1, F2 and M1.

1) Magnetic tripping currents are increased by 30 % on DC supplies (curves F2, M1).

Accessories

Connector bus links -K10
X210 589 01/ 2.5 mm², (AWG 14) (black) up to 20 A max. load
X210 589 02/ 1.5 mm², (AWG 16) (brown) up to 13 A max. load

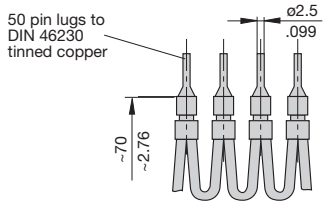

Busbar 1-pole, 90° X 222 540 11
The one metre long busbars can be cut to suitable lengths.
Plug-on caps can be fitted on the ends to provide brush contact protection. cross section: 16 mm²

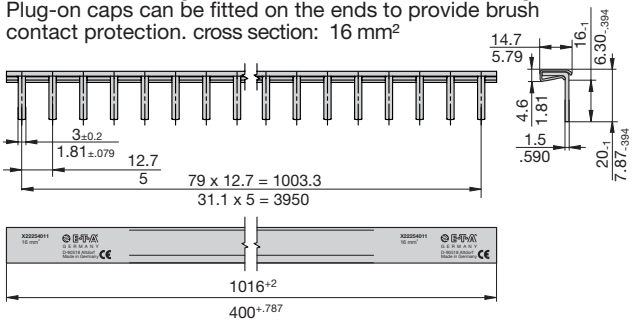

Busbar 1-pole Y 308 498 01
cross section: 16 mm²

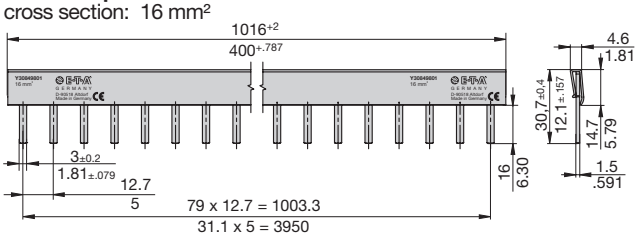

Busbar for 1-pole devices
Firmly mounted supply terminals, placed at fixed distances
(1 supply terminal every 7 modules)
For cable feed from the side
Ideal for applications with high vibration requirements
Y31270901 cross section: 16 mm²

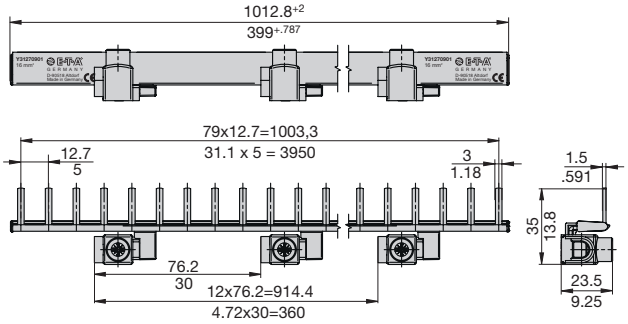

Plug-on cap, 1-pole
Y 307 851 01

Busbar 2-pole
Y 308 499 01 cross section: 16 mm²

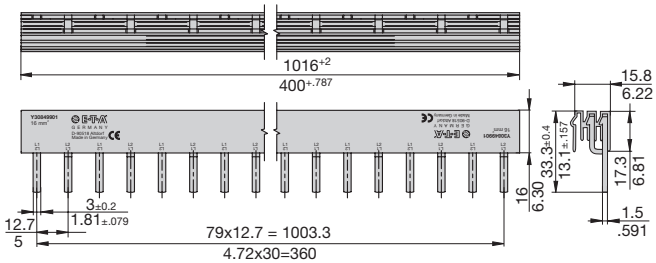

Plug-on cap, busbar 2/3-pole
Y 308 506 01

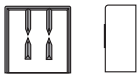

Busbar 3-pole
Y 308 500 01
cross section: 16 mm²

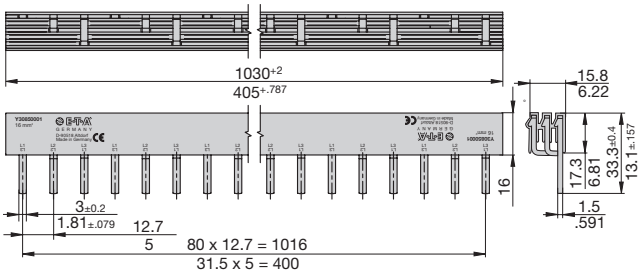

Plug-on cap, busbar 2/3-pole
Y 308 506 01

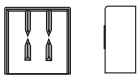

Supply terminal
Y 308 503 01
I_{max} 63 A with 1-pole busbar,
50 A with multipole busbar
Max. tightening torque of terminal screw 2 Nm
Max. cable cross section: 25 mm² / single strand
16 mm² / multistrand
with wire end ferrule

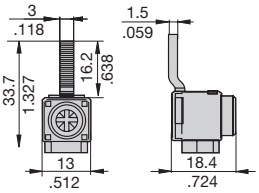

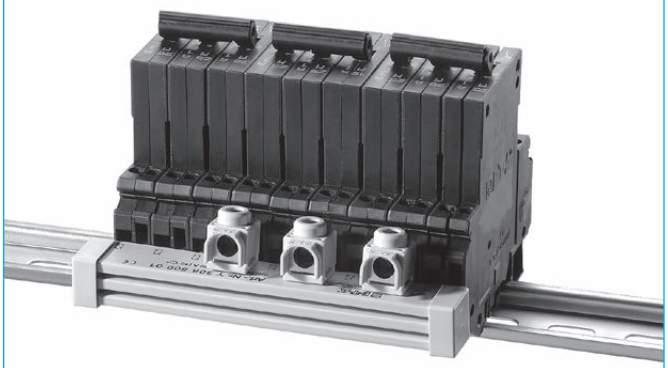

Caution:
When using multipole busbars please leave at least one pole's width between two adjacent line entry terminals.

This is a metric design and millimeter dimensions take precedence ($\frac{mm}{inch}$)

All dimensions without tolerances are for reference only. In the interest of improved design, performance and cost effectiveness the right to make changes in these specifications without notice is reserved.Product markings may not be exactly as the ordering codes. Errors and omissions excepted.

ООО «ЛайфЭлектроникс» “LifeElectronics” LLC

ИНН 7805602321 КПП 780501001 Р/С 40702810122510004610 ФАКБ "АБСОЛЮТ БАНК" (ЗАО) в г.Санкт-Петербурге К/С 30101810900000000703 БИК 044030703

Компания «Life Electronics» занимается поставками электронных компонентов импортного и отечественного производства от производителей и со складов крупных дистрибьюторов Европы, Америки и Азии.

С конца 2013 года компания активно расширяет линейку поставок компонентов по направлению коаксиальный кабель, кварцевые генераторы и конденсаторы (керамические, пленочные, электролитические), за счёт заключения дистрибьюторских договоров

Мы предлагаем:

- *Конкурентоспособные цены и скидки постоянным клиентам.*
- *Специальные условия для постоянных клиентов.*
- *Подбор аналогов.*
- *Поставку компонентов в любых объемах, удовлетворяющих вашим потребностям.*

- *Приемлемые сроки поставки, возможна ускоренная поставка.*
- *Доставку товара в любую точку России и стран СНГ.*
- *Комплексную поставку.*
- *Работу по проектам и поставку образцов.*
- *Формирование склада под заказчика.*

- *Сертификаты соответствия на поставляемую продукцию (по желанию клиента).*
- *Тестирование поставляемой продукции.*
- *Поставку компонентов, требующих военную и космическую приемку.*
- *Входной контроль качества.*
- *Наличие сертификата ISO.*

В составе нашей компании организован Конструкторский отдел, призванный помогать разработчикам, и инженерам.

Конструкторский отдел помогает осуществить:

- *Регистрацию проекта у производителя компонентов.*
- *Техническую поддержку проекта.*
- *Защиту от снятия компонента с производства.*
- *Оценку стоимости проекта по компонентам.*
- *Изготовление тестовой платы монтаж и пусконаладочные работы.*

Тел: +7 (812) 336 43 04 (многоканальный)
Email: org@lifeelectronics.ru

www.lifeelectronics.ru