DATASHEET

PORTABLE CONSUMER CODEC

LOW-POWER, HIGH-FIDELITY INTEGRATED CODEC

ACS422x00

DESCRIPTION

The ACS422x00 is a low-power, high-fidelity integrated CODEC targeted at portable applications such as tablet computers, personal navigation devices, portable projectors and speaker docks. In addition to a high-fidelity low-power CODEC, the device integrates a DDX™ class-D speaker amplifier, a true cap-less headphone amplifier, and four programmable system PLLs to enable the timing management of the systems applications processor, USB interface, secondary audio and other subsystems. Beyond high-fidelity for portable systems, the device offers an enriched "audio presence" through built-in audio processing capability The ACS422x00 has been designed with rapid customization in mind. IDT is able to rapidly provide varying levels of integration, additional audio processing, more or fewer PLLs, etc, according to the needs of large markets or customers.

TARGET APPLICATIONS

- **Tablet Computers**
- **Portable Navigation Devices**
- **Personal Media Players**
- **Portable Projectors**
- **Speaker Docks**

FEATURES

- **High fidelity 24-bit stereo CODEC**
  - DAC 102dB SNR; THD+N better than -82dB
  - ADC 90dB SNR, THD + N better than -80dB
- **Built in audio controls and processing**
  - 3D stereo enhancement
  - Dual (cascaded) stereo 6-band parametric equalizers
  - Programmable Compressor/Limiter/Expander
  - Psychoacoustic Bass and Treble enhancement processing
- **Filterless Stereo DDX™ Class D Speaker Driver**
  - 1W/channel (8Ω) or 2W/channel (4Ω), 0.05% THD+N typical
  - Tri-state DDX™ Class D achieves low EMI and high efficiency
  - >80% efficiency at 1W
  - Spread spectrum support for reduced EMI output power mode
  - Anti-Pop circuitry
- **On-chip true cap-less headphone driver**
  - 35 mW output power (16Ω)
  - Charge-pump allows true ground centered outputs
  - SNR of 102dB
- **I2S data interface**
- **Microphone/line-in interface**
  - Analog microphone or line-in inputs
  - Digital microphone (ACS422D00)
  - Automatic level control
- **4 on-chip low-jitter PLLs for internal and system timing**
  - Multiple frequency options
  - Spread spectrum support
- **Low power with built in power management**
  - 1.7 V CODEC supports 1Vrms
  - Very low standby and no-signal power consumption
  - 1.8V digital / 1.7V analog supply for low power
- **2-wire (I^2C compatible) control interface**
- **68-pin dual row 6x6 mm Thermal Leadless Array package**

DDX™ and the DDX logo are trademarks of Apogee Technology.

©2011 INTEGRATED DEVICE TECHNOLOGY, INC.

TABLE OF CONTENTS

1. OVERVIEW 8
1.1. Block Diagram 8
1.2. Audio Outputs 8
1.3. Audio Inputs 9
1.4. On-Chip PLLs 9
2. POWER MANAGEMENT 10
2.1. Control Registers 10
2.2. Stopping the Master Clock 11
3. OUTPUT AUDIO PROCESSING 12
3.1. DC Removal 12
3.2. Volume Control 13
3.3. Digital DAC Volume Control 14
3.4. Parametric Equalizer 14
3.4.1. Prescaler & Equalizer Filter 15
3.4.2. EQ Registers 16
3.4.3. Equalizer, Bass, Treble Coefficient & Equalizer Prescaler RAM 17
3.5. Gain and Dynamic Range Control 20
3.6. Limiter 21
3.7. Compressor 21
3.7.1. Configuration 22
3.7.2. Controlling parameters 23
3.7.3. Overview 23
3.7.4. Limiter/Compressor Registers 25
3.7.5. Expander Registers 27
3.8. Output Effects 28
3.9. Stereo Depth (3-D) Enhancement 28
3.10. Psychoacoustic Bass Enhancement 29
3.11. Treble Enhancement 30
3.12. Mute and De-Emphasis 31
3.13. Mono Operation and Phase Inversion 31
3.13.1. DAC Control Register 31
3.13.2. Interpolation and Filtering 32
3.14. Analog Outputs 33
3.14.1. Headphone Output 33
3.14.2. Speaker Outputs 34
3.14.3. DDX™Class D Audio Processing 34
3.15. Other Output Capabilities 39
3.15.1. Audio Output Control 40
3.15.2. Headphone Switch 40
3.15.3. Headphone Operation 41
3.15.4. EQ Operation 41
3.16. Thermal Shutdown 42
3.16.1. Algorithm description: 42
3.16.2. Thermal Trip Points. 42
3.16.3. Temperature Limit State Diagram: 43
3.16.4. Instant Cut Mode 43
3.16.5. Short Circuit Protection 44
3.16.6. Thermal Shutdown Registers 44
4. INPUT AUDIO PROCESSING 47
4.1. Analog Inputs 47
4.1.1. Input Registers 48
4.2. Mono Mixing and Output Configuration 48
4.2.1. ADC Registers 49
4.3. Microphone Bias 50
4.3.1. Microphone Bias Control Register 50
4.4. Programmable Gain Control 50
4.4.1. Input PGA Software Control Register. 51

©2011 INTEGRATED DEVICE TECHNOLOGY, INC.

4.5. ADC Digital Filter 51
4.5.1. ADC Signal Path Control Register 53
4.5.2. ADC High Pass Filter Enable modes 53
4.6. Digital ADC Volume Control 53
4.6.1. ADC Digital Registers 54
4.7. Automatic Level Control (ALC) 54
4.7.1. ALC Operation 54
4.7.2. ALC Registers 56
4.7.3. Peak Limiter 57
4.7.4. Input Threshold 57
4.8. Digital Microphone Support 57
4.8.1. DMIC Register 60
5. DIGITAL AUDIO AND CONTROL INTERFACES 61
5.1. Data Interface 61
5.2. Master and Slave Mode Operation 61
5.3. Audio Data Formats 62
5.4. Left Justified Audio Interface 62
5.5. Right Justified Audio Interface (assuming n-bit word length) 62
5.6. I2S Format Audio Interface 63
5.7. Data Interface Registers 63
5.7.1. Audio Data Format Control Register 63
5.7.2. Audio Interface Output Tri-state 64
5.7.3. Audio Interface Bit Clock and LR Clock configuration 64
5.7.4. Bit Clock and LR Clock Mode Selection 65
5.7.5. ADC Output Pin State 66
5.7.6. Audio Interface Control 3 Register 66
5.8. Bit Clock Mode 66
5.9. Control Interface 67
5.9.1. Register Write Cycle 67
5.9.2. Multiple Write Cycle 68
5.9.3. Register Read Cycle 68
5.9.4. Multiple Read Cycle 69
5.9.5. Device Addressing and Identification 69
6. AUDIO CLOCK GENERATION 71
6.1. Internal Clock Generation (ACLK) 71
6.2. ACLK Clocking and Sample Rates 71
6.3. DAC/ADC Modulator Rate Control 72
7. PLL SECTION 74
7.1. PLL Block diagram 74
8. CHARACTERISTICS 75
8.1. Electrical Specifications 75
8.1.1. Absolute Maximum Ratings 75
8.1.2. Recommended Operating Conditions 75
8.2. Device Characteristics 76
8.3. PLL Section DC Electrical Characteristics 78
8.4. PLL Section AC Timing Specs 78
8.5. Typical Power Consumption 79
8.6. Low Power Mode Power Consumption 79
9. REGISTER MAP 80
10. PIN INFORMATION 82
10.1. ACS422A00 Pin Diagram 82
10.2. ACS422D00 Pin Diagram 83
10.3. Pin Tables 84
10.3.1. Power Pins 84
10.3.2. Reference Pins 84
10.3.3. Analog Input Pins 85
10.3.4. Analog Output Pins 85
10.3.5. Data and Control Pins 85
10.3.6. PLL Pins 86

©2011 INTEGRATED DEVICE TECHNOLOGY, INC.

11. PACKAGE INFORMATION 87
11.1. Package Drawing 87
11.2. Pb Free Process- Package Classification Reflow Temperatures 87
12. APPLICATION INFORMATION 88
13. ORDERING INFORMATION 88
14. DISCLAIMER 88
15. DOCUMENT REVISION HISTORY 89

©2011 INTEGRATED DEVICE TECHNOLOGY, INC.

LIST OF FIGURES

Figure 1. Block Diagram 8
Figure 2. Output Audio Processing 12
Figure 3. Prescaler & EQ Filters 15
Figure 4. 6-Tap IIR Equalizer Filter 15
Figure 5. DAC Coefficient RAM Write Sequence 17
Figure 6. DAC Coefficient RAM Read Sequence 18
Figure 7. Gain Compressor, Output vs Input 21
Figure 8. Compressor block diagram 23
Figure 9. 3-D Channel Inversion 29
Figure 10. Bass Enhancement 29
Figure 11. Treble Enhancement 30
Figure 12. Interpolation and Filtering 32
Figure 13. Constant Output Power Error 36
Figure 14. Constant Output Power nominal and high/low 36
Figure 15. Temp sense volume adjustment algorithm 43
Figure 16. Input Audio Processing 47
Figure 17. Mic Bias 50
Figure 18. ADC Filter Data path 51
Figure 19. ADC Input processing 52
Figure 20. ALC Operation 54
Figure 21. Single Digital Microphone (data is ported to both left and right channels) 59
Figure 22. Stereo Digital Microphone Configuration 60
Figure 23. Master mode 61
Figure 24. Slave mode 61
Figure 25. Left Justified Audio Interface (assuming n-bit word length) 62
Figure 26. Right Justified Audio Interface (assuming n-bit word length) 62
Figure 27. I2S Justified Audio Interface (assuming n-bit word length) 63
Figure 28. Bit Clock mode 67
Figure 29. 2-Wire Serial Control Interface 68
Figure 30. Multiple Write Cycle 68
Figure 31. Read Cycle 69
Figure 32. Multiple Read Cycle 69
Figure 33. PLL Block Diagram 74
Figure 34. ACS422A00 Pinout 82
Figure 35. ACS422D00 Pinout 83
Figure 36. Package Outline 87

©2011 INTEGRATED DEVICE TECHNOLOGY, INC.

LIST OF TABLES

Table 1. Power Management Register 1 10
Table 2. Power Management Register 2 10
Table 3. Power Management Register1 -- Master Clock Disable 11
Table 4. DC_COEF_SEL Register 12
Table 6. Volume Update Control Register 13
Table 5. CONFIG0 Register 13
Table 7. Gain Control Register 14
Table 8. DAC Volume Control Registers 14
Table 9. CONFIG1 Register 16
Table 10. DACCRAM Read/Write Registers 16
Table 11. DACCRAM Address Register 17
Table 12. DACCRAM Status Register 17
Table 13. DACCRAM EQ Addresses 19
Table 14. DACCRAM Bass/Treble Addresses 20
Table 15. CLECTL Register 25
Table 16. MUGAIN Register 25
Table 17. COMPTH Register 26
Table 18. CMPRAT Register 26
Table 19. CATKTCL Register 26
Table 20. CATKTCH Register 26
Table 21. CRELTCL Register 26
Table 22. CRELTCH Register 26
Table 23. LIMTH Register 26
Table 24. LIMTGT Register 27
Table 25. LATKTCL Register 27
Table 26. LATKTCH Register 27
Table 27. LRELTCL Register 27
Table 28. LRELTCH Register 27
Table 29. EXPTH Register 27
Table 30. EXPRAT Register 27
Table 31. XATKTCL Register 28
Table 32. XATKTCH Register 28
Table 33. XRELTCL Register 28
Table 34. XRELTCH Register 28
Table 35. FX Control Register 28
Table 36. CNVRTR1 Register 31
Table 37. HPVOL L/R Registers 33
Table 38. SPKVOL L/R Registers 34
Table 39. Constant Output Power 1 Register 37
Table 40. Constant Output Power 2 Register 37
Table 41. Constant Output Power 3 Register 38
Table 42. CONFIG0 Register 38
Table 43. PWM0 Register 38
Table 44. PWM1 Register 39
Table 45. PWM2 Register 39
Table 46. PWM3 Register 39
Table 47. Power Management 2 Register 40
Table 48. Additional Control Register 41
Table 49. Headphone Operation 41
Table 50. EQ Operation 41
Table 51. Additional Control Register 44
Table 52. THERMTS Register 45
Table 53. THERMTSPKR1 Register 46
Table 54. THERMTSPKR2 Register 46
Table 55. Input Software Control Register 48
Table 56. INMODE Register 49
Table 57. CNVRTR0 Register 49
Table 58. AIC2 Register 49

©2011 INTEGRATED DEVICE TECHNOLOGY, INC.

Table 59. Power Management 1 Register - Mic Bias Enable 50
Table 60. INVOL L&R Registers 51
Table 61. CNVRTR0 Register 53
Table 62. ADC HPF Enable 53
Table 63. L/R ADC Digital Volume Registers 54
Table 64. ALC Control Registers 56
Table 65. NGATE Register 57
Table 66. DMIC Clock 58
Table 67. Valid Digital Mic Configurations 59
Table 68. DMICCTL Register 60
Table 69. AIC1 Register 63
Table 70. AIC2 Register 64
Table 71. Bit Clock and LR Clock Mode Selection 65
Table 72. ADC Data Output pin state 66
Table 73. AIC3 Register 66
Table 74. Master Mode BCLK Frequency Control Register 67
Table 75. DEVADRI Register 69
Table 76. DEVID H&L Registers 70
Table 77. REVID Register 70
Table 78. RESET Register 70
Table 79. ADCSR Register 71
Table 80. DACSR Register 72
Table 81. ACLK and Sample Rates 72
Table 82. CONFIG0 Register 73
Table 83. SDM Rates 73
Table 84. Electrical Specification: Maximum Ratings 75
Table 85. Recommended Operating Conditions 75
Table 86. Device Characteristics 76
Table 87. PLL Section DC Characteristics 78
Table 88. PLL Section AC Characteristics 78
Table 89. Typical Power Consumption 79
Table 90. Low power mode power consumption 79
Table 91. Register Map 80
Table 92. Power Pins 84
Table 93. Reference Pins 84
Table 94. Analog Input Pins 85
Table 95. Analog Output Pins 85
Table 96. Data and Control Pins 85
Table 97. PLL Pins 86
Table 98. Reflow Temperatures 87

©2011 INTEGRATED DEVICE TECHNOLOGY, INC.

1. OVERVIEW

1.1. Block Diagram

The ACS422x00 is an advanced low power codec with integrated amplifiers and timing generators. To support the design of audio subsystems in a portable device, the ACS422x00 features an intelligent codec architecture with advanced audio processing algorithms, integrated with a true capless headphone amplifier, 1W/channel (8Ω) or 2W/channel (4Ω) filterless DDX™ stereo class D amplifier, and microphone interface with programmable gain.

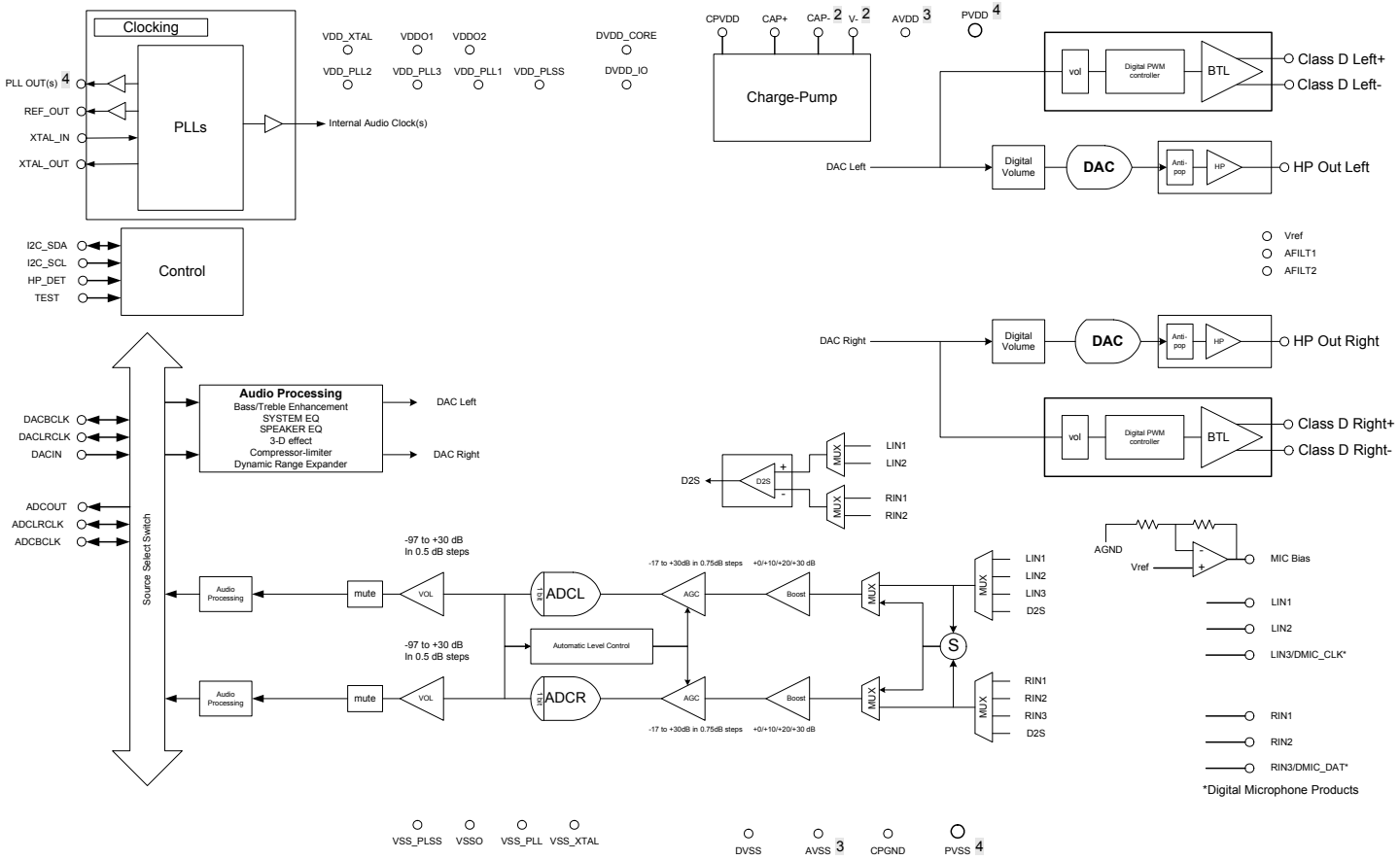

Figure 1. Block Diagram

1.2. Audio Outputs

The ACS422x00 provides multiple outputs for analog sound. Audio outputs include:

- A 1W/channel (8Ω) or 2W/channel (4Ω) **filterless DDX™ Class D amplifier**. This amplifier is capable of driving the speakers typically found in portable equipment, providing high fidelity, high efficiency, and excellent sound quality.
- A **line-out/capless stereo headphone port** with ground referenced outputs, capable of driving headphones without requiring an external DC blocking capacitor.

Each endpoint features independent volume controls, including a soft-mute capability which can slowly ramp up or down the volume changes to avoid unwanted audio artifacts.

©2011 INTEGRATED DEVICE TECHNOLOGY, INC.

The ACS422x00 output signal paths consist of digital filters, DACs and output drivers. The digital filters and DACs are enabled when the ACS422x00 is in ‘playback only’ or ‘record and playback’ mode. The output drivers can be separately enabled by individual control bits.

The digital filter and audio processing block processes the data to provide volume control and numerous sound enhancement algorithms. Two high performance sigma-delta audio DACs convert the digital data into analog.
The digital audio data is converted to oversampled bit streams using 24-bit digital interpolation filters, which then enters sigma-delta DACs, and become converted to high quality analog audio signals.

To enhance the sound available from the small, low-power speakers typically found in a portable device, the ACS422x00 provides numerous audio enhancement capabilities. The ACS422x00 features dual, independent, programmable left/right 6-band equalization, allowing the system designer to provide an advanced system equalizer to accommodate the specific speakers and enclosure design. A compressor/limiter features programmable attack and release thresholds, enabling the system designer to attenuate loud noise excursions to avoid speaker artifacts, thus allowing the underlying content to be played at a louder volume without distortion. For compressed audio, a programmable expander is available to help restore the dynamic range of the original content. A stereo depth enhancement algorithm allows common left/right content (e.g. dialog) to be attenuated separately from other content, providing a perceived depth separation between background and foreground audio. Psychoacoustic bass and treble enhancement algorithms achieve a rich, full tone even from originally compressed content, and even with speakers generally unable to play low-frequency sounds.

1.3. Audio Inputs

On the analog input side, the device features multiple line-in/microphone inputs, which can be used for analog microphone, or line-in inputs. In addition, digital microphones are also supported. The device provides input gain control, separate volume controls, automatic leveling capability, and programmable microphone boost to smooth input recording. A programmable silence “floor” or “threshold” can be set to minimize background noise.

1.4. On-Chip PLLs

Beyond audio processing, the ACS422x00 also provides a higher level of system integration. It contains a low-power, low-jitter clock synthesizer developed for portable systems to replace multiple crystals and crystal oscillators. 4 PLLs provide internal timing and five high-quality, high-frequency clock outputs for other major elements of a portable system. Using a single fundamental mode crystal, the ACS422x00 can generate a reference output, and selectable outputs (one with spread spectrum) to drive a local applications processor and other peripherals.

©2011 INTEGRATED DEVICE TECHNOLOGY, INC.

2. POWER MANAGEMENT

2.1. Control Registers

The ACS422x00 has control registers to enable system software to control which functions are active. To minimize power consumption, unused functions should be disabled. To avoid audio artifacts, it is important to enable or disable functions in the correct order.

Register Address	Bit	Label	Type	Default	Description
0x1A Power Management 1	7	BSTL	RW	0	Analog in Boost Left 0 = Power down, 1 = Power up
	6	BSTR	RW	0	Analog in Boost Right 0 = Power down, 1 = Power up
	5	PGAL	RW	0	Analog in PGA Left 0 = Power down, 1 = Power up
	4	PGAR	RW	0	Analog in PGA Right 0 = Power down, 1 = Power up
	3	ADCL	RW	0	ADC Left 0 = Power down,1 = Power up
	2	ADCR	RW	0	ADC Right 0 = Power down. 1 = Power up
	1	MICB	RW	0	MICBIAS 0 = Power down, 1 = Power up
	0	DIGENB	RW	0	Master clock disable 0: master clock enabled, 1: master clock disabled

Table 1. Power Management Register 1

Register Address	Bit	Label	Type	Default	Description
0x1B Power Management 2	7	D2S	RW	0	Analog in D2S AMP 0 = Power down, 1 = Power up
	6	HPL	RW	0	LHP Output Buffer + DAC 0 = Power down, 1 = Power up
	5	HPR	RW	0	RHP Output Buffer + DAC 0 = Power down, 1 = Power up
	4	SPKL	RW	0	LSPK Output Buffer 0 = Power down, 1 = Power up
	3	SPKR	RW	0	RSPK Output Buffer 0 = Power down, 1 = Power up
	2	INSELL	RW	0	Analog in Select Mux Left 0 = Power down, 1 = Power up
	1	INSELR	RW	0	Analog in Select Mux Right 0 = Power down, 1 = Power up
	0	VREF	RW	0	VREF (necessary for all other functions) 0 = Power down, 1 = Power up

Table 2. Power Management Register 2

©2011 INTEGRATED DEVICE TECHNOLOGY, INC.

2.2. Stopping the Master Clock

In order to minimize digital core power consumption, the master clock may be stopped in Standby and OFF modes by setting the DIGENB bit (R25, bit 0).

Register Address	Bit	Label	Type	Default	Description
0x1A Power Management 1	0	DIGENB	RW	0	Master clock disable 0 = master clock enabled, 1 = master clock disabled

Table 3. Power Management Register1 -- Master Clock Disable

Note: Before DIGENB can be set, the control bits ADCL, ADCR, HPL, HPR, SPKL, and SPKR must be set to zero and a waiting time of 100ms must be observed to allow port ramping/gain fading to complete. Any failure to follow this procedure may cause pops or, if less than 1mS, may prevent the DACs and ADCs from re-starting correctly.

©2011 INTEGRATED DEVICE TECHNOLOGY, INC.

3. OUTPUT AUDIO PROCESSING

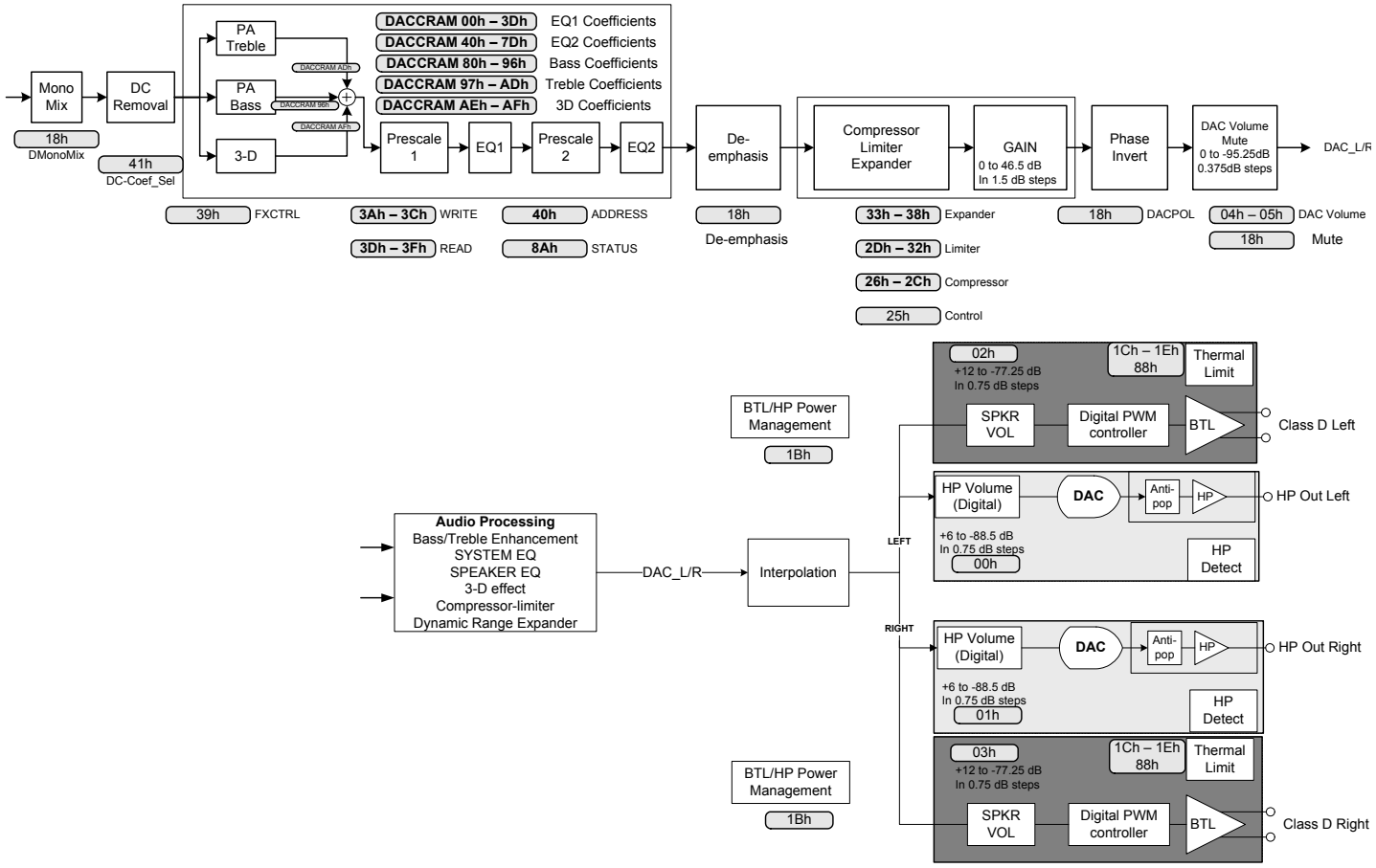

Figure 2. Output Audio Processing

3.1. DC Removal

Before processing, a DC removal filter removes the DC component from the incoming audio data. The DC removal filter is programmable.

Register Address	Bit	Label	Type	Default	Description
R65 (41h) DCOFSEL	7:3	–	R	0	Reserved for future use.

	2:0	-	RW	5	0: dc_coef = 24'h100000; //2^^-3 = 0.125
					1: dc_coef = 24'h040000;
					2: dc_coef = 24'h010000;
					3: dc_coef = 24'h004000;
					4: dc_coef = 24'h001000;
					5: dc_coef = 24'h000400;
					6: dc_coef = 24'h000100; //2^^-15 = 0.00030517
					7: dc_coef = 24'h000040; //2^^-17

Table 4. DC_COEF_SEL Register

©2011 INTEGRATED DEVICE TECHNOLOGY, INC.

Register Address	Bit	Label	Type	Default	Description
R31 (1Fh) CONFIG0	7:6	ASDM[1:0]	RW	10h	ADC Modulator Rate
	5:4	DSDM[1:0]	RW	10h	DAC Modulator Rate
	3:2	RSVD	R	0h	Reserved for future use.
	1	dc_bypass	RW	0	1 = bypass DC removal filter **(WARNING DC content can damage speakers)**
	0	RSVD	R	0	Reserved

Table 5. CONFIG0 Register

3.2. Volume Control

The signal volume can be controlled digitally, across a gain and attenuation range of -95.25dB to 0dB (0.375dB steps). The level of attenuation is specified by an eight-bit code, ‘DACVOL_x’, where ‘x’ is L, or R. The value “00000000” indicates mute; other values select the number of 0.375dB steps above -95.625dB for the volume level.

The Volume Update bits control the updating of volume control data; when a bit is written as ‘0’, the Left Volume control associated with that bit is updated whenever the left volume register is written and the Right Volume control is updated when ever the right volume register is written. When a bit is written as ‘1’, the left volume data is placed into an internal holding register when the left volume register is written and both the left and right volumes are updated when the right volume register is written. This enables a simultaneous left and right volume update

Register Address	Bit	Label	Type	Default	Description
R10 (0Ah) VUCTL	7	ADCFade	RW	1	1 = volume fades between old/new value 0 = volume/mute changes immediately
	6	DACFade	RW	1	1 = volume fades between old/new value 0 = volume/mute changes immediately
	5	RSVD	R	0	Reserved for future use.
	4	INVOLU	RW	0	0 = Left input volume updated immediately 1 = Left input volume held until right input volume register written.
	3	ADCVOLU	RW	0	0 = Left ADC volume updated immediately 1 = Left ADC volume held until right ADC volume register written.
	2	DACVOLU	RW	0	0 = Left DAC volume updated immediately 1 = Left DAC volume held until right DAC volume register written.
	1	SPKVOLU	RW	0	0 = Left speaker volume updated immediately 1 = Left speaker volume held until right speaker volume register written.
	0	HPVOLU	RW	0	0 = Left headphone volume updated immediately 1 = Left headphone volume held until right headphone volume register written.

Table 6. Volume Update Control Register

The output path may be muted automatically when a long string of zero data is received. The length of zeros is programmable and a detection flag indicates when a stream of zero data has been detected.

©2011 INTEGRATED DEVICE TECHNOLOGY, INC.

Register Address	Bit	Label	Type	Default	Description
R33 (21h) Gain Control (GAINCTL)	7	zerodet_flag	R	0	1 = zero detect length exceeded.
	6	RSVD	R	0	Reserved for future use.
	5:4	zerodetlen	RW	2	Enable mute if input consecutive zeros exceeds this length. 0 = 512, 1 = 1k, 2 = 2k, 3 = 4k samples
	3	RSVD	R	0	Reserved for future use.
	2	auto_mute	RW	1	1 = auto mute if detect long string of zeros on input
	1	RSVD	R	0	Reserved for future use.
	0	RSVD	R	0	Reserved for future use.
	7	zerodet_flag	R	0	1 = zero detect length exceeded.

Table 7. Gain Control Register

3.3. Digital DAC Volume Control

The signal volume can be controlled digitally, across a gain and attenuation range of -95.25dB to 0dB (0.375dB steps). The level of attenuation is specified by an eight-bit code, ‘DACVOL_x’, where ‘x’ is L, or R. The value “00000000” indicates mute; other values select the number of 0.375dB steps above -95.625dB for the volume level.

Register Address	Bit	Label	Type	Default	Description
R4 (04h) Left DAC Volume Control	7:0	DACVOL_L [7:0]	RW	FF (0dB)	Left DAC Volume Level 0000 0000 = Digital Mute 0000 0001 = -95.25dB 0000 0010 = -94.875dB ... 0.375dB steps up to 1111 1111 = 0dB Note: If DACVOLU is set, this setting will take effect after the next write to the Right Input Volume register.
R5 (05h) Right DAC Volume Control	7:0	DACVOL_R [7:0]	RW	FF (0dB)	Right DAC Digital Volume Level 0000 0000 = Digital Mute 0000 0001 = -95.25dB 0000 0010 = -94.875dB ... 0.375dB steps up to 1111 1111 = 0dB

Table 8. DAC Volume Control Registers

3.4. Parametric Equalizer

The ACS422x00 has a dual 6-band digital parametric equalizer to enable fine tuning of the audio response and preferences for a given system. Each EQ may be enabled or disabled independently. Typically one EQ will be used for speaker compensation and disabled when only headphones are in use while the other EQ is used to alter the audio to make it more pleasing to the listener. This function operates on the digital audio data before it is converted back to analog by the audio DACs.

In all, 186 bytes of memory are required to store the parameters for each equalizer: each filter requires 5, 24-bit coefficients. There are 6 filters per channel, requiring a total of 180 bytes of EQ coefficient RAM. Two additional 24-bit values per channel store the prescale value, resulting in 372 bytes total, described later. Rather than having all 372 bytes be in the I2C address space of the device, access to the EQ ram occurs through the Control/Status registers.

©2011 INTEGRATED DEVICE TECHNOLOGY, INC.

3.4.1. Prescaler & Equalizer Filter

The Equalizer Filter consists of a Prescaler and 6 cascaded 6-tap IIR Filters. The Prescaler allows the input to be attenuated prior to the EQ filters in case the EQ filters introduce gain, and would thus clip if not prescaled.

IDT provides a tool to enable an audio designer to determine appropriate coefficients for the equalizer filters. The filters enable the implementation of a 6-band parametric equalizer with selectable frequency bands, gain, and filter characteristics (high, low, or bandpass).

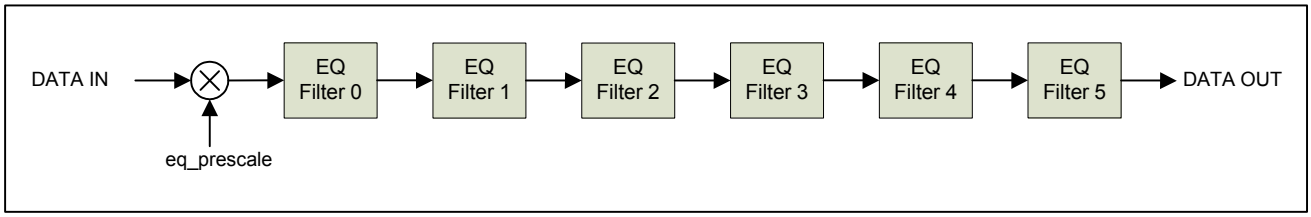

Figure 3. Prescaler & EQ Filters

The figure below shows the structure of a single EQ filter. The a(0) tap is always normalized to be equal to 1 (400000h). The remaining 5 taps are 24-bit twos compliment format programmable coefficients. ($-2 \leq$ coefficient $< +2$).

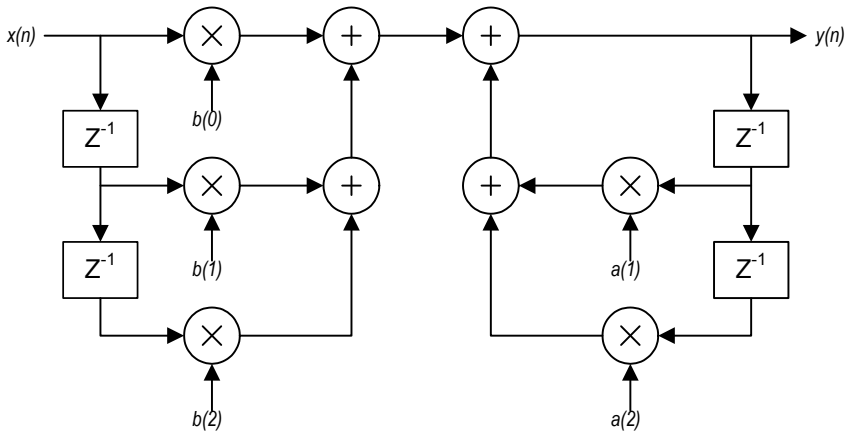

Figure 4. 6-Tap IIR Equalizer Filter

©2011 INTEGRATED DEVICE TECHNOLOGY, INC.

3.4.2. EQ Registers

- **EQ Filter Enable Register**

Register Address	Bit	Label	Type	Default	Description
R32 (20h) CONFIG1	7	EQ2_EN	R/W	0	EQ bank 2 enable 0 = second EQ bypassed, 1 = second EQ enabled
	6:4	EQ2_BE[2:0]	R/W	0	EQ2 band enable. When the EQ is enabled the following EQ stages are executed. 0 - Prescale only 1 - Prescale and Filter Band 0 ... 6 - Prescale and Filter Bands 0 to 5 7 - RESERVED
	3	EQ1_EN	R/W	0	EQ bank 1 enable 0 = first EQ bypassed, 1 = first EQ enabled
	2:0	EQ1_BE[2:0]	R/W	0	EQ1 band enable. When the EQ is enabled the following EQ stages are executed. 0 - Prescale only 1 - Prescale and Filter Band 0 ... 6 - Prescale and Filter Bands 0 to 5 7 - RESERVED

Table 9. CONFIG1 Register

- **DACCRAM Read Data (0x3D–LO, 0x3E–MID, 0x3F–HI), DACCRAM Write Data (0x3A–LO, 0x3B–MID, 0x3C–HI) Registers**
  These two 24-bit registers provide the 24-bit data holding registers used when doing indirect writes/reads to the DAC Coefficient RAM.

Register Address	Bit	Label	Type	Default	Description
R58 (3Ah) DACCRAM_WRITE_LO	7:0	DACCRWD[7:0]	R/W	0	Low byte of a 24-bit data register, contains the values to be written to the DACCRAM. The address written will have been specified by the DACCRAM Address fields.
R59 (3Bh) DACCRAM_WRITE_MID	7:0	DACCRWD[15:8]	R/W	0	Middle byte of a 24-bit data register, contains the values to be written to the DACCRAM. The address written will have been specified by the DACCRAM Address fields.
R60 (3Ch) DACCRAM_WRITE_HI	7:0	DACCRWD[23:16]	R/W	0	High byte of a 24-bit data register, contains the values to be written to the DACCRAM. The address written will have been specified by the DACCRAM Address fields.
R61 (3Dh) DACCRAM_READ_LO	7:0	DACCRRD[7:0]	R	0	Low byte of a 24-bit data register, contains the contents of the most recent DACCRAM address read from the RAM. The address read will have been specified by the DACCRAM Address fields.
R62 (3Eh) DACCRAM_READ_MID	7:0	DACCRRD[15:8]	R	0	Middle byte of a 24-bit data register, contains the contents of the most recent DACCRAM address read from the RAM. The address read will have been specified by the DACCRAM Address fields.
R63 (3Fh) DACCRAM_READ_HI	7:0	DACCRRD[23:16]	R	0	High byte of a 24-bit data register, contains the contents of the most recent DACCRAM address read from the RAM. The address read will have been specified by the DACCRAM Address fields.

Table 10. DACCRAM Read/Write Registers

©2011 INTEGRATED DEVICE TECHNOLOGY, INC.

- **DACCRAM Address Register**
  This 7-bit register provides the address to the internal RAM when doing indirect writes/reads to the DAC Coefficient RAM.

Register Address	Bit	Label	Type	Default	Description
R64 (40h) DACCRADDR	7:0	DACCRADD	R/W	0	Contains the address (between 0 and 255) of the DACCRAM to be accessed by a read or write. This is not a byte address--it is the address of the 24-bit data item to be accessed from the DACCRAM.This address is automatically incremented after writing to DACCRAM_WRITE_HI or reading from DACCRAM_READ_HI (and the 24 bit data from the next RAM location is fetched.)

Table 11. DACCRAM Address Register

- **DACCRAM STATUS Register**
  This control register provides the write/read enable when doing indirect writes/reads to the DAC Coefficient RAM.

Register Address	Bit	Label	Type	Default	Description
R138 (8Ah) DACCRSTAT	7	DACCRAM_Busy	R	0	1 = read/write to DACCRAM in progress, cleared by HW when done.
	6:0	RSVD	R	0	Reserved

Table 12. DACCRAM Status Register

3.4.3. Equalizer, Bass, Treble Coefficient & Equalizer Prescaler RAM

The DAC Coefficient RAM is a single port 161x24 synchronous RAM. It is programmed indirectly through the Control Bus in the following manner:

1. Write target address to DACCRAM_ADDR register.
2. Write D7:0 to the DACCRAM_WRITE_LO register
3. Write D15:8 to the DACCRAM_WRITE_MID register
4. Write D23:16 to the DACCRAM_WRITE_HI register
5. On successful receipt of the DACCRAM_WRITE_HI data, the part will automatically start a write cycle. The DACCRAM_Busy bit will be set high to indicate that a write is in progress.
6. On completion of the internal write cycle, the DACCRAM_Busy bit will be 0 (when operating the control interface at high speeds - TBD - software must poll this bit to ensure the write cycle is complete before starting another write cycle.)
7. The bus cycle may be terminated by the host or steps 2-6 may be repeated for writes to consecutive EQ RAM locations.

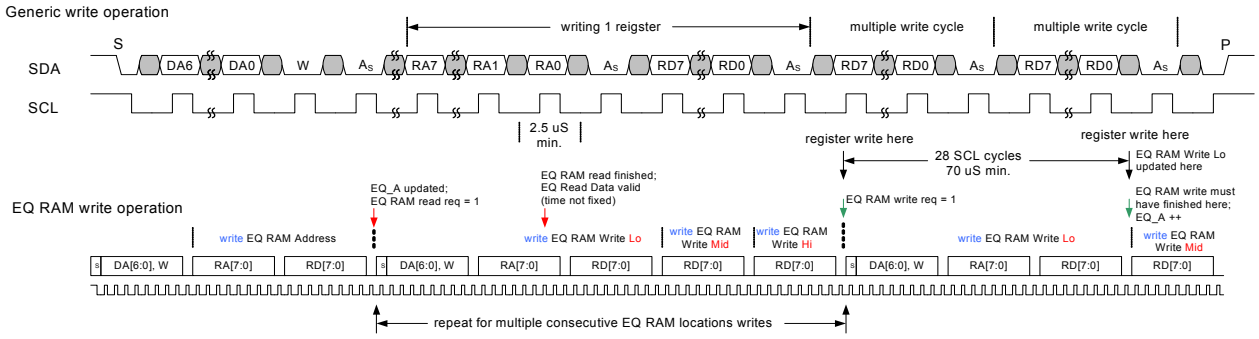

Figure 5. DAC Coefficient RAM Write Sequence

©2011 INTEGRATED DEVICE TECHNOLOGY, INC.

Reading back a value from the DACCRAM is done in this manner:

1. Write target address to DACCRAM_ADDR register.(EQ data is pre-fetched for read even if we don't use it)
2. Start (or repeat start) a write cycle to DACCRAM_READ_LO and after the second byte (register address) is acknowledged, go to step 3. (Do not complete the write cycle.)
3. Signal a repeat start and indicate a read operation
4. Read D7:0 (register address incremented after ack by host)
5. Read D15:8 (register address incremented after ack by host)
6. Read D23:16 (register address incremented and next EQ location pre-fetched after ack by host)
7. The host stops the bus cycle

To repeat a read cycle for consecutive EQ RAM locations:

1. Start (or repeat start instead of stopping the bus cycle in step 7) a write cycle indicating DACCRAM_RD_LO as the target address.
2. After the second byte is acknowledged, signal a repeated start.
3. Indicate a read operation
4. Read the DACCRAM_READ_LO register as described in step 4
5. Read the DACCRAM_READ_MID register as described in step 5
6. Read the DACCRAM_READ_HI register as described in step 6
7. Repeat steps 8-13 as desired

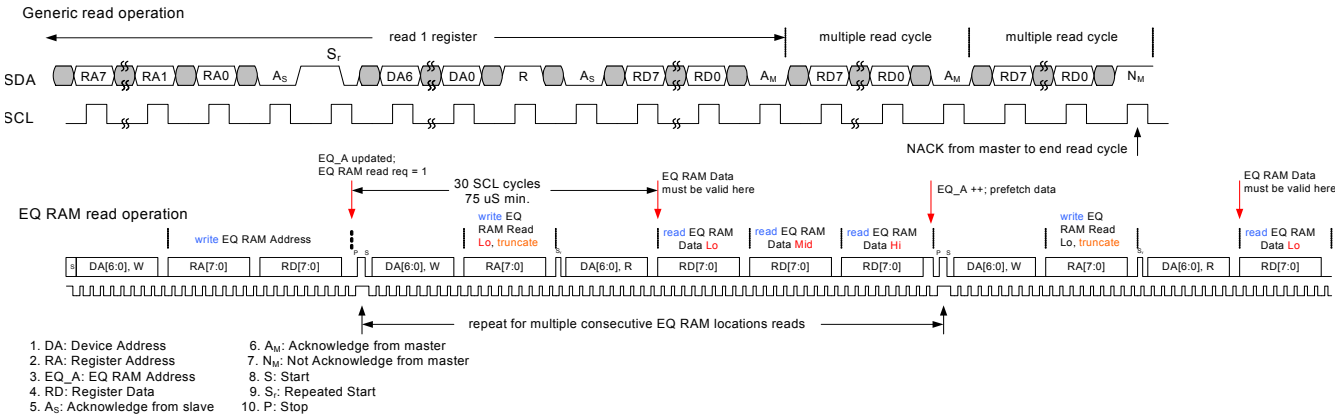

Figure 6. DAC Coefficient RAM Read Sequence

- **DACCRAM EQ Addresess**

EQ 0					EQ1				
Addr	**Channel 0 Coefficients**		**Addr**	**Channel 1 Coefficients**	**Addr**	**Channel 0 Coefficients**		**Addr**	**Channel 1 Coefficients**
0x00	EQ_COEF_0F0_B0		0x20	EQ_COEF_1F0_B0	0x40	EQ_COEF_2F0_B0		0x60	EQ_COEF_3F0_B0
0x01	EQ_COEF_0F0_B1		0x21	EQ_COEF_1F0_B1	0x41	EQ_COEF_2F0_B1		0x61	EQ_COEF_3F0_B1
0x02	EQ_COEF_0F0_B2		0x22	EQ_COEF_1F0_B2	0x42	EQ_COEF_2F0_B2		0x62	EQ_COEF_3F0_B2

©2011 INTEGRATED DEVICE TECHNOLOGY, INC.

EQ 0				EQ1			
Addr	**Channel 0 Coefficients**	**Addr**	**Channel 1 Coefficients**	**Addr**	**Channel 0 Coefficients**	**Addr**	**Channel 1 Coefficients**
0x03	EQ_COEF_0F0_A1	0x23	EQ_COEF_1F0_A1	0x43	EQ_COEF_2F0_A1	0x63	EQ_COEF_3F0_A1
0x04	EQ_COEF_0F0_A2	0x24	EQ_COEF_1F0_A2	0x44	EQ_COEF_2F0_A2	0x64	EQ_COEF_3F0_A2
0x05	EQ_COEF_0F1_B0	0x25	EQ_COEF_1F1_B0	0x45	EQ_COEF_2F1_B0	0x65	EQ_COEF_3F1_B0
0x06	EQ_COEF_0F1_B1	0x26	EQ_COEF_1F1_B1	0x46	EQ_COEF_2F1_B1	0x66	EQ_COEF_3F1_B1
0x07	EQ_COEF_0F1_B2	0x27	EQ_COEF_1F1_B2	0x47	EQ_COEF_2F1_B2	0x67	EQ_COEF_3F1_B2
0x08	EQ_COEF_0F1_A1	0x28	EQ_COEF_1F1_A1	0x48	EQ_COEF_2F1_A1	0x68	EQ_COEF_3F1_A1
0x09	EQ_COEF_0F1_A2	0x29	EQ_COEF_1F1_A2	0x49	EQ_COEF_2F1_A2	0x69	EQ_COEF_3F1_A2
0x0A	EQ_COEF_0F2_B0	0x2A	EQ_COEF_1F2_B0	0x4A	EQ_COEF_2F2_B0	0x6A	EQ_COEF_3F2_B0
0x0B	EQ_COEF_0F2_B1	0x2B	EQ_COEF_1F2_B1	0x4B	EQ_COEF_2F2_B1	0x6B	EQ_COEF_3F2_B1
0x0C	EQ_COEF_0F2_B2	0x2C	EQ_COEF_1F2_B2	0x4C	EQ_COEF_2F2_B2	0x6C	EQ_COEF_3F2_B2
0x0D	EQ_COEF_0F2_A1	0x2D	EQ_COEF_1F2_A1	0x4D	EQ_COEF_2F2_A1	0x6D	EQ_COEF_3F2_A1
0x0E	EQ_COEF_0F2_A2	0x2E	EQ_COEF_1F2_A2	0x4E	EQ_COEF_2F2_A2	0x6E	EQ_COEF_3F2_A2
0x0F	EQ_COEF_0F3_B0	0x2F	EQ_COEF_1F3_B0	0x4F	EQ_COEF_2F3_B0	0x6F	EQ_COEF_3F3_B0
0x10	EQ_COEF_0F3_B1	0x30	EQ_COEF_1F3_B1	0x50	EQ_COEF_2F3_B1	0x70	EQ_COEF_3F3_B1
0x11	EQ_COEF_0F3_B2	0x31	EQ_COEF_1F3_B2	0x51	EQ_COEF_2F3_B2	0x71	EQ_COEF_3F3_B2
0x12	EQ_COEF_0F3_A1	0x32	EQ_COEF_1F3_A1	0x52	EQ_COEF_2F3_A1	0x72	EQ_COEF_3F3_A1
0x13	EQ_COEF_0F3_A2	0x33	EQ_COEF_1F3_A2	0x53	EQ_COEF_2F3_A2	0x73	EQ_COEF_3F3_A2
0x14	EQ_COEF_0F4_B0	0x34	EQ_COEF_1F4_B0	0x54	EQ_COEF_2F4_B0	0x74	EQ_COEF_3F4_B0
0x15	EQ_COEF_0F4_B1	0x35	EQ_COEF_1F4_B1	0x55	EQ_COEF_2F4_B1	0x75	EQ_COEF_3F4_B1
0x16	EQ_COEF_0F4_B2	0x36	EQ_COEF_1F4_B2	0x56	EQ_COEF_2F4_B2	0x76	EQ_COEF_3F4_B2
0x17	EQ_COEF_0F4_A1	0x37	EQ_COEF_1F4_A1	0x57	EQ_COEF_2F4_A1	0x77	EQ_COEF_3F4_A1
0x18	EQ_COEF_0F4_A2	0x38	EQ_COEF_1F4_A2	0x58	EQ_COEF_2F4_A2	0x78	EQ_COEF_3F4_A2
0x19	EQ_COEF_0F5_B0	0x39	EQ_COEF_1F5_B0	0x59	EQ_COEF_2F5_B0	0x79	EQ_COEF_3F5_B0
0x1A	EQ_COEF_0F5_B1	0x3A	EQ_COEF_1F5_B1	0x5A	EQ_COEF_2F5_B1	0x7A	EQ_COEF_3F5_B1
0x1B	EQ_COEF_0F5_B2	0x3B	EQ_COEF_1F5_B2	0x5B	EQ_COEF_2F5_B2	0x7B	EQ_COEF_3F5_B2
0x1C	EQ_COEF_0F5_A1	0x3C	EQ_COEF_1F5_A1	0x5C	EQ_COEF_2F5_A1	0x7C	EQ_COEF_3F5_A1
0x1D	EQ_COEF_0F5_A2	0x3D	EQ_COEF_1F5_A2	0x5D	EQ_COEF_2F5_A2	0x7D	EQ_COEF_3F5_A2
0x1E	-	0x3E	-	0x5E	-	0x7E	-
0x1F	EQ_PRESCALE0	0x3F	EQ_PRESCALE1	0x5F	EQ_PRESCALE2	0x7F	EQ_PRESCALE3

Table 13. DACCRAM EQ Addresses

©2011 INTEGRATED DEVICE TECHNOLOGY, INC.

- **DACCRAM Bass/Treble Addresses**

Addr	Bass Coefficients[1]	Addr	Treble Coefficients	Addr	3D Coefficients
0x80	BASS_COEF_EXT1_B0	0x97	TREB_COEF_EXT1_B0	0xAE	3D_COEF
0x81	BASS_COEF_EXT1_B1	0x98	TREB_COEF_EXT1_B1	0xAF	3D_MIX
0x82	BASS_COEF_EXT1_B2	0x99	TREB_COEF_EXT1_B2		
0x83	BASS_COEF_EXT1_A1	0x9A	TREB_COEF_EXT1_A1		
0x84	BASS_COEF_EXT1_A2	0x9B	TREB_COEF_EXT1_A2		
0x85	BASS_COEF_EXT2_B0	0x9C	TREB_COEF_EXT2_B0		
0x86	BASS_COEF_EXT2_B1	0x9D	TREB_COEF_EXT2_B1		
0x87	BASS_COEF_EXT2_B2	0x9E	TREB_COEF_EXT2_B2		
0x88	BASS_COEF_EXT2_A1	0x9F	TREB_COEF_EXT2_A1		
0x89	BASS_COEF_EXT2_A2	0xA0	TREB_COEF_EXT2_A2		
0x8A	BASS_COEF_NLF_M1[2]	0xA1	TREB_COEF_NLF_M1		
0x8B	BASS_COEF_NLF_M2	0xA2	TREB_COEF_NLF_M2		
0x8C	BASS_COEF_LMT_B0	0xA3	TREB_COEF_LMT_B0		
0x8D	BASS_COEF_LMT_B1	0xA4	TREB_COEF_LMT_B1		
0x8E	BASS_COEF_LMT_B2	0xA5	TREB_COEF_LMT_B2		
0x8F	BASS_COEF_LMT_A1	0xA6	TREB_COEF_LMT_A1		
0x90	BASS_COEF_LMT_A2	0xA7	TREB_COEF_LMT_A2		
0x91	BASS_COEF_CTO_B0	0xA8	TREB_COEF_CTO_B0		
0x92	BASS_COEF_CTO_B1	0xA9	TREB_COEF_CTO_B1		
0x93	BASS_COEF_CTO_B2	0xAA	TREB_COEF_CTO_B2		
0x94	BASS_COEF_CTO_A1	0xAB	TREB_COEF_CTO_A1		
0x95	BASS_COEF_CTO_A2	0xAC	TREB_COEF_CTO_A2		
0x96	BASS_MIX	0xAD	TREB_MIX		

Table 14. DACCRAM Bass/Treble Addresses

1. All B0 coefficients are set to unity (400000h) by default. All others, including M1 and M2, are 0 by default.
2. NLF coefficients (M1, M2) have a range defined as +/-8, with 1 sign bit, 3 integer bits, and 20 fraction bits. So, unity for these values is 100000h. This is as opposed to the rest of the coefficient RAM, which has a range defined as +/-2, with 1 sign bit, 1 integer bit, and 22 fraction bits.

3.5. Gain and Dynamic Range Control

The gain for a given channel is controlled by the DACVOL registers. The range of gain supported is from -95.625db to 0db in 0.375db steps.

If the result of the gain multiply step would result in overflow of the 24-bit output word width, the output is saturated at the max positive or negative value.

In addition to simple gain control, the ACS422x00 also provides sophisticated dynamic range control. The dynamic

©2011 INTEGRATED DEVICE TECHNOLOGY, INC.

range control processing element implements limiting, dynamic range compression, and dynamic range expansion functions.

3.6. Limiter

The Limiter function will limit the output of the DSP module to the Class-D and DAC modules. If the signal is greater than 0dB it will saturate at 0dB as the final processing step within the DSP module.

There are times when the user may intentionally want the output Limiter to perform this saturation, for example +6dB of gain applied within the DSP gain control and then limited to 0dB when output to the Class-D module would result in a clipped signal driving the speaker output. This clipped signal would obviously contribute to increased distortion on the speaker output which from the user listening perception it would “sound louder”.

At other times, the system implementor may wish to protect speakers from overheating or provide hearing protection by intentionally limiting the output level before full scale is reached. A limit threshold, independent of the compressor threshold is provided for this purpose. It is expected that the limit threshold is set to a higher level than the compressor threshold.

3.7. Compressor

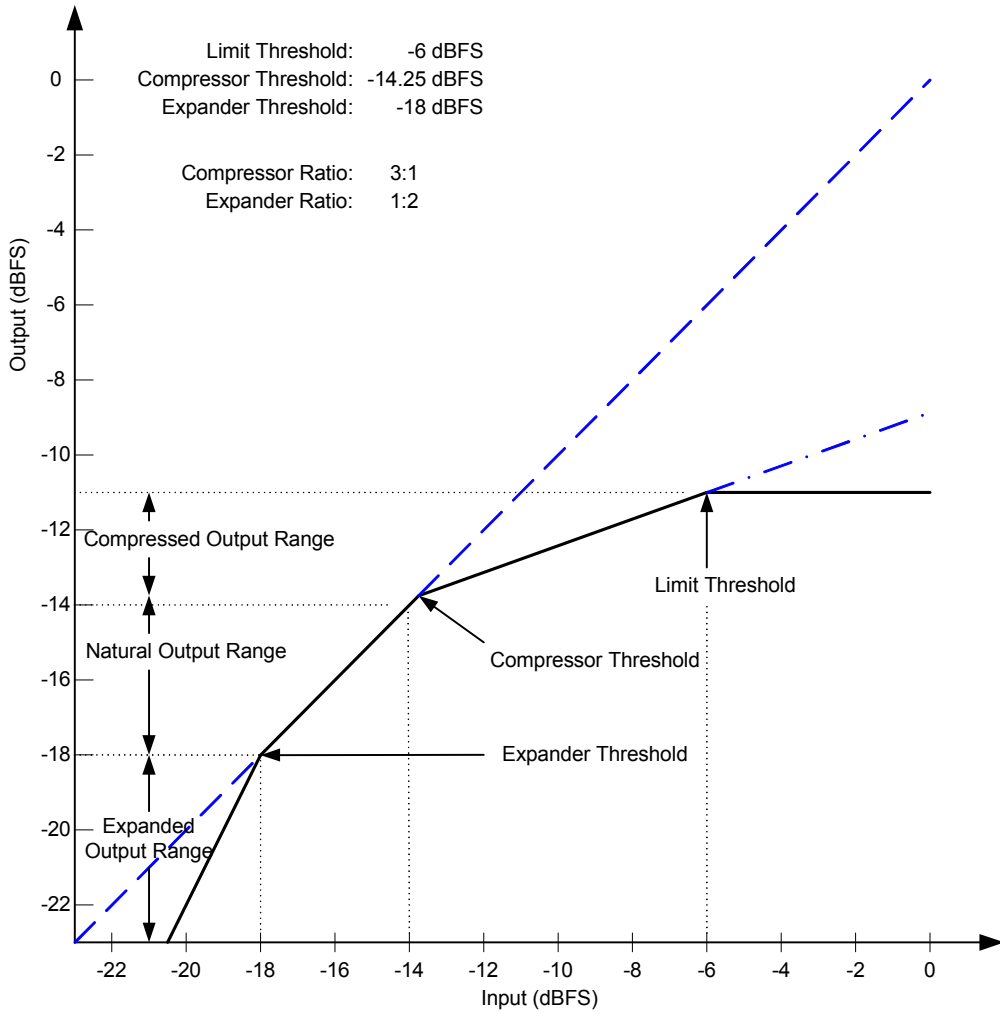

Figure 7. Gain Compressor, Output vs Input

The traditional compressor algorithm provides two functions simultaneously (depending on signal level). For higher

©2011 INTEGRATED DEVICE TECHNOLOGY, INC.

level signals, it can provide a compression function to reduce the signal level. For lower level signals, it can provide an expansion function for either increasing dynamic range or noise gating.

The compressor monitors the signal level and, if the signal is higher than a threshold, will reduce the gain by a programmed ratio to restrict the dynamic range. Limiting is an extreme example of the compressor where, as the input signal level is increased, the gain is decreased to maintain a specific output level.

In addition to limiting the bandwidth of the compressed audio, it is common for compressed audio to also compress the dynamic range of the audio. The expansion function in the ACS422x00 can help restore the original dynamics to the audio.

The expander is a close relative of the compressor. Rather than using signal dependent gain to restrict the dynamic range, the expander uses signal dependent gain to expand the dynamic range. Thus if a signal level is below a particular threshold, the expander will reduce the gain even further to extend the dynamic range of the material.

3.7.1. Configuration

This compressor limiter provides the following configurable parameters.

- Compressor
  - Threshold – The threshold above which the compressor will reduce the dynamic range of the audio in the compression region.
  - Ratio – The ratio between the input dynamic range and the output dynamic range. For example, a ratio of 3 will reduce an input dynamic range of 9db to 3db.
  - Attack Time – The amount of time that changes in gain are smoothed over during the attack phase of the compressor.
  - Release Time – The amount of time that changes in gain are smoothed over during the release phase of the compressor.
  - Makeup gain – Used to increase the overall level of the compressed audio.
- Limiter
  - Threshold – The threshold above which the limiter will reduce the dynamic range of the audio in the compression region.
  - Target – The limit of the output level (typically set to the same as threshold).
  - Attack Time – The amount of time that changes in gain are smoothed over during the attack phase of the limiter.
  - Release Time – The amount of time that changes in gain are smoothed over during the release phase of the limiter.
- Expander
  - Threshold – The threshold below which the expander will increase the dynamic range of the audio.
  - Ratio – The ratio between the input dynamic range and the output dynamic range of the audio in the expansion range. For example a ratio of 3 will take an input dynamic range of 9db and expand it to 27db.
  - Attack Time – The amount of time that changes in gain are smoothed over during the attack phase of the expander
  - Release Time - The amount of time that changes in gain are smoothed over during the release phase of the expander.
- Two level detection algorithms
  - RMS – Use an RMS measurement for the level.
  - Peak – Use a peak measurement for the level.

©2011 INTEGRATED DEVICE TECHNOLOGY, INC.

3.7.2. Controlling parameters

In order to control this processing, there are a number of configurable parameters. The parameters and their ranges are:

- Compressor/limiter
  - Threshold – -40db to 0db relative to full scale.
  - Ratio – 1 to 20
  - Attack Time – typically 0 to 500ms
  - Release Time – typically 25ms to 2 seconds
  - Makeup gain – 0 to 40db

- Expander
  - Threshold – -30 to -60 dB
  - Ratio – 1 to 6
  - Attack Time – same as above
  - Release Time – same as above.
- Two level detection algorithms
  - RMS
  - Peak

3.7.3. Overview

A basic block diagram of the compressor is shown below:

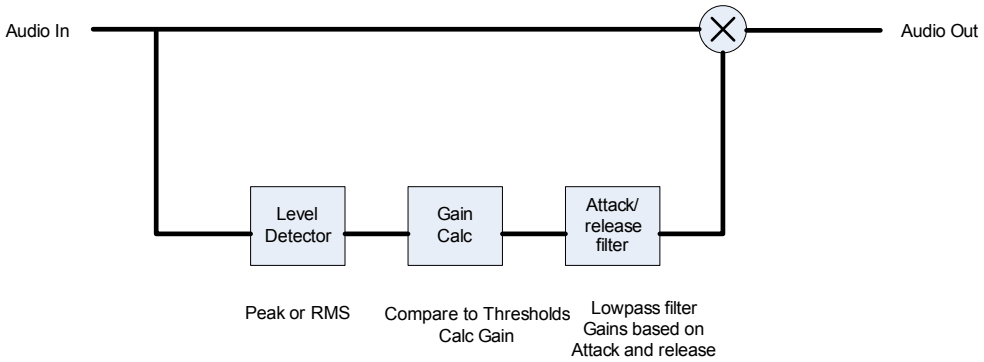

Figure 8. Compressor block diagram

As this diagram shows, there are 3 primary components of the compressor.

1. **Level Detector:** The level detector, oddly enough, detects the level of the incoming signal. Since the comp/limiter is designed to work on blocks of signals, the level detector will either find the peak value of the block of samples to be processed or the rms level of the samples within a block.
2. **Gain Calculation:** The gain calculation block is responsible for taking the output of the level detector and calculating a target gain based on that level and the compressor and expander

©2011 INTEGRATED DEVICE TECHNOLOGY, INC.

thresholds. The compressor recalculates the target gain value every block, typically every 10ms.

- The gain calculation operates in 3 regions:
  - Linear region – If the level is higher than the expander threshold and lower than the compression threshold, then the gain is 1.0
  - Compression region – When the level is higher than the compressor threshold, then the comp/limiter is in the compression region. The gain is a function of the compressor ratio and the signal level.
  - Expansion region – When the signal is lower than the expansion threshold, the comp/limiter is in the expansion region. In this region, the gain is a function of the signal level and the expansion ratio.
- Compression region gain calculation: In the compression region, the gain calculation is:

```
Atten(in db) = (1-1/ratio)(threshold(in db) - level(in db);
```

  - For example,
    - Ratio = 4:1 compression
    - Threshold = -16db
    - Level = -4 db

The required attenuation is: 9db or a gain coefficient of 0.1259.

Translating this calculation from log space to linear yields the formula:

$$\text{Gain} = (\text{level}/\text{threshold})^{1/\text{ratio}} * (\text{threshold}/\text{level})$$

- Expansion region gain calculation: In the expansion region, the attenuation calculation is:

```
Atten(in db) = (1 - ratio)(threshold-level);
```

  - For example,
    - Ratio = 3:1
    - Threshold = -40db
    - Level = -44 db

The resulting attenuation required is 8db or a gain value of 0.1585.

The linear equation for calculating the gain is:

$$\text{Gain} = (\text{level}/\text{threshold})^{\text{ratio}} * (\text{threshold}/\text{level})$$

- State Transitions: In addition to calculating the new gain for the compressor, the gain calculation block will also select the filter coefficient for the attack/release filter. The rules for selecting the coefficient are as follows:

©2011 INTEGRATED DEVICE TECHNOLOGY, INC.

In the compression region:

- If the gain calculated is less than the last gain calculated (more compression is being applied), then the filter coefficient is the compressor attack.
- If the gain calculated is more than the last gain calculated (less compression), the filter coefficient is the compressor release.
- In the expansion region:
- If the calculated gain is less than the last gain calculated (closing expander, the filter coefficient is the expander attack.
- If the calculated gain is more than the last gain calculated, the filter coefficient is the expander release.

In the linear region:

- Modify gain until a gain of 1.0 is obtained.
- If the last non-linear state was compression, use the compressor release.
- If the last non-linear state was expansion, use the expander attack.

3. **Attack/Release filter:** In order to prevent objectionable artifacts, the gain is smoothly ramped from the current value to the new value calculated by the gain calculation block. In the PC-based comp/limiter, this is achieved using a simple tracking lowpass filter to smooth out the abrupt transitions. The calculation (using the coefficient (coeff) selected by the gain block) is:

```
Filtered_gain = coeff*last_filtered_gain + (1.0 - coeff)*target_gain;
```

This creates a exponential ramp from the current gain value to the new value.

3.7.4. Limiter/Compressor Registers

- **General compressor/limiter/expander control**

Register Address	Bit	Label	Type	Default	Description
R37 (25h) CLECTL	7:5	RSVD	R	0h	Reserved
	4	Lvl_Mode	RW	0	CLE Level Detection Mode 0 = Average 1 = Peak
	3	WindowSel	RW	0	Window width selection for level detection: 0 = equivalent of 512 samples of selected Base Rate (~10-16ms) 1 = equivalent of 64 samples of selected Base Rate (~1.3-2ms)
	2	Exp_en	RW	0	1 = enable expander
	1	Limit_en	RW	0	1 = enable limiter
	0	Comp_en	RW	0	1 = enable compressor

Table 15. CLECTL Register

- **Compressor/Limiter/Expander make-up gain**

Register Address	Bit	Label	Type	Default	Description
R38 (26h) MUGAIN	7:5	RSVD	R	0h	Reserved
	4:0	CLEMUG[4:0]	RW	0h	0dB..46.5dB in 1.5dB steps

Table 16. MUGAIN Register

©2011 INTEGRATED DEVICE TECHNOLOGY, INC.

- **Compressor Threshold**

Register Address	Bit	Label	Type	Default	Description
R39 (27h) COMPTH	7:0	COMPTH[7:0]	RW	00h	FFh..00h = 0dB..95.625dB in 0.375dB steps.

Table 17. COMPTH Register

- **Compressor ratio register**

Register Address	Bit	Label	Type	Default	Description
R40 (28h) CMPRAT	7:5	RSVD	R	000	Reserved
	4:0	CMPRAT[4:0]	RW	00h	Compressor Ratio 00h = Reserved 01h = 1.5:1 02h..14h = 2:1..20:1 15h..1Fh = Reserved

Table 18. CMPRAT Register

- **Compressor Attack Time Constant Register (Low)**

Register Address	Bit	Label	Type	Default	Description
R41 (29h) CATKTCL	7:0	CATKTC[7:0]	RW	00h	Low byte of the time constant used to ramp to a new gain value during a compressor attack phase.

Table 19. CATKTCL Register

- **Compressor Attack Time Constant Register (High)**

Register Address	Bit	Label	Type	Default	Description
R42 (2Ah) CATKTCH	7:0	CATKTC[15:8]	RW	00h	High byte of the time constant used to ramp to a new gain value during a compressor attack phase.

Table 20. CATKTCH Register

- **Compressor Release Time Constant Register (Low)**

Register Address	Bit	Label	Type	Default	Description
R43 (2Bh) CRELTCL	7:0	CRELTC[7:0]	RW	00h	Low byte of the time constant used to ramp to a new gain value during a compressor release phase.

Table 21. CRELTCL Register

- **Compressor Release Time Constant Register (High)**

Register Address	Bit	Label	Type	Default	Description
R44 (2Ch) CRELTCH	7:0	CRELTC[15:8]	RW	00h	High byte of the time constant used to ramp to a new gain value during a compressor release phase.

Table 22. CRELTCH Register

- **Limiter Threshold Register**

Register Address	Bit	Label	Type	Default	Description
R45 (2Dh) LIMTH	7:0	LIMTH[7:0]	RW	00h	FFh..00h = 0dB..95.625dB in 0.375dB steps.

Table 23. LIMTH Register

©2011 INTEGRATED DEVICE TECHNOLOGY, INC.

- **Limiter Target Register**

Register Address	Bit	Label	Type	Default	Description
R46 (2Eh) LIMTGT	7:0	LIMTGT[7:0]	RW	00h	FFh..00h = 0dB..95.625dB in 0.375dB steps.

Table 24. LIMTGT Register

- **Limiter Attack Time Constant Register (Low)**

Register Address	Bit	Label	Type	Default	Description
R47 (2Fh) LATKTCL	7:0	LATKTC[7:0]	RW	00h	Low byte of the time constant used to ramp to a new gain value during a limiter attack phase.

Table 25. LATKTCL Register

- **Limiter Attack Time Constant Register (High)**

Register Address	Bit	Label	Type	Default	Description
R48 (30h) LATKTCH	7:0	LATKTC[15:8]	RW	00h	High byte of the time constant used to ramp to a new gain value during a limiter attack phase.

Table 26. LATKTCH Register

- **Limiter Release Time Constant Register (Low)**

Register Address	Bit	Label	Type	Default	Description
R49 (31h) LRELTCL	7:0	LRELTC[7:0]	RW	00h	Low byte of the time constant used to ramp to a new gain value during a limiter release phase.

Table 27. LRELTCL Register

- **Limiter Release Time Constant Register (High)**

Register Address	Bit	Label	Type	Default	Description
R50 (32h) LRELTCH	7:0	LRELTC[15:8]	RW	00h	High byte of the time constant used to ramp to a new gain value during a limiter release phase.

Table 28. LRELTCH Register

3.7.5. Expander Registers

- **Expander Threshold Register**

Register Address	Bit	Label	Type	Default	Description
R51 (33h) EXPTH	7:0	EXPTH[7:0]	RW	00h	Expander threshold: 0..95.625dB in 0.375dB steps

Table 29. EXPTH Register

- **Expander Ratio Register**

Register Address	Bit	Label	Type	Default	Description
R52 (34h) EXPRAT	7:3	RSVD	R	00h	Reserved
		EXPRAT[2:0]	RW	000	Expander Ratio 0h..1h = Reserved 2h..7h = 1:2..1:7

Table 30. EXPRAT Register

©2011 INTEGRATED DEVICE TECHNOLOGY, INC.

- **Expander Attack Time Constant Register (Low)**

Register Address	Bit	Label	Type	Default	Description
R53 (35h) XATKTCL	7:0	XATKTC[7:0]	RW	00h	Low byte of the time constant used to ramp to a new gain value during a expander attack phase.

Table 31. XATKTCL Register

- **Expander Attack Time Constant Register (High)**

Register Address	Bit	Label	Type	Default	Description
R54 (36h) XATKTCH	7:0	XATKTC[15:8]	RW	00h	High byte of the time constant used to ramp to a new gain value during a expander attack phase.

Table 32. XATKTCH Register

- **Expander Release Time Constant Register (Low)**

Register Address	Bit	Label	Type	Default	Description
R55 (37h) XRELTCL	7:0	XRELTC[7:0]	RW	0	Low byte of the time constant used to ramp to a new gain value during a expander release phase.

Table 33. XRELTCL Register

- **Expander Release Time Constant Register (High)**

Register Address	Bit	Label	Type	Default	Description
R56 (38h) XRELTCH	7:0	XRELTC[15:8]	RW	0	High byte of the time constant used to ramp to a new gain value during a expander release phase.

Table 34. XRELTCH Register

3.8. Output Effects

The ACS422x00 offers Bass enhancement, Treble enhancement, Stereo Depth enhancement. The output effects processing is outlined in the following sections.l

Register Address	Bit	Label	Type	Default	Description
R57 (39h) FXCTL	7:5	RSVD	R	000	Reserved
	4	3DEN	RW	0	3D Enhancement Enable 0 = Disabled 1 = Enabled
	3	TEEN	RW	0	Treble Enhancement Enable 0 = Disabled 1 = Enabled
	2	TNLFBYP	RW	0	Treble Non-linear Function Bypass: 0 = Enabled 1 = Bypassed
	1	BEEN	RW	0	Bass Enhancement Enable 0 = Disabled 1 = Enabled
	0	BNLFBYP	RW	0	Bass Non-linear Function Bypass: 0 = Enabled 1 = Bypassed

Table 35. FX Control Register

3.9. Stereo Depth (3-D) Enhancement

The ACS422x00 has a digital depth enhancement option to artificially increase the separation between the left and right channels, by enabling the attenuation of the content common to both channels. The amount of attenuation is programmable within a range. The input is prescaled (fixed) before summation to prevent saturation.

The 3-D enhancement algorithm is a tried and true algorithm that uses two principles.

©2011 INTEGRATED DEVICE TECHNOLOGY, INC.

1. If the material common to the two channels is removed, then the speakers will sound more 3-D.
2. If the material for the opposite channel is presented to the current channel inverted, it will tend to cancel any material from the opposite channel on the current ear. For example, if the material from the right is presented to the left ear inverted, it will cancel some of the material from the right ear that is leaking into the right ear.

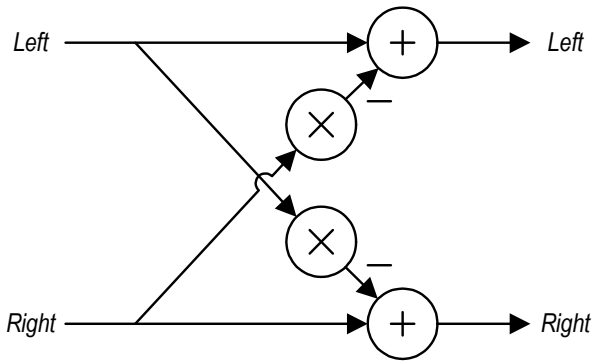

Figure 9. 3-D Channel Inversion

Note: 3D_Mix specifies the amount of the common signal that is subtracted from the left and right channels. This number is a fractional amount between 0 and 1. For proper operation, this value is typically negative.

3.10. Psychoacoustic Bass Enhancement

One of the primary audio quality issues with small speaker systems is their inability to reproduce significant amounts of energy in the bass region (below 200Hz). While there is no magic mechanism to make a speaker reproduce frequencies that it is not capable of, there are mechanisms for fooling the ear into thinking that the bass material is being heard.

The psychoacoustic bass processor relies on a psychoacoustic principle called “missing fundamental”. If the human ear hears a proper series of harmonics for a particular bass note, the listener will hear the fundamental of that series, even if it is not present.

A processing algorithm using this principle allows for improving the apparent low frequency response of an audio system below what it is actually capable of. Below is a diagram of the implementation of this algorithm.

.

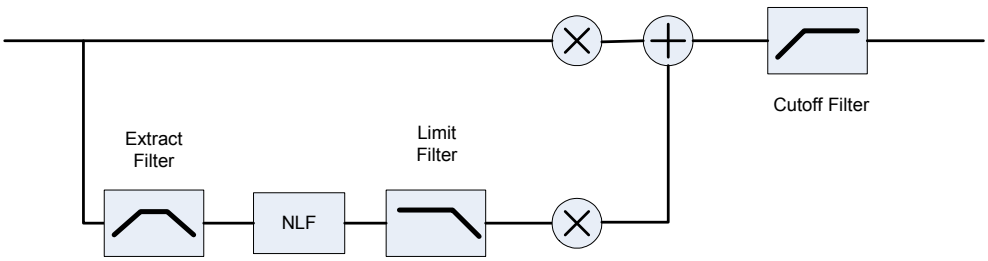

Figure 10. Bass Enhancement

This implementation is composed of 5 major components:

©2011 INTEGRATED DEVICE TECHNOLOGY, INC.

1. **Extract filter** – This filter extracts the bass information that the speaker system can't reproduce. This is a 4th order band pass filter with a typical bandwidth of 1.5 to 2 octaves.
2. **NLF** – This is a Nonlinear function that is used to generate the harmonics of the fundamentals in the extracted audio. More on this function later.
3. **Limit Filter** – This filter will limit the amplitude of the harmonics generated to prevent the harmonics from creating noise in the midrange. Too many harmonics will spill into the mid range and be heard as unwanted buzzing. Too few and the psychoacoustic effect is not reached. The exact composition of this filter is still or be determined. A 2nd order filter is currently sufficient for the NLF function employed.
4. **Mixing** – This structure allows mixing of the generated harmonics and the original material.
5. **Cutoff Filter** – This filter is used to remove all material below the cutoff frequency of the speaker systems. This includes the fundamentals used to create the psychoacoustic effect, since they can't be reproduced. This is a 2nd order high pass filter.

3.11. Treble Enhancement

One of the mechanisms used to limit the bit rate for compressed audio is to first remove high frequency information before compression. When these files are decompressed, this can lead to dull sounding audio. The IDT treble enhancement replaces these lost high frequencies.

The enhanced treble function works much like the enhanced bass, however it's intended use is different. The enhanced treble uses a non linear function to add treble harmonics to a signal that has limited high-frequency bandwidth (such as a low bit rate MP3). In this case, the algorithm makes use of the audio fact that presence of audio between 4-8K is a good predictor of audio between 10K-20K.

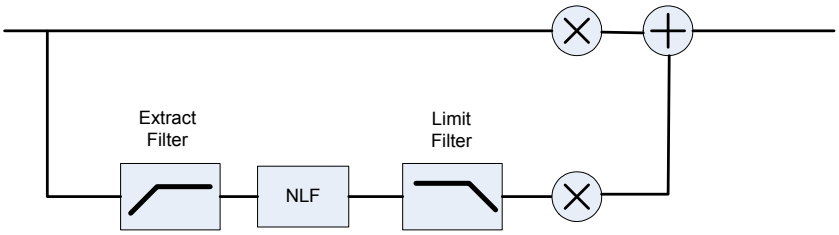

Figure 11. Treble Enhancement

This implementation extracts the high frequency content that is available in the audio, generates harmonics of those frequencies. These harmonics are then summed back into the original signal, providing a brighter sound.

This algorithm has 4 components.

- **Extract Filter**– This filter is used to extract the treble between 4-8K. This is 2 2nd order high pass filters.
- **Enhanced Treble Non-Linear Function**– Generates high frequency components
- **Limit Filter**– This filter limits the harmonics generated by the NLF to prevent any significant aliasing. A second order filter is sufficient.
- **Mixing Network** – This simply sums the generated harmonic signals into the original signal.

©2011 INTEGRATED DEVICE TECHNOLOGY, INC.

3.12. Mute and De-Emphasis

The ACS422x00 has a Soft Mute function, which is used to gradually attenuate the digital signal volume to zero. The gain returns to its previous setting if the soft mute is removed. At startup, the codec is muted by default; to enable audio play, the mute bit must be cleared to 0.

After the equalization filters, de-emphasis may be performed on the audio data to compensate for pre-emphasis that may be included in the audio stream. De-emphasis filtering is only available for 48kHz, 44.1kHz, and 32kHz sample rates.

3.13. Mono Operation and Phase Inversion

Normal stereo operation converts left and right channel digital audio data to analog in separate DACs. However, it is also possible to have the same signal (left or right) appear on both analog output channels by disabling one channel; alternately, there is a mono-mix mode that mixes the two channels digitally before converting to analog using only one DAC. In this mode, the other DAC is switched off, and the resulting mixed stream signal can appear on both analog output channels. The DAC output defaults to non-inverted. Setting DACPOLL and DACPOLR bits will invert the DAC output phase on the left and right channels.

3.13.1. DAC Control Register

Register Address	Bit	Label	Type	Default	Description
R24 (18h) CNVRTR1	7	DACPOLR	RW	0	Invert DAC Right signal
	6	DACPOLL	RW	0	Invert DAC Left signal
	5:4	DMONOMIX [1:0]	RW	00	DAC mono mix 00: stereo 01: mono ((L/2)+(R/2)) into DACL, ‘0’ into DACR 10: mono ((L/2)+(R/2)) into DACR, ‘0’ into DACL 11: mono ((L/2)+(R/2)) into DACL and DACR
	3	DACMU	RW	1	Digital Soft Mute 1 = mute 0 = no mute (signal active)
	2	DEEMP	RW	0	De-emphasis Enable 1 = De-emphasis Enabled 0 = No De-emphasis
	1:0	RSVD	R	00	Reserved

Table 36. CNVRTR1 Register

©2011 INTEGRATED DEVICE TECHNOLOGY, INC.

3.13.2. Interpolation and Filtering

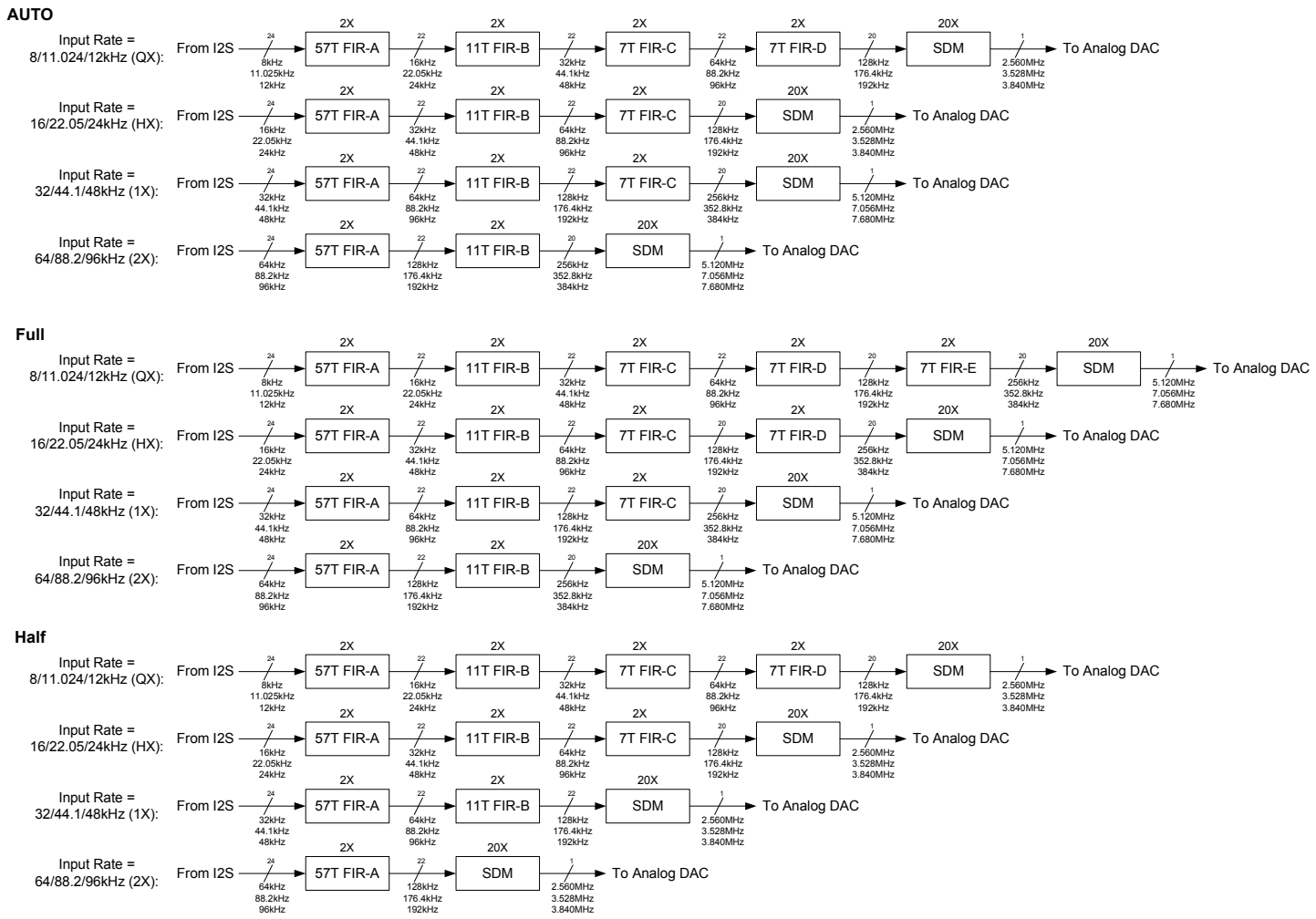

Figure 12. Interpolation and Filtering

©2011 INTEGRATED DEVICE TECHNOLOGY, INC.

3.14. Analog Outputs

3.14.1. Headphone Output

The HPOut pins can drive a 16Ω or 32Ω headphone or alternately drive a line output. The signal volume of the headphone amplifier can be independently adjusted under software control by writing to HPVOL_L and HPVOL_R. Setting the volume to 0000000 will mute the output driver; the output remains at ground, so that no click noise is produced when muting or un-muting.

Gains above 0dB run the risk of clipping large signals.

To minimize artifacts such as clicks and zipper noise, the headphone and BTL outputs feature a volume fade function that smoothly changes volume from the current value to the target value.

3.14.1.1. Headphone Volume Control Registers

Register Address	Bit	Label	Type	Default	Description
R2 (00h) HPVOLL	7	RSVD	R	0	Reserved
	6:0	HPVOL_L [6:0]	RW	1110111 (0dB)	Left Headphone Volume 1111111 = +6dB 1111110 = +5.25dB … 1110111 = 0dB ... 0000001 = -88.5dB 0000000 = Analog mute Note: If HPVOLU is set, this setting will take effect after the next write to the Right Input Volume register.
R3 (01h) HPVOLR	7	RSVD	R	0	Reserved
	6:0	HPVOL_R [6:0]	RW	1110111	Right Headphone Volume 1111111 = +6dB 1111110 = +5.25dB … 1110111 = 0dB ... 0000001 = -88.5dB 0000000 = Analog mute

Table 37. HPVOL L/R Registers

©2011 INTEGRATED DEVICE TECHNOLOGY, INC.

3.14.2. Speaker Outputs

The LSPKOut (L+, L-) and RSPKOut (R+, R-) pins are controlled similarly, but independently of, the headphone output pins. They are intended to drive an 8 ohm or 4 ohm speaker pair.

3.14.2.1. Speaker Volume Control Registers

Register Address	Bit	Label	Type	Default	Description
R2 (2h) SPKVOLL	7	RSVD	R	0	Reserved
	6:0	SPKVOL_L [6:0]	RW	1101111 (0dB)	Left Speaker Volume 1111111 = +12dB 1111110 = +11.25dB … 1101111 = 0dB ... 0001000 to 0000001 = -77.25dB 0000000= Mute Note: If SPKVOLU is set, this setting will take effect after the next write to the Right Input Volume register.
R3 (3h) SPKVOLR	7	RSVD	R	0	Reserved
	6:0	SPKVOL_R [6:0]	RW	1101111 (0dB)	Right Speaker Volume 1111111 = +12dB 1111110 = +11.25dB … 1101111 = 0dB ... 0001000 to 0000001 = -77.25dB 0000000 = Mute

Table 38. SPKVOL L/R Registers

3.14.3. DDX™Class D Audio Processing

For additional information on the DDX™ Class D solution, please see the application note on www.idt.com.

The DDX™ Class D PWM Controller performs the following signal processing:

- Feedback filters are applied to shape any noise. The filters move noise from audible frequencies to frequencies above the audio range.
- The PWM block converts the data streams to tri-state PWM signals and sends them to the power stages.
- Finally, the Class-D controller block adjusts the output volume to provide constant output power across supply voltage.

The power stages boost the signals to higher levels, sufficient to drive speakers at a comfortable listening level.

3.14.3.1. Constant Output Power Mode

In normal operation the BTL amplifier is rated at 0.5W (full scale digital with 6dB BTL gain) into an 8 ohm load at 3.6V but will vary from about 0.38W to about 1.2W across a 3.1V to 5.5V supply range. However, when constant output power mode is enabled, the full scale output is held constant from 3.1V to 5.5V.

©2011 INTEGRATED DEVICE TECHNOLOGY, INC.

The BTL amplifier in ACS422x00 will continuously adjust to power supply changes to ensure that the full scale output power remains constant. This is not an automatic level control. Rather, this function prevents sudden volume changes when switching between battery and line power. Please note, when in this mode the amplifier efficiency may be reduced and decreases with higher supply voltages and lower target values.

A simple 5-bit ADC is used to monitor PVDD. As PVDD raises or lowers, the analog circuit will send a 5-bit code to the digital section that will average and then calculate a gain adjustment. The BTL audio signal will be multiplied by this gain value (in addition to the user volume controls).

The user will select a target value for the circuit. The constant output function will calculate a gain adjustment that will provide approximately the same full scale output voltage as provided when PVDD causes the same code value. So, if the target is 9 then a PVDD voltage of about 3.7V would generate a code value of 9 and a full scale output power of about 630mW into 8 ohms. If PVDD should rise to 4V, generating a code of 13, then the constant output power circuit would reduce the gain by 0.75dB (4 codes * 0.1875dB) to keep the full scale output at the target level.

The circuit may be configured to add gain, attenuation, or both to maintain the full-scale output level. If the needed adjustment falls outside of the range of the circuit (only attenuation is enabled and gain is needed, for example) then the circuit will apply as much correction as it is able. Through the use of gain, attenuation, and target values, different behaviors may be implemented:

- Attenuation only, target set to mimic a low supply voltage - Constant output level across battery state with constant quality (THD/SNR)
- Attenuation only, target set to mimic a moderate supply voltage - Output limiting to an approximate power level. Level will decrease at lower supply voltages but won't increase beyond a specific point.
- Gain only, target at or near max - Output will remain relatively constant but distortion will increase as PVDD is lowered. This mimics the behavior of common class-AB amplifiers.
- Gain and attenuation - Output remains at a level below the maximum possible at the highest supply voltage and above the theoretical full scale at minimum supply. Full scale PCM input clips when the supply voltage is low but won't become too loud when the supply voltage is high.

In addition to maintaining a constant output level, PVDD may be monitored for a large, sudden, change. If the High Delta function is enabled and PVDD changes more than 4 code steps since the last cycle, the output will be rapidly reduced then gradually increased to the target level.

When using this circuit, please take note of the following:

- The full scale output power may be limited by the supply voltage.
- Full scale output power is affected by other gain controls in the output path including the EQ and compressor/limiter.
- The Constant Output Power function is intended to help maintain a constant output level, not an exact output level. The output level for a specific target may vary part to part. If limiting is required for safety or other reasons, be conservative and set the target well below the maximum allowable level.
- Noise on the PVDD supply may cause erratic behavior. Use the recommended supply decoupling caps and verify that the power supply can support the peak currents demanded by a class-D amplifier.

©2011 INTEGRATED DEVICE TECHNOLOGY, INC.

Constant Output Power error (dB) relative to a target of 8 for an ideal part and the output error if left uncorrected across a 3.1 to 5.5V supply range.

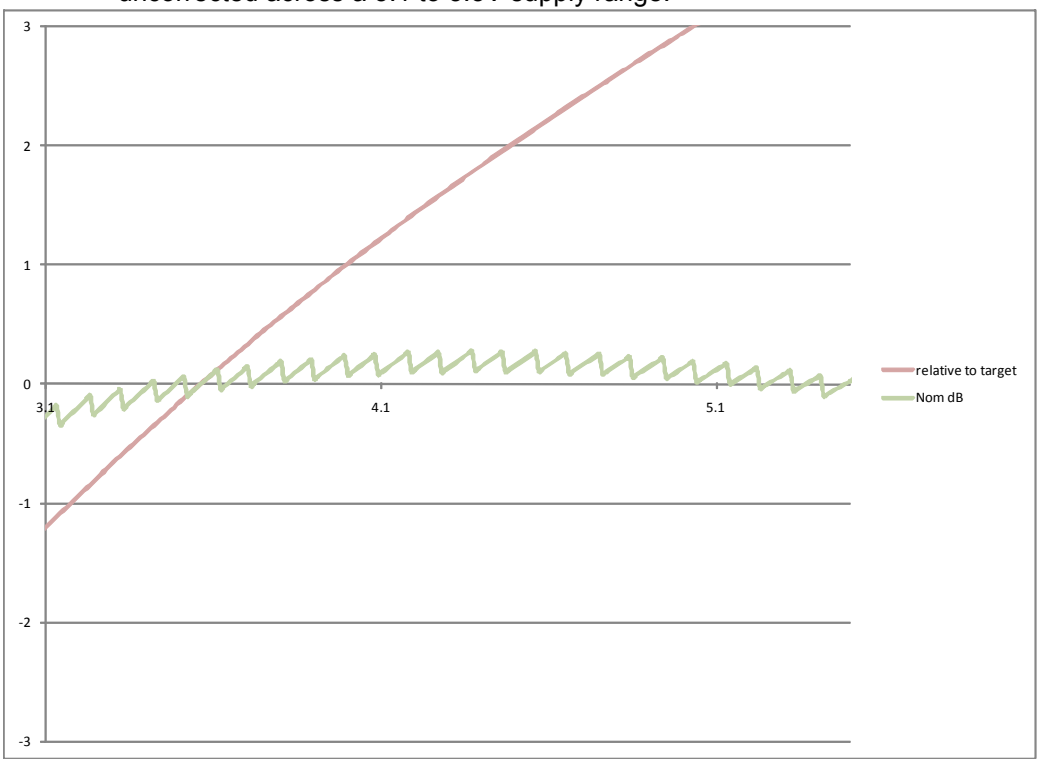

Figure 13. Constant Output Power Error

Constant Output Power for nominal and high/low reference across a 3.1 to 5.5V supply range.(Uncorrected power shown for reference) A target of 8 roughly corresponds to 0.5W at 3.6V into 8 ohms.

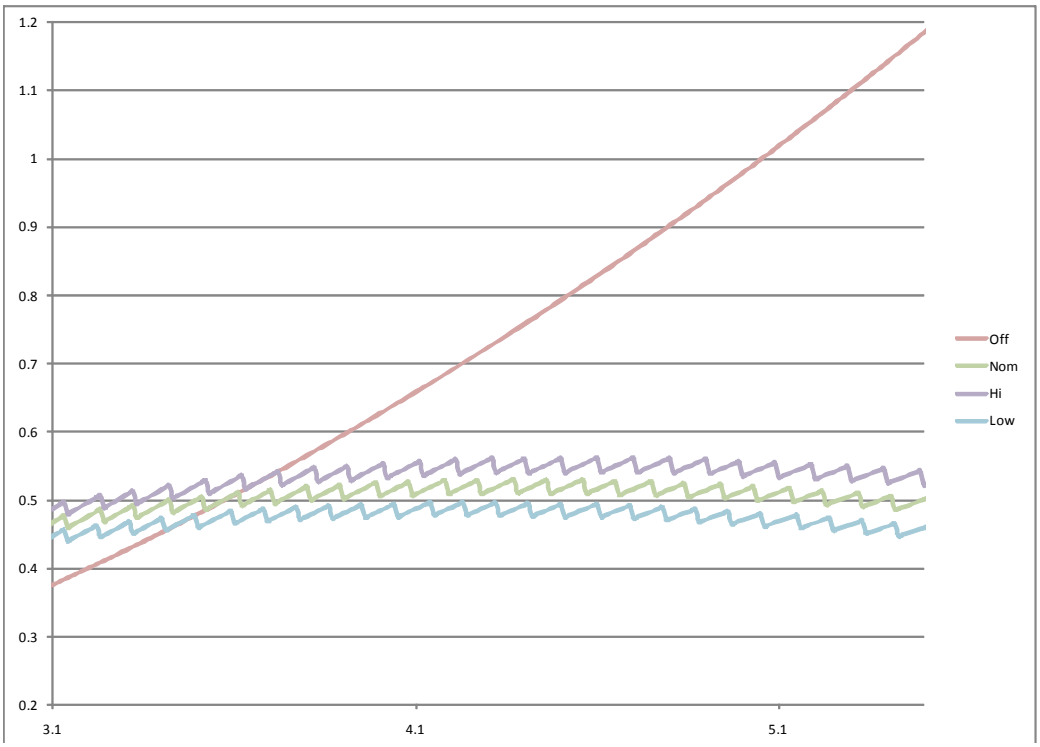

Figure 14. Constant Output Power nominal and high/low

©2011 INTEGRATED DEVICE TECHNOLOGY, INC.

3.14.3.2. Under Voltage Lock Out

When the PVDD supply becomes low, the BTL amplifier may be disabled to help prevent undesirable amplifier operation (overheat) or system level problems (battery under-voltage.)

The same circuit that monitors the PVDD supply to help maintain a constant output power is used to monitor the PVDD supply for a critical under-voltage situation. If the sense circuit consistently returns a 0 code then the PVDD supply is less than the minimum required for proper operation. To prevent accidental shutdown due to a noisy supply at the minimum operating range, the output of the PVDD sense circuit will be averaged for at least 200ms.

3.14.3.3. Registers

- **Constant Output Power 1**

Register Address	Bit	Label	Type	Default	Description
R34 (22h) Constant Output Power 1	7	COPAtten	RW	0	1 = Constant Output Power function will use attenuate the BTL output if the PVDD sense circuit returns a code higher than the target value.
	6	COPGain	RW	0	1 = Constant Output Power function will use attenuate the BTL output if the PVDD sense circuit returns a code higher than the target value.
	5	HDeltaEn	RW	0	1 = If the PVDD code value has changed more than 4 counts since the last gain adjustment, the output will be reduced rapidly then slowly returned to the target level.
	4:0	COPTarget[4:0]	RW	8h	5-bit target for the Constant Output Power function.

Table 39. Constant Output Power 1 Register

- **Constant Output Power 2**

Register Address	Bit	Label	Type	Default	Description
R35 (23h) Constant Output Power 2	7	RSVD	R	0	Reserved
	6	RSVD	R	0	Reserved
	5:3	AvgLength[2:0]	RW	000	Number of sense cycles to average: 000 = 1 001 = 2 010 = 4 011 = 8 100 = 16 101 = 32 110 = 64 111 = 128
	2:0	MonRate[2:0]	RW	100	Rate the PVDD supply is monitored: 000 = 0.0625ms 001 = 0.125ms 010 = 0.25ms 011 = 0.5ms 100 = 1ms 101 = 2ms 110 = 4ms 111 = 8ms

Table 40. Constant Output Power 2 Register

©2011 INTEGRATED DEVICE TECHNOLOGY, INC.

- **Constant Output Power 3**

Register Address	Bit	Label	Type	Default	Description
R137 (89h) Constant Output Power 3	7	HighDelta	R	0	1 = A high delta situation has been detected (positive code change > 4) and the constant output power function is adjusting.
	6	RSVD	R	0	1 = Constant Output Power function will use attenuate the BTL output if the PVDD sense circuit returns a code higher than the target value.
	5:0	COPAdj	R	0h	Amount that the Constant Output Power function is adjusting the signal gain. Value is 2s compliment with each step equal to 0.1875dB. The approximate range is +/- 6dB

Table 41. Constant Output Power 3 Register

- **Configuration Register**

Register Address	Bit	Label	Type	Default	Description
R31 (1Fh) CONFIG0	7:6	ASDM[1:0]	RW	10h	ADC Modulator Rate
	5:4	DSDM[1:0]	RW	10h	DAC Modulator Rate
	3:2	RSVD	R	0h	Reserved for future use.
	1	dc_bypass	RW	0	1 = bypass DC removal filter **(WARNING DC content can damage speakers)**
	0	RSVD	R	0	Reserved

Table 42. CONFIG0 Register

- **PWM Control 0 Register**

Register Address	Bit	Label	Type	Default	Description
R66 (42h) PWM0	7:5	SCTO	RW	11	Class-D Short Circuit Detect Time-out 00 = 10uS 01 = 100uS 10 = 500uS 11 = 100mS
	5	UVLO	RW	1	Under Voltage Lock Out 1 = BTL output disabled if PVDD sense circuit returns code 0
	4	roundup	RW	1	1 = roundup, 0 = truncate for quantizer
	3	bfclr	RW	0	1 = disable binomial filter
	2	fourthorder	RW	1	1 = 4th order binomial filter; 0 = 3rd order
	1	add3_sel	RW	0	1 = 24-bit Noise Shaper output (pre-quantizer) 0 = 8/9/10-bit quantizer output
	0	quantizer_sel	RW	0	

Table 43. PWM0 Register

©2011 INTEGRATED DEVICE TECHNOLOGY, INC.

- **PWM Control 1 Register**

Register Address	Bit	Label	Type	Default	Description
R67 (43h) PWM1	7	RSVD	R	0	Reserved
	6:2	dithpos[4:0]	RW	0	Dither position, where dither inserted after NS. 0,1,2 = dither bits 2:0 4 = dither bits 3:1 5 = dither bits 4:1 .... 19 = dither bits 19:17
	1	dith_range	RW	0	1 = dither -1 to +1, 0 = -3 to +3
	0	dithclr	RW	0	1 = disable dither

Table 44. PWM1 Register

- **PWM Control 2 Register**

Register Address	Bit	Label	Type	Default	Description
R68 (44h) PWM2	7:2	dvalue[5:0]	RW	18h	dvalue constant field
	1	pwm_outflip	RW	0	1 = swap pwm a/b output pair for all channels The control lines to the power stage are swapped inverting the output signal.
	0	pwm_outmode	RW	1	1 = tristate, 0 = binary

Table 45. PWM2 Register

- **PWM Control 3 Register**

Register Address	Bit	Label	Type	Default	Description
R69 (45h) PWM3	7:6	outctrl[1:0]	RW	00	pwm output muxing 0 = normal 1 = swap 0/1 2 = ch0 on both 3 = ch1 on both
	5:0	cvalue[5:0]	RW	0Ah	tristate constant field, must be even and not 0

Table 46. PWM3 Register

3.15. Other Output Capabilities

Each audio analog output can be separately enabled. Disabling outputs serves to reduce power consumption, and is the default state of the device.

©2011 INTEGRATED DEVICE TECHNOLOGY, INC.

3.15.1. Audio Output Control

See Power management section. The output enable bits are also power management bits and the outputs will be turned off when disabled.

Register Address	Bit	Label	Type	Default	Description
R27 (1Bh) Power Management (2)	7	D2S	RW	0	Analog in D2S AMP Enable
	6	HPOutL	RW	0	Left Headphone Output Enable
	5	HPOutR	RW	0	Right Headphone Output Enable
	4	SPKOutL	RW	0	Left Speaker Output Enable
	3	SPKOutR	RW	0	Right Speaker Output Enable
	2	RSVD	RW	0	
	1	RSVD	RW	0	
	0	VREF	RW	1	Voltage reference
Note: A value of “1” indicates the output is enabled; a value of ‘0’ disables the output.					

Table 47. Power Management 2 Register

3.15.2. Headphone Switch

The HPDETECT pin is used to detect connection of a headphone. When headphone insertion is detected, the codec can automatically disable the speaker outputs and enable the headphone outputs. Control bits determine the meaning and polarity of the input.

In addition to enabling and disabling outputs, the EQ may also be controlled using the HP_DET pin. The 2 EQ filters may be configured so that one EQ is active when the Headphone output is active and the other EQ is active when the Speaker output is active (independent HP and Speaker EQ). One EQ may be enabled only when the Speaker is active and the other EQ may be on when either of the outputs are active (Speaker compensation and USER EQ) or other combinations are possible. Note that the EQ coefficients must be programmed and the EQs must be enabled using their control registers. The HP_DET logic can only disable the EQ filters.

©2011 INTEGRATED DEVICE TECHNOLOGY, INC.

3.15.2.1. Headphone Switch Register

Register Address	Bit	Label	Type	Default	Description
R29 (1Ch) Additional Control (CTL)	7	HPSWEN	RW	0	Headphone Switch Enable 0: Headphone switch disabled 1: Headphone switch enabled
	6	HPSWPOL	RW	0	Headphone Switch Polarity 0: HPDETECT high = headphone 1: HPDETECT high = speaker
	5:4	EQ2SW[1:0]	RW	00	EQ2 behavior due to speaker/headphone output state
	3:2	EQ1SW[1:0]	RW	00	EQ1 behavior due to speaker/headphone output state
	1	TSDEN	RW	0	Thermal Shutdown Enable (See section 7.9) 0: thermal shutdown disabled 1: thermal shutdown enabled
	0	TOEN	RW	0	Zero Cross Time-out Enable 0: Time-out Disabled 1: Time-out Enabled - volumes updated if no zero cross event has occurred before time-out

Table 48. Additional Control Register

3.15.3. Headphone Operation

HPSWEN	HPSWPOL	HP_DET Pin state	HPOut[1]	SPKOut[2]	Headphone Enabled	Speaker Enabled
0	X	X	0	0	no	no
0	X	X	0	1	no	yes
0	X	X	1	0	yes	no
0	X	X	1	1	yes	yes
1	0	0	X	0	no	no
1	0	0	X	1	no	yes
1	0	1	0	X	no	no
1	0	1	1	X	yes	no
1	1	0	0	X	no	no
1	1	0	1	X	yes	no
1	1	1	X	0	no	no
1	1	1	X	1	no	yes

Table 49. Headphone Operation

1.HPOut = Logical OR of the HPL and HPR enable (power state) bits
2.SPKOut = Logical OR of the SPKL and SPKR enable (power state) bits

3.15.4. EQ Operation

EQnSW1	EQnSW0	EQ Behavior[1]
0	0	EQ is not disabled due to Headphone/Speaker logic
0	1	EQ is disabled when Headphone output is active
1	0	EQ is disabled when Speaker output is active
1	1	EQ is disabled when Headphone AND Speaker output are active

Table 50. EQ Operation

1.EQ must be enabled. EQ behavior is dependent on HP_DET and Output power state programming.

©2011 INTEGRATED DEVICE TECHNOLOGY, INC.

3.16. Thermal Shutdown

To avoid overpowering and overheating the codec when the amplifier outputs are driving large currents, the ACS422x00 incorporates a thermal protection circuit. If enabled, and the device temperature reaches approximately 150°C, the speaker and headphone amplifier outputs will be disabled. Once the device cools, the outputs will be automatically re-enabled.

3.16.1. Algorithm description:

There are 2 trip points, “high” and “low”. High indicates a critical overheat requiring a reduction in volume to avoid damage to the part. Low is set for a slightly lower temperature point, indicating that the current level is safe but that increased volume would result in a critical overheat condition.

Normally, the overheat bits are polled every 8ms but may be polled at 4ms, 8ms, 16ms, or 32ms by adjusting the Poll value. Reductions in volume will be allowed to happen at the Poll rate. Increases in volume are programmable to happen every 1, 2, 4, or 8 Poll cycles and in steps of 0.75dB to 6dB. This allows a full scale volume increase in a range of 10s of milliseconds to 10s of seconds.

When both overheat bits are 0, the volume is allowed to increment by the IncStep size, unless the volume has already reached the maximum value allowed. Any subsequent increment will be held off until the programmed number of polling cycles have occurred.

When the low overheat bit is 1 and the high overheat bit is 0, this indicates that the volume is currently at a safe point but the temperature is higher than desired and incrementing the volume may cause severe overheating. The volume is held at the current value.

When the high overheat bit is 1, damage could occur, so the volume setting will be immediately reduced by the Decrement Step value. As the overheat bits are re-polled, this volume reduction will continue until the high overheat bit drops to 0 or the volume value reaches the minimum setting. If the high overheat bit remains 1 even at the minimum setting, then the mute control bit will be asserted. If the high overheat bit persists even after mute, then the BTL amp will be powered down.

3.16.2. Thermal Trip Points.

The high and low trip points can be adjusted to suit the needs of a particular system implementation. There is a “shift” value (TripShift) which sets the low trip point, and there is a “split” value (TripSplit) that sets how many degrees above the low trip point the high trip point is.

By default:

TripShift = 2 (140 degrees C)
TripSplit = 0 (15 degrees C)

Therefore:

High Trip Point = 155°C.
Low Trip Point = 140°C.

©2011 INTEGRATED DEVICE TECHNOLOGY, INC.

3.16.3. Temperature Limit State Diagram:

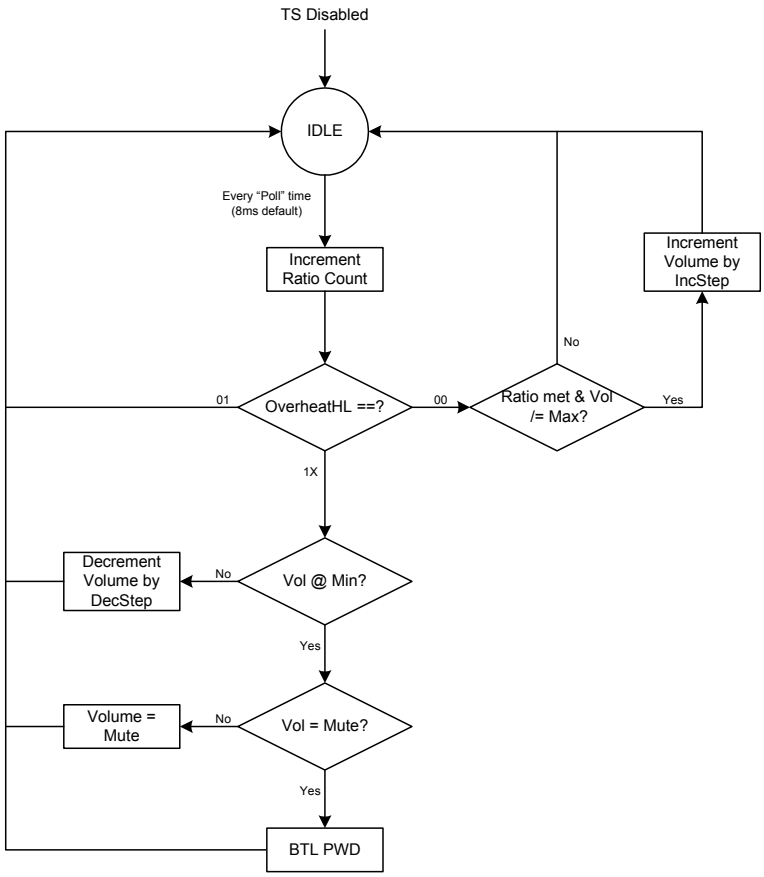

Figure 15. Temp sense volume adjustment algorithm

3.16.4. Instant Cut Mode

This mode can be used to make our algorithm react faster to reduce thermal output but will cause more pronounced volume changes. If enabled:

- Only the high overheat is used, the low overheat is ignored.
- Whenever polled, if the high overheat is 1, then the volume setting will immediately be set to 0h.
- Conversely, if the high overheat is 0, the volume setting will immediately be set to the MaxVol value.
- Both volume clear and volume set events occur at the polling rate.

During this mode, the algorithm still possesses the ability to mute and then power down the BTL amp if the high overheat continues to be 1.

This mode is disabled by default.

©2011 INTEGRATED DEVICE TECHNOLOGY, INC.

3.16.5. Short Circuit Protection

To avoid damage to the outputs if a short circuit condition should occur, both the headphone and BTL amplifiers implement short circuit protection circuits. The headphone output amplifier will detect the load current and limit its output if in an over current state. The BTL amplifier will sense a short to PVDD, ground, or between its +/- outputs and disable its output if a short is detected. After a brief time, the amplifier will turn on again. If a short circuit condition is still present, the amplifier will disable itself again.

3.16.6. Thermal Shutdown Registers

The thermal shutdown circuit is enabled using the Additional Control Register, see Table 51.

3.16.6.1. Headphone Switch Register

Register Address	Bit	Label	Type	Default	Description
R29 (1Ch) Additional Control (CTL)	7	HPSWEN	RW	0	Headphone Switch Enable 0: Headphone switch disabled 1: Headphone switch enabled
	6	HPSWPOL	RW	0	Headphone Switch Polarity 0: HPDETECT high = headphone 1: HPDETECT high = speaker
	5:4	EQ2SW[1:0]	RW	00	EQ2 behavior due to speaker/headphone output state
	3:2	EQ1SW[1:0]	RW	00	EQ1 behavior due to speaker/headphone output state
	1	TSDEN	RW	0	Thermal Shutdown Enable (See section 7.9) 0: thermal shutdown disabled 1: thermal shutdown enabled
	0	TOEN	RW	0	Zero Cross Time-out Enable 0: Time-out Disabled 1: Time-out Enabled - volumes updated if no zero cross event has occurred before time-out

Table 51. Additional Control Register

©2011 INTEGRATED DEVICE TECHNOLOGY, INC.

3.16.6.2. Temp Sensor Control/Status Register

Register Address	Bit	Label	Type	Default	Description
R29 (1Dh) Temp Sensor Control/Status (THERMTS)	7	TripHighStat	R	0	Temp sensor high trip point status 0 = Normal Operation 1 = Over Temp Condition
	6	TripLowStat	R	0	Temp sensor low trip point status 0 = Normal Operation 1 = Over Temp Condition
	5:4	TripSplit[1:0]	RW	0h	Temp sensor “split” setting. Determines how many degrees above the low trip point the high trip is set: 0h = 15 Degrees C 1h = 30 Degrees C 2h = 45 Degrees C 3h = 60 Degrees C.
	3:2	TripShift[1:0]	RW	2h	Temp sensor “shift” setting. Determines the low trip temperature: 0h = 110 Degrees C 1h = 125 Degrees C 2h = 140 Degrees C 3h = 155 Degrees C.
	1:0	Poll[1:0]	RW	1h	Temp sensor polling interval 0h = 4ms 1h = 8ms 2h = 16ms 3h = 32ms

Table 52. THERMTS Register

©2011 INTEGRATED DEVICE TECHNOLOGY, INC.

3.16.6.3. Temp Sensor Status Register

Register Address	Bit	Label	Type	Default	Description
R30 (1Eh) Speaker Thermal Algorithm Control (THERMSPKR1)	7	ForcePwd	RW	1	Force powerdown enable for the speaker thermal algorithm: 0 = Speaker will remain powered up even if the temp sensor continues to report an overheat condition at minimum volume (mute) 1 = Speaker will be powered down if the temp sensor reports an overheat at the minimum volume (mute)
	6	InstCutMode	RW	0	Instant Cut Mode 0 = Both temp sensor status bits used to smoothly adjust the volume. 1 = Only the high temp sensor status bit will be used to set the volume. volume will be set to the full volume or mute (IncStep and DecStep are ignored.)
	5:4	IncRatio[1:0]	RW	0h	Increment interval ratio. Determines the ratio between the speaker volume increment interval and the speaker volume decrement interval (increment rate is equal to or slower than decrement rate): 0h = 1:1 1h = 2:1 2h = 4:1 3h = 8:1
	3:2	IncStep[1:0]	RW	0h	Increment step size for the speaker thermal control algorithm (occurs at the temp sensor polling rate X the increment interval ratio.) 0h = 0.75dB 1h = 1.5dB 2h = 3.0dB 3h = 6.0dB
	1:0	DecStep[1:0]	RW	1h	Decrement step size for the speaker thermal control algorithm (occurs at the temp sensor polling rate.) 0h = 3dB 1h = 6dB 2h = 12dB 3h = 24dB

Table 53. THERMTSPKR1 Register

Register Address	Bit	Label	Type	Default	Description
R136 (88h) Speaker Thermal Algorithm Status (THERMSPKR2)	7	ForcePwdStatus	R	0	0: Speaker not powered down due to thermal algorithm 1: Speaker has been powered down because overtemp condition was present even though the speaker was muted.
	6:0	VolStatus[6:0]	R	08	Current speaker volume value. If no overheat is being reported by the temperature sensor, this value should be equal to the greater of the left or right speaker volume setting.

Table 54. THERMTSPKR2 Register

©2011 INTEGRATED DEVICE TECHNOLOGY, INC.

4. INPUT AUDIO PROCESSING

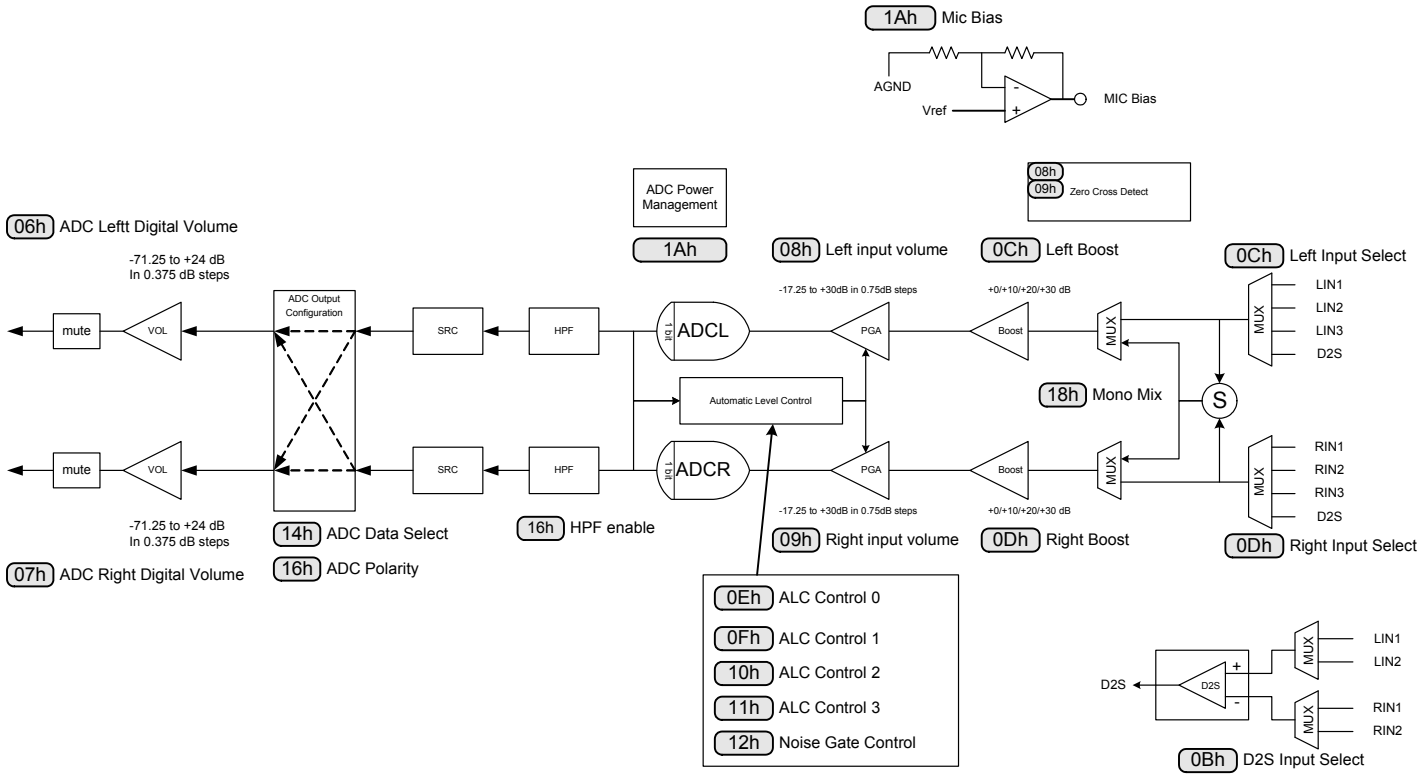

Figure 16. Input Audio Processing

4.1. Analog Inputs

The ACS422x00 provides multiple high impedance, low capacitance AC-coupled analog inputs with an input signal path to the stereo ADCs. Prior to the ADC, there is a multiplexor that allows the system to select which input is in use. Following the mux, there is a programmable gain amplifier and also an optional microphone gain boost. The gain of the PGA can be controlled either by the system, or by the on-chip level control function. The stereo record path can also operate with the two channels mixed to mono either in the analog or digital domains.

Signal inputs are biased internally to AVSS but AC coupling capacitors are required when connecting microphones (due to the 2.5V microphone bias) or when offsets would cause unacceptable “zipper noise” or pops when changing PGA or boost gain settings. To avoid audio artifacts, the line inputs are kept biased to analog ground when they are muted or the device is placed into standby mode.

©2011 INTEGRATED DEVICE TECHNOLOGY, INC.

4.1.1. Input Registers

Register Address	Bit	Label	Type	Default	Description
R12 (0Ch) ADC Signal Path Control Left (INSELL)	7:6	INSEL_L	RW	00	Left Channel Input Select 00 = LINPUT1 01 = LINPUT2 10 = LINPUT3 11 = D2S
	5:4	MICBST_L	RW	00	Left Channel Microphone Gain Boost 00 = Boost off (bypassed) 01 = 10dB boost 10 = 20dB boost 11 = 30dB boost
	3:0	RSVD	R	0000	Reserved
R13 (0Dh) ADC Signal Path Control Right (INSELR)	7:6	INSEL_R	RW	00	Right Channel Input Select 00 = RINPUT1 01 = RINPUT2 10 = RINPUT3 11 = D2S
	5:4	MICBST_R	RW	00	Right Channel Microphone Gain Boost 00 = Boost off (bypassed) 01 = 10dB boost 10 = 20dB boost 11 = 30dB boost
	3:0	RSVD	R	0000	Reserved

Table 55. Input Software Control Register

4.2. Mono Mixing and Output Configuration

The stereo ADC can operate as a stereo or mono device, or the two channels can be mixed to mono. Mixing can occur either in the input path (analog, before ADC) or after the ADC. MONOMIX determines whether to mix to mono, and where.

For analog mono mix, either the left or right channel ADC can be used for the audio stream. The other ADC may be powered off to conserve power. A differential input amplifier may be selected as a mono source to either ADC input. This D2S amplifier can select either Input 1 or Input 2 using the DS bit.

The system also has the flexibility to select the data output. ADCDSEL configures the interface, assigning the source of the left and right ADC independently.

©2011 INTEGRATED DEVICE TECHNOLOGY, INC.

4.2.1. ADC Registers

4.2.1.1. ADC D2S Input Mode Register

Register Address	Bit	Label	Type	Default	Description
R11 (0Bh) ADC Input mode (INMODE)	7:1	RSVD	R	0h	Reserved
	0	DS	RW	0	Differential Input Select 0: LIN1 - RIN1 1: LIN2 - RIN2

Table 56. INMODE Register

4.2.1.2. ADC Mono, Filter and Inversion Register

Register Address	Bit	Label	Type	Default	Description
R22 (16h) ADC Control (CNVRTR0)	7	ADCPOLR	RW	0	ADC Right Channel Polarity 0 = normal 1 = inverted
	6	ADCPOLL	RW	0	ADC Left Channel Polarity 0 = normal 1 = inverted
	5:4	AMONOMIX [1:0]	RW	00	ADC mono mix 00: Stereo 01: Analog Mono Mix (using left ADC) 10: Analog Mono Mix (using right ADC) 11: Digital Mono Mix (ADCL/2 + ADCR/2 on both Left and Right ADC outputs)
	3	ADCMU	RW	1	1 = Mute ADC
	2	HPOR	RW	0	High Pass Offset Result 0 = discard offset when HPF disabled 1 = store and use last calculated offset when HPF disabled
	1	ADCHPDR	RW	0	ADC High Pass Filter Disable (Right)
	0	ADCHPDL	RW	0	ADC High Pass Filter Disable (Right)

Table 57. CNVRTR0 Register

4.2.1.3. ADC Data Output Configuration Register

Register Address	Bit	Label	Type	Default	Description
R20 (14h) Audio Interface Control 2 (AIC2)	7:6	DACDSEL[1:0]	RW	00	00: left DAC = left I2S data; right DAC = right I2S data 01: left DAC = left I2S data; right DAC = left I2S data 10: left DAC = right I2S data; right DAC = right I2S data 11: left DAC = right I2S data; right DAC = left I2S data
	5:4	ADCDSEL[1:0]	RW	00	00: left I2S data = left ADC; right I2S data = right ADC 01: left I2S data = left ADC; right I2S data = left ADC 10: left I2S data = right ADC; right I2S data = right ADC 11: left I2S data = right ADC; right I2S data = left ADC
	3	TRI	RW	0	Interface Tri-state (See Section 9.2.4)
	2:0	BLRCM	RW	0	Bitclock and LRClock mode (See Section 9.2.4)

Table 58. AIC2 Register

©2011 INTEGRATED DEVICE TECHNOLOGY, INC.

4.3. Microphone Bias

The MICBIAS output is used to bias electric type microphones. It provides a low noise reference voltage used for an external resistor biasing network. The MICB control bit is used to enable the output.

The MICBIAS can source up to 3mA of current; therefore, the external resistors must be large enough to conform to this limit.

4.3.1. Microphone Bias Control Register

Register Address	Bit	Label	Type	Default	Description
R26 (1Ah) Power Management (1)	1	MICB	RW	0	Microphone Bias Enable 0 = OFF (high impedance output) 1 = ON

Table 59. Power Management 1 Register - Mic Bias Enable

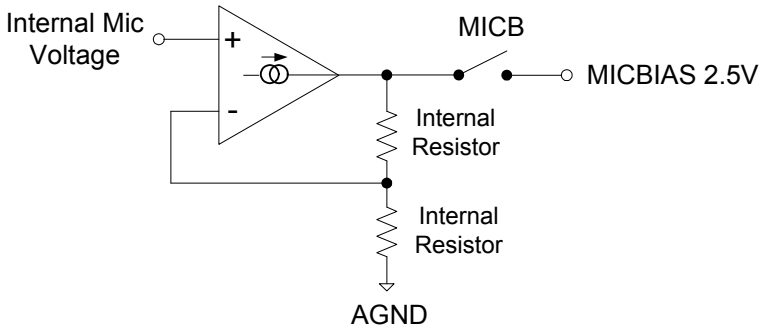

Figure 17. Mic Bias

4.4. Programmable Gain Control

The Programmable Gain Amplifier (PGA) enables the input signal level to be matched to the ADC input range. Amplifier gain is adjustable across the range +30dB to –17.25dB (using 0.75dB steps). The PGA can be controlled directly by the system software using the Input Volume Control registers (INVOLL and INVOLR), or alternately the Automatic Level Control (ALC) function can automatically control the gain. If the ALC function is used, writing to the Input Volume Control registers has no effect.

Left and right input gains are independently adjustable. By controlling the update bit (INVOLU), the left and right gain settings can be simultaneously updated. To eliminate zipper noise, LZCEN and RZCEN bits enable a zero-cross detector to insure changes only occur when the signal is at zero. A time-out for zero-cross is also provided, using TOEN in register R29 (1Dh).

Software can also mute the inputs in the analog domain.

©2011 INTEGRATED DEVICE TECHNOLOGY, INC.

4.4.1. Input PGA Software Control Register.

Register Address	Bit	Label	Type	Default	Description
R8 (08h) Left Input Volume (INVOLL)	7	RSVD	RW	0	
	6	IZCL	RW	0	Left Channel Zero Cross Detector 1 = Change gain on zero cross only 0 = Change gain immediately Note: If INVOLU is set, this setting will take effect after the next write to the Right Input Volume register.
	5:0	INVOL_L [5:0]	RW	010111 (0dB)	Left Channel Input Volume Control 111111 = +30dB 111110 = +29.25dB .. 0.75dB steps down to 000000 = -17.25dB Note: If INVOLU is set, this setting will take effect after the next write to the Right Input Volume register.
R9 (09h) Right Input Volume (INVOLR)	7	RSVD	RW	0	
	6	IZCR	RW	0	Right Channel Zero Cross Detector 1 = Change gain on zero cross only 0 = Change gain immediately
	5:0	INVOL_R [5:0]	RW	010111 (0dB)	Right Channel Input Volume Control 111111 = +30dB 111110 = +29.25dB .. 0.75dB steps down to 000000 = -17.25dB
R28 (1Ch) Additional Control (CTL)	0	TOEN	RW	0	Zero Cross Time-out Enable 0: Time-out Disabled 1: Time-out Enabled - volumes updated if no zero cross event has occurred before time-out

Table 60. INVOL L&R Registers

4.5. ADC Digital Filter

To provide the correct sampling frequency on the digital audio outputs, ADC filters perform true 24-bit signal processing and convert the raw multi-bit oversampled data from the ADC using the digital filter path illustrated below.

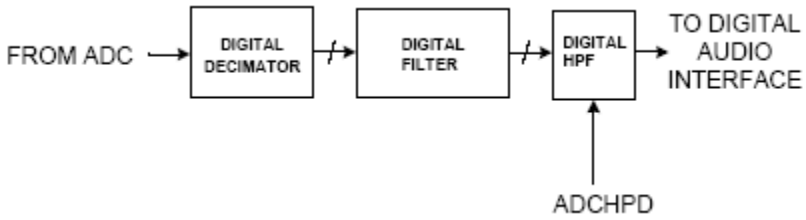

Figure 18. ADC Filter Data path

©2011 INTEGRATED DEVICE TECHNOLOGY, INC.

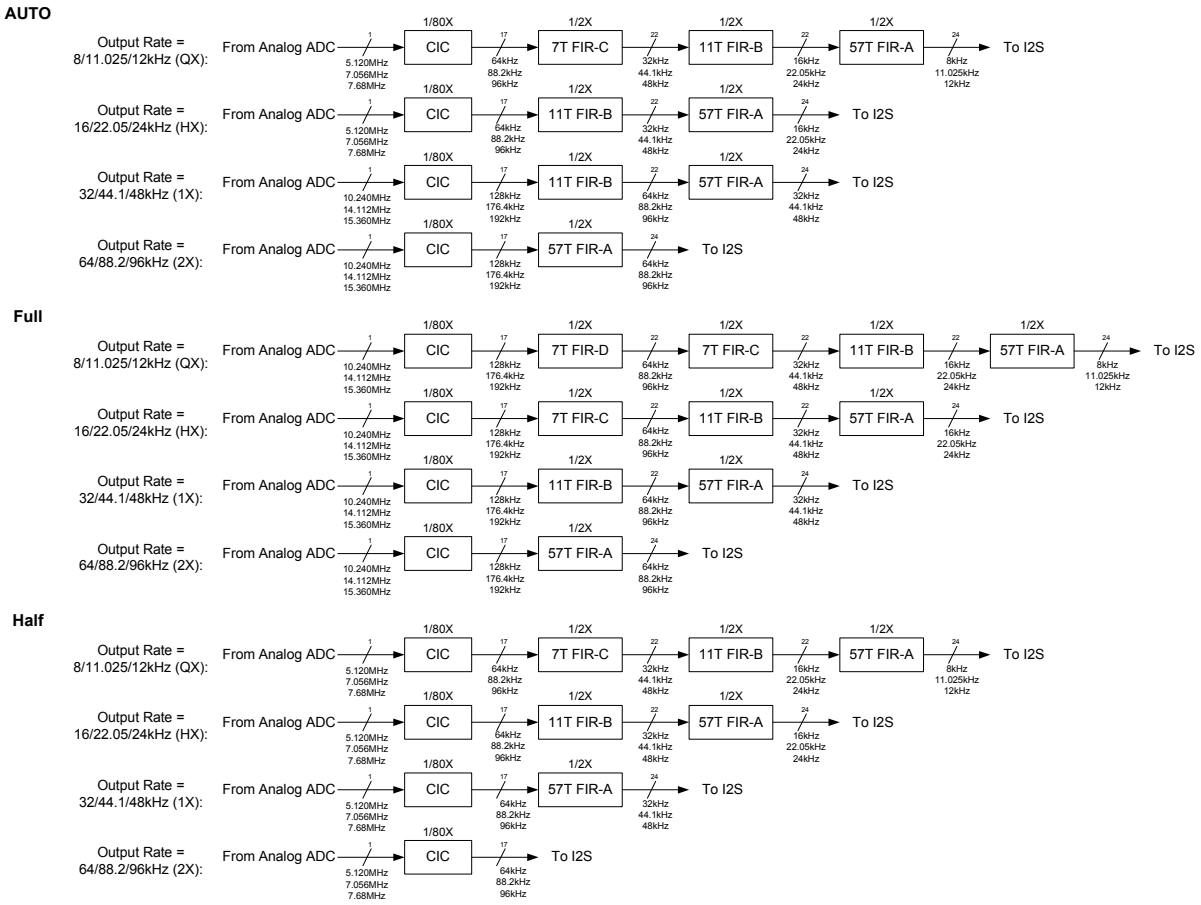

Figure 19. ADC Input processing

The ADC digital filters contain a software-selectable digital high pass filter. When the high-pass filter is enabled, the dc offset is continuously calculated and subtracted from the input signal. The HPOR bit enables the last calculated DC offset value to be stored when the high-pass filter is disabled; this value will then continue to be subtracted from the input signal. To provide support for calibration, the stored and subtracted value will not change unless the high-pass filter is enabled even if the DC value is changed. The high pass filter may be enabled separately for each of the left and right channels.

The output data format can be programmed by the system. This allows stereo or mono recording streams at both inputs. Software can change the polarity of the output signal.

©2011 INTEGRATED DEVICE TECHNOLOGY, INC.

4.5.1. ADC Signal Path Control Register

Register Address	Bit	Label	Type	Default	Description
R22 (16h) ADC Control (CNVRTR0)	7	ADCPOLR	RW	0	0 = Right polarity not inverted 1 = Right polarity inverted
	6	ADCPOLL	RW	0	0 = Left polarity not inverted 1 = Left polarity inverted
	5:4	AMONOMIX [1:0]	RW	00	ADC mono mix 00: Stereo 01: Analog Mono Mix (using left ADC) 10: Analog Mono Mix (using right ADC) 11: Digital Mono Mix
	3	ADCMU	RW	1	1 = Mute ADC
	2	HPOR	RW	0	High Pass Offset Result 0 = discard offset when HPF disabled 1 = store and use last calculated offset when HPF disabled
	1	ADCHPDR	RW	0	ADC High Pass Filter Disable (Right)
	0	ADCHPDL	RW	0	ADC High Pass Filter Disable (Right)

Table 61. CNVRTR0 Register

4.5.2. ADC High Pass Filter Enable modes

ADCHPDR	ADCHPDL	High Pass Mode
0	0	High-pass filter enabled on left and right channels
0	1	High-pass filter disabled on left channel, enabled on right channel
1	0	High-pass filter enabled on left channel, disabled on right channel
1	1	High-pass filter disabled on left and right channels

Table 62. ADC HPF Enable

4.6. Digital ADC Volume Control

The ADC volume can be controlled digitally, across a gain and attenuation range of -71.25dB to +24dB (0.375dB steps). The level of attenuation is specified by an eight-bit code ‘ADCVOL_x’, where ‘x’ is L, or R. The value “00000000” indicates mute; other values describe the number of 0.375dB steps above -71.25dB.

The ADCVOLU bit controls the updating of digital volume control data. When ADCVOLU is written as ‘0’, the ADC digital volume is immediately updated with the ADCVOL_L data when the Left ADC Digital Volume register is written. When ADCVOLU is set to ‘1’, the ADCVOL_L data is held in an internal holding register until the Right ADC Digital Volume Register is written.

©2011 INTEGRATED DEVICE TECHNOLOGY, INC.

4.6.1. ADC Digital Registers

Register Address	Bit	Label	Type	Default	Description
R6 (06h) Left ADC Digital Volume	7:0	ADCVOL_L [7:0]	RW	10111111 (0dB)	Left ADC Digital Volume Control 0000 0000 = Digital Mute 0000 0001 = -71.25dB 0000 0010 = -70.875dB ... 0.375dB steps up to 1111 1111 = +24dB Note: If ADCVOLU is set, this setting will take effect after the next write to the Right Input Volume register.
R7 (07h) Right ADC Digital Volume	7:0	ADCVOL_R [7:0]	RW	10111111 (0dB)	Right ADC Digital Volume Control 0000 0000 = Digital Mute 0000 0001 = -71.25dB 0000 0010 = -70.875dB ... 0.375dB steps up to 1111 1111 = +24dB

Table 63. L/R ADC Digital Volume Registers

4.7. Automatic Level Control (ALC)

The ACS422x00 has an automatic level control to achieve recording volume across a range of input signal levels. The device uses a digital peak detector to monitor and adjusts the PGA gain to provide a signal level at the ADC input. A range of adjustment between –6dB and –28.5dB (relative to ADC full scale) can be selected. The device provides programmable attack, hold, and decay times to smooth adjustments. The level control also features a peak limiter to prevent clipping when the ADC input exceeds a threshold. Note that if the ALC is enabled, the input volume controls are ignored.

4.7.1. ALC Operation

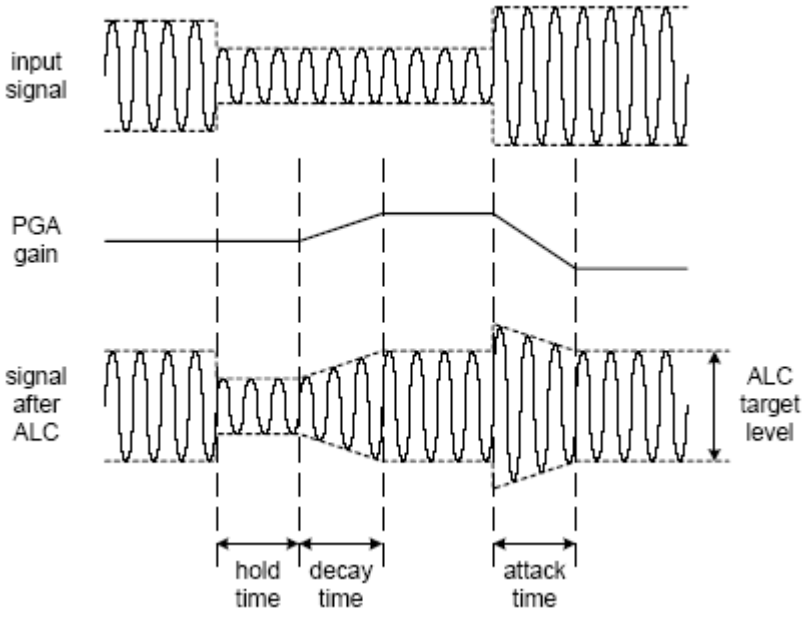

Figure 20. ALC Operation

When ALC is enabled, the recording volume target can be programmed between –6dB and –28.5dB (relative to ADC full scale). The ALC will attempt to keep the ADC input level to within +/-0.5dB of the target level. An upper limit for the PGA gain can also be imposed, using the MAXGAIN control bits.

©2011 INTEGRATED DEVICE TECHNOLOGY, INC.

Hold time specifies the delay between detecting a peak level being below target, and the PGA gain beginning to ramp up. It is specified as 2^n*2.67mS, enabling a range between 0mS and over 40s.; ramp-down begins immediately if the signal level is above the target.

Decay (Gain Ramp-Up) Time is the time that it takes for the PGA to ramp up across 90% of its range. The time is 2^n*24mS. The time required for the recording level to return to its target value therefore depends on the decay time and on the gain adjustment required.

Attack (Gain Ramp-Down) Time is the time that it takes for the PGA to ramp down across 90% of its range. Time is specified as 2^n*24mS. The time required for the recording level to return to its target value depends on both the attack time and on the gain adjustment required.

When operating in stereo, the peak detector takes the maximum of left and right channel peak values, and both PGAs use the same gain setting, to preserve the stereo image. If the ALC function is only enabled on one channel, only one PGA is controlled by the ALC mechanism, and the other channel runs independently using the PGA gain set through the control registers.

If one ADC channel is unused, the peak detector will ignore that channel.

The ALC function can operate when the two ADC outputs are mixed to mono in the digital domain or in the analog domain.

©2011 INTEGRATED DEVICE TECHNOLOGY, INC.

4.7.2. ALC Registers

Register Address	Bit	Label	Type	Default	Description
R14 (0Eh) ALC Control 0	7:3	RSVD	R	00000	Reserved
	2	ALC MODE	RW	0	0: ALC Mode 1: Limiter mode
	1:0	ALCSEL [1:0]	RW	00 (OFF)	ALC function select 00 = ALC off (PGA gain set by register) 01 = Right channel only 10 = Left channel only 11 = Stereo (PGA registers unused) Note: ensure that LINVOL and RINVOL settings (reg. 0 and 1) are the same before entering this mode.
R15 (0Fh) ALC Control 1	7	RSVD	R	0	Reserved
	6:4	MAXGAIN [2:0]	RW	111 (+30dB)	Set Maximum Gain of PGA 111: +30dB 110: +24dB ….(-6dB steps) 001: -6dB 000: -12dB
	3:0	ALCL [3:0]	RW	1011 (-12dB)	ALC target – sets signal level at ADC input 0000 = -28.5dB fs 0001 = -27.0dB fs … (1.5dB steps) 1110 = -7.5dB fs 1111 = -6dB fs
R16 (10h) ALC Control 2	7	RSVD	RW	0	
	6:4	MINGAIN	RW	000	Sets the minimum gain of the PGA 000 = -17.25db 001 = -11.25 ... 110 = +18.75dB 111 = +24.75db where each value represents a 6dB step.
	3:0	HLD [3:0]	RW	0000 (0ms)	ALC hold time before gain is increased. 0000 = 0ms 0001 = 2.67ms 0010 = 5.33ms … (time doubles with every step) 1111 = 43.691s
R17 (11h) ALC Control 3	7:4	DCY [3:0]	RW	0011 (192ms)	ALC decay (gain ramp-up) time 0000 = 24ms 0001 = 48ms 0010 = 96ms … (time doubles with every step) 1010 or higher = 24.58s
	3:0	ATK [3:0]	RW	0010 (24ms)	ALC attack (gain ramp-down) time 0000 = 6ms 0001 = 12ms 0010 = 24ms … (time doubles with every step) 1010 or higher = 6.14s

Table 64. ALC Control Registers

©2011 INTEGRATED DEVICE TECHNOLOGY, INC.

4.7.3. Peak Limiter

To prevent clipping, the ALC circuit also includes a limiter function. If the ADC input signal exceeds 87.5% of full scale (–1.16dB), the PGA gain is ramped down at the maximum attack rate, until the signal level falls below 87.5% of full scale. This function is automatically enabled whenever the ALC is enabled.

4.7.4. Input Threshold

To avoid hissing during quiet periods, the ACS422x00 has an input threshold noise gate function that compares the signal level at the inputs to a noise gate threshold. Below the threshold, the programmable gain can be held , or the ADC output can be muted. The threshold can be adjusted in increments of 1.5dB.

The noise gate activates when the signal-level at the input pin is less than the Noise Gate Threshold (NGTH) setting.

The ADC output can be muted. Alternatively, the PGA gain can be held .

The threshold is adjusted in 1.5dB steps. The noise gate only works in conjunction with the ALC, and always operates on the same channel(s) as the ALC.

4.7.4.1. Noise Gate Control Register

Register Address	Bit	Label	Type	Default	Description
R12 (12h) Noise Gate Control (NGATE)	7:3	NGTH [4:0]	RW	00000	Noise gate threshold (compared to ADC full-scale range) 00000 -76.5dBfs 00001 -75dBfs … 1.5 dB steps 11110 -31.5dBfs 11111 -30dBfs
	2:1	NGG [1:0]	RW	00	Noise gate type X0 = PGA gain held 01 = mute ADC output 11 = reserved (do not use this setting)
	0	NGAT	RW	0	Noise gate function enable 1 = enable 0 = disable

Table 65. NGATE Register

4.8. Digital Microphone Support

Line Input 3 may be an analog line (mic) or digital microphone input depending on the part option.

The digital microphone interface permits connection of a digital microphone(s) to the CODEC via the DMIC_DAT, and DMIC_CLK 2-pin interface. DMIC_DAT is an input that carries individual channels of digital microphone data to the ADC. In the event that a single microphone is used, the data is ported to both ADC channels. This mode is selected using a control bit and the left time slot is copied to the ADC left and right inputs.

The DMIC_CLK output is synchronous to the internal master (DSP) clock and is adjustable in 4 steps. Each step provides a clock that is a multiple of the chosen ADC base rate and modulator rate.The default frequency is 320/3 times the ADC base rate for 32KHz, and 80 times the base rate for 44.1KHz and 48KHz base rates.

©2011 INTEGRATED DEVICE TECHNOLOGY, INC.

SDM Rate	DMRate [1:0]	Base Rate	DSPCLK	DMIC_CLK divisor	DMIC_CLK
Full	00	32 KHz	40.960 MHz	12	3.413333 MHz
		44.1 KHz	56.448 MHz	16	3.528 MHz
		48 KHz	61.440 MHz	16	3.84 MHz
	01	32 KHz	40.960 MHz	16	2.56 Mhz
		44.1 KHz	56.448 MHz	20	2.8224 MHz
		48 KHz	61.440 MHz	20	3.072 MHz
	10	32 KHz	40.960 MHz	20	2.048 Mhz
		44.1 KHz	56.448 MHz	24	2.352 MHz
		48 KHz	61.440 MHz	24	2.56 MHz
	11	32 KHz	40.960 MHz	24	1.706667 Mhz
		44.1 KHz	56.448 MHz	32	1.764 MHz
		48 KHz	61.440 MHz	32	1.92 MHz
Half	00	32 KHz	40.960 MHz	16	2.56 MHz
		44.1 KHz	56.448 MHz	16	3.528 MHz
		48 KHz	61.440 MHz	16	3.84 MHz
	01	32 KHz	40.960 MHz	24	1.706667 MHz
		44.1 KHz	56.448 MHz	24	2.352 MHz
		48 KHz	61.440 MHz	24	2.56 MHz
	10	32 KHz	40.960 MHz	32	1.28 MHz
		44.1 KHz	56.448 MHz	32	1.764 MHz
		48 KHz	61.440 MHz	32	1.92 MHz
	11	32 KHz	40.960 MHz	40	1.024 MHz
		44.1 KHz	56.448 MHz	40	1.4112 MHz
		48 KHz	61.440 MHz	40	1.536 MHz

Table 66. DMIC Clock

The two DMIC data inputs are shown connected to the ADCs through the same multiplexors as the analog ports. Although the internal implementation is different between the analog ports and the digital microphones, the functionality is the same. In most cases, the default values for the DMIC clock rate and data sample phase will be appropriate and an audio driver will be able to configure and use the digital microphones exactly like an analog microphone.

If the ADC path is powered down, the DMIC_CLK output will be driven low to place the DMIC element into a low power state. (Many digital microphones will enter a low power state if the clock input is held at a DC level or toggled at a slow rate.)

©2011 INTEGRATED DEVICE TECHNOLOGY, INC.

The codec supports the following digital microphone configurations:

Digital Mics	Data Sample	Notes
0	N/A	No Digital Microphones
1	Single Edge	When using a microphone that supports multiplexed operation (2-mics can share a common data line), configure the microphone for “Left” and select mono operation. “Left” D-mic data is used for ADC left and right channels.
2	Double Edge	External logic required to support sampling on a single Digital Mic pin channel on rising edge and second Digital Mic right channel on falling edge of DMIC_CLK for those digital microphones that don’t support alternative clock edge (multiplexed output) capability.

Table 67. Valid Digital Mic Configurations

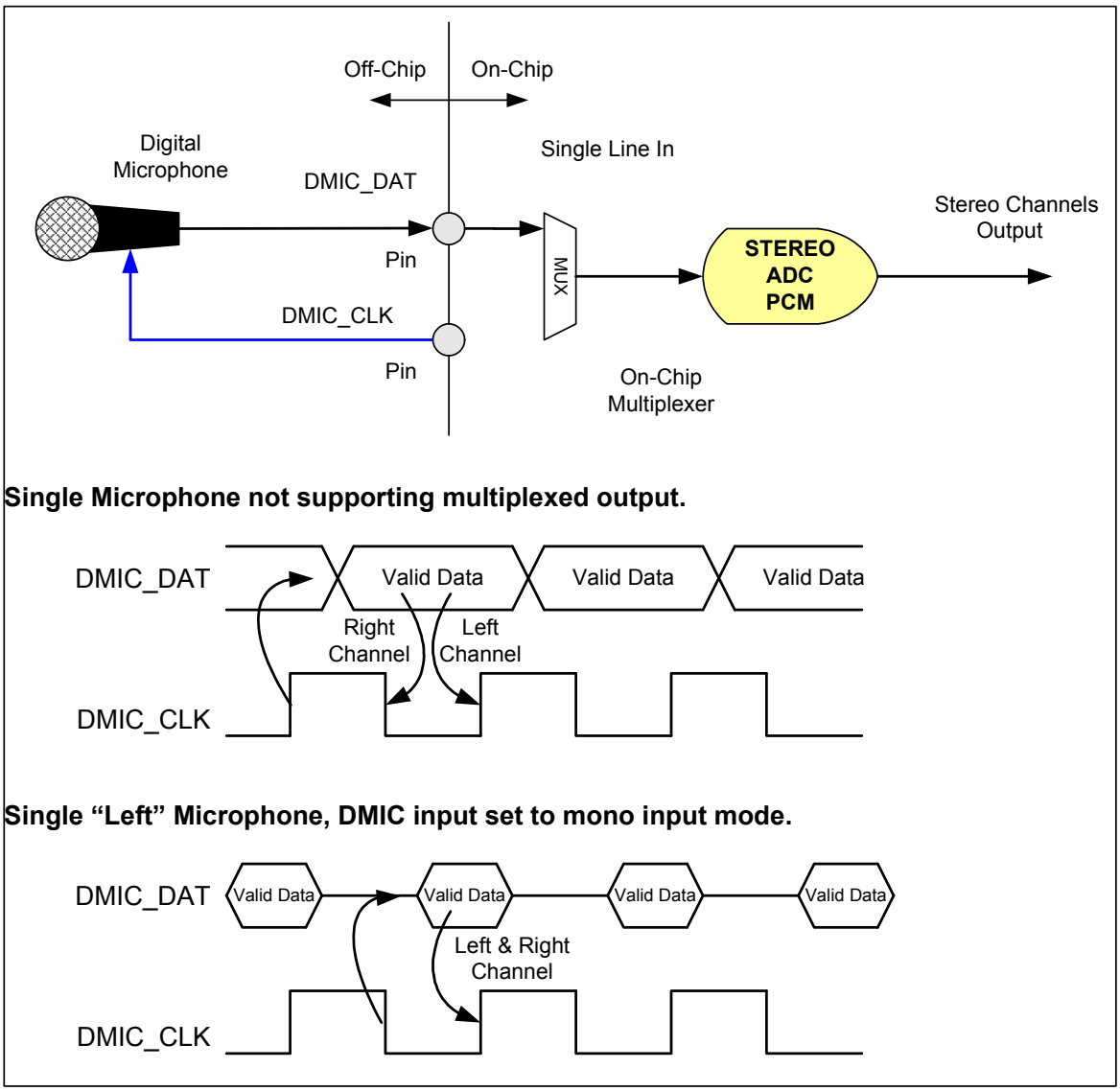

Figure 21. Single Digital Microphone (data is ported to both left and right channels)

©2011 INTEGRATED DEVICE TECHNOLOGY, INC.

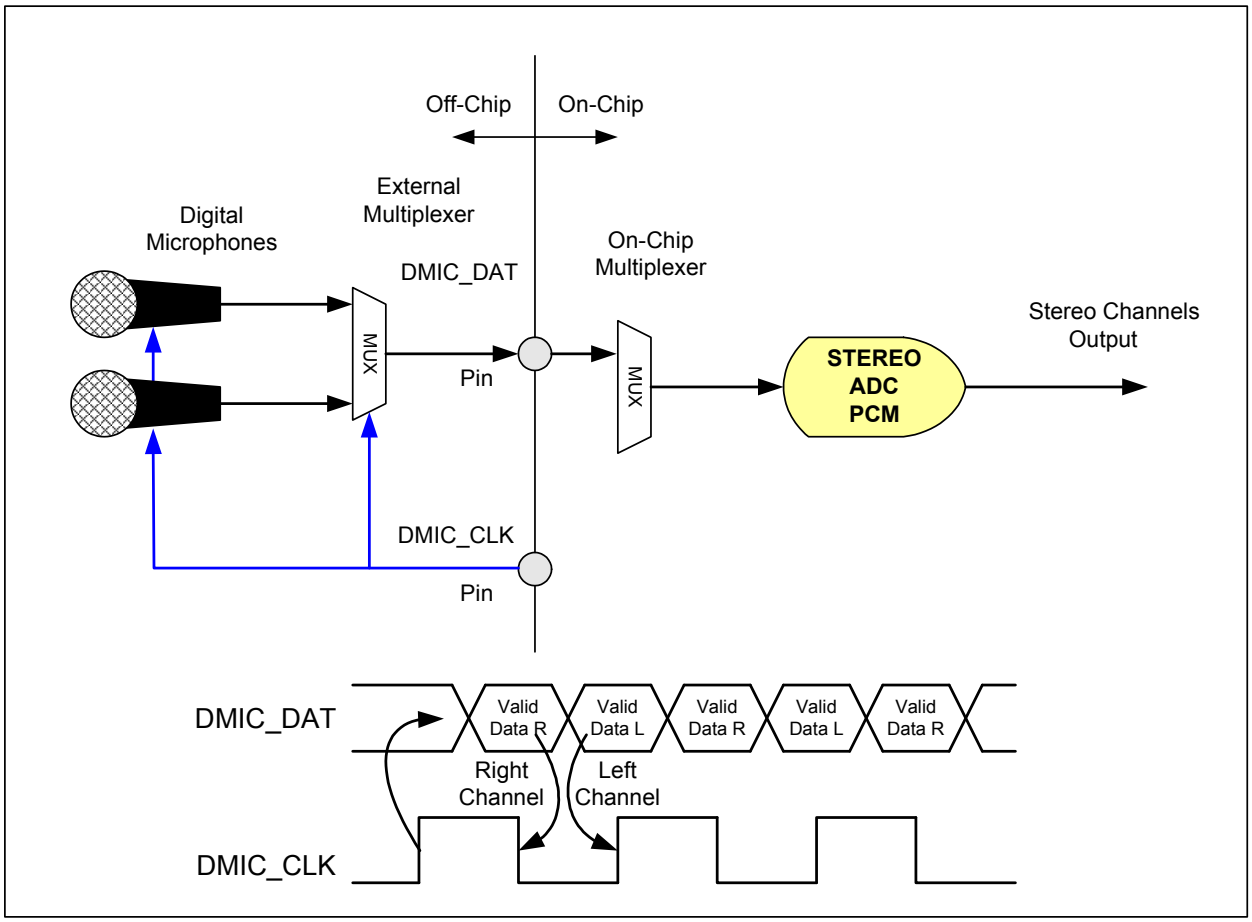

Figure 22. Stereo Digital Microphone Configuration

4.8.1. DMIC Register

Register Address	Bit	Label	Type	Default	Description
R36 (24h) D-Mic Control (DMICCTL)	7	DMicEn	RW	0	Digital Microphone Enable 0 = DMIC interface is disabled (DMIC_CLK low, DMIC muted) 1 = DMIC interface is enabled
	6:5	RSVD	R	00	Reserved
	4	DMono	RW	0	0 = stereo operation, 1 = mono operation (left channel duplicated on right)
	3:2	DMPhAdj[1:0]	RW	00	Selects when the D-Mic data is latched relative to the DMIC_CLK. 00 = Left data rising edge / right data falling edge 01 = Left data center of high / right data center of low 10 = Left data falling edge / right data rising edge 11 = Left data center of low / right data center of high
	1:0	DMRate[1:0]	RW	00	Selects the DMIC clock rate: See table in text

Table 68. DMICCTL Register

©2011 INTEGRATED DEVICE TECHNOLOGY, INC.

5. DIGITAL AUDIO AND CONTROL INTERFACES

5.1. Data Interface

For digital audio data, the ACS422x00 uses five pins to input and output digital audio data.

- ADCDOUT: ADC data output
- ADCLRCK: ADC data alignment clock
- ADCBCLK: Bit clock, for synchronization
- DACDIN: DAC data input
- DACLRCK: DAC data alignment clock
- DACBCLK: Bit clock, for synchronization

The clock signals ADCBCLK, ADCLRCK, DACBCLK, and DACLRCK are outputs when the ACS422x00 operates as a master; they are inputs when it is a slave. Three different data formats are supported:

- Left justified
- Right justified
- I^2S

All of these modes are MSB first.

5.2. Master and Slave Mode Operation

The ACS422x00 can be used as either a master or slave device, selected by the MS Bit. When operating as a master, the ACS422x00 generates ADCBCLK, ADCLRCLK, DACBCLK and DACLRCLK and controls sequencing of the data transfer the data pins. In slave mode, the ACS422x00 provides data aligned to clocks it receives.

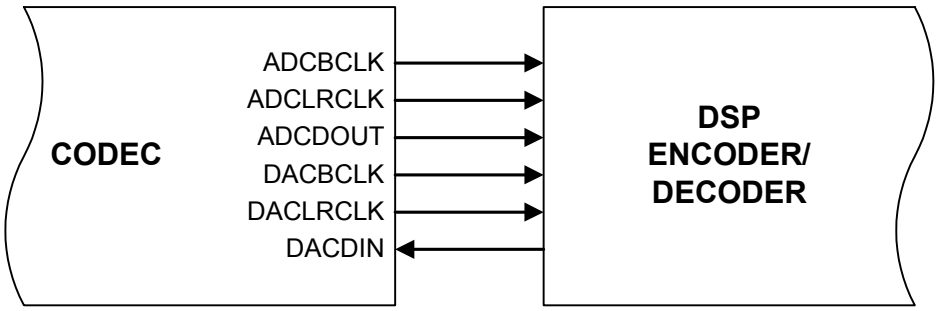

Figure 23. Master mode

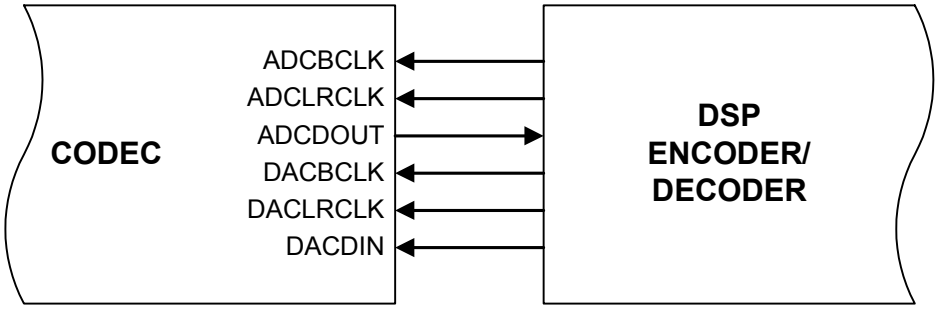

Figure 24. Slave mode

©2011 INTEGRATED DEVICE TECHNOLOGY, INC.

5.3. Audio Data Formats

The ACS422x00 supports 3 common audio interface formats and programmable clocking that provides broad compatibility with DSPs, Consumer Audio and Video SOCs, FPGAs, handset chipsets, and many other products.

In all modes, depending on word length, BCLK frequency and sample rate, there may be unused BCLK cycles before each LRCLK transition. If the converter word length is smaller than the number of clocks per sample in the frame then the DAC will ignore (truncate) the extra bits while the ADC will zero pad the output data. If the converter word length chosen is larger than the number of clocks available per sample in the frame, the ADC data will be truncated to fit the frame and the DAC data will be zero padded.

5.4. Left Justified Audio Interface

In Left Justified mode, the MSB is available on the first rising edge of BCLK following a LRCLK transition. The other bits are then transmitted in order. The LRCLK signal is high when left channel data is present and low when right channel data is present.

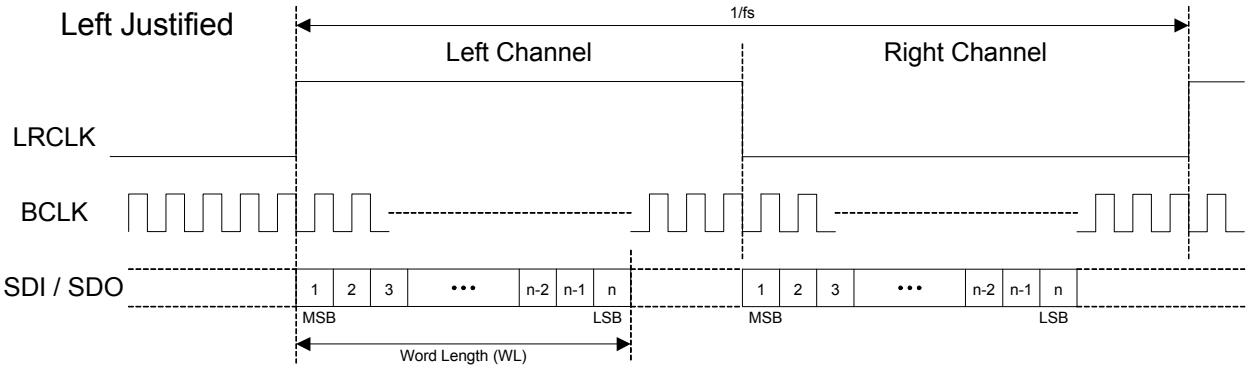

Figure 25. Left Justified Audio Interface (assuming n-bit word length)

5.5. Right Justified Audio Interface (assuming n-bit word length)

In Right Justified mode, the LSB is available on the last rising edge of BCLK before a LRCLK transition. All other bits are transmitted in order. The LRCLK signal is high when left channel data is present and low when right channel data is present.

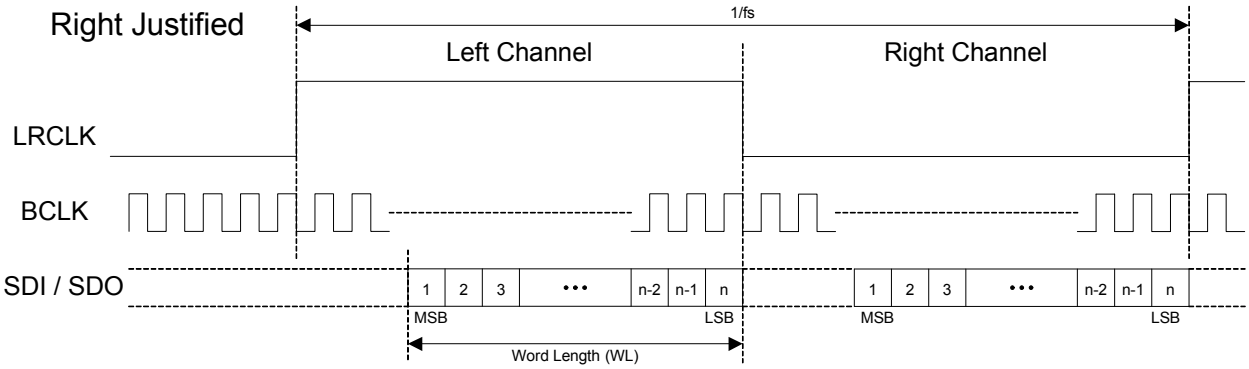

Figure 26. Right Justified Audio Interface (assuming n-bit word length)

©2011 INTEGRATED DEVICE TECHNOLOGY, INC.

5.6. I²S Format Audio Interface

In I²S mode, the MSB is available on the second rising edge of BCLK following a LRCLK transition. The other bits up to the LSB are then transmitted in order.

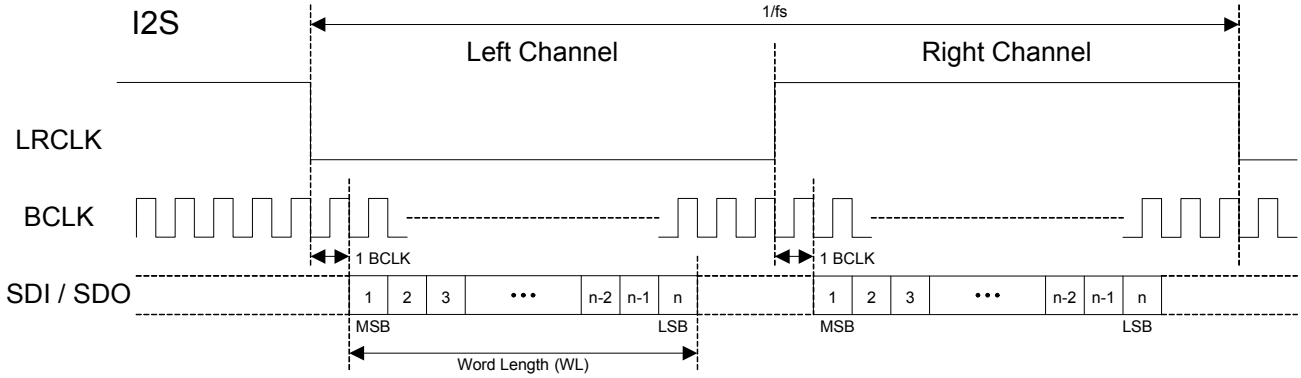

Figure 27. I²S Justified Audio Interface (assuming n-bit word length)

5.7. Data Interface Registers

5.7.1. Audio Data Format Control Register

Register Address	Bit	Label	Type	Default	Description
R19 (13h) Digital Audio Interface Format (AIC1)	7	RSVD	R	0	Reserved
	6	BCLKINV	RW	0	BCLK invert bit (for master and slave modes) 0 = BCLK not inverted 1 = BCLK inverted
	5	MS	RW	0	Master / Slave Mode Control 1 = Enable Master Mode 0 = Enable Slave Mode
	4	LRP	RW	0	Right, left and I²S modes – LRCLK polarity 1 = invert LRCLK polarity 0 = normal LRCLK polarity
	3:2	WL[1:0]	RW	10	Audio Data Word Length 11 = 32 bits 10 = 24 bits 01 = 20 bits 00 = 16 bits
	1:0	FORMAT[1:0]	RW	10	Audio Data Format Select 11 = Reserved 10 = I²S Format 01 = Left justified 00 = Right justified

Table 69. AIC1 Register

©2011 INTEGRATED DEVICE TECHNOLOGY, INC.

5.7.2. Audio Interface Output Tri-state

TRI is used to tri-state the ADCDOUT, ADCLRCK, DACLRCK, ADCBCLK, and DACBCLK pins. In Slave mode (MASTER=0) only ADCDOUT will be tri-stated since the other pins are configured as inputs. The Tri-stated pins are pulled low with an internal pull-down resistor unless that resistor is disabled.

Register Address	Bit	Label	Type	Default	Description
R20 (14h) Audio Interface Control 2 (AIC2)	7:6	DACDSEL[1:0]	RW	00	00: left DAC = left I2S data; right DAC = right I2S data 01: left DAC = left I2S data; right DAC = left I2S data 10: left DAC = right I2S data; right DAC = right I2S data 11: left DAC = right I2S data; right DAC = left I2S data
	5:4	ADCDSEL[1:0]	RW	00	00: left I2S data = left ADC; right I2S data = right ADC 01: left I2S data = left ADC; right I2S data = left ADC 10: left I2S data = right ADC; right I2S data = right ADC 11: left I2S data = right ADC; right I2S data = left ADC
	3	TRI	RW	0	Tri-states ADCDOUT, ADCLRCLK, DACLRCLK, ADCBCLK, and DACBCLK pins. 0 = ADCDOUT is an output, ADCLRCK, DACLRCLK, ADCBCLK, and DACBCLK are inputs (slave mode) or outputs (master mode) 1 = ADCDOUT, ADCLRCK, DACLRCLK, ADCBCLK, and DACBCLK are high impedance
	2:0	BLRCM[2:0]	RW	000	Bitclock and LRClock mode. See Table Below

Table 70. AIC2 Register

5.7.3. Audio Interface Bit Clock and LR Clock configuration

Although the DAC and ADC interfaces implement separate Bit Clock and LR Clock pins, it is also possible to share one or both of the clocks.

the following restrictions must be observed when the BCLK from one path (DAC or ADC) is combined with the LRCLK from the other path (ADC or DAC) as described by the Bit Clock and LR Clock Mode Selection table below:

1. Both the DAC and ADC must be programmed for the same sample rate
2. Both the DAC and ADC must be programmed for the same number of clocks per frame
3. When in slave mode, the DAC and ADC data must be aligned relative to the provided BCLK and LRCLK (this is guaranteed in master mode)
4. The DAC and ADC must be powered down when changing the BLRCM mode
5. If sharing the BCLK from one path (DAC or ADC) and the LRCLK from the other path (ADC or DAC), shut down both the DAC and ADC before programming the sample rate and clocks per frame for either. (Again, both must match.)

©2011 INTEGRATED DEVICE TECHNOLOGY, INC.

5.7.4. Bit Clock and LR Clock Mode Selection

MS	BLRCM [2:0]	MODE[1]	DAC BCLK	ADC BCLK	DAC LRCLK	ADC LRCLK
0	000	Independent	Input for playback path	input for record path	Input for playback path	input for record path
0	001	Independent	Input for playback path	input for record path	Input for playback path	input for record path
0	010	Shared BCLK (DAC)	Input for playback and record	unused	Input for playback path	input for record path
0	011	Shared BCLK & LRCLK (DAC)	Input for playback and record	unused	Input for playback and record	unused
0	100	Shared BCLK (DAC) & LRCLK (ADC)	Input for playback and record	unused	unused	Input for playback and record
0	101	Shared BCLK (ADC)	unused	Input for playback and record	Input for playback path	input for record path
0	110	Shared BCLK (ADC) & LRCLK (DAC)	unused	Input for playback and record	Input for playback and record	unused
0	111	Shared BCLK & LRCLK (ADC)	unused	Input for playback and record	unused	Input for playback and record
1	000	Independent (off if converter off)	Output for playback path (off when DACs off)[2]	Output for record path (Off when ADC off)[3]	Output for playback path (off when DACs off)	Output for record path (off when ADCs off)
1	001	Independent (off if all converters off)	Output for playback path (off when DACs and ADCs off)	Output for record path (off when DACs and ADCs off)	Output for playback path (off when DACs and ADCs off)	Output for record path (off when DACs and ADCs off)
1	010	Shared BCLK (DAC)	Output for playback and record (stays on if either DAC or ADC on)	unused (off)	Output for playback path (Off if DAC is off)	Output for record path (off when ADCs off)
1	011	Shared BCLK & LRCLK (DAC)	Output for playback and record (stays on if either DAC or ADC on)	unused (off)	Output for playback and record (stays on if either DAC or ADC on)	unused (off)
1	100	Shared BCLK(DAC)& LRCLK(ADC)	Output for playback and record (stays on if either DAC or ADC on)	unused (off)	unused (off)	Output for playback and record (stays on if either DAC or ADC on)
1	101	Shared BCLK (ADC)	unused (off)	Output for playback and record (stays on if either DAC or ADC on)	Output for playback path (Off if DAC is off)	Output for record path (off when ADCs off)
1	110	Shared BCLK(ADC)& LRCLK(DAC)	unused (off)	Output for playback and record (stays on if either DAC or ADC on)	Output for playback and record (stays on if either DAC or ADC on)	unused (off)
1	111	Shared BCLK & LRCLK(ADC)	unused (off)	Output for playback and record (stays on if either DAC or ADC on)	unused (off)	Output for playback and record (stays on if either DAC or ADC on)

Table 71. Bit Clock and LR Clock Mode Selection

1. When sharing both the BCLK and LRCLK between the DAC and ADC interfaces, both the DAC and ADC must be programmed for the same rate, the same number of clocks per frame, and data must be aligned the same with respect to LRCLK. Disable all converters before changing modes.
2. DAC (playback path) is off when HPL, HPR, SPKL, and SPKR power states are off.

©2011 INTEGRATED DEVICE TECHNOLOGY, INC.

3.ADC (record path) is off when ADCL, and ADCR power states are off (PGA, D2S, Boost power states are not considered.)

5.7.5. ADC Output Pin State

Tri-state (TRI)	Record Path Power State	ADC Data Out Pull-down (ADOPDD)	ADC Data Out State
0	Off	0	Off, pulled-low
	Off	1	Off, floating
	On	NA	Active
1	NA	0	Off, pulled-low
	NA	1	Off, floating

Table 72. ADC Data Output pin state

5.7.6. Audio Interface Control 3 Register

Register Address	Bit	Label	Type	Default	Description
R21 (15h) Audio Interface Control 3 (AIC3)	7:6	RSVD	R	0	Reserved
	5	ADOPDD	RW	0	ADCDOUT Pull-Down Disable 0 = Pull-Down active when tri-stated or the ADC path is powered down. 1 = Pull-Down always disabled
	4	ALRPDD	RW	0	ADCLRCLK Pull-Down Disable 0 = Pull-Down active when configured as input 1 = Pull-Down always disabled
	3	ABCPDD	RW	0	ADCBCLK Pull-Down Disable 0 = Pull-Down active when configured as input 1 = Pull-Down always disabled
	2	DDIPDD	RW	0	DACDIN Pull-Down Disable 0 = Pull-Down active 1 = Pull-Down always disabled
	1	DLRPDD	RW	0	DACLRCLK Pull-Down Disable 0 = Pull-Down active when configured as input 1 = Pull-Down always disabled
	0	DBCPDD	RW	0	DACBCLK Pull-Down Disable 0 = Pull-Down active when configured as input 1 = Pull-Down always disabled

Table 73. AIC3 Register

5.8. Bit Clock Mode

The default master mode bit clock generator automatically produces a bit clock frequency based on the sample rate and word length. When enabled by setting the appropriate BCM bits, the bit clock mode (BCM) function overrides the default master mode bit clock generator to produce the bit clock frequency shown below: Note that selecting a word length of 24-bits in Auto mode generates 64 clocks per frame (64fs)

©2011 INTEGRATED DEVICE TECHNOLOGY, INC.

.

Register Address	Bit	Label	Type	Default	Description
R23/R25 (17h/19h ADC/DAC Sample Rate Control	7:6	ABCM[1:0] DBCM[1:0]	RW	00	BCLK Frequency 00 = Auto 01 = 32 x fs 10 = 40 x fs 11 = 64 x fs

Table 74. Master Mode BCLK Frequency Control Register

The BCM mode bit clock generator produces 16, 20, or 32 bit cycles per sample.

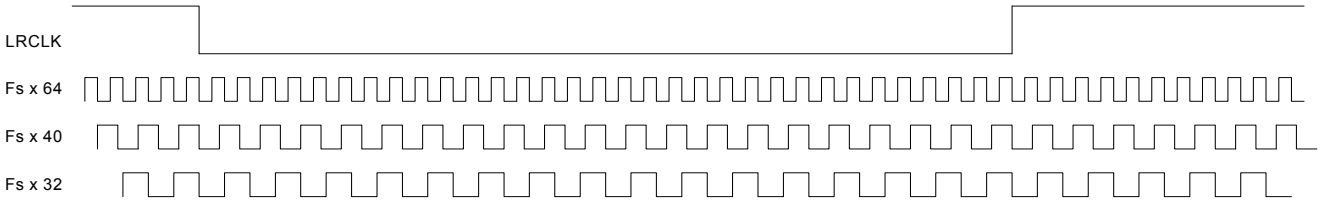

Figure 28. Bit Clock mode

Note: The clock cycles are evenly distributed throughout the frame (true multiple of LRCLK not a gated clock.)

5.9. Control Interface

The registers are accessed through a serial control interface using a multi-word protocol comprised of 8-bit words. The first 8 bits provide the device address and Read/Write flag. In a write cycle, the next 8 bits provide the register address; all subsequent words contain the data, corresponding to the 8 bits in each control register.The control interface operates using a standard 2-wire interface, as a slave device only.

5.9.1. Register Write Cycle

The controller indicates the start of data transfer with a high to low transition on SDA while SCL remains high, signalling that a device address and data will follow. All devices on the 2-wire bus respond to the start condition and shift in the next eight bits on SDIN (7-bit address + Read/Write bit, MSB first). If the device address received matches the address of the ACS422x00 and the R/W bit is ‘0’, indicating a write, then the ACS422x00 responds by pulling SDA low on the next clock pulse (ACK); otherwise, the ACS422x00 returns to the idle condition to wait for a new start condition and valid address.

Once the ACS422x00 has acknowledged a correct device address, the controller sends the ACS422x00 register address. The ACS422x00 acknowledges the register address by pulling SDA low for one clock pulse (ACK). The controller then sends a byte of data (B7 to B0), and the ACS422x00 acknowledges again by pulling SDA low.

When there is a low to high transition on SDA while SCL is high, the transfer is complete. After receiving a complete address and data sequence the ACS422x00 returns to the idle state. If a start or stop condition is detected out of sequence, the device returns to the idle condition.

©2011 INTEGRATED DEVICE TECHNOLOGY, INC.

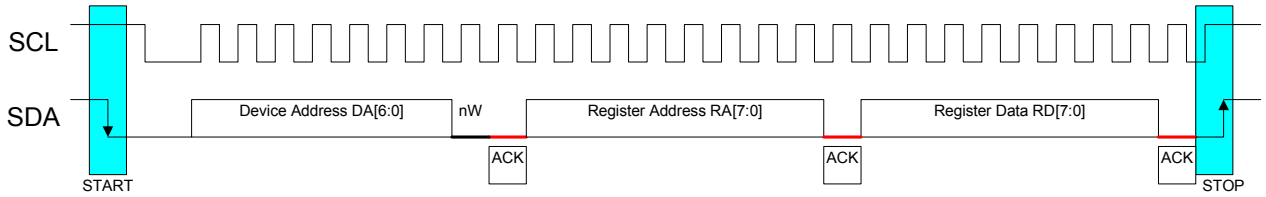

Figure 29. 2-Wire Serial Control Interface

The ACS422x00 has device address D2.

5.9.2. Multiple Write Cycle

The controller may write more than one register within a single write cycle. To write additional registers, the controller will not generate a stop or start (repeated start) command after receiving the acknowledge for the second byte of information (register address and data). Instead the controller will continue to send bytes of data. After each byte of data is received, the register address is incremented.

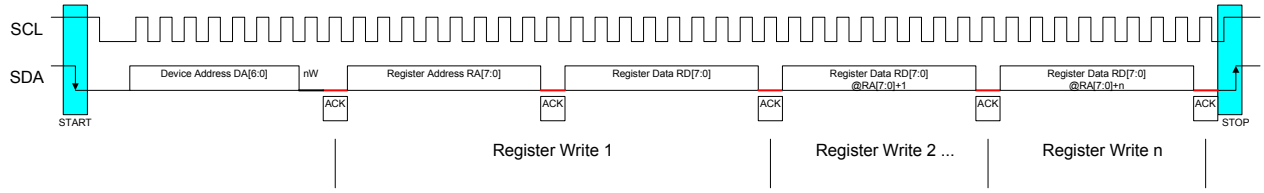

Figure 30. Multiple Write Cycle

5.9.3. Register Read Cycle

The controller indicates the start of data transfer with a high to low transition on SDA while SCL remains high, signalling that a device address and data will follow. If the device address received matches the address of the ACS422x00 and the R/W bit is ‘0’, indicating a write, then the ACS422x00 responds by pulling SDA low on the next clock pulse (ACK); otherwise, the ACS422x00 returns to the idle condition to wait for a new start condition and valid address.

Once the ACS422x00 has acknowledged a correct address, the controller sends a restart command (high to low transition on SDA while SCL remains high). The controller then re-sends the devices address with the R/W bit set to ‘1’ to indicate a read cycle.The ACS422x00 acknowledges by pulling SDA low for one clock pulse. The controller then receives a byte of register data (B7 to B0).

For a single byte transfer, the host controller will not acknowledge (high on data line) the data byte and generate a low to high transition on SDA while SCL is high, completing the transfer. If a start or stop condition is detected out of sequence, the device returns to the idle condition.

©2011 INTEGRATED DEVICE TECHNOLOGY, INC.

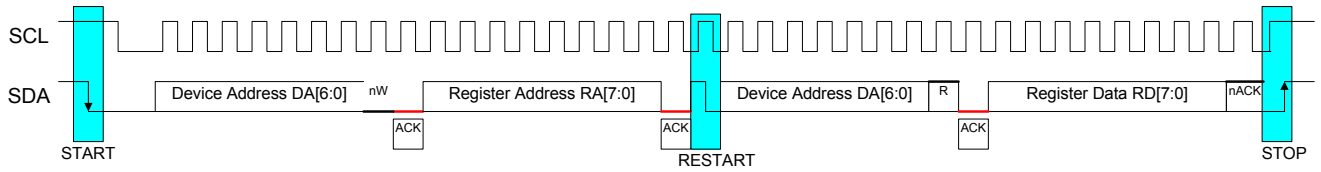

Figure 31. Read Cycle

The ACS422x00 has device address D2.

5.9.4. Multiple Read Cycle

The controller may read more than one register within a single read cycle. To read additional registers, the controller will not generate a stop or start (repeated start) command after sending the acknowledge for the byte of data. Instead the controller will continue to provide clocks and acknowledge after each byte of received data. The codec will automatically increment the internal register address after each register has had its data successfully read (ACK from host) but will not increment the register address if the data is not received correctly by the host (nACK from host) or if the bus cycle is terminated unexpectedly (however the EQ/Filter address will be incremented even if the register address is not incremented when performing EQ/Filter RAM reads). By automatically incrementing the internal register address after each byte is read, all the internal registers of the codec may be read in a single read cycle.

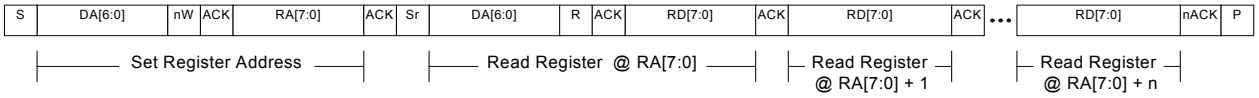

Figure 32. Multiple Read Cycle

5.9.5. Device Addressing and Identification

The ACS422x00 has a default slave address of D2. However, it is sometimes necessary to use a different address. The ACS422x00 has a device address register for this purpose. The part itself has an 8-bit Identification register and an 8-bit revision register that provide device specific information for software. In addition, an 8-bit programmable subsystem ID register can allow firmware to provide a descriptive code to higher level software such as an operating system driver or application software.

5.9.5.1. Device Registers

- **Device Address Register**

Register Address	Bit	Label	Type	Default	Description
R124 (7Ch) DEVADR	7:1	ADDR[7:1]	RW	1101001	7-bit slave address
	0	RSVD	R	0	Not used - this bit is the R/nW bit in the 2-wire protocol.

Table 75. DEVADRI Register

©2011 INTEGRATED DEVICE TECHNOLOGY, INC.

- **Device Identification Registers**

Register Address	Bit	Label	Type	Default	Description
R126 (7Eh) DEVIDH	7:0	DID[15:8]	R	xxh	16-bit device identification number. The ACS422x00 has programmable clocking that will drive different device IDs for each configuration. Contact IDT.
R125 (7Dh) DEVIDL	7:0	DID[7:0]	R	xxh	

Table 76. DEVID H&L Registers

- **Device Revision Register**

Register Address	Bit	Label	Type	Default	Description
R127 (7Fh) REVID	7:4	MAJ[3:0]	R	xh	4-bit major revision number. Contact IDT.
	3:0	MNR[3:0]	R	xh	4-bit minor revision number. Contact IDT.

Table 77. REVID Register

Note: Contact IDT for device and revision information.

5.9.5.2. Register Reset

The ACS422x00 registers may be reset to their default values using the reset register. Writing a special, non-zero value to this register causes all other registers to assume their default states. Device status bits will not necessarily change their values depending on the state of the device.

Register Address	Bit	Label	Type	Default	Description
R128 (80h) RESET	7:0	Reset[7:0]	RW	00h	Reset register Writing a value of 85h will cause registers to assume their default values. Reading this register returns 00h

Table 78. RESET Register

©2011 INTEGRATED DEVICE TECHNOLOGY, INC.

6. AUDIO CLOCK GENERATION

6.1. Internal Clock Generation (ACLK)

In addition to providing external clocks, the PLL block will also provide two clocks for the audio portion of the device. They are

- 122.880 MHz (2560 x 48 KHz)
- 112.896 (2560 x 44.1 KHz)

It is important that the crystal oscillator and needed PLLs remain on until all audio functions, including jack detection, are disabled.

6.2. ACLK Clocking and Sample Rates

The ACS422x00 utilizes internal PLLs to generate the audio master clock (ACLK) at 56.448MHz (22.5792MHz *2.5) and 61.44MHz (24.576 *2.5). It then generates audio sample rates directly from the master clock. The ADC and DAC do not need to run at the same sample rate unless they are sharing BCLK and LRCLK pins. Disable the appropriate converters before programming the mode or rate, especially if the DAC and ADC are programmed to share the same BCLK and LRCLK. After changing rate, a delay of up to 5mS may be needed for the part to properly lock PLLs, flush filters, etc.

Register Address	Bit	Label	Type	Default	Description
R23 (17h) ADC Sample Rate Control (ADCSR)	7:6	ABCM[1:0]	RW	00	ADC Bit Clock Mode (for data interface ADCBCLK generation in master mode) 00 = Auto 01 = 32x fs 10 = 40x fs 11 = 64x fs
	5	RSVD	R	0	Reserved
	4:3	ABR[1:0]	RW	10	ADC Base Rate 00 = 32KHz 01 = 44.1KHz 10 = 48KHz 11 = Reserved
	2:0	ABM[2:0]	RW	010	ADC Base Rate Multiplier 000 = 0.25x 001 = 0.50x 010 = 1x 011 = 2x 100-111 = Reserved

Table 79. ADCSR Register

©2011 INTEGRATED DEVICE TECHNOLOGY, INC.

Register Address	Bit	Label	Type	Default	Description
R25 (19h) DAC Sample Rate Control (DACSR)	7:6	DBCM[1:0]	RW	00	DAC Bit Clock Mode (for data interface DACBCLK generation in master mode) 00 = Auto 01 = 32x fs 10 = 40x fs 11 = 64x fs
	5	RSVD	R	0	Reserved
	4:3	DBR[1:0]	RW	10	DAC Base Rate 00 = 32KHz 01 = 44.1KHz 10 = 48KHz 11 = Reserved
	2:0	DBM[2:0]	RW	010	DAC Base Rate Multiplier 000 = 0.25x 001 = 0.50x 010 = 1x 011 = 2x 100-111 = Reserved

Table 80. DACSR Register

The clocking of the ACS422x00 is controlled using the BR[1:0] and BM[2:0] control bits. Each value of BR[1:0] + BM[2:0]selects one combination of ACLK division ratios and hence one combination of sample rates

The BR[1:0] and BM[2:0] bits must be set to configure the appropriate ADC and DAC sample rates in both master and slave mode.

BR [1:0]	BM [2:0]	ACLK	SAMPLE RATE
00	000	40.96 MHz	8 kHz (MCLK/5120)
	001		16 kHz (MCLK/2560)
	010		32 kHz (MCLK/1280)
	011		Reserved
	100-111		Reserved
01	000	56.448MHz	11.025 kHz (MCLK/5120)
	001		22.05 kHz (MCLK/2560)
	010		44.1 kHz (MCLK/1280)
	011		88.2 kHz (MCLK/640)
	100-111		Reserved
10	000	61.44 MHz	12 kHz (MCLK/5120)
	001		24 kHz (MCLK/2560)
	010		48 kHz (MCLK/1280)
	011		96 kHz (MCLK/640)
	100-111		Reserved
11	000-111	-	Reserved

Table 81. ACLK and Sample Rates

6.3. DAC/ADC Modulator Rate Control

The power consumption and audio quality may be adjusted by changing the converter modulator rate. By default the

©2011 INTEGRATED DEVICE TECHNOLOGY, INC.

DAC and ADC Sigma-Delta modulators run at a high rate for the best audio quality. The modulator rates for the converters may be forced to run at half their nominal rate to conserve power. A third option allows the modulator rate to automatically drop to half rate when low sampling rates are chosen (1/2 or 1/4 the base rate.) The DACs and ADCs are independently controlled.

Register Address	Bit	Label	Type	Default	Description
R31 (1Fh) CONFIG0	7:6	ASDM[1:0]	RW	10h	ADC Modulator Rate 00 = Reserved 01 = Half 10 = Full 11 = Auto
	5:4	DSDM[1:0]	RW	10h	DAC Modulator Rate 00 = Reserved 01 = Half 10 = Full 11 = Auto
	3:2	RSVD	R	0h	Reserved for future use.
	1	dc_bypass	RW	0	1 = bypass DC removal filter **(WARNING DC content can damage speakers)**
	0	sd_force_on	R	0	1 = supply detect forced on. 0 = supply detect on when needed (COP, UVLO enabled).

Table 82. CONFIG0 Register

DSDM[1:0] ASDM[1:0]	BM [2:0]	Modulator Rate
00	NA	Reserved
01	000 (1/4x)	Half
	001 (1/2x)	
	010 (1x)	
	011 (2x)	
10	000 (1/4x)	Full
	001 (1/2x)	
	010 (1x)	
	011 (2x)	
11	000 (1/4x)	Auto (Half)
	001 (1/2x)	Auto (Half)
	010 (1x)	Auto (Full)
	011 (2x)	Auto (Full)

Table 83. SDM Rates

©2011 INTEGRATED DEVICE TECHNOLOGY, INC.

7. PLL SECTION

The ACS422x00 has a factory programmable clock synthesizer that can generate up to 4 high-quality, high-frequency clock outputs including multiple reference clocks from a low frequency crystal or clock input. The ACS422x00 has 4 independent on-chip PLLs and is designed to replace crystals and crystal oscillators in most electronic systems.

Using phase-locked loop (PLL) techniques, the device runs from a standard fundamental mode, inexpensive crystal, or clock. It can replace multiple crystals and oscillators, saving boards space and cost.

Please contact an IDT Sales Representative with your clock requirements for factory programming.

7.1. PLL Block diagram

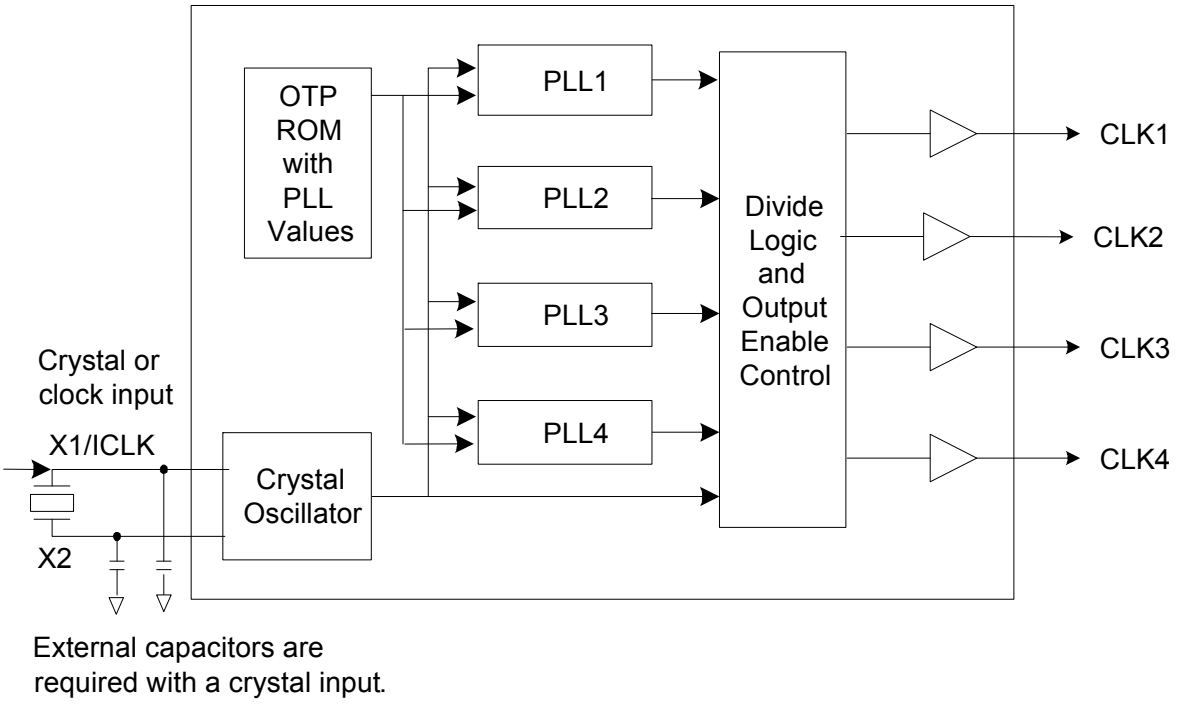

Figure 33. PLL Block Diagram

©2011 INTEGRATED DEVICE TECHNOLOGY, INC.

8. CHARACTERISTICS

8.1. Electrical Specifications

8.1.1. Absolute Maximum Ratings

Stresses above the ratings listed below can cause permanent damage to the ACS422x00. These ratings, which are standard values for IDT commercially rated parts, are stress ratings only. Functional operation of the device at these or any other conditions above those indicated in the operational sections of the specifications is not implied. Exposure to absolute maximum rating conditions for extended periods can affect product reliability. Electrical parameters are guaranteed only over the recommended operating temperature range.

Item	Maximum Rating
Voltage on any pin relative to Ground	Vss - 0.3V TO Vdd + 0.3V
Operating Temperature	0 ^{o}C TO 70 ^{o}C
Storage Temperature	-55 ^{o}C TO +125 ^{o}C
Soldering Temperature	260 ^{o}C
MICBias Output Current	3mA
Amplifier Maximum Supply Voltage	6 Volts = PVDD
Audio Maximum Supply Voltage	3 Volts = AVDD/CPVDD
Digital I/O Maximum Supply Voltage	3.6 Volts = DVDD_IO
Digital Core Maximum Supply Voltage	2.0 Volts = DVDD

Table 84. Electrical Specification: Maximum Ratings

8.1.2. Recommended Operating Conditions

Parameter		Min.	Typ.	Max.	Units
Power Supplies	DVDD_Core	1.4		2.0	V
	DVDD_IO	1.4		3.5	
	AVDD/CPVDD	1.7		2.0	
	PVDD	3.0		5.25	V
Ambient Operating Temperature	Analog - 5 V	0	25	70	^{o}C
Case Temperature	T_{case}			90	^{o}C

Table 85. Recommended Operating Conditions

ESD: The ACS422x00 is an ESD (electrostatic discharge) sensitive device. The human body and test equipment can accumulate and discharge electrostatic charges up to 4000 Volts without detection. Even though the ACS422x00 implements internal ESD protection circuitry, proper ESD precautions should be followed to avoid damaging the functionality or performance.

©2011 INTEGRATED DEVICE TECHNOLOGY, INC.

8.2. Device Characteristics

($T_{ambient}$ = 25 ºC, DVDD_CORE=DVDD_IO=AVDD=1.9V, PVDD=3.6V, 997Hz signal, fs=48KHz, Input Gain=0dB, 24-bit audio)

Parameter	Symbol	Test Conditions	Min	Typ	Max	Unit
Analog Inputs (L_{IN1}, L_{IN2}, L_{IN3}, R_{IN1}, R_{IN2}, R_{IN3})						
Full Scale Input Voltage	V_{FSIV}	$L/R_{IN1,2,3}$ Single Ended		0.5 -6		Vrms dBV
		$L/R_{IN1,2,3}$ Differential Mic		0.5 -6		Vrms dBV
Input Impedance				50		Kohm
Input Capacitance				10		pF
Analog Input Boost Amplifier						
Programmable Gain Min				0.0		dB
Programmable Gain Max				30.0		dB
Programmable Gain Step Size				10.0		dB
Analog Input PGA						
Programmable Gain Min				-17.25		dB
Programmable Gain Max				30.0		dB
Programmable Gain Step Size		Guaranteed Monotonic		0.75		dB
Digital Volume Control Amplifier						
Programmable Gain Min				-97		dB
Programmable Gain Max				30.0		dB
Programmable Gain Step Size		Guaranteed Monotonic		0.5		dB
Mute Attenuation				-999		dB
Analog Inputs (L_{IN1}/R_{IN1}, L_{IN2}/R_{IN2} Differential) to ADC						
Signal To Noise Ratio	SNR	A-weighted 20-20KHz		90		dB
Total Harmonic Distortion + Noise	THD+N	-1dBFS input		-80 0.01		dB %
Analog Inputs (L_{IN1}, L_{IN2}, L_{IN3}, R_{IN1}, R_{IN2}, R_{IN3} Single Ended) to ADC						
Signal To Noise Ratio	SNR	A-weighted 20-20KHz		90		dB
Total Harmonic Distortion + Noise	THD+N	-1dBFS input		-80 0.01		dB %
ADC channel Separation		997Hz full scale signal		70		dB
Channel Matching		997Hz signal			2	%
DAC to Line-Out (HPL, HPR with 10K / 50pF load)						
Signal to Noise Ratio[1]	SNR	A-weighted		102		dB
Total Harmonic Distortion +Noise[2]	THD+N	997Hz full scale signal		-84		dB
Channel Separation		997Hz full scale signal		70		dB
Mute attenuation				-999		dB
Headphone Outputs (HPL, HPR)						
Full Scale Output Level	V_{FSOV}	RL = 10Kohm		1.0		Vrms
		R_L = 16ohm		0.75		Vrms
Output Power	P_O	997Hz full scale signal, R_L = 16ohm		35		mW (ave)
Signal to Noise Ratio	SNR	A-weighted, R_L = 16ohm		102		dB

Table 86. Device Characteristics

©2011 INTEGRATED DEVICE TECHNOLOGY, INC.

Parameter	Symbol	Test Conditions	Min	Typ	Max	Unit
Total Harmonic Distortion +Noise	THD+N	R_L = 16ohms, -3dBFS		-76		dB
		R_L = 32ohms, -3dBFS		-78		dB
Speaker Outputs (L+, L-, R+, R- with 8ohms bridge-tied load)						
Full Scale Output Level	V_{FSOV}	PVDD=5V PVDD=3.6V		3.0 2.1		Vrms
Output Power	P_O	997Hz full scale signal, output power mode disabled PVDD=5V, 8ohm PVDD=3.6V, 8ohm	1 0.5			W(ave)
		PVDD = 5V, 4 ohm DIDD = 3.6V, 4 ohm	2 1			W(ave)
Signal to Noise Ratio	SNR	A-weighted		90		dB
Total Harmonic Distortion + Noise	THD+N	5V/8ohms/0.5W		0.05		%
Speaker Supply Leakage Current	I_{PVDD}			1		uA
Efficiency	h	PVDD=3.6V RL=8,P_O = 0.5W PVDD=5V RL=8,P_O = 1W PVDD=3.6V RL=4,P_O = 1W PVDD=5V RL=4,P_O = 2W		87 87 83 83		%
Analog Voltage Reference Levels						
Charge Pump Output	V-		-5%	-AVDD +100mV	+5%	V
Microphone Bias						
Bias Voltage	$V_{MICBIAS}$		-	2.5	-	V
BIAS current Source					3	mA
Power Supply Rejection Ratio	$PSRR_{MICBIAS}$	3.3V<PVDD<5.25V		80		dB
		3.0V<PVDD<3.3V		40		dB
Digital Input/Output						
ADC/DAC BCLK input rate	Fmax			30		MHz
I2S BCLK/LRCLK ratio			32		1022	clocks/ frame
Input High Level	V_{IH}		0.7x DVDD_ IO			V
Input LOW Level	V_{IL}				0.3x DVDD_IO	V
Output High Level	V_{OH}	I_{OH}=-1mA	0.9x DVDD_IO			V
Output LOW Level	V_{OL}	I_{OL}=1mA		0.1xDVDD_IO		V
Input Capacitance				5		pF
Input Leakage			-0.9		0.9	uA
ESD / Latchup						
IEC1000-4-2			1			Level
JESD22-A114-B			2			Class
JESD22-C101			4			Class

Table 86. Device Characteristics

1.Ratio of Full Scale signal to idle channel noise output is measured “A weighted” over a 20 Hz to a 20 kHz bandwidth. (AES17-1991 Idle Channel Noise or EIAJ CP-307 Signal-to-noise Ratio).

2.THD+N ratio as defined in AES17 and outlined in AES6id,non-weighted, swept over 20 Hz to 20 kHz bandwidth.

©2011 INTEGRATED DEVICE TECHNOLOGY, INC.

8.3. PLL Section DC Electrical Characteristics

Unless stated otherwise, DVDD_Core=1.8V -0.1V/+0.2V, Ambient Temp -10C to +80C

Parameter	Symbol	Test Conditions	Min	Typ	Max	Unit
Operating Voltage	DVDD_CORE		1.7	1.8	2.0	V
Supply Current	$I_{DVDD_CORE(PLL)}$	No Load, VDD=1.9V		11	15	mA
Input High Level	V_{IH}		0.7x DVDD_CORE			V
Input LOW Level	V_{IL}				0.3xDVDD_CORE	V
Output High Level	V_{OH}	I_{OH}=-2mA	0.8x DVDD_CORE			V
Output LOW Level	V_{OL}	I_{OL}=2mA			0.2xDVDD_CORE	V
Input Capacitance	C_{IN}			5		pF
Load Capacitance, X1 and X2	C_L		TBD	TBD	TBD	pF
Internal Pull-Down Resistor	R_{PD}	All clock outputs	75	250		kΩ
Internal Pull-Up Resistor	R_{PU}	All pins with pull-up or pull-down		50		kΩ

Table 87. PLL Section DC Characteristics

8.4. PLL Section AC Timing Specs

Unless stated otherwise, DVDD_Core=1.8V -0.1V/+0.2V, Ambient Temp -10C to +80C

Parameter	Symbol	Test Conditions	Min	Typ	Max	Unit
Input Frequency	f_{IN}		TBD	TBD	TBD	MHz
Output Rise Time	t_{OR}	20% to 80%[1]	1.1	2.2	3.3	ns
Output Fall Time	t_{OF}	80% to 20%[1]	1.1	2.2	3.3	ns
Output Impedance	R_O	VO=VDD/2	33	46	68	W
Output Clock Duty Cycle		VDD/2, 19.2MHz[1]	45	50	55	%
		VDD/2[1]	45	50	55	%
Frequency Synthesis Error		All Outputs		0		ppm
Cycle to cycle Jitter (all outputs)				250	300	ps
Long Term Jitter (all outputs)		n=1000			750	ps
Power Up Time	t_{PU}	From minimum VDD to outputs stable		1.5	4	ms
Output Enable Time					20	ns
Output Disable Time					20	ns

Table 88. PLL Section AC Characteristics

1.Measured with a 5pF load.

©2011 INTEGRATED DEVICE TECHNOLOGY, INC.

8.5. Typical Power Consumption

Mode	AVDD (V)	PVDD (V)	DVDD_IO DVDD_CORE (V)	I_{AVDD} (mA)	I_{PVDD} (mA)	I_{DVDD_IO} (mA)	I_{DVDD_CORE} (mA)	P_{TOTAL} (mW)	Notes
Playback to Headphone only	1.9	3.6	1.9	11	0	2	8	40	Full scale 1Vrms/10Kohm, does not include PLL/clock buffer section. fs=48kHz, stereo.
Playback to Headphone only	1.9	3.6	1.9	60	0	2	8	133	Full scale 800mVrms/16ohm; does not include PLL/clock buffer section. fs=48kHz, stereo.
Playback to Speaker only	1.9	3.6	1.9	<1	329	2	9	1206	Full scale 500mW/8ohms; includes load but not PLL/clock buffer section. fs=48kHz, stereo.
Record only	1.9	3.6	1.9	8	0	2	6	28	Full scale 500mVrms; does not include PLL/clock buffer section. fs=48kHz, stereo.

Table 89. Typical Power Consumption

8.6. Low Power Mode Power Consumption

Mode	AVDD (V)	PVDD (V)	DVDD_IO DVDD_CORE (V)	I_{AVDD} (mA)	I_{PVDD} (mA)	I_{DVDD_IO} (mA)	I_{DVDD_CORE} (mA)	P_{TOTAL} (mW)	Notes
Playback to Headphone only	1.9	3.6	1.9	7	<1	2	7	29	Full scale 1Vrms/10Kohm, does not include PLL/clock buffer section. fs=48kHz, stereo.
Playback to Headphone only	1.9	3.6	1.9	49	<1	2	7	110	Full scale 707mVrms/16ohm/1%; does not include PLL/clock buffer section. fs=48kHz, stereo.
Playback to Speaker only	1.9	3.6	1.9	<1	336	2	7	1228	500mW/8ohms; includes load but not PLL/clock buffer section. fs=48kHz, stereo.
Record only	1.9	3.6	1.9	3	0	1	5	17	Full scale 500mVrms; does not include PLL/clock buffer section. fs=48kHz, stereo.
Record only	1.9	3.6	1.9	3	0	<1	4	12	Full scale 500mVrms; does not include PLL/clock buffer section. fs=8kHz, stereo.

Table 90. Low power mode power consumption

Low Power Settings
1) DAC/ADC modulators set to half rate
2) Constant Output Power function disabled
3) All unused functions disabled (for example, Input PGA, Input mux, and ADC disabled for playback tests)
4) Register 0x73=0x06
5) Register 0x75=0x02
6) PLL block power consumption not included

©2011 INTEGRATED DEVICE TECHNOLOGY, INC.

9. REGISTER MAP

Register (D15:9)	Name	Remarks	Bit[7]	Bit[6]	Bit[5]	Bit[4]	Bit[3]	Bit[2]	Bit[1]	Bit[0]	Default
R0 (00h)	HPVOLL	Left HP volume	HPVOL_L[6:0]								77h
R1 (01h)	HPVOLR	Right HP volume	HPVOL_R[6:0]								77h
R2 (02h)	SPKVOLL	SPKR Left volume	SPKVOL_L[6:0]								6Fh
R3 (03h)	SPKVOLR	SPKR Right volume	SPKVOL_R[6:0]								6Fh
R4 (04h)	DACVOLL	Left DAC volume	DACVOL_L[7:0]								FFh
R5 (05h)	DACVOLR	Right DAC volume	DACVOL_R[7:0]								FFh
R6 (06h)	ADCVOLL	Left ADC volume	ADCVOL_L[7:0]								BFh
R7 (07h)	ADCVOLR	Right ADC volume	ADCVOL_R[7:0]								BFh
R8 (08h)	INVOLL	Left Input volume		IZCL	INVOL_L						17h
R9 (09h)	INVOLR	Right Input volume		IZCR	INVOL_R						17h
R10 (0Ah)	VUCTL	Volume Update Control	ADCFade	DACFade		INVOLU	ADCVOLU	DACVOLU	SPKVOLU	HPVOLU	C0h
R11 (0Bh)	INMODE	ADC input mode								DS	00h
R12 (0Ch)	INSELL	ADCL signal path	INSEL_L[1:0]		MICBST_L[1:0]						00h
R13 (0Dh)	INSELR	ADCR signal path	INSEL_R[1:0]		MICBST_R[1:0]						00h
R14 (0Eh)	ALC0	ALC0						ALC MODE	ALCSEL[1:0]		00h
R15 (0Fh)	ALC1	ALC1		MAXGAIN[2:0]			ALCL[3:0]				7Bh
R16 (10h)	ALC2	ALC2		MINGAIN[2:0]			HLD[3:0]				00h
R17 (11h)	ALC3	ALC3	DCY[3:0]				ATK[3:0]				32h
R18 (12h)	NGATE	Noise Gate	NGTH[4:0]					NGG[1:0]		NGAT	00h
R19 (13h)	AIC1	Audio Interface 1		BCLKINV	MS	LRP	WL[1:0]		FORMAT[1:0]		0Ah
R20 (14h)	AIC2	Audio Interface 2	DACDSEL[1:0]		ADCDSEL[1:0]		TRI	BLRCM[2:0]			00h
R21 (15h)	AIC3	Audio Interface 3			ADOPDD	ALRPDD	ABCPDD	DDIPDD	DLRPDD	DBCPDD	00h
R22 (16h)	CNVRTR0	ADC Control	ADCPOLR	ADCPOLL	AMONOMIX[1:0]		ADCMU	HPOR	ADCHPDR	ADCHPDL	08h
R23 (17h)	ADCSR	ADC Sample rate	ABCM[1:0]			ABR[1:0]		ABM[2:0]			12h
R24 (18h)	CNVRTR1	DAC Control	DACPOLR	DACPOLL	DMONOMIX[1:0]		DACMU	DEEMPH			08h
R25 (19h)	DACSR	DAC Sample rate	DBCM[1:0]			DBR[1:0]		DBM[2:0]			12h
R26 (1Ah)	PWRM1	Pwr Mgmt (1)	BSTL	BSTR	PGAL	PGAR	ADCL	ADCR	MICB	DIGENB	00h
R27 (1Bh)	PWRM2	Pwr Mgmt (2)	D2S	HPL	HPR	SPKL	SPKR			VREF	00h
R28 (1Ch)	CTL	Additional control	HPSWEN	HPSWPOL	EQ2SW1	EQ2SW0	EQ1SW1	EQ1SW0	TSDEN	TOEN	00h
R29 (1Dh)	THERMTS	Temp Sensor Control	TripHighStat	TripLowStat	TripSplit[1:0]		TripShift[1:0]		Poll[1:0]		09h
R30 (1Eh)	THERMSPKR1	Speaker Thermal Algorithm Control	ForcePwd	InstCutMode	IncRatio[1:0]		IncStep[1:0]		DecStep[1:0]		81h
R31 (1Fh)	CONFIG0	CONFIG0	ASDM1	ASDM0	DSDM1	DSDM0			dc_bypass	sd_force_on	A0h
R32 (20h)	CONFIG1	CONFIG1	EQ2_EN	EQ2_BE2	EQ2_BE1	EQ2_BE0	EQ1_EN	EQ1_BE2	EQ1_BE1	EQ1_BE0	00h
R33 (21h)	GAINCTL	Gain Control	zerodet_flag		zerodetlen1	zerodetlen0		auto_mute			24h
R34 (22h)	COP1	Constant Output Power1	COPAtten	COPGain	HDeltaEn	COPTarget[4:0]					08h
R35 (23h)	COP2	Constant Output Power2		HDCOMP MODE	AvgLength[3:0]				MonRate[1:0]		02h
R36 (24h)	DMICCTL	D-Mic Control	DMicEn			DMono	DMPhAdj1	DMPhAdj0	DMRate1	DMRate0	00h
R37 (25h)	CLECTL	CMPLMTCTL				Lvl_Mode	WindowSel	Exp_En	Limit_En	Comp_En	00h
R38 (26h)	MUGAIN	CLEMakeUpGain				CLEMUG4	CLEMUG3	CLEMUG2	CLEMUG1	CLEMUG0	00h
R39 (27h)	COMPTH	Compressor Threshold	COMPTH7	COMPTH6	COMPTH5	COMPTH4	COMPTH3	COMPTH2	COMPTH1	COMPTH0	00h
R40 (28h)	CMPRAT	Compressor Ratio				CMPRAT4	CMPRAT3	CMPRAT2	CMPRAT1	CMPRAT0	00h
R41 (29h)	CATKTCL	Comp Attack time const Low	CATKTC7	CATKTC6	CATKTC5	CATKTC4	CATKTC3	CATKTC2	CATKTC1	CATKTC0	00h
R42(2Ah)	CATKTCH	Comp Attack time const High	CATKTC15	CATKTC14	CATKTC13	CATKTC12	CATKTC11	CATKTC10	CATKTC9	CATKTC8	00h
R43 (2Bh)	CRELTCL	Comp release time const Low	CRELTC7	CRELTC6	CRELTC5	CRELTC4	CRELTC3	CRELTC2	CRELTC1	CRELTC0	00h
R44 (2Ch)	CRELTCH	Comp release time const High	CRELTC15	CRELTC14	CRELTC13	CRELTC12	CRELTC11	CRELTC10	CRELTC9	CRELTC8	00h
R45 (2Dh)	LIMTH	Limiter Threshold	LIMTH7	LIMTH6	LIMTH5	LIMTH4	LIMTH3	LIMTH2	LIMTH1	LIMTH0	00h
R46 (2Eh)	LIMTGT	Limiter Target	LIMTGT7	LIMTG6	LIMTGT5	LIMTGT4	LIMTGT3	LIMTGT2	LIMTGT1	LIMTGT0	00h
R47 (2Fh)	LATKTCL	Limiter Attack time constant Low	LATKTC7	LATKTC6	LATKTC5	LATKTC4	LATKTC3	LATKTC2	LATKTC1	LATKTC0	00h
R48 (30h)	LATKTCH	Limiter Attack time constant High	LATKTC15	LATKTC14	LATKTC13	LATKTC12	LATKTC11	LATKTC10	LATKTC9	LATKTC8	00h
R49 (31h)	LRELTCL	Limiter Release time constant Low	LRELTC7	LRELTC6	LRELTC5	LRELTC4	LRELTC3	LRELTC2	LRELTC1	LRELTC0	00h
R50 (32h)	LRELTCH	Limiter Release time constant High	LRELTC15	LRELTC14	LRELTC13	LRELTC12	LRELTC11	LRELTC10	LRELTC9	LRELTC8	00h
R51 (33h)	EXPTH	Expander Threshold	EXPTH7	EXPTH6	EXPTH5	EXPTH4	EXPTH3	EXPTH2	EXPTH1	EXPTH0	00h

Table 91. Register Map

©2011 INTEGRATED DEVICE TECHNOLOGY, INC.

Register (D15:9)	Name	Remarks	Bit[7]	Bit[6]	Bit[5]	Bit[4]	Bit[3]	Bit[2]	Bit[1]	Bit[0]	Default
R52 (34h)	EXPRAT	Expander Ratio						EXPRAT2	EXPRAT1	EXPRAT0	00h
R53 (35h)	XATKTCL	Expander Attack time constant Low	XATKTC7	XATKTC6	XATKTC5	XATKTC4	XATKTC3	XATKTC2	XATKTC1	XATKTC0	00h
R54 (36h)	XATKTCH	Expander Attack time constant High	XATKTC15	XATKTC14	XATKTC13	XATKTC12	XATKTC11	XATKTC10	XATKTC9	XATKTC8	00h
R55 (37h)	XRELTCL	Expander Release time constant Low	XRELTC7	XRELTC6	XRELTC5	XRELTC4	XRELTC3	XRELTC2	XRELTC1	XRELTC0	00h
R56 (38h)	XRELTCH	Expander Release time constant High	XRELTC15	XRELTC14	XRELTC13	XRELTC12	XRELTC11	XRELTC10	XRELTC9	XRELTC8	00h
R57 (39h)	FXCTL	Effects Control				3DEN	TEEN	TNLFBYP	BEEN	BNLFBYP	00h
R58 (3Ah)	DACCRWRL	DACCRAM_WRITE_LO	DACCRWD[7:0]								00h
R59 (3Bh)	DACCRWRM	DACCRAM_WRITE_MID	DACCRWD[15:8]								00h
R60 (3Ch)	DACCRWRH	DACCRAM_WRITE_HI	DACCRWD[23:16]								00h
R61 (3Dh)	DACCRRDL	DACCRAM_READ_LO	DACCRRD[7:0]								00h
R62 (3Eh)	DACCRRDM	DACCRRAM_READ_MID	DACCRRD[15:8]								00h
R63 (3Fh)	DACCRRDH	DACCRRAM_READ_HI	DACCRRD[23:16]								00h
R64 (40h)	DACCRADDR	DACCRAM_ADDR	DACCRADD[7:0]								00h
R65 (41h)	DCOFSEL	DC_COEF_SEL						dc_coef_sel[2:0]			05h
R66-123	RSVD		RSVD								NA
R124(7Ch)	DEVADR	I2C Device Address	ADDR7	ADDR6	ADDR5	ADDR4	ADDR3	ADDR2	ADDR1	ADDR0	D2h
R125(7Dh)	DEVIDL	Device IDLow	DID7	DID6	DID5	DID4	DID3	DID2	DID1	DID0	xxh[1]
R126(7Eh)	DEVIDH	Device ID High	DID15	DID14	DID13	DID12	DID11	DID10	DID9	DID8	xxh[1]
R127(7Fh)	REVID	Device Revision	MAJ3	MAJ2	MAJ1	MAJ0	MNR3	MNR2	MNR1	MNR0	xxh[2]
R128(80h)	RESET	Reset	Writing 0x85 to this register resets all registers to their default state								00h
R129-R135 (81h - 87h)	Reserved		RSVD								NA
R136(88h)	THERMSPKR2	Speaker Thermal Algorithm Status	ForcePwd Status	VolStatus[6:0]							08h
R137-R255 (88h-FFh)	Reserved		RSVD								NA

Table 91. Register Map

1. Device ID is dependent upon clock programming.
2. For device revision information, please contact IDT.

Note:

- Registers not described in this map should be considered “reserved”.
- Numerous portions of the register map are compatible with popular codecs from other vendors.

©2011 INTEGRATED DEVICE TECHNOLOGY, INC.

10. PIN INFORMATION

10.1. ACS422A00 Pin Diagram

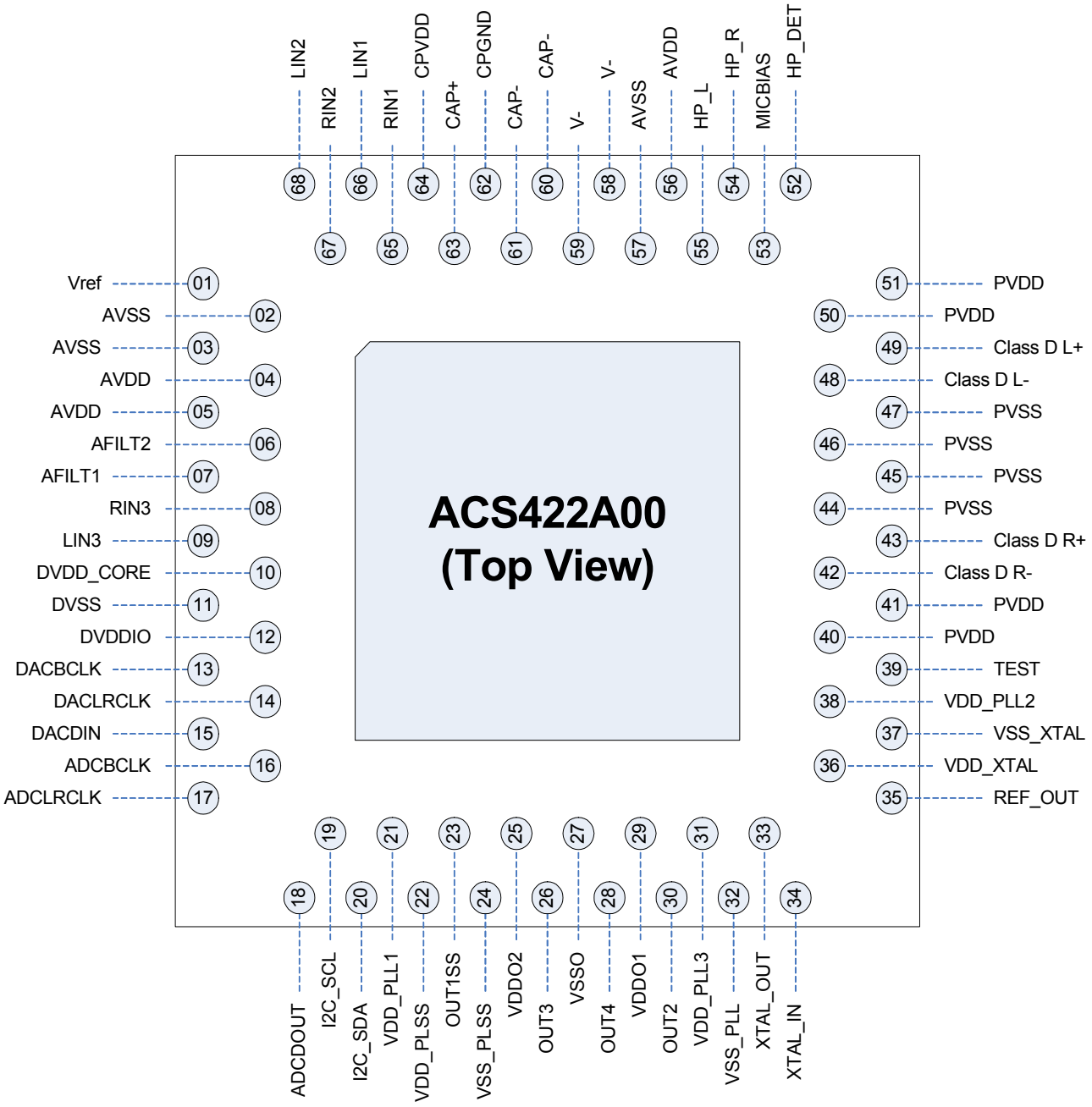

Figure 34. ACS422A00 Pinout

©2011 INTEGRATED DEVICE TECHNOLOGY, INC.

10.2. ACS422D00 Pin Diagram

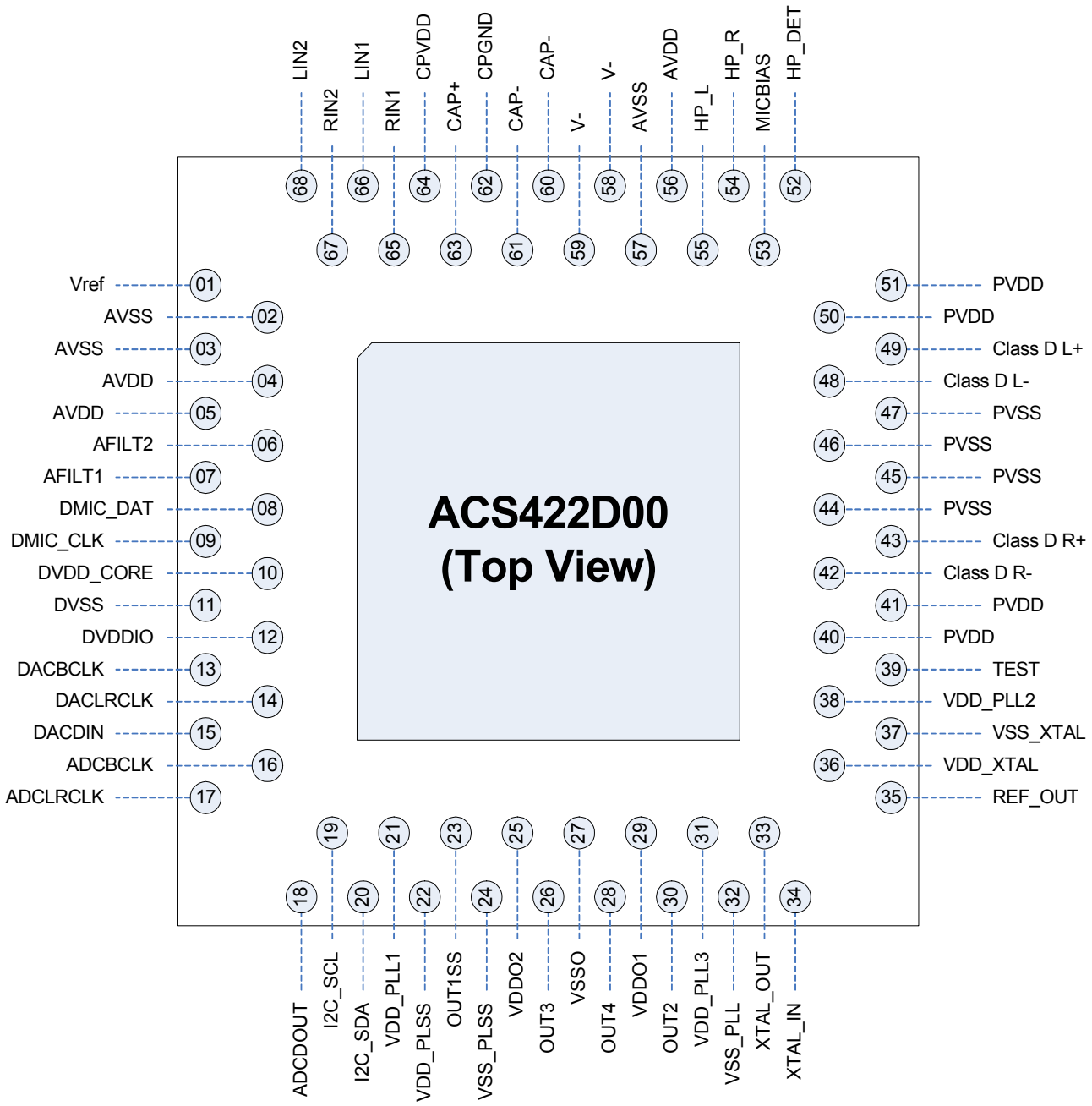

Figure 35. ACS422D00 Pinout

©2011 INTEGRATED DEVICE TECHNOLOGY, INC.

10.3. Pin Tables

10.3.1. Power Pins

Pin Name	Pin Function	I/O	Internal Pull-up Pull-down	Pin location
PVDD	BTL supply	I(Power)	None	40, 41, 50,51
PVSS	BTL supply	I(Power)	None	44, 45, 46, 47
DVDD_Core	DSP and other core logic+clocks	I(Power)	None	10
DVDDIO	Interface (I^2S, I^2C, GPIO)	I(Power)	None	12
DVSS	Digital return	I(Power)	None	11
AVDD	Analog core supply	I(Power)	None	4, 5, 56
AVSS	Analog return	I(Power)	None	2, 3, 57
CPVDD	Charge pump supply	I(Power)	None	64
CAP+	Flying cap	I/O(Power)	None	63
CAP-	Flying cap	I/O(Power)	None	60, 61
V-	Negative Analog supply (Bypass cap)	O(Power)	None	58, 59
CPGND	Charge pump group	I(Power)	None	62
VDD_PLL1	PLL supply	I(Power)	None	21
VDD_PLLSS	PLL supply	I(Power)	None	22
VDD_PLL3	PLL supply	I(Power)	None	31
VDD_PLL2	PLL supply	I(Power)	None	38
VDDO2	Out3 output buffer supply	I(Power)	None	25
VDDO1	Out2/4 output buffer supply	I(Power)	None	29
VDD_XTAL	Oscillator supply	I(Power)	None	36
VSS_PLSS	PLL return	I(Power)	None	24
VSSO	PLL output buffer return	I(Power)	None	27
VSS_PLL	PLL return	I(Power)	None	32
VSS_XTAL	Oscillator return	I(Power)	None	37

Table 92. Power Pins

Total Pins: 35

10.3.2. Reference Pins

Pin Name	Pin Function	I/O	Internal Pull-up Pull-down	Pin location
MICBIAS	2.5V 1.5 mA microphone bias	O(Analog)	None	53
AFILT1	ADC input filter cap	I(Analog)	None	7
AFILT2	ADC input filter cap	I(Analog)	None	6
Vref	VREF reference pin (bypass)	I(Analog)	None	1

Table 93. Reference Pins

Total Pins: 4

©2011 INTEGRATED DEVICE TECHNOLOGY, INC.

10.3.3. Analog Input Pins

Pin Name	Pin Function	I/O	Internal Pull-up Pull-down	Pin location
LIN1	Left Input #1	I(Analog)	None	66
RIN1	Right Input #1	I(Analog)	None	65
LIN2	Left Input #2	I(Analog)	None	68
RIN2	Right Input #2	I(Analog)	None	67
LIN3 DMIC_CLK	Left Input #3 for ACS422A00 Digital Mic Clock for ACS422D00	I(Analog)	None	9
RIN3 DMIC_DAT	Right Input #3 for ACS422A00 Digital Mic Data for ACS422D00	I(Analog)	None	8

Table 94. Analog Input Pins

Total Pins: 6

10.3.4. Analog Output Pins

Pin Name	Pin Function	I/O	Internal Pull-up Pull-down	Pin location
HP_L	Headphone output	O(Analog)	None	54
HP_R	Headphone output	O(Analog)	None	55
Class D L+	BTL Left positive output	O(Analog)	None	49
Class D L-	BTL Left negative output	O(Analog)	None	48
Class D R+	BTL Right positive output	O(Analog)	None	43
Class D R-	BTL Right negative output	O(Analog)	None	42

Table 95. Analog Output Pins

Total Pins: 6

10.3.5. Data and Control Pins

Pin Name	Pin Function	I/O	Internal Pull-up Pull-down	Pin location
ADCBCLK	ADC I^2S shift clock	I/O(Digital)	Pull-Down	16
ADCLRCLK	ADC I^2S framing clock	I/O(Digital)	Pull-Down	17
ADCDOUT	ADC I^2S output data	O(Digital)	Pull-Down	18
DACBCLK	DAC I^2S shift clock	I/O(Digital)	Pull-Down	13
DACLRCLK	DAC I^2S framing clock	I/O(Digital)	Pull-Down	14
DACDIN	DAC I^2S input data	I(Digital)	Pull-Down	15
I2C_SCL	SCL I^2C shift clock	I(Digital)	Pull-Up	19
I2C_SDA	SDA I^2C shift data	I(Digital)	Pull-Up	20
HP_DET	Headphone jack detection	I(Digital)	Pull-Up	52
TEST	Reserved test pin	I(Analog)	None	39

Table 96. Data and Control Pins

Total Pins: 10

©2011 INTEGRATED DEVICE TECHNOLOGY, INC.

10.3.6. PLL Pins

Pin Name	Pin Function	I/O	Internal Pull-up Pull-down	Pin location
XTAL_IN	Crystal input	I(XTAL)	None	34
XTAL_OUT	Crystal output	O(XTAL)	None	33
Out4	Buffered PLL clock output	O(Digital)	Pull-Down	28
Out3	Buffered PLL clock output	O(Digital)	Pull-Down	26
Out2	Buffered PLL clock output	O(Digital)	Pull-Down	30
Out1SS	Buffered PLL clock output	O(Digital)	Pull-Down	23
REF_OUT	Buffered crystal clock output	O(Digital)	Pull-Down	35

Table 97. PLL Pins

Total Pins: 7

©2011 INTEGRATED DEVICE TECHNOLOGY, INC.

11. PACKAGE INFORMATION

11.1. Package Drawing

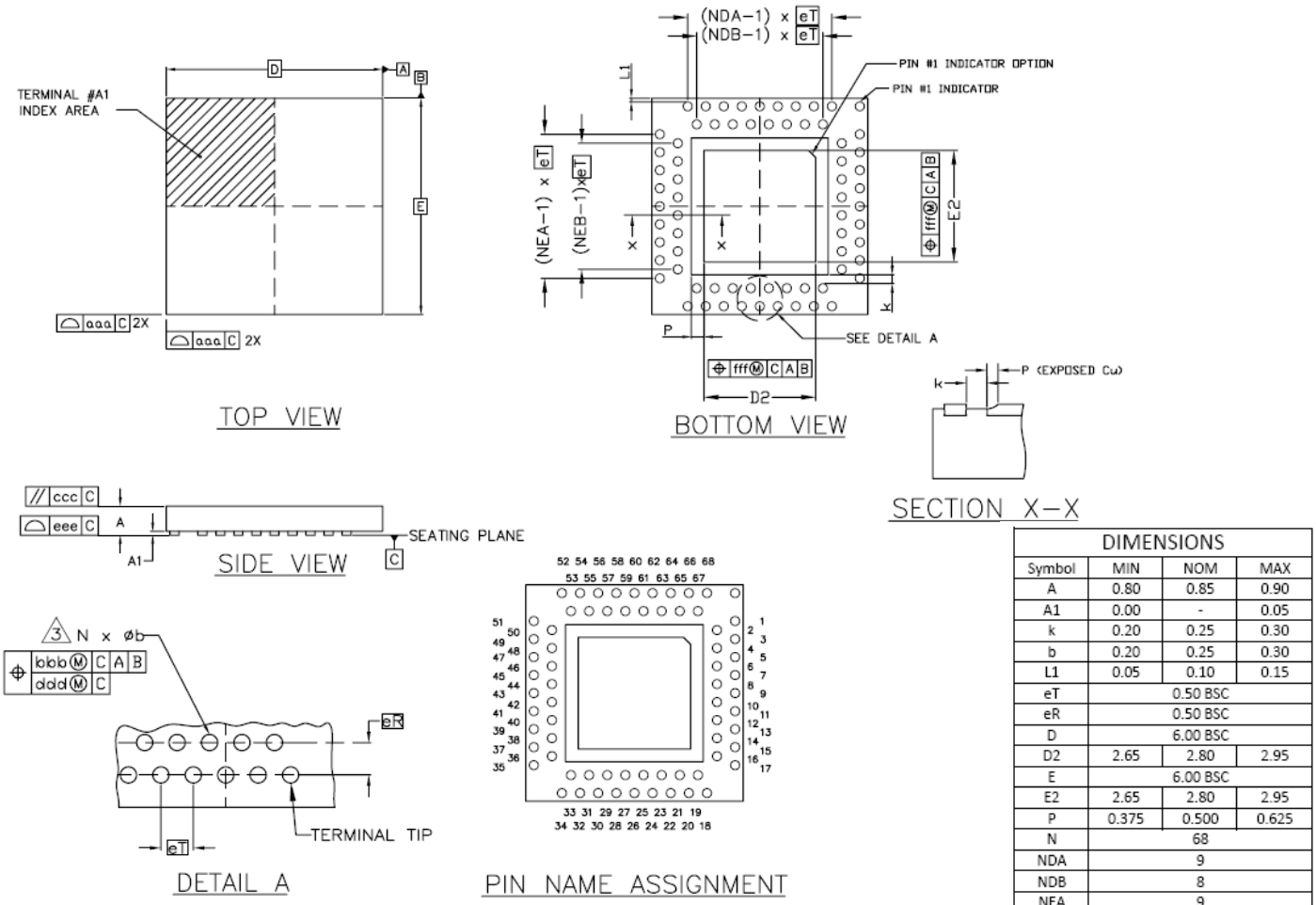

DIMENSIONS			
Symbol	MIN	NOM	MAX
A	0.80	0.85	0.90
A1	0.00	-	0.05
k	0.20	0.25	0.30
b	0.20	0.25	0.30
L1	0.05	0.10	0.15
eT	0.50 BSC		
eR	0.50 BSC		
D	6.00 BSC		
D2	2.65	2.80	2.95
E	6.00 BSC		
E2	2.65	2.80	2.95
P	0.375	0.500	0.625
N	68		
NDA	9		
NDB	8		
NEA	9		
NEB	8		
TOLERANCE OF FORM & POSITION			
aaa	0.10		
bbb	0.10		
ccc	0.10		
ddd	0.05		
eee	0.08		
fff	0.10		

NOTES:

1. DIMENSIONING AND TOLERANCING PER ASME Y14.5M–1994
2. 'eT' and 'eR' REPRESENT THE BASIC LAND GRID PITCH .
3. "N' IS THE TOTAL NUMBER OF I/O (EXCLUDING DUMMY PADS)
4. ALL DIMENSIONS ARE IN MILLIMETERS.

Note: To create a thermal pad size follow "D2" and "E2" value. Ignore "P" and "k"

Figure 36. Package Outline

11.2. Pb Free Process- Package Classification Reflow Temperatures

Package Thickness	Volume mm^3 <350	Volume mm^3 350 - 2000	Volume mm^3 >2000
<1.6mm	260 + 0 ^oC*	260 + 0 ^oC*	260 + 0 ^oC*
1.6mm - 2.5mm	260 + 0 ^oC*	250 + 0 ^oC*	245 + 0 ^oC*
> or = 2.5mm	250 + 0 ^oC*	245 + 0 ^oC*	245 + 0 ^oC*
*Tolerance: The device manufacturer/supplier shall assure process compatibility up to and including the stated classification temperature (this means Peak reflow temperature +0 ^oC. For example 260 ^oC+0 ^oC) at the rated MSL level.			

Table 98. Reflow Temperatures

Note: IDT's package thicknesses are <2.5mm and <350 mm^3, so 260 applies in every case.

©2011 INTEGRATED DEVICE TECHNOLOGY, INC.

12. APPLICATION INFORMATION

For application information, please see reference designs and application notes available on www.idt.com.

13. ORDERING INFORMATION

ACS422A00TAGyyX	Analog Microphone
ACS422D00TAGyyX	Digital Microphone

Please contact an IDT Sales Representative with your clock requirements for factory programming. This programming will determine the orderable part number for the ACS422x00.

14. DISCLAIMER

While the information presented herein has been checked for both accuracy and reliability, manufacturer assumes no responsibility for either its use or for the infringement of any patents or other rights of third parties, which would result from its use. No other circuits, patents, or licenses are implied. This product is intended for use in normal commercial applications. Any other applications, such as those requiring extended temperature range, high reliability, or other extraordinary environmental requirements, are not recommended without additional processing by manufacturer. Manufacturer reserves the right to change any circuitry or specifications without notice. Manufacturer does not authorize or warrant any product for use in life support devices or critical medical instruments.

©2011 INTEGRATED DEVICE TECHNOLOGY, INC.

15. DOCUMENT REVISION HISTORY

Revision	Date	Description of Change
0.5	May 2010	initial release
0.6	September 2010	Pinout changed, package changed, register order changed/additions. jitter specs adjusted
0.7	January 2011	Updated pinout diagram
0.8	April 2011	Cleaned up block diagram and pinout (separated analog and digital mic pinouts), corrected to pull-up on HP_DET. Updated Input and Output processing diagrams.
0.81	May 2011	Updated application information for class D amplifier.
0.82	May 2011	Corrected mismatch between pinout and package number assignments. Front page description and target applications updated.
0.83	June 2011	Updated registers for ZB silicon. R136 default to 08h, R34 default to 08h, R27 bits 1:2 now reserved. R16, R8, R9 bit 7 now reserved. R31 bit 0 now sd_force_on
1.0	July 2011	Removed Preliminary and Confidential status from datasheet. Updated TAG/TLA package diagram. Removed applications section, see reference design and application notes on www.idt.com, updates to the electrical characteristics. Compressor/limiter configuration section separated. Updated audio output references to include 2W at 4ohms. Added DDX(TM) name and logo.
1.1	November 2011	Changed 40mW to 35mW on headphone output and changed Power Supply Rejection Ration maximum from 5.5 V to 5.25 V.
1.2	January 2012	Corrected the I/O type for the Analog output pins. Corrected the pin location in Analog output pin table for the BTL outputs.

www.IDT.com

6024 Silver Creek Valley Road
San Jose, California 95138

DISCLAIMER Integrated Device Technology, Inc. (IDT) and its subsidiaries reserve the right to modify the products and/or specifications described herein at any time and at IDT's sole discretion. All information in this document, including descriptions of product features and performance, is subject to change without notice. Performance specifications and the operating parameters of the described products are determined in the independent state and are not guaranteed to perform the same way when installed in customer products. The information contained herein is provided without representation or warranty of any kind, whether express or implied, including, but not limited to, the suitability of IDT's products for any particular purpose, an implied warranty of merchantability, or non-infringement of the intellectual property rights of others. This document is presented only as a guide and does not convey any license under intellectual property rights of IDT or any third parties.

IDT's products are not intended for use in life support systems or similar devices where the failure or malfunction of an IDT product can be reasonably expected to significantly affect the health or safety of users. Anyone using an IDT product in such a manner does so at their own risk, absent an express, written agreement by IDT.

Integrated Device Technology, IDT and the IDT logo are registered trademarks of IDT. Other trademarks and service marks used herein, including protected names, logos and designs, are the property of IDT or their respective third party owners.

ООО «ЛайфЭлектроникс» “LifeElectronics” LLC

ИНН 7805602321 КПП 780501001 Р/С 40702810122510004610 ФАКБ "АБСОЛЮТ БАНК" (ЗАО) в г.Санкт-Петербурге К/С 30101810900000000703 БИК 044030703

Компания «Life Electronics» занимается поставками электронных компонентов импортного и отечественного производства от производителей и со складов крупных дистрибьюторов Европы, Америки и Азии.

С конца 2013 года компания активно расширяет линейку поставок компонентов по направлению коаксиальный кабель, кварцевые генераторы и конденсаторы (керамические, пленочные, электролитические), за счёт заключения дистрибьюторских договоров

Мы предлагаем:

- *Конкурентоспособные цены и скидки постоянным клиентам.*
- *Специальные условия для постоянных клиентов.*
- *Подбор аналогов.*
- *Поставку компонентов в любых объемах, удовлетворяющих вашим потребностям.*

- *Приемлемые сроки поставки, возможна ускоренная поставка.*
- *Доставку товара в любую точку России и стран СНГ.*
- *Комплексную поставку.*
- *Работу по проектам и поставку образцов.*
- *Формирование склада под заказчика.*

- *Сертификаты соответствия на поставляемую продукцию (по желанию клиента).*
- *Тестирование поставляемой продукции.*
- *Поставку компонентов, требующих военную и космическую приемку.*
- *Входной контроль качества.*
- *Наличие сертификата ISO.*

В составе нашей компании организован Конструкторский отдел, призванный помогать разработчикам, и инженерам.

Конструкторский отдел помогает осуществить:

- *Регистрацию проекта у производителя компонентов.*
- *Техническую поддержку проекта.*
- *Защиту от снятия компонента с производства.*
- *Оценку стоимости проекта по компонентам.*
- *Изготовление тестовой платы монтаж и пусконаладочные работы.*

Тел: +7 (812) 336 43 04 (многоканальный)
Email: org@lifeelectronics.ru

www.lifeelectronics.ru