THIS DRAWING IS UNPUBLISHED. RELEASED FOR PUBLICATION 20
© COPYRIGHT 20 BY - ALL RIGHTS RESERVED.

REVISIONS

P	LTR	DESCRIPTION	DATE	DWN	APVD
	A	REVISED PER ECR-18-014960	21SEP2018	SS	JL
	A1	REVISED PER ECR-19-008871	13JUN2019	SR	DD
	A2	REVISED PER ECR-19-009651	12JUL2019	SR	DD

1. MATERIALS:
   HOUSING: PBT
   DIMMING CONTACTS (QTY. 4): COPPER ALLOY
   LINE VOLTAGE CONTACTS (QTY. 3): COPPER ALLOY
   GASKET: VINYL/NITRILE FOAM
   O-RING: SILICONE RUBBER
   MEMBRANE VENT: PTFE

2. FINISH:
   DIMMING CONTACTS: NICKEL UNDERPLATE ENTIRE CONTACT 0.127 µm MIN THICK. SELECTIVE GOLD PLATE CONTACT MATING AREA (MATING FACE SIDE ONLY) 0.76 µm MIN THICK. MATTE TIN PLATE TAB ON BOTH SIDES 0.30 µm MIN THICK.
   LINE VOLTAGE CONTACTS: MATTE TIN PLATE

3. MATING INTERFACE PER ANSI C136.41-2013.

4. ADHESIVE BACKED GASKET SUPPLIED BUT NOT INSTALLED.

5. ADDITIONAL COVERS AND SLEEVES OF VARIOUS HEIGHTS ARE AVAILABLE. CONTACT TE CONNECTIVITY FOR MORE OPTIONS.

7. THIS PRODUCT HAS NOT COMPLETED VALIDATION TESTING.

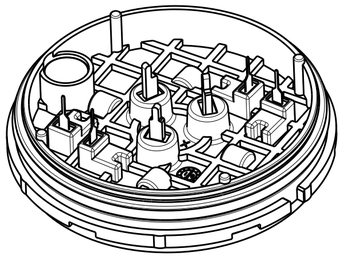

2336396-1 SHOWN

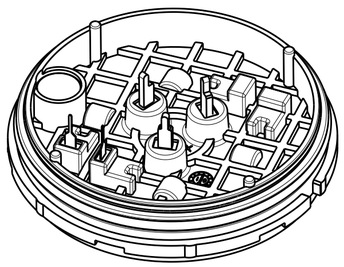

1-2336396-1 SHOWN

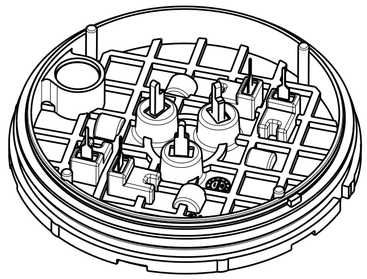

2336396-2 SHOWN

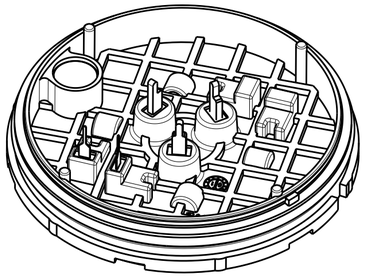

1-2336396-2 SHOWN

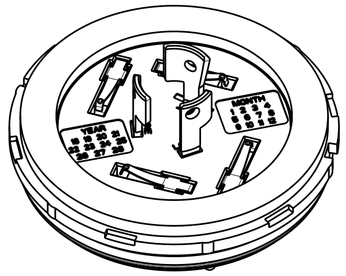

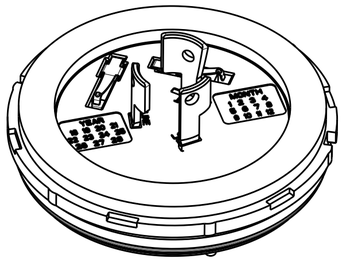

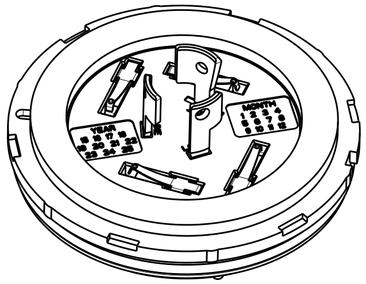

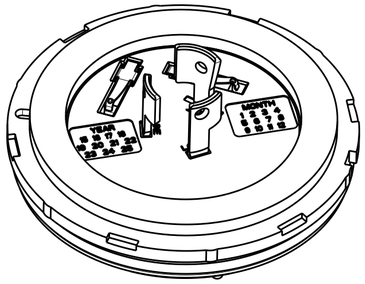

2213996-X	2306130-X	5	13.04	26.20	Ø82.24	Ø78.54	Ø69.80	Ø70.70	Ø72.25	Ø77.53	Ø77.74	Ø81.15	1-2336396-2
2213996-X	2306130-X	7	13.04	26.20	Ø82.24	Ø78.54	Ø69.80	Ø70.70	Ø72.25	Ø77.53	Ø77.74	Ø81.15	2336396-2
2213805-X	2213748-X	5	4.35	27.45	Ø77.00	Ø76.96	Ø64.50	Ø65.00	Ø66.75	Ø71.23	Ø72.00	Ø76.00	1-2336396-1
2213805-X	2213748-X	7	4.35	27.45	Ø77.00	Ø76.96	Ø64.50	Ø65.00	Ø66.75	Ø71.23	Ø72.00	Ø76.00	2336396-1
REPRESENTATIVE SLEEVE P/N 5	REPRESENTATIVE COVER P/N 5	CONTACT POSITIONS	DIM T	DIM S	DIM Y	DIM X	DIM P	DIM N	DIM M MAX WITH SLEEVE	DIM M MAX W/OUT SLEEVE	DIM F	DIM E	PART NO.

THIS DRAWING IS A CONTROLLED DOCUMENT.

DIMENSIONS: mm

TOLERANCES UNLESS OTHERWISE SPECIFIED:
0 PLC ±-
1 PLC ±0.2
2 PLC ±0.13
3 PLC ±-
4 PLC ±-
ANGLES ±3°

MATERIAL - 1
FINISH - 2

DWN J.SHAFFER 03MAY2018
CHK M.MOSTOLLER 03MAY2018
APVD -
PRODUCT SPEC 108-32125
APPLICATION SPEC 114-32159
WEIGHT -

TE Connectivity

NAME BASE ASSEMBLY, LIGHT CONTROLLER, SLEEVE COMPATIBLE

SIZE A2 | CAGE CODE - | DRAWING NO C-2336396 | RESTRICTED TO -

CUSTOMER DRAWING | SCALE 2:1 | SHEET 1 OF 5 | REV A2

THIS DRAWING IS UNPUBLISHED. RELEASED FOR PUBLICATION 20
© COPYRIGHT 20 BY - ALL RIGHTS RESERVED.

REVISIONS

P	LTR	DESCRIPTION	DATE	DWN	APVD
	-	SEE SHEET 1	-	-	-

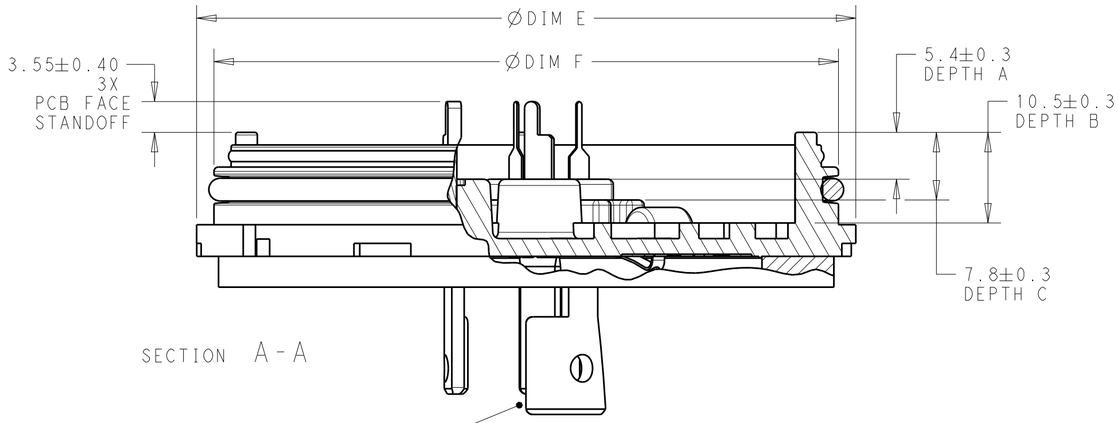

SECTION A-A

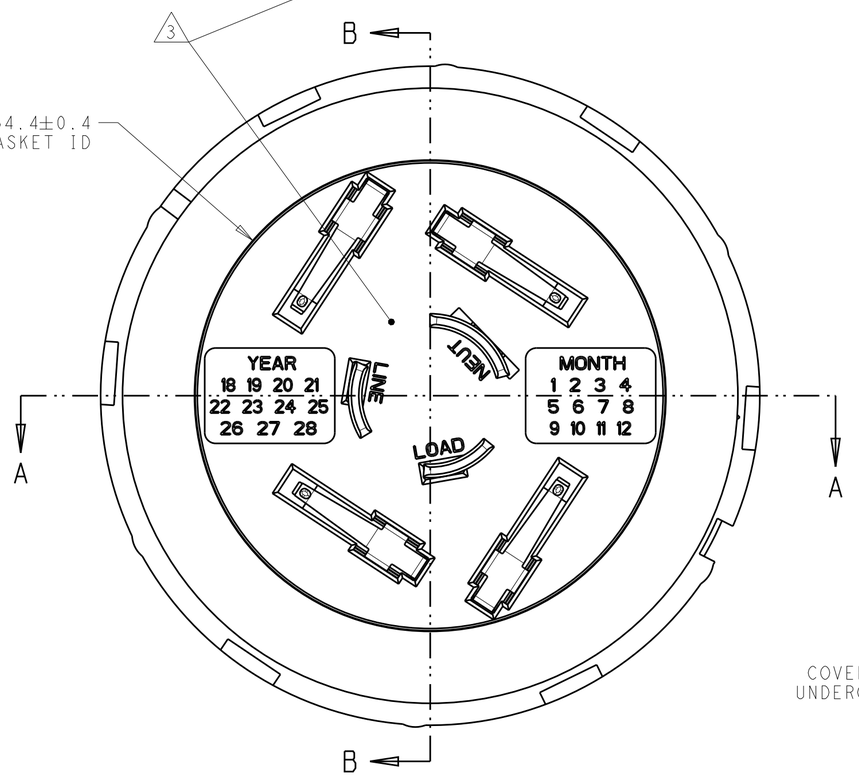

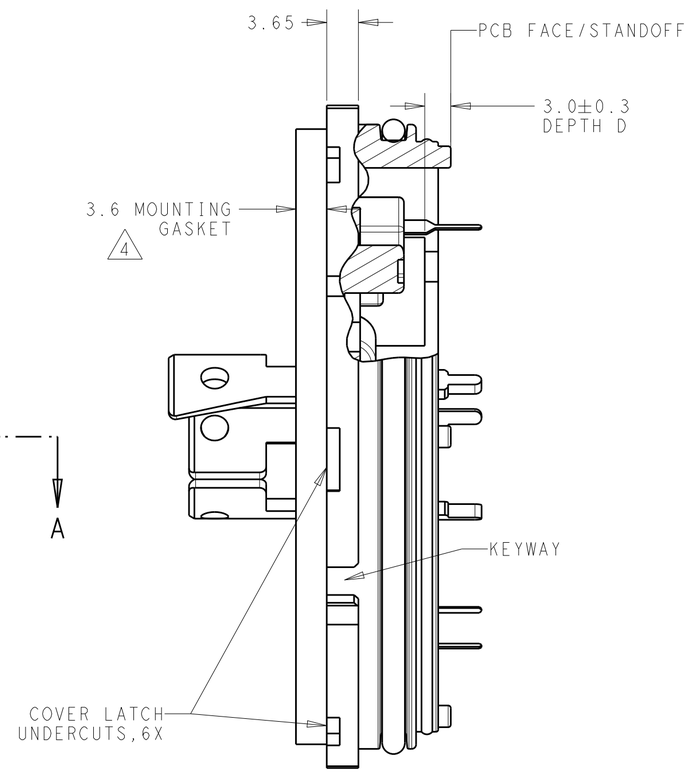

SECTION B-B

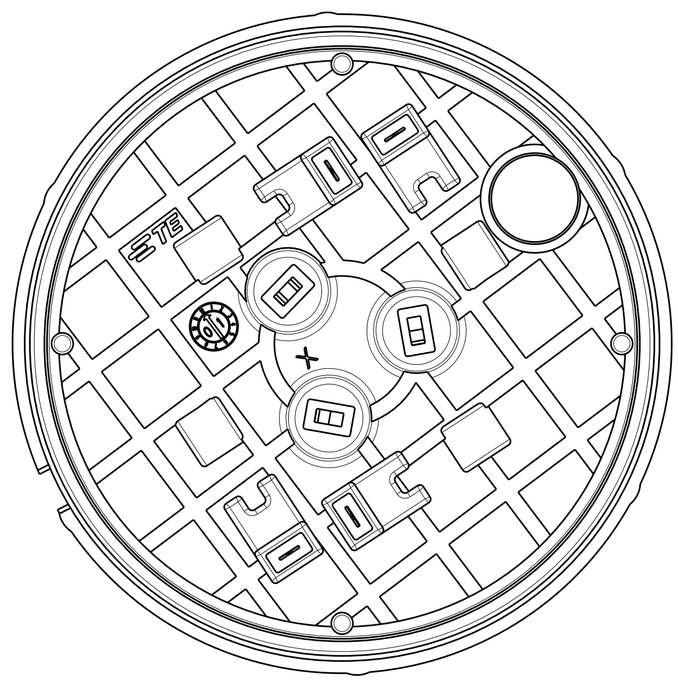

THIS DRAWING IS A CONTROLLED DOCUMENT.		DWN 03MAY2018 J.SHAFFER	TE Connectivity
DIMENSIONS: mm	TOLERANCES UNLESS OTHERWISE SPECIFIED: 0 PLC ±- 1 PLC ±0.2 2 PLC ±0.13 3 PLC ±- 4 PLC ±- ANGLES ±3°	CHK 03MAY2018 M.MOSTOLLER	NAME BASE ASSEMBLY, LIGHT CONTROLLER, SLEEVE COMPATIBLE
		APVD -	
		PRODUCT SPEC 108-32125	
		APPLICATION SPEC 114-32159	SIZE A2 / CAGE CODE - / DRAWING NO C-2336396 / RESTRICTED TO -
MATERIAL - -	FINISH - -	WEIGHT -	
		CUSTOMER DRAWING	SCALE 2:1 / SHEET 2 OF 5 / REV A2

1471-9 (3/13)

THIS DRAWING IS UNPUBLISHED. RELEASED FOR PUBLICATION 20
© COPYRIGHT 20 BY - ALL RIGHTS RESERVED.

REVISIONS

P	LTR	DESCRIPTION	DATE	DWN	APVD
	-	SEE SHEET 1	-	-	-

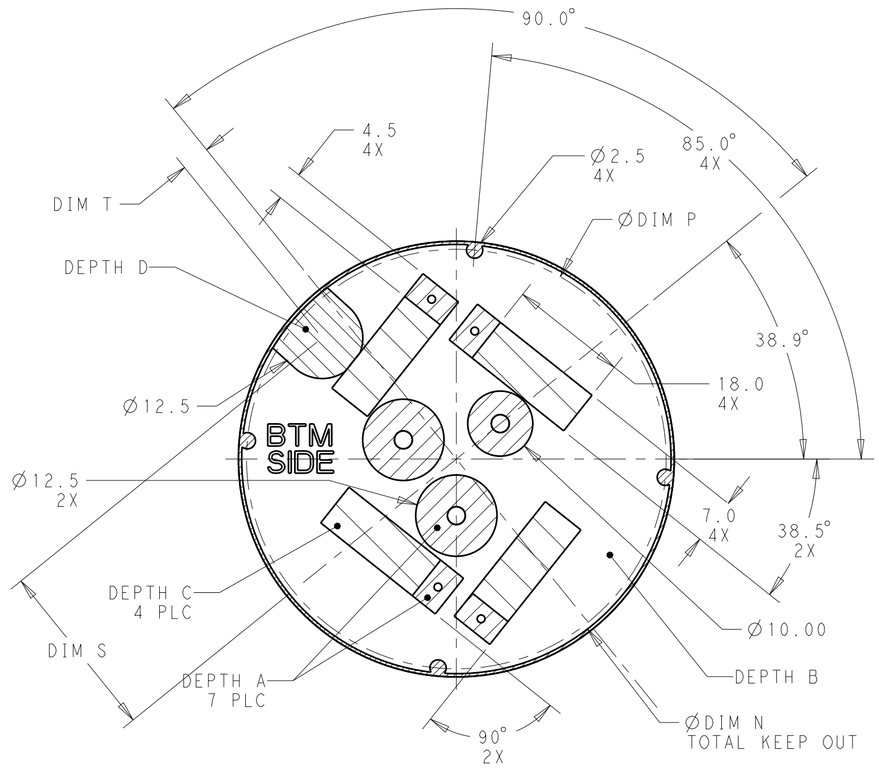

COMPONENT KEEP OUT AREAS
2336396-1 AND 2336396-2

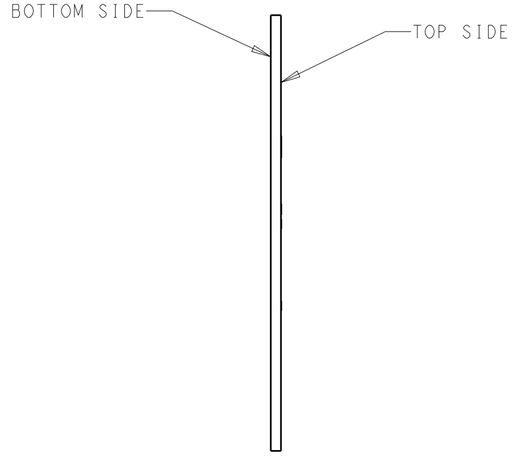

RECOMMENDED PCB
SCALE 3:2

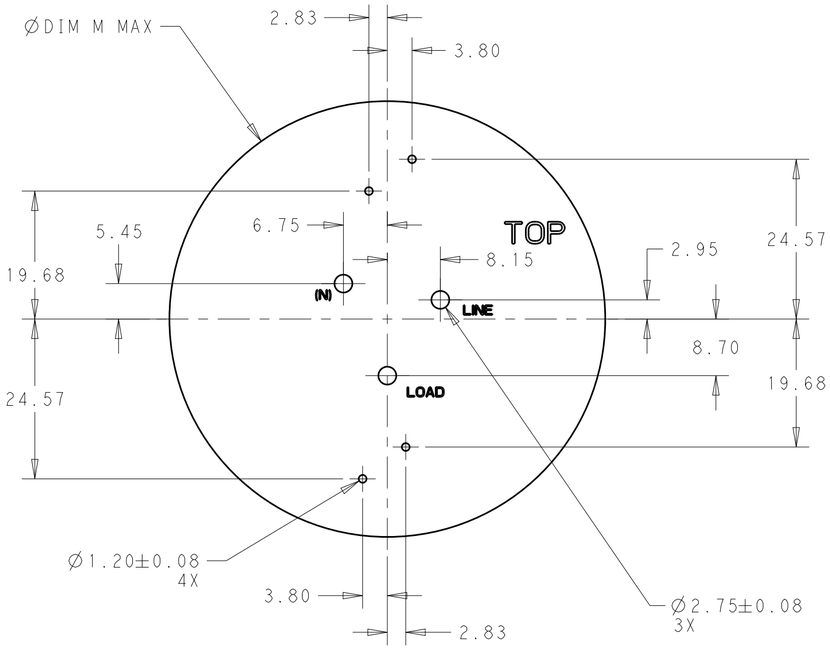

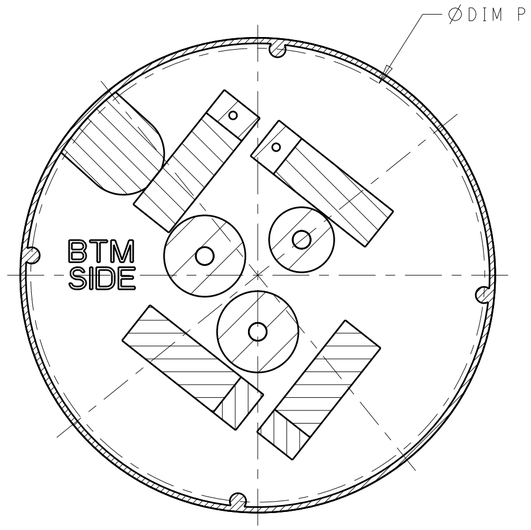

COMPONENT KEEP OUT AREAS
1-2336396-1 AND 1-2336396-2
SAME AS
2336396-1 AND 2336396-2
EXCEPT WHERE SHOWN

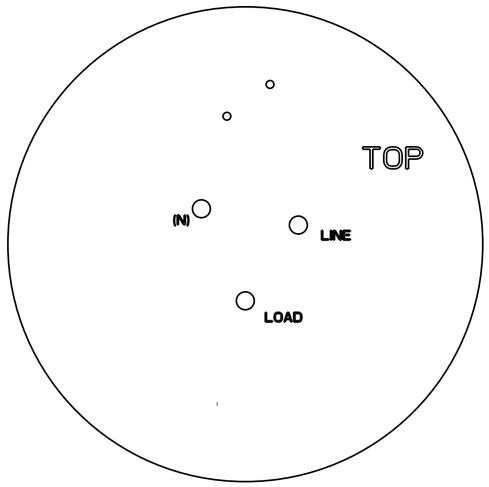

THIS DRAWING IS A CONTROLLED DOCUMENT.

DIMENSIONS: mm

TOLERANCES UNLESS OTHERWISE SPECIFIED:
0 PLC ±-
1 PLC ±0.2
2 PLC ±0.13
3 PLC ±-
4 PLC ±-
ANGLES ±3°

MATERIAL -
FINISH -

DWN J.SHAFFER 03MAY2018
CHK M.MOSTOLLER 03MAY2018
APVD -
PRODUCT SPEC 108-32125
APPLICATION SPEC 114-32159
WEIGHT -

TE Connectivity

NAME BASE ASSEMBLY, LIGHT CONTROLLER, SLEEVE COMPATIBLE

SIZE	CAGE CODE	DRAWING NO	RESTRICTED TO
A2	-	C-2336396	-

CUSTOMER DRAWING | SCALE 2:1 | SHEET 3 OF 5 | REV A2

1471-9 (3/13)

THIS DRAWING IS UNPUBLISHED. RELEASED FOR PUBLICATION 20
© COPYRIGHT 20 BY - ALL RIGHTS RESERVED.

REVISIONS

P	LTR	DESCRIPTION	DATE	DWN	APVD
	-	SEE SHEET 1	-	-	-

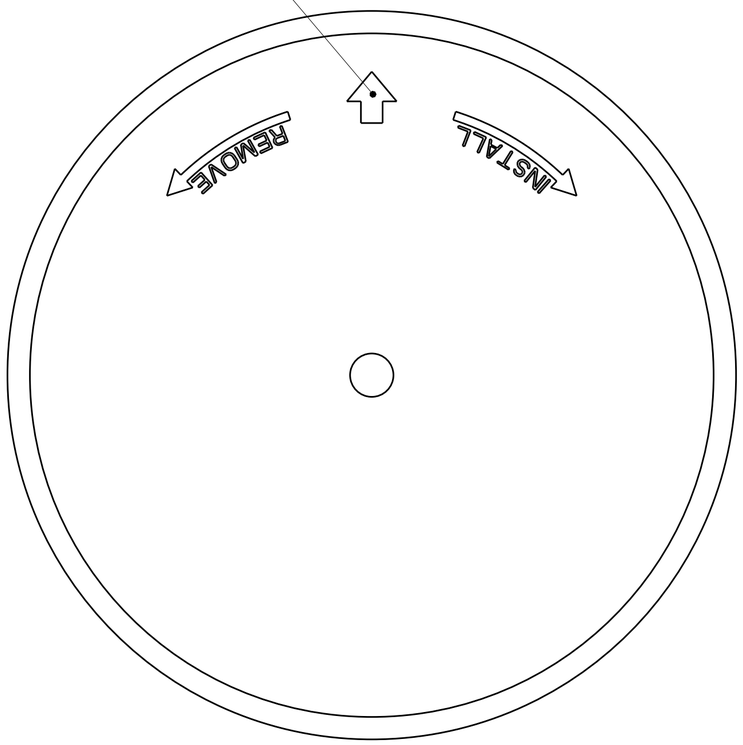

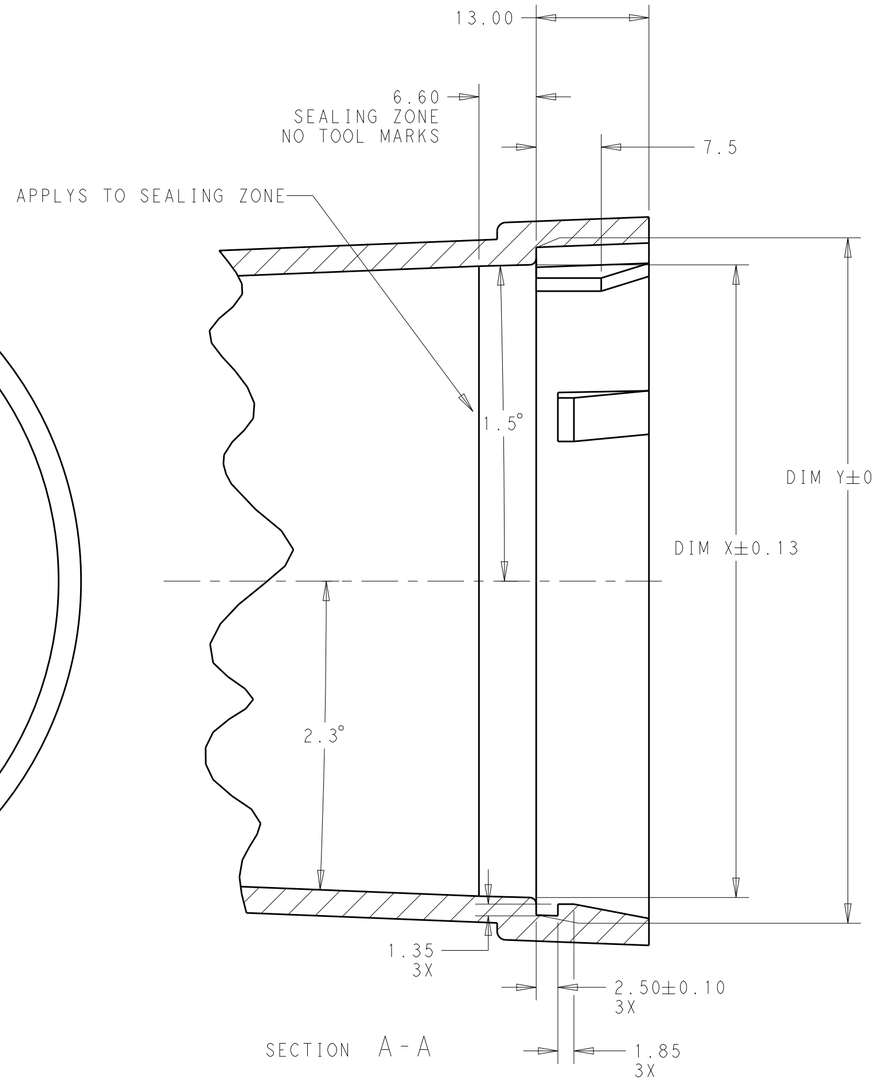

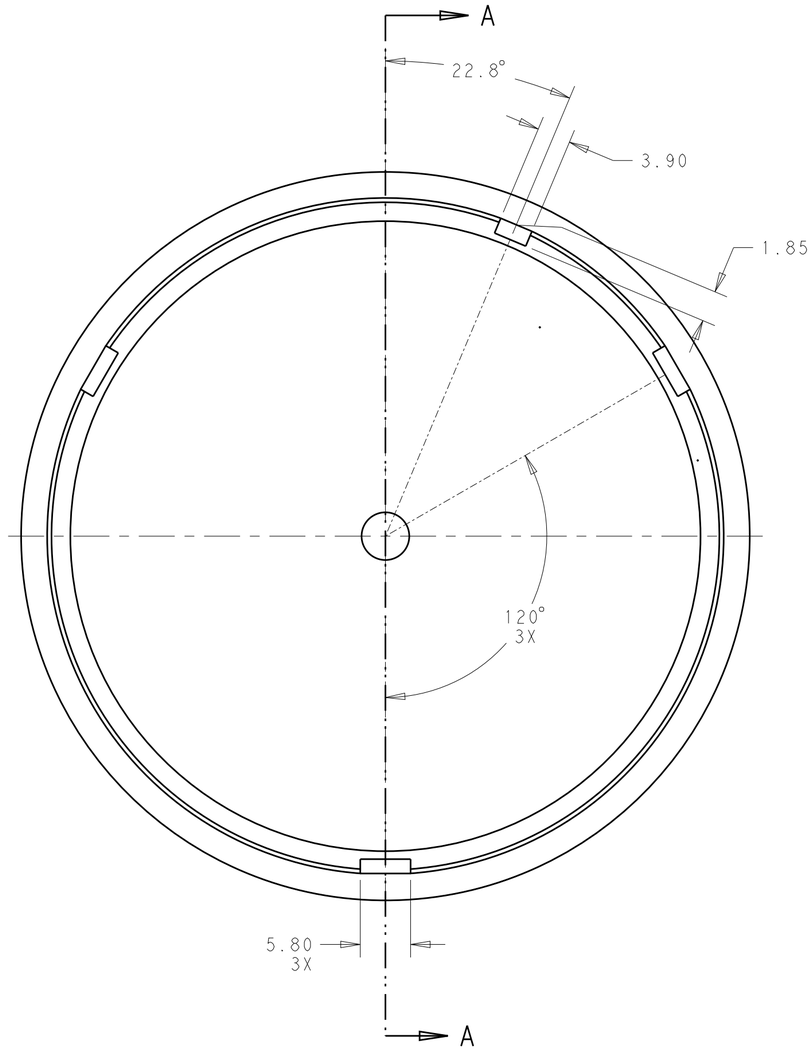

MATING COVER DIMENSIONS
FOR
76MM DIAMETER BASES
(2336396-1, 1-2336396-1)

THIS DRAWING IS A CONTROLLED DOCUMENT.

DIMENSIONS: mm

TOLERANCES UNLESS OTHERWISE SPECIFIED:
0 PLC ±-
1 PLC ±0.2
2 PLC ±0.13
3 PLC ±-
4 PLC ±-
ANGLES ±3°

MATERIAL -
FINISH -

DWN J.SHAFFER 03MAY2018
CHK M.MOSTOLLER 03MAY2018
APVD -
PRODUCT SPEC 108-32125
APPLICATION SPEC 114-32159
WEIGHT -

TE Connectivity

NAME BASE ASSEMBLY, LIGHT CONTROLLER, SLEEVE COMPATIBLE

SIZE	CAGE CODE	DRAWING NO	RESTRICTED TO
A2	-	C-2336396	-

CUSTOMER DRAWING | SCALE 2:1 | SHEET 4 OF 5 | REV A2

THIS DRAWING IS UNPUBLISHED. RELEASED FOR PUBLICATION 20
© COPYRIGHT 20 BY - ALL RIGHTS RESERVED.

REVISIONS

P	LTR	DESCRIPTION	DATE	DWN	APVD
	-	SEE SHEET 1	-	-	-

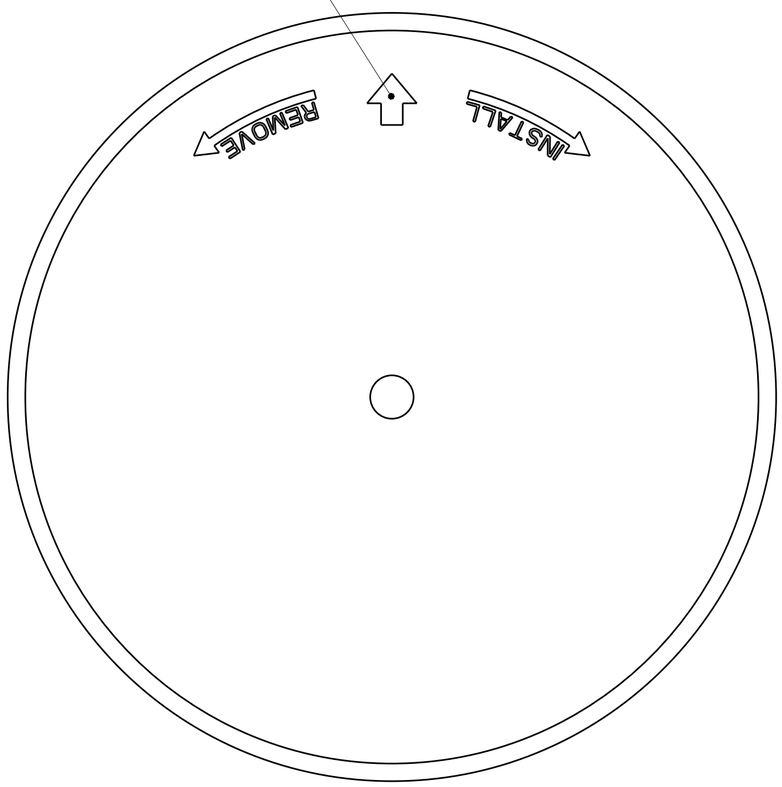

SCALE 2:1

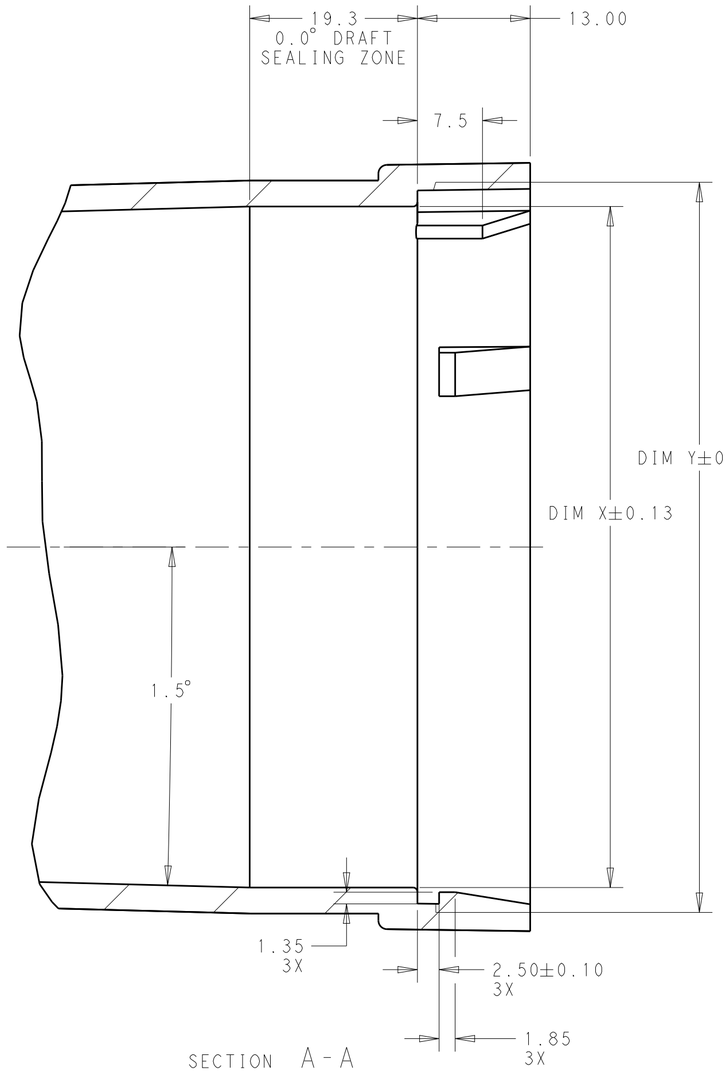

SECTION A-A

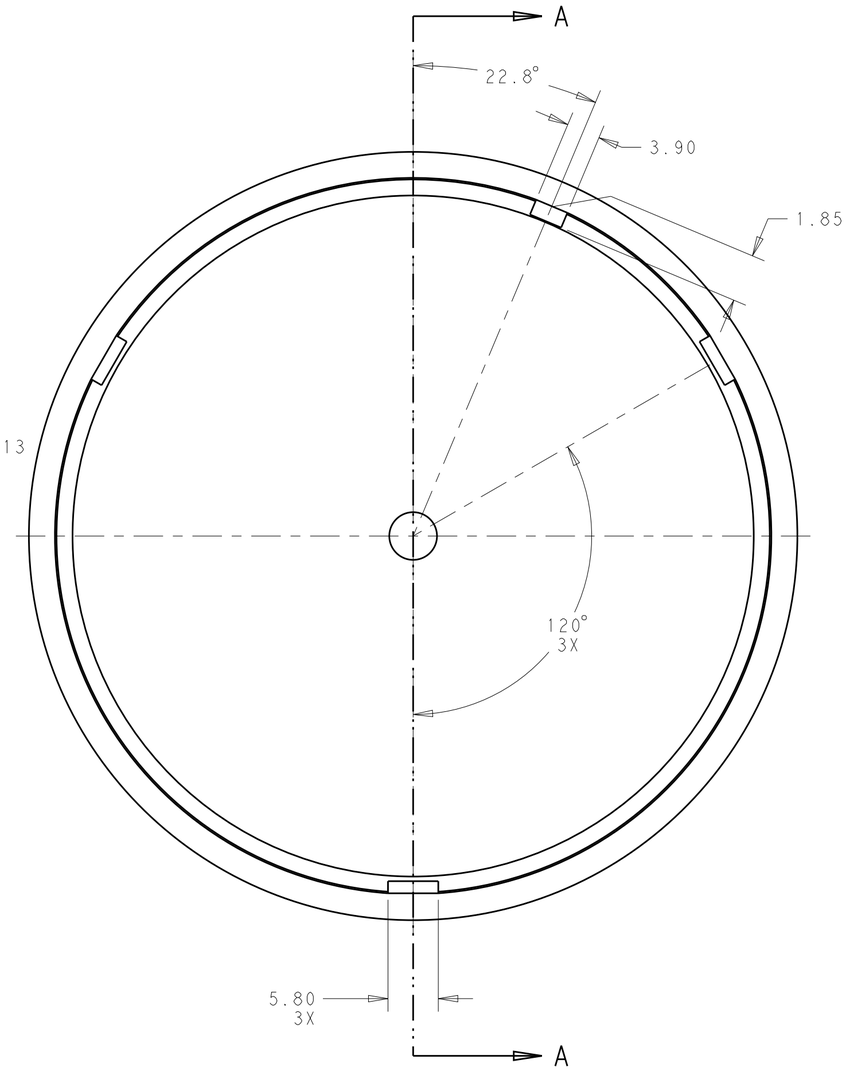

MATING COVER DIMENSIONS
FOR
81MM DIAMETER BASES

(2336396-2, 1-2336396-2)

THIS DRAWING IS A CONTROLLED DOCUMENT.

DIMENSIONS: mm

TOLERANCES UNLESS OTHERWISE SPECIFIED:

0 PLC	±-
1 PLC	±0.2
2 PLC	±0.13
3 PLC	±-
4 PLC	±-
ANGLES	±3°

MATERIAL - -

FINISH - -

DWN J.SHAFFER 03MAY2018
CHK M.MOSTOLLER 03MAY2018
APVD -
PRODUCT SPEC 108-32125
APPLICATION SPEC 114-32159
WEIGHT -

TE Connectivity

NAME BASE ASSEMBLY, LIGHT CONTROLLER, SLEEVE COMPATIBLE

SIZE	CAGE CODE	DRAWING NO	RESTRICTED TO
A2	-	C-2336396	-

CUSTOMER DRAWING | SCALE 2:1 | SHEET 5 OF 5 | REV A2

ООО «ЛайфЭлектроникс» “LifeElectronics” LLC

ИНН 7805602321 КПП 780501001 Р/С 40702810122510004610 ФАКБ "АБСОЛЮТ БАНК" (ЗАО) в г.Санкт-Петербурге К/С 30101810900000000703 БИК 044030703

Компания «Life Electronics» занимается поставками электронных компонентов импортного и отечественного производства от производителей и со складов крупных дистрибьюторов Европы, Америки и Азии.

С конца 2013 года компания активно расширяет линейку поставок компонентов по направлению коаксиальный кабель, кварцевые генераторы и конденсаторы (керамические, пленочные, электролитические), за счёт заключения дистрибьюторских договоров

Мы предлагаем:

- *Конкурентоспособные цены и скидки постоянным клиентам.*
- *Специальные условия для постоянных клиентов.*
- *Подбор аналогов.*
- *Поставку компонентов в любых объемах, удовлетворяющих вашим потребностям.*

- *Приемлемые сроки поставки, возможна ускоренная поставка.*
- *Доставку товара в любую точку России и стран СНГ.*
- *Комплексную поставку.*
- *Работу по проектам и поставку образцов.*
- *Формирование склада под заказчика.*

- *Сертификаты соответствия на поставляемую продукцию (по желанию клиента).*
- *Тестирование поставляемой продукции.*
- *Поставку компонентов, требующих военную и космическую приемку.*
- *Входной контроль качества.*
- *Наличие сертификата ISO.*

В составе нашей компании организован Конструкторский отдел, призванный помогать разработчикам, и инженерам.

Конструкторский отдел помогает осуществить:

- *Регистрацию проекта у производителя компонентов.*
- *Техническую поддержку проекта.*
- *Защиту от снятия компонента с производства.*
- *Оценку стоимости проекта по компонентам.*
- *Изготовление тестовой платы монтаж и пусконаладочные работы.*

Тел: +7 (812) 336 43 04 (многоканальный)
Email: org@lifeelectronics.ru

www.lifeelectronics.ru