74HC4066; 74HCT4066

Quad single-pole single-throw analog switch

Rev. 7 — 2 April 2013 Product data sheet

1. General description

The 74HC4066; 74HCT4066 is a quad single pole, single throw analog switch. Each switch features two input/output terminals (nY and nZ) and an active HIGH enable input (nE). When nE is LOW, the analog switch is turned off. Inputs include clamp diodes. This enables the use of current limiting resistors to interface inputs to voltages in excess of V_{CC}.

2. Features and benefits

- Input levels nE inputs:
  - For 74HC4066: CMOS level
  - For 74HCT4066: TTL level
- Low ON resistance:
  - 50 Ω (typical) at V_{CC} = 4.5 V
  - 45 Ω (typical) at V_{CC} = 6.0 V
  - 35 Ω (typical) at V_{CC} = 9.0 V
- Specified in compliance with JEDEC standard no. 7A
- ESD protection:
  - HBM JESD22-A114F exceeds 2000 V
  - MM JESD22-A115-A exceeds 200 V
- Multiple package options
- Specified from −40 °C to +85 °C and −40 °C to +125 °C

3. Ordering information

Table 1. Ordering information

Type number	Package			
	Temperature range	Name	Description	Version
74HC4066N	–40 °C to +125 °C	DIP14	plastic dual in-line package; 14 leads (300 mil)	SOT27-1
74HCT4066N				
74HC4066D	–40 °C to +125 °C	SO14	plastic small outline package; 14 leads; body width 3.9 mm	SOT108-1
74HCT4066D				
74HC4066DB	–40 °C to +125 °C	SSOP14	plastic shrink small outline package; 14 leads; body width 5.3 mm	SOT337-1
74HCT4066DB				
74HC4066PW	–40 °C to +125 °C	TSSOP14	plastic thin shrink small outline package; 14 leads; body width 4.4 mm	SOT402-1
74HCT4066PW				
74HC4066BQ	–40 °C to +125 °C	DHVQFN14	plastic dual in-line compatible thermal enhanced very thin quad flat package; no leads; 14 terminals; body 2.5 × 3 × 0.85 mm	SOT762-1
74HCT4066BQ				

4. Functional diagram

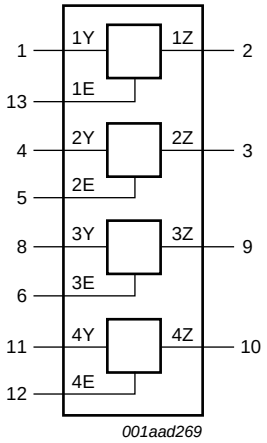

Fig 1. Logic symbol

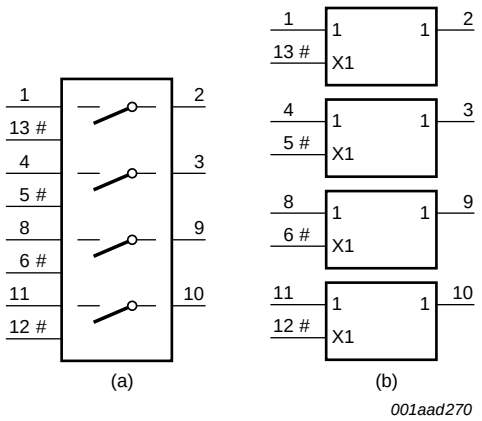

Fig 2. IEC logic symbol

All information provided in this document is subject to legal disclaimers.

© NXP B.V. 2013. All rights reserved.

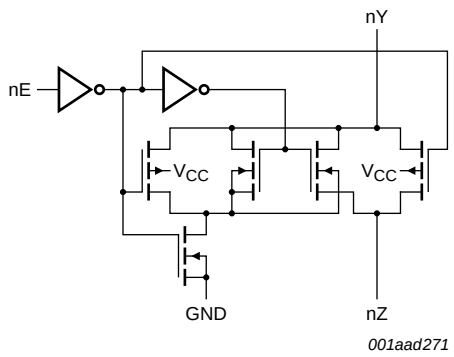

Fig 3. Schematic diagram (one switch)

5. Pinning information

5.1 Pinning

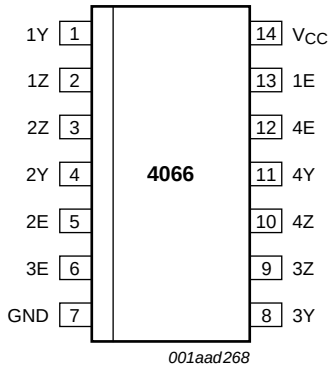

Fig 4. Pin configuration for DIP14, SO14, SSOP14 and TSSOP14

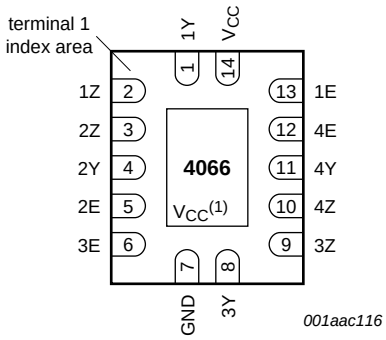

Transparent top view

(1) This is not a supply pin. The substrate is attached to this pad using conductive die attach material. There is no electrical or mechanical requirement to solder this pad. However, if it is soldered, the solder land should remain floating or be connected to VCC.

Fig 5. Pin configuration for DHVQFN14

5.2 Pin description

Table 2. Pin description

Symbol	Pin	Description
1Z, 2Z, 3Z, 4Z	2, 3, 9, 10	independent input or output
1Y, 2Y, 3Y, 4Y	1, 4, 8, 11	independent input or output
GND	7	ground (0 V)
1E, 2E, 3E, 4E	13, 5, 6, 12	enable input (active HIGH)
V_{CC}	14	supply voltage

All information provided in this document is subject to legal disclaimers.

© NXP B.V. 2013. All rights reserved.

6. Functional description

Table 3. Function table[1]

Input nE	Switch
L	OFF
H	ON

[1] H = HIGH voltage level;
L = LOW voltage level.

7. Limiting values

Table 4. Limiting values

In accordance with the Absolute Maximum Rating System (IEC 60134). Voltages are referenced to GND (ground = 0 V).

Symbol	Parameter	Conditions		Min	Max	Unit
V_{CC}	supply voltage			–0.5	+11.0	V
I_{IK}	input clamping current	V_I < –0.5 V or V_I > V_{CC} + 0.5 V		-	±20	mA
I_{SK}	switch clamping current	V_{SW} < –0.5 V or V_{SW} > V_{CC} + 0.5 V		-	±20	mA
I_{SW}	switch current	V_{SW} = –0.5 V to V_{CC} + 0.5 V	[1]	-	±25	mA
I_{CC}	supply current			-	50	mA
I_{GND}	ground current			-	–50	mA
T_{stg}	storage temperature			–65	+150	°C
P_{tot}	total power dissipation	T_{amb} = –40 °C to +125 °C	[2]			
		DIP14 package			-	750
		SO14, (T)SSOP14 and DHVQFN14 packages			-	500
P	power dissipation	per switch		-	100	mW

[1] To avoid drawing V_{CC} current out of terminal Z, when switch current flows in terminals Yn, the voltage drop across the bidirectional switch must not exceed 0.4 V. If the switch current flows into terminal Z, no V_{CC} current will flow out of terminals Yn. In this case there is no limit for the voltage drop across the switch, but the voltages at Yn and Z may not exceed V_{CC} or GND.

[2] For DIP14 package: P_{tot} derates linearly with 12 mW/K above 70 °C.
For SO14 package: P_{tot} derates linearly with 8 mW/K above 70 °C.
For (T)SSOP14 packages: P_{tot} derates linearly with 5.5 mW/K above 60 °C.
For DHVQFN14 packages: P_{tot} derates linearly with 4.5 mW/K above 60 °C.

All information provided in this document is subject to legal disclaimers.

© NXP B.V. 2013. All rights reserved.

8. Recommended operating conditions

Table 5. Recommended operating conditions

Symbol	Parameter	Conditions	74HC4066			74HCT4066			Unit
			Min	Typ	Max	Min	Typ	Max	
V_{CC}	supply voltage		2.0	5.0	10.0	4.5	5.0	5.5	V
V_I	input voltage		GND	-	V_{CC}	GND	-	V_{CC}	V
V_{SW}	switch voltage		GND	-	V_{CC}	GND	-	V_{CC}	V
T_{amb}	ambient temperature		–40	+25	+125	–40	+25	+125	°C
$\Delta t/\Delta V$	input transition rise and fall rate	V_{CC} = 2.0 V	-	-	625	-	-	-	ns/V
		V_{CC} = 4.5 V	-	1.67	139	-	1.67	139	ns/V
		V_{CC} = 6.0 V	-	-	83	-	-	-	ns/V
		V_{CC} = 10.0 V	-	-	35	-	-	-	ns/V

9. Static characteristics

Table 6. R_{ON} resistance per switch for types 74HC4066 and 74HCT4066

$V_I = V_{IH}$ or V_{IL}; for test circuit see Figure 6.
V_{is} is the input voltage at a Yn or Z terminal, whichever is assigned as an input.
V_{os} is the output voltage at a Yn or Z terminal, whichever is assigned as an output.
For 74HC4066: V_{CC} – GND = 2.0 V, 4.5 V, 6.0 V and 9.0 V.
For 74HCT4066: V_{CC} – GND = 4.5 V.

Symbol	Parameter	Conditions	–40 °C to +85 °C			–40 °C to +125 °C		Unit
			Min	Typ[1]	Max	Min	Max	
$R_{ON(peak)}$	ON resistance (peak)	V_{is} = V_{CC} to GND						
		V_{CC} = 2.0 V; I_{SW} = 100 μA [2]	-	-	-	-	-	Ω
		V_{CC} = 4.5 V; I_{SW} = 1000 μA	-	54	-	118	142	Ω
		V_{CC} = 6.0 V; I_{SW} = 1000 μA	-	42	-	105	126	Ω
		V_{CC} = 9.0 V; I_{SW} = 1000 μA	-	32	-	88	105	Ω
$R_{ON(rail)}$	ON resistance (rail)	V_{is} = GND						
		V_{CC} = 2.0 V; I_{SW} = 100 μA [2]	-	80	-	-	-	Ω
		V_{CC} = 4.5 V; I_{SW} = 1000 μA	-	35	-	95	115	Ω
		V_{CC} = 6.0 V; I_{SW} = 1000 μA	-	27	-	82	100	Ω
		V_{CC} = 9.0 V; I_{SW} = 1000 μA	-	20	-	70	85	Ω
		V_{is} = V_{CC}						
		V_{CC} = 2.0 V; I_{SW} = 100 μA [2]	-	100	-	-	-	Ω
		V_{CC} = 4.5 V; I_{SW} = 1000 μA	-	42	-	106	128	Ω
		V_{CC} = 6.0 V; I_{SW} = 1000 μA	-	35	-	94	113	Ω
		V_{CC} = 9.0 V; I_{SW} = 1000 μA	-	20	-	78	95	Ω

All information provided in this document is subject to legal disclaimers.

© NXP B.V. 2013. All rights reserved.

Table 6. R_{ON} resistance per switch for types 74HC4066 and 74HCT4066 *...continued*

$V_I = V_{IH}$ or V_{IL}; for test circuit see Figure 6.
V_{is} is the input voltage at a Yn or Z terminal, whichever is assigned as an input.
V_{os} is the output voltage at a Yn or Z terminal, whichever is assigned as an output.
For 74HC4066: V_{CC} − GND = 2.0 V, 4.5 V, 6.0 V and 9.0 V.
For 74HCT4066: V_{CC} − GND = 4.5 V.

Symbol	Parameter	Conditions		–40 °C to +85 °C			–40 °C to +125 °C		Unit
				Min	Typ[1]	Max	Min	Max	
ΔR_{ON}	ON resistance mismatch between channels	V_{is} = V_{CC} to GND							
		V_{CC} = 2.0 V	[2]	-	-	-	-	-	Ω
		V_{CC} = 4.5 V		-	5	-	-	-	Ω
		V_{CC} = 6.0 V		-	4	-	-	-	Ω
		V_{CC} = 9.0 V		-	3	-	-	-	Ω

[1] Typical values are measured at T_{amb} = 25 °C.

[2] At supply voltages (V_{CC} − GND) approaching 2 V, the analog switch ON resistance becomes extremely non-linear. Therefore it is recommended that these devices be used to transmit digital signals only, when using these supply voltages.

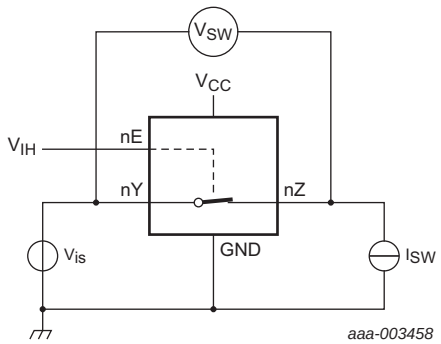

V_{is} = 0 V to V_{CC}

$$R_{ON} = \frac{V_{SW}}{I_{SW}}$$

Fig 6. Test circuit for measuring R_{ON}

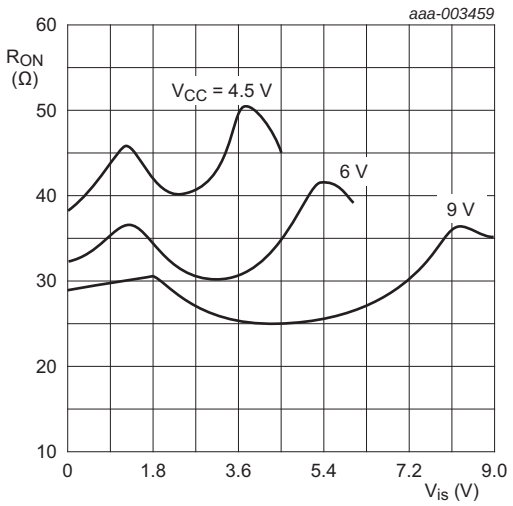

V_{is} = 0 V to V_{CC}

Fig 7. Typical R_{ON} as a function of input voltage V_{is}

All information provided in this document is subject to legal disclaimers.

© NXP B.V. 2013. All rights reserved.

Table 7. Static characteristics 74HC4066

At recommended operating conditions; voltages are referenced to GND (ground = 0 V).
V_{is} is the input voltage at a Yn or Z terminal, whichever is assigned as an input.
V_{os} is the output voltage at a Yn or Z terminal, whichever is assigned as an output.

Symbol	Parameter	Conditions	Min	Typ[1]	Max	Unit
T_{amb} = –40 °C to +85 °C						
V_{IH}	HIGH-level input voltage	V_{CC} = 2.0 V	1.5	1.2	-	V
		V_{CC} = 4.5 V	3.15	2.4	-	V
		V_{CC} = 6.0 V	4.2	3.2	-	V
		V_{CC} = 9.0 V	6.3	4.7	-	V
V_{IL}	LOW-level input voltage	V_{CC} = 2.0 V	-	0.8	0.5	V
		V_{CC} = 4.5 V	-	2.1	1.35	V
		V_{CC} = 6.0 V	-	2.8	1.80	V
		V_{CC} = 9.0 V	-	4.3	2.70	V
I_I	input leakage current	$V_I = V_{CC}$ or GND				
		V_{CC} = 6.0 V	-	-	±1.0	μA
		V_{CC} = 10.0 V	-	-	±2.0	μA
$I_{S(OFF)}$	OFF-state leakage current	V_{CC} = 10.0 V; $V_I = V_{IH}$ or V_{IL}; $\|V_{SW}\| = V_{CC} - GND$; see Figure 8				
		per channel	-	-	±1.0	μA
$I_{S(ON)}$	ON-state leakage current	V_{CC} = 10.0 V; $V_I = V_{IH}$ or V_{IL}; $\|V_{SW}\| = V_{CC} - GND$; see Figure 9	-	-	±1.0	μA
I_{CC}	supply current	$V_I = V_{CC}$ or GND; V_{is} = GND or V_{CC}; $V_{os} = V_{CC}$ or GND				
		V_{CC} = 6.0 V	-	-	20.0	μA
		V_{CC} = 10.0 V	-	-	40.0	μA
C_I	input capacitance		-	3.5	-	pF
C_{sw}	switch capacitance		-	8	-	pF
T_{amb} = –40 °C to +125 °C						
V_{IH}	HIGH-level input voltage	V_{CC} = 2.0 V	1.5	-	-	V
		V_{CC} = 4.5 V	3.15	-	-	V
		V_{CC} = 6.0 V	4.2	-	-	V
		V_{CC} = 9.0 V	6.3	-	-	V
V_{IL}	LOW-level input voltage	V_{CC} = 2.0 V	-	-	0.50	V
		V_{CC} = 4.5 V	-	-	1.35	V
		V_{CC} = 6.0 V	-	-	1.80	V
		V_{CC} = 9.0 V	-	-	2.70	V
I_I	input leakage current	$V_I = V_{CC}$ or GND				
		V_{CC} = 6.0 V	-	-	±1.0	μA
		V_{CC} = 10.0 V	-	-	±2.0	μA
$I_{S(OFF)}$	OFF-state leakage current	V_{CC} = 10.0 V; $V_I = V_{IH}$ or V_{IL}; $\|V_{SW}\| = V_{CC} - GND$; see Figure 8				
		per channel	-	-	±1.0	μA
$I_{S(ON)}$	ON-state leakage current	V_{CC} = 10.0 V; $V_I = V_{IH}$ or V_{IL}; $\|V_{SW}\| = V_{CC} - GND$; see Figure 9	-	-	±1.0	μA

All information provided in this document is subject to legal disclaimers.

© NXP B.V. 2013. All rights reserved.

Table 7. Static characteristics 74HC4066 *...continued*

At recommended operating conditions; voltages are referenced to GND (ground = 0 V).
V_{is} is the input voltage at a Yn or Z terminal, whichever is assigned as an input.
V_{os} is the output voltage at a Yn or Z terminal, whichever is assigned as an output.

Symbol	Parameter	Conditions	Min	Typ[1]	Max	Unit
I_{CC}	supply current	$V_I = V_{CC}$ or GND; V_{is} = GND or V_{CC}; $V_{os} = V_{CC}$ or GND				
		V_{CC} = 6.0 V	-	-	40	μA
		V_{CC} = 10.0 V	-	-	80	μA

[1] Typical values are measured at T_{amb} = 25 °C.

Table 8. Static characteristics 74HCT4066

At recommended operating conditions; voltages are referenced to GND (ground = 0 V).
V_{is} is the input voltage at a Yn or Z terminal, whichever is assigned as an input.
V_{os} is the output voltage at a Yn or Z terminal, whichever is assigned as an output.

Symbol	Parameter	Conditions	Min	Typ[1]	Max	Unit
T_{amb} = –40 °C to +85 °C						
V_{IH}	HIGH-level input voltage	V_{CC} = 4.5 V to 5.5 V	2.0	1.6	-	V
V_{IL}	LOW-level input voltage	V_{CC} = 4.5 V to 5.5 V	-	1.2	0.8	V
I_I	input leakage current	$V_I = V_{CC}$ or GND; V_{CC} = 5.5 V	-	-	±1.0	μA
$I_{S(OFF)}$	OFF-state leakage current	V_{CC} = 5.5 V; $V_I = V_{IH}$ or V_{IL}; $\|V_{SW}\| = V_{CC}$ – GND; see Figure 8				
		per channel	-	-	±1.0	μA
$I_{S(ON)}$	ON-state leakage current	V_{CC} = 5.5 V; $V_I = V_{IH}$ or V_{IL}; $\|V_{SW}\| = V_{CC}$ – GND; see Figure 9	-	-	±1.0	μA
I_{CC}	supply current	$V_I = V_{CC}$ or GND; V_{is} = GND or V_{CC}; $V_{os} = V_{CC}$ or GND; V_{CC} = 4.5 V to 5.5 V	-	-	20.0	μA
ΔI_{CC}	additional supply current	per input pin; $V_I = V_{CC}$ – 2.1 V; other inputs at V_{CC} or GND; V_{CC} = 4.5 V to 5.5 V	-	100	450	μA
C_I	input capacitance		-	3.5	-	pF
C_{sw}	switch capacitance		-	8	-	pF
T_{amb} = –40 °C to +125 °C						
V_{IH}	HIGH-level input voltage	V_{CC} = 4.5 V to 5.5 V	2.0	-	-	V
V_{IL}	LOW-level input voltage	V_{CC} = 4.5 V to 5.5 V	-	-	0.8	V
I_I	input leakage current	$V_I = V_{CC}$ or GND; V_{CC} = 5.5 V	-	-	±1.0	μA
$I_{S(OFF)}$	OFF-state leakage current	V_{CC} = 5.5 V; $V_I = V_{IH}$ or V_{IL}; $\|V_{SW}\| = V_{CC}$ – GND; see Figure 8				
		per channel	-	-	±1.0	μA
$I_{S(ON)}$	ON-state leakage current	V_{CC} = 5.5 V; $V_I = V_{IH}$ or V_{IL}; $\|V_{SW}\| = V_{CC}$ – GND; see Figure 9	-	-	±1.0	μA
I_{CC}	supply current	$V_I = V_{CC}$ or GND; V_{is} = GND or V_{CC}; $V_{os} = V_{CC}$ or GND; V_{CC} = 4.5 V to 5.5 V	-	-	40	μA
ΔI_{CC}	additional supply current	per input pin; $V_I = V_{CC}$ – 2.1 V; other inputs at V_{CC} or GND; V_{CC} = 4.5 V to 5.5 V	-	-	490	μA

[1] Typical values are measured at T_{amb} = 25 °C.

All information provided in this document is subject to legal disclaimers.

© NXP B.V. 2013. All rights reserved.

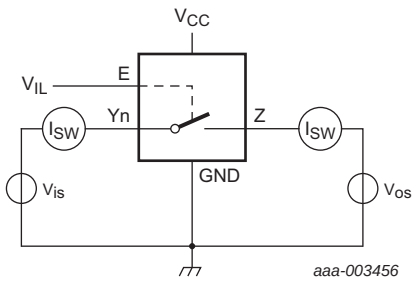

$V_{is} = V_{CC}$ and $V_{os} = GND$

$V_{is} = GND$ and $V_{os} = V_{CC}$

Fig 8. Test circuit for measuring OFF-state leakage current

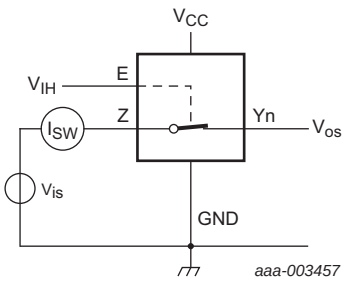

$V_{is} = V_{CC}$ and V_{os} = open

$V_{is} = GND$ and V_{os} = open

Fig 9. Test circuit for measuring ON-state leakage current

10. Dynamic characteristics

Table 9. Dynamic characteristics 74HC4066

GND = 0 V; $t_r = t_f = 6$ ns; $C_L = 50$ pF unless specified otherwise; for test circuit see Figure 12.
V_{is} is the input voltage at a Yn or Z terminal, whichever is assigned as an input.
V_{os} is the output voltage at a Yn or Z terminal, whichever is assigned as an output.

Symbol	Parameter	Conditions		–40 °C to +85 °C			–40 °C to +125 °C		Unit
				Min	Typ[1]	Max	Min	Max	
t_{pd}	propagation delay	nY to nZ or nZ to nY; $R_L = \infty\ \Omega$; see Figure 10	[2]						
		V_{CC} = 2.0 V		-	8	75	-	90	ns
		V_{CC} = 4.5 V		-	3	15	-	18	ns
		V_{CC} = 6.0 V		-	2	13	-	15	ns
		V_{CC} = 9.0 V		-	2	10	-	12	ns
t_{off}	turn-off time	nE to nY or nZ; see Figure 11	[4]						
		V_{CC} = 2.0 V		-	44	190	-	225	ns
		V_{CC} = 4.5 V		-	16	38	-	45	ns
		V_{CC} = 5.0 V; C_L = 15 pF		-	13	-	-	-	ns
		V_{CC} = 6.0 V		-	13	33	-	38	ns
		V_{CC} = 9.0 V		-	16	26	-	30	ns
t_{on}	turn-on time	nE to nY or nZ; see Figure 11	[3]						
		V_{CC} = 2.0 V		-	36	125	-	150	ns
		V_{CC} = 4.5 V		-	13	25	-	30	ns
		V_{CC} = 5.0 V; C_L = 15 pF		-	11	-	-	-	ns
		V_{CC} = 6.0 V		-	10	21	-	26	ns
		V_{CC} = 9.0 V		-	8	16	-	20	ns
C_{PD}	power dissipation capacitance	per switch; V_I = GND to V_{CC}	[5]	11		-	-	-	pF

[1] Typical values are measured at T_{amb} = 25 °C.

[2] t_{pd} is the same as t_{PHL} and t_{PLH}.

[3] t_{on} is the same as t_{PHZ} and t_{PLZ}.

All information provided in this document is subject to legal disclaimers.

© NXP B.V. 2013. All rights reserved.

[4] t_{off} is the same as t_{PZH} and t_{PZL}.

[5] C_{PD} is used to determine the dynamic power dissipation (P_D in μW).
$P_D = C_{PD} \times V_{CC}^2 \times f_i + \Sigma\{(C_L + C_{sw}) \times V_{CC}^2 \times f_o\}$ where:
f_i = input frequency in MHz;
f_o = output frequency in MHz;
$\Sigma\{(C_L + C_{sw}) \times V_{CC}^2 \times f_o\}$ = sum of outputs;
C_L = output load capacitance in pF;
C_{sw} = switch capacitance in pF;
V_{CC} = supply voltage in V.

Table 10. Dynamic characteristics 74HCT4066

GND = 0 V; $t_r = t_f$ = 6 ns; C_L = 50 pF unless specified otherwise; for test circuit see Figure 12.
V_{is} is the input voltage at a Yn or Z terminal, whichever is assigned as an input.
V_{os} is the output voltage at a Yn or Z terminal, whichever is assigned as an output.

Symbol	Parameter	Conditions		–40 °C to +85 °C			–40 °C to +125 °C		Unit
				Min	Typ[1]	Max	Min	Max	
t_{pd}	propagation delay	nY to nZ or nZ to nY; $R_L = \infty\ \Omega$; see Figure 10	[2]						
		V_{CC} = 4.5 V		-	3	15	-	18	ns
t_{off}	turn-off time	nE to nY or nZ; see Figure 11	[4]						
		V_{CC} = 4.5 V		-	20	44	-	53	ns
		V_{CC} = 5.0 V; C_L = 15 pF		-	16	-	-	-	ns
t_{on}	turn-on time	nE to nY or nZ; see Figure 11	[3]						
		V_{CC} = 4.5 V		-	12	30	-	36	ns
		V_{CC} = 5.0 V; C_L = 15 pF		-	12	-	-	-	ns
C_{PD}	power dissipation capacitance	per switch; V_I = GND to (V_{CC} – 1.5 V)	[5]	-	12	-	-	-	pF

[1] Typical values are measured at T_{amb} = 25 °C.

[2] t_{pd} is the same as t_{PHL} and t_{PLH}.

[3] t_{on} is the same as t_{PHZ} and t_{PLZ}.

[4] t_{off} is the same as t_{PZH} and t_{PZL}.

[5] C_{PD} is used to determine the dynamic power dissipation (P_D in μW).
$P_D = C_{PD} \times V_{CC}^2 \times f_i + \Sigma\{(C_L + C_{sw}) \times V_{CC}^2 \times f_o\}$ where:
f_i = input frequency in MHz;
f_o = output frequency in MHz;
$\Sigma\{(C_L + C_{sw}) \times V_{CC}^2 \times f_o\}$ = sum of outputs;
C_L = output load capacitance in pF;
C_{sw} = switch capacitance in pF;
V_{CC} = supply voltage in V.

All information provided in this document is subject to legal disclaimers.

© NXP B.V. 2013. All rights reserved.

11. Waveforms

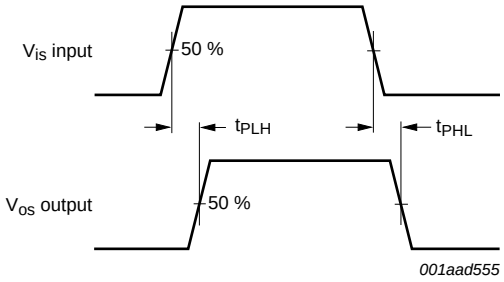

Fig 10. Input (V_{is}) to output (V_{os}) propagation delays

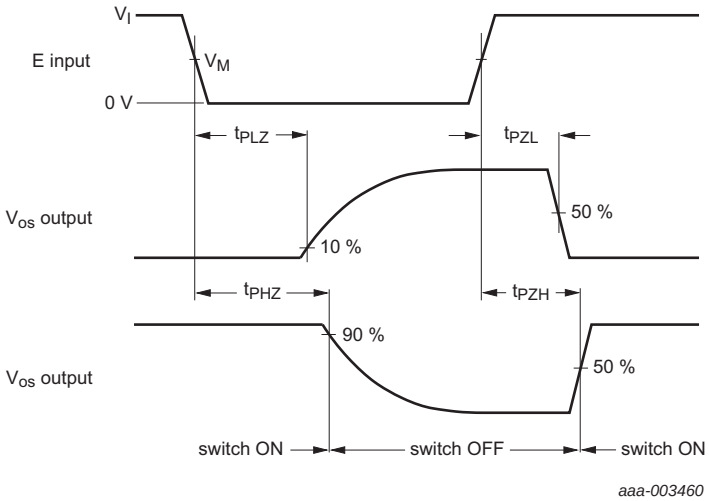

Measurement points are shown in Table 11.

Fig 11. Turn-on and turn-off times

Table 11. Measurement points

Type	V_I	V_M
74HC4066	V_{CC}	$0.5V_{CC}$
74HCT4066	3.0 V	1.3 V

All information provided in this document is subject to legal disclaimers.

© NXP B.V. 2013. All rights reserved.

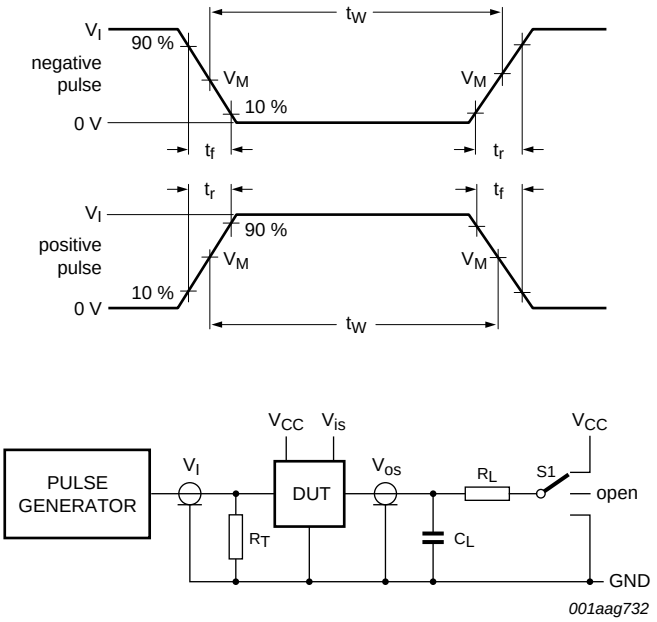

Test data is given in Table 12.

Definitions test circuit:

R_T = Termination resistance should be equal to output impedance Z_o of the pulse generator.

C_L = Load capacitance including jig and probe capacitance.

R_L = Load resistor.

S1 = Test selection switch.

Fig 12. Load circuitry for measuring switching times

Table 12. Test data

Test	Input			Output		S1 position
	Control E	Switch Yn (Z)	t_r, t_f	Switch Z (Yn)		
	V_I[1]	V_{is}		C_L	R_L	
t_{PHL}, t_{PLH}	GND	GND to V_{CC}	6 ns	50 pF	-	open
t_{PHZ}, t_{PZH}	GND to V_{CC}	V_{CC}	6 ns	50 pF, 15 pF	1 kΩ	GND
t_{PLZ}, t_{PZL}	GND to V_{CC}	GND	6 ns	50 pF, 15 pF	1 kΩ	V_{CC}

[1] For 74HCT4066: maximum input voltage V_I = 3.0 V.

All information provided in this document is subject to legal disclaimers.

© NXP B.V. 2013. All rights reserved.

12. Additional dynamic characteristics

Table 13. Additional dynamic characteristics

Recommended conditions and typical values; GND = 0 V; T_{amb} = 25 °C.
V_{is} is the input voltage at a Yn or Z terminal, whichever is assigned as an input.
V_{os} is the output voltage at a Yn or Z terminal, whichever is assigned as an output.

Symbol	Parameter	Conditions		Min	Typ	Max	Unit
THD	total harmonic distortion	f_i = 1 kHz; R_L = 10 kΩ; C_L = 50 pF; see Figure 13					%
		V_{CC} = 4.5 V; V_I = 4.0 V (p-p)		-	0.04	-	%
		V_{CC} = 9.0 V; V_I = 8.0 V (p-p)		-	0.02	-	%
		f_i = 10 kHz; R_L = 10 kΩ; C_L = 50 pF; see Figure 13					
		V_{CC} = 4.5 V; V_I = 4.0 V (p-p)		-	0.12	-	%
		V_{CC} = 9.0 V; V_I = 8.0 V (p-p)		-	0.06	-	%
$f_{(-3dB)}$	−3 dB frequency response	R_L = 50 Ω; C_L = 10 pF; see Figure 15	[2]				
		V_{CC} = 4.5 V		-	180	-	MHz
		V_{CC} = 9.0 V		-	200	-	MHz
α_{iso}	isolation (OFF-state)	R_L = 600 Ω; C_L = 50 pF; f_i = 1 MHz; see Figure 14	[1]				
		V_{CC} = 4.5 V		-	−50	-	dB
		V_{CC} = 9.0 V		-	−50	-	dB
V_{ct}	crosstalk voltage	between digital input and switch (peak to peak value); R_L = 600 Ω; C_L = 50 pF; f_i = 1 MHz; see Figure 16					
		V_{CC} = 4.5 V		-	110	-	mV
		V_{CC} = 9.0 V		-	220	-	mV
Xtalk	crosstalk	between switches; R_L = 600 Ω; C_L = 50 pF; f_i = 1 MHz; see Figure 17	[1]				
		V_{CC} = 4.5 V		-	−60	-	dB
		V_{CC} = 9.0 V		-	−60	-	dB

[1] Adjust input voltage V_{is} to 0 dBm level (0 dBm = 1 mW into 600 Ω).

[2] Adjust input voltage V_{is} to 0 dBm level at V_{os} for f_i = 1 MHz (0 dBm = 1 mW into 50 Ω). After set-up, f_i is increased to obtain a reading of −3 dB at V_{os}.

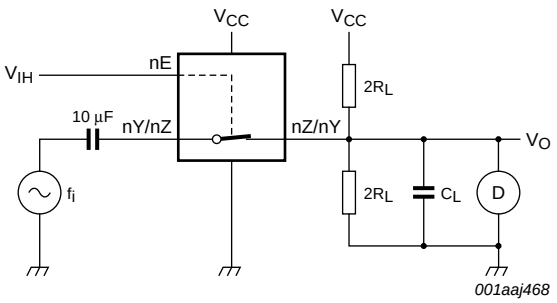

Fig 13. Test circuit for measuring total harmonic distortion

All information provided in this document is subject to legal disclaimers.

© NXP B.V. 2013. All rights reserved.

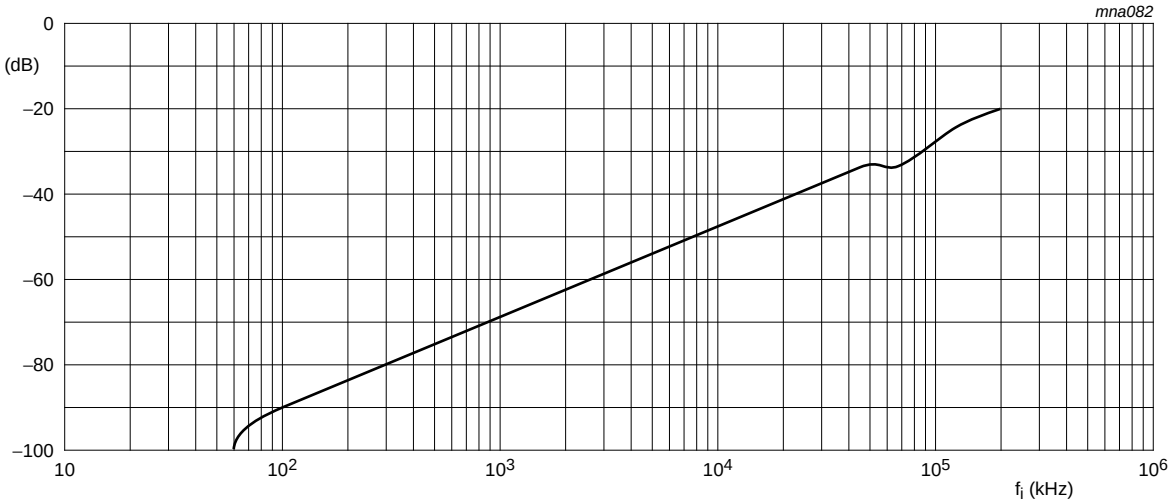

a. Isolation (OFF-state)

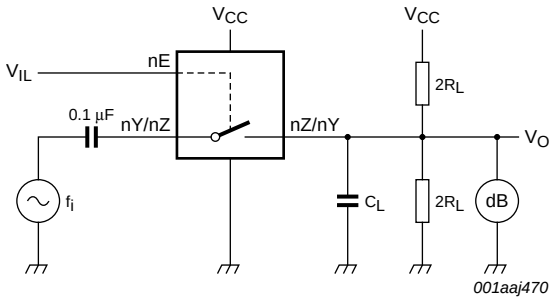

b. Test circuit

V_{CC} = 4.5 V; GND = 0 V; R_L = 600 Ω; R_{source} = 1 kΩ.

Fig 14. Isolation (OFF-state) as a function of frequency

All information provided in this document is subject to legal disclaimers.

© NXP B.V. 2013. All rights reserved.

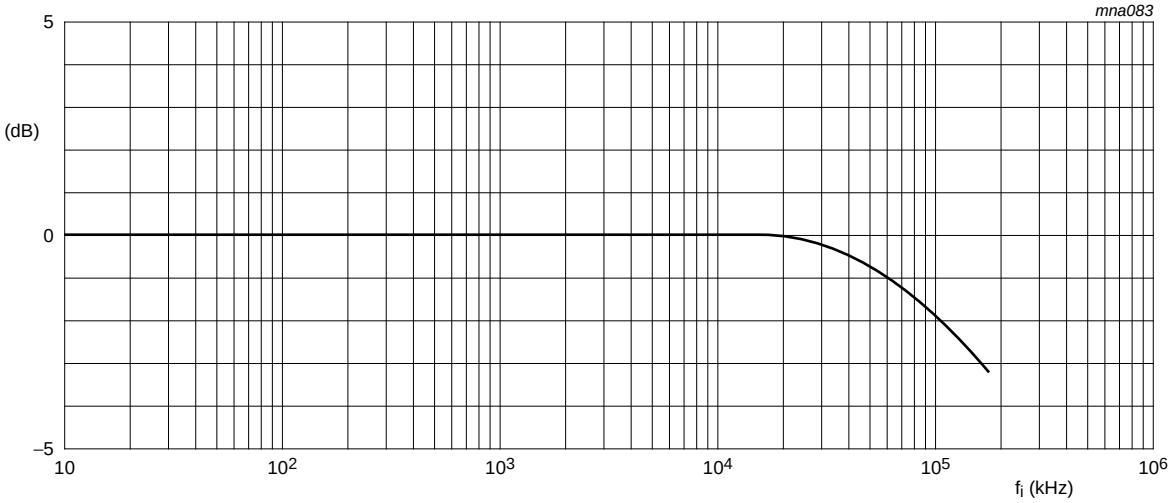

a. Typical −3 dB frequency response

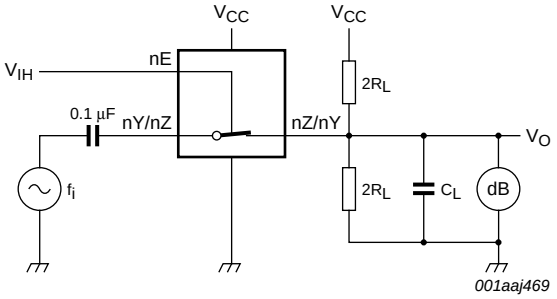

b. Test circuit

V_{CC} = 4.5 V; GND = 0 V; R_L = 50 Ω; R_{source} = 1 kΩ.

Fig 15. –3 dB frequency response

All information provided in this document is subject to legal disclaimers.

© NXP B.V. 2013. All rights reserved.

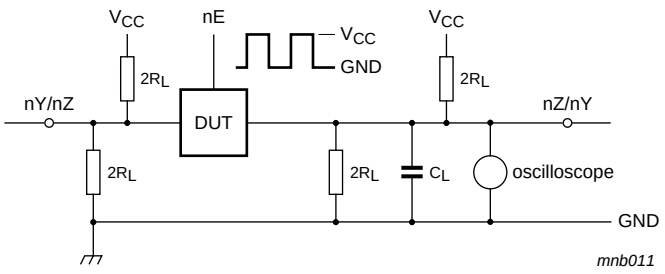

a. Circuit

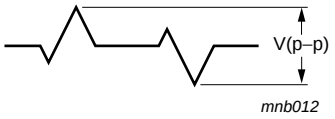

b. Crosstalk voltage

Fig 16. Test circuit for measuring crosstalk voltage (between the digital input and the switch)

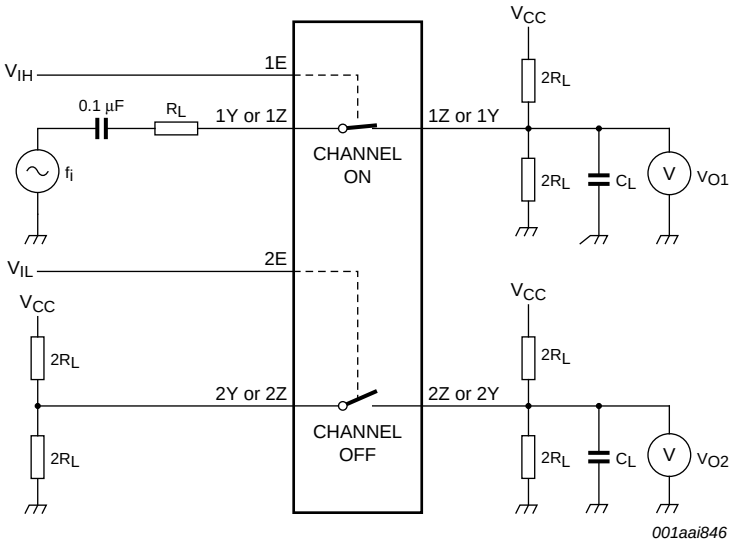

Fig 17. Test circuit for measuring crosstalk (between the switches)

All information provided in this document is subject to legal disclaimers.

© NXP B.V. 2013. All rights reserved.

13. Package outline

DIP14: plastic dual in-line package; 14 leads (300 mil) **SOT27-1**

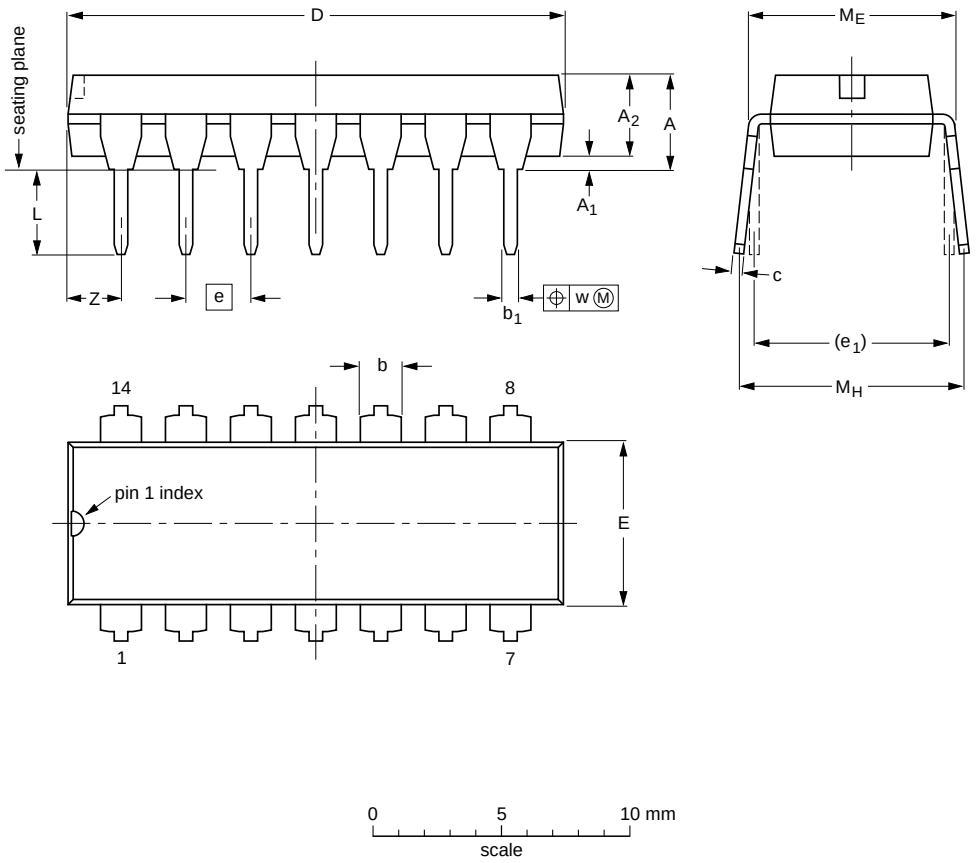

DIMENSIONS (inch dimensions are derived from the original mm dimensions)

UNIT	A max.	A_1 min.	A_2 max.	b	b_1	c	D (1)	E (1)	e	e_1	L	M_E	M_H	w	Z (1) max.
mm	4.2	0.51	3.2	1.73 1.13	0.53 0.38	0.36 0.23	19.50 18.55	6.48 6.20	2.54	7.62	3.60 3.05	8.25 7.80	10.0 8.3	0.254	2.2
inches	0.17	0.02	0.13	0.068 0.044	0.021 0.015	0.014 0.009	0.77 0.73	0.26 0.24	0.1	0.3	0.14 0.12	0.32 0.31	0.39 0.33	0.01	0.087

Note

1. Plastic or metal protrusions of 0.25 mm (0.01 inch) maximum per side are not included.

OUTLINE VERSION	REFERENCES				EUROPEAN PROJECTION	ISSUE DATE
	IEC	JEDEC	JEITA			
SOT27-1	050G04	MO-001	SC-501-14			~~99-12-27~~ 03-02-13

Fig 18. Package outline SOT27-1 (DIP14)

All information provided in this document is subject to legal disclaimers.

© NXP B.V. 2013. All rights reserved.

SO14: plastic small outline package; 14 leads; body width 3.9 mm **SOT108-1**

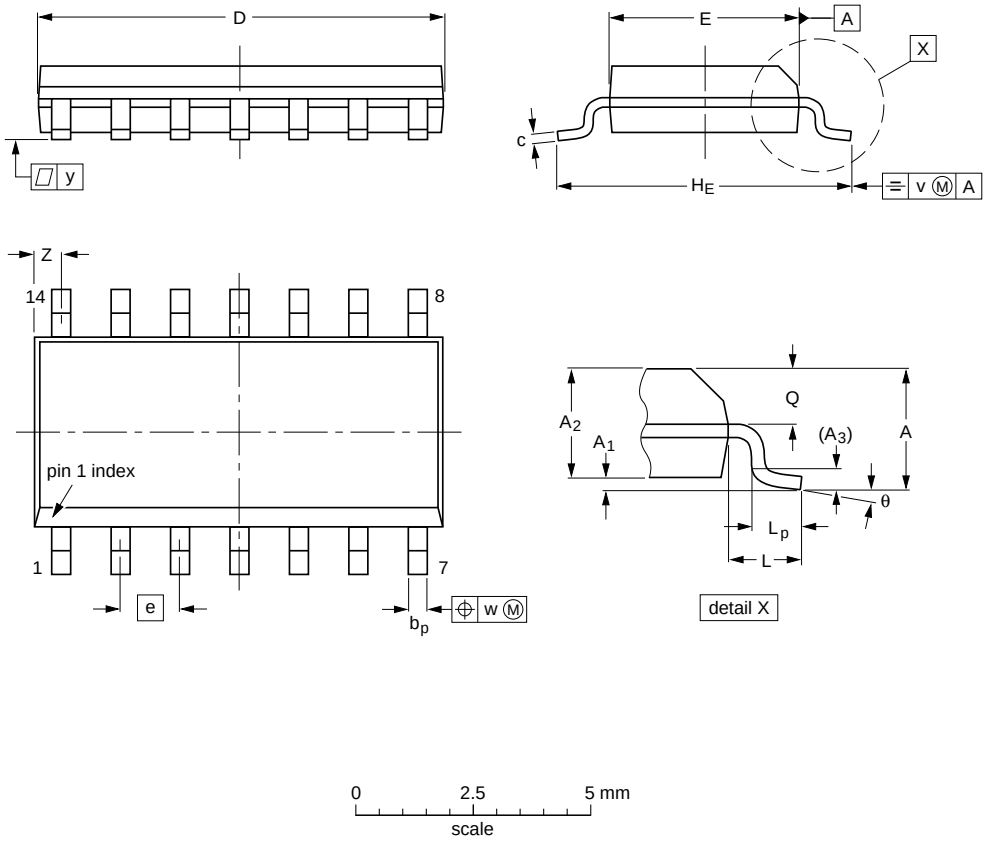

DIMENSIONS (inch dimensions are derived from the original mm dimensions)

UNIT	A max.	A_1	A_2	A_3	b_p	c	D(1)	E(1)	e	H_E	L	L_p	Q	v	w	y	Z(1)	θ
mm	1.75	0.25 0.10	1.45 1.25	0.25	0.49 0.36	0.25 0.19	8.75 8.55	4.0 3.8	1.27	6.2 5.8	1.05	1.0 0.4	0.7 0.6	0.25	0.25	0.1	0.7 0.3	8° 0°
inches	0.069	0.010 0.004	0.057 0.049	0.01	0.019 0.014	0.0100 0.0075	0.35 0.34	0.16 0.15	0.05	0.244 0.228	0.041	0.039 0.016	0.028 0.024	0.01	0.01	0.004	0.028 0.012	

Note

1. Plastic or metal protrusions of 0.15 mm (0.006 inch) maximum per side are not included.

OUTLINE VERSION	REFERENCES				EUROPEAN PROJECTION	ISSUE DATE
	IEC	JEDEC	JEITA			
SOT108-1	076E06	MS-012				~~99-12-27~~ 03-02-19

Fig 19. Package outline SOT108-1 (SO14)

All information provided in this document is subject to legal disclaimers.

© NXP B.V. 2013. All rights reserved.

SSOP14: plastic shrink small outline package; 14 leads; body width 5.3 mm **SOT337-1**

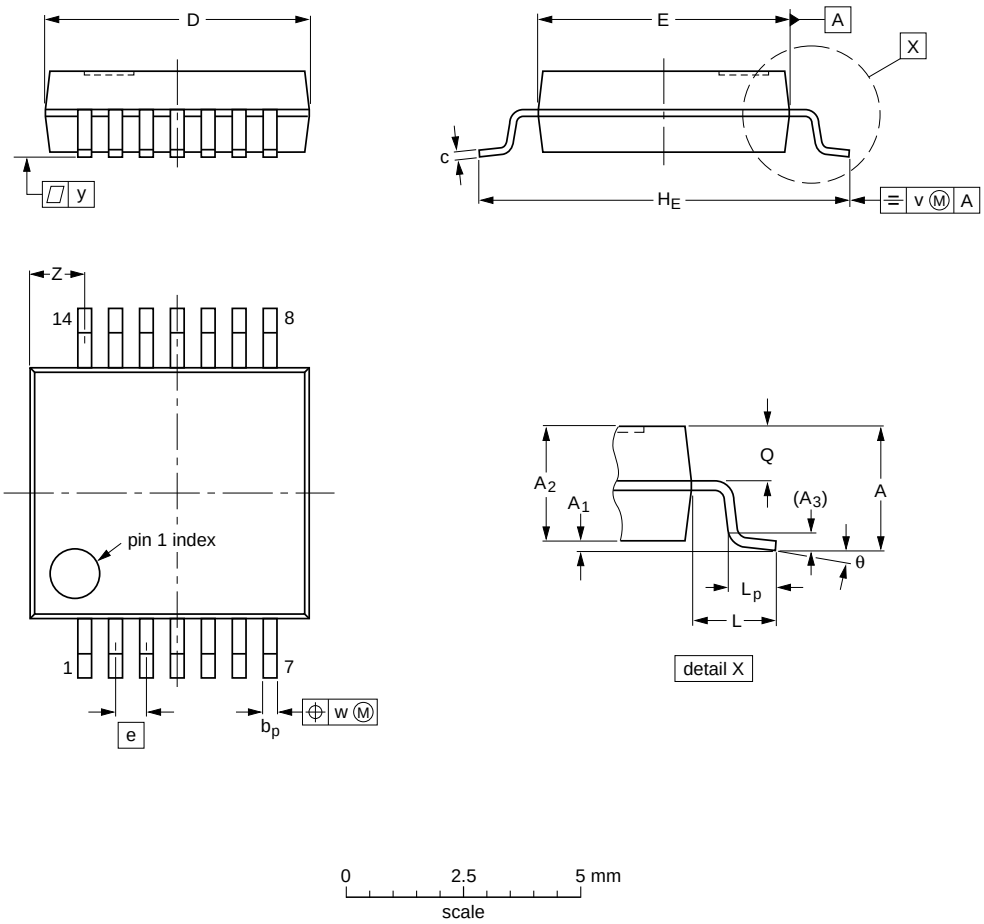

DIMENSIONS (mm are the original dimensions)

UNIT	A max.	A_1	A_2	A_3	b_p	c	D (1)	E (1)	e	H_E	L	L_p	Q	v	w	y	Z (1)	θ
mm	2	0.21 0.05	1.80 1.65	0.25	0.38 0.25	0.20 0.09	6.4 6.0	5.4 5.2	0.65	7.9 7.6	1.25	1.03 0.63	0.9 0.7	0.2	0.13	0.1	1.4 0.9	8° 0°

Note

1. Plastic or metal protrusions of 0.25 mm maximum per side are not included.

OUTLINE VERSION	REFERENCES				EUROPEAN PROJECTION	ISSUE DATE
	IEC	JEDEC	JEITA			
SOT337-1		MO-150				~~99-12-27~~ 03-02-19

Fig 20. Package outline SOT337-1 (SSOP14)

All information provided in this document is subject to legal disclaimers.

© NXP B.V. 2013. All rights reserved.

TSSOP14: plastic thin shrink small outline package; 14 leads; body width 4.4 mm **SOT402-1**

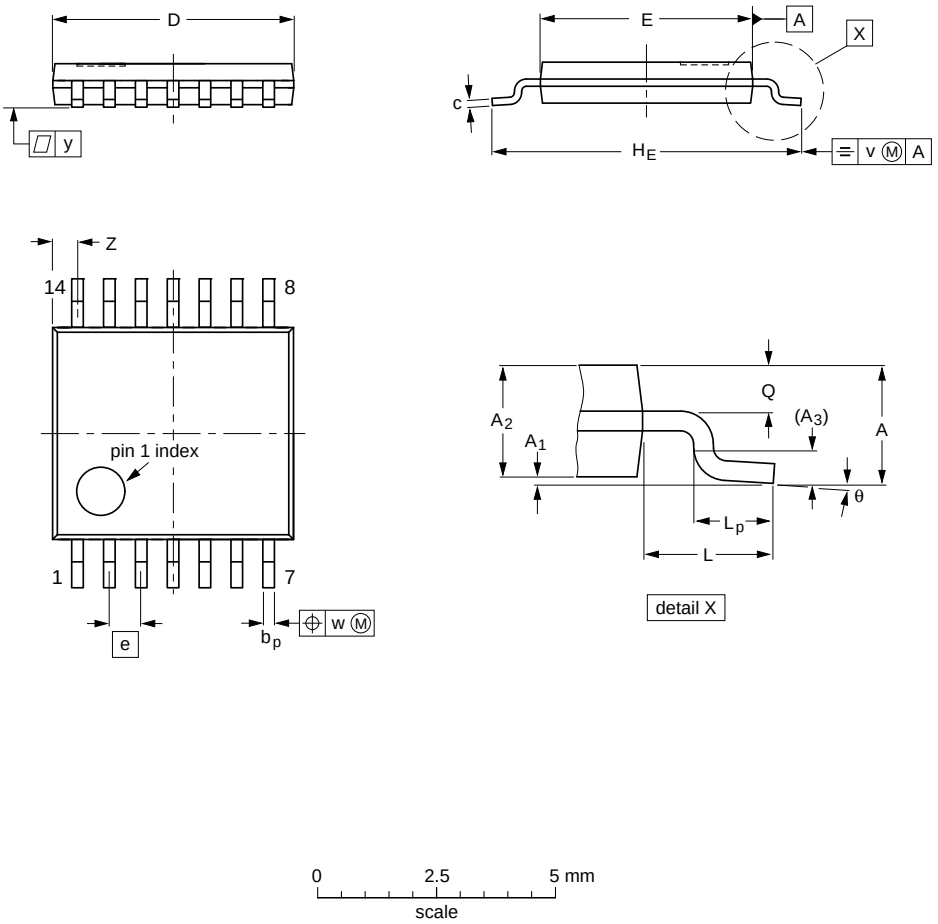

DIMENSIONS (mm are the original dimensions)

UNIT	A max.	A_1	A_2	A_3	b_p	c	D (1)	E (2)	e	H_E	L	L_p	Q	v	w	y	Z (1)	θ
mm	1.1	0.15 0.05	0.95 0.80	0.25	0.30 0.19	0.2 0.1	5.1 4.9	4.5 4.3	0.65	6.6 6.2	1	0.75 0.50	0.4 0.3	0.2	0.13	0.1	0.72 0.38	8° 0°

Notes

1. Plastic or metal protrusions of 0.15 mm maximum per side are not included.
2. Plastic interlead protrusions of 0.25 mm maximum per side are not included.

OUTLINE VERSION	REFERENCES				EUROPEAN PROJECTION	ISSUE DATE
	IEC	JEDEC	JEITA			
SOT402-1		MO-153				~~99-12-27~~ 03-02-18

Fig 21. Package outline SOT402-1 (TSSOP14)

All information provided in this document is subject to legal disclaimers.

© NXP B.V. 2013. All rights reserved.

DHVQFN14: plastic dual in-line compatible thermal enhanced very thin quad flat package; no leads; 14 terminals; body 2.5 x 3 x 0.85 mm **SOT762-1**

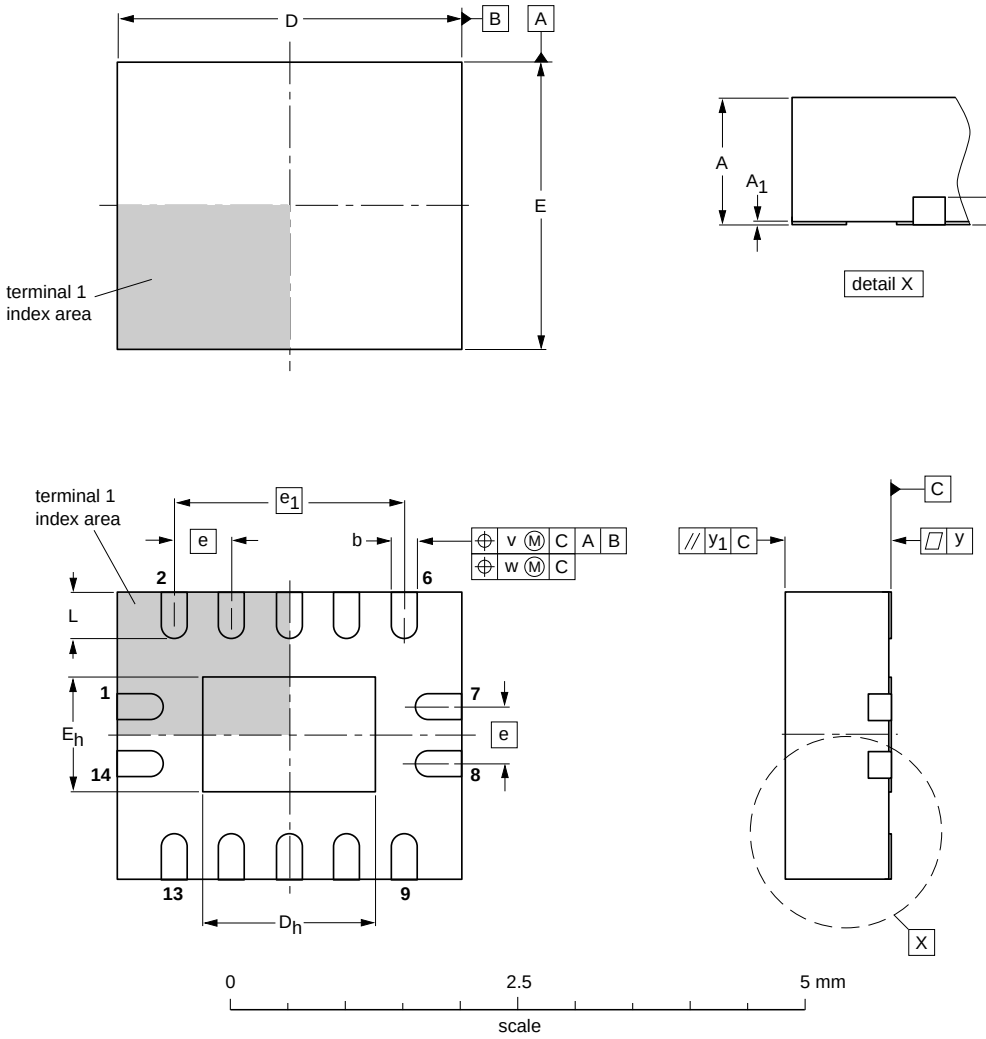

DIMENSIONS (mm are the original dimensions)

UNIT	A(1) max.	A_1	b	c	D(1)	D_h	E(1)	E_h	e	e_1	L	v	w	y	y_1
mm	1	0.05 0.00	0.30 0.18	0.2	3.1 2.9	1.65 1.35	2.6 2.4	1.15 0.85	0.5	2	0.5 0.3	0.1	0.05	0.05	0.1

Note

1. Plastic or metal protrusions of 0.075 mm maximum per side are not included.

OUTLINE VERSION	REFERENCES				EUROPEAN PROJECTION	ISSUE DATE
	IEC	JEDEC	JEITA			
SOT762-1	- - -	MO-241	- - -			~~02-10-17~~ 03-01-27

Fig 22. Package outline SOT762-1 (DHVQFN14)

All information provided in this document is subject to legal disclaimers.

© NXP B.V. 2013. All rights reserved.

14. Abbreviations

Table 14. Abbreviations

Acronym	Description
CMOS	Complementary Metal Oxide Semiconductor
ESD	ElectroStatic Discharge
HBM	Human Body Model
MM	Machine Model

15. Revision history

Table 15. Revision history

Document ID	Release date	Data sheet status	Change notice	Supersedes
74HC_HCT4066 v.7	20130402	Product data sheet	-	74HC_HCT4066 v.6
Modifications:	• Descriptive title corrected (errata). • New general description (errata).			
74HC_HCT4066 v.6	20120718	Product data sheet	-	74HC_HCT4066 v.5
Modifications:	• The format of this data sheet has been redesigned to comply with the new identity guidelines of NXP Semiconductors. • Legal texts have been adapted to the new company name where appropriate.			
74HC_HCT4066 v.5	20041111	Product data sheet	-	74HC_HCT4066 v.4
74HC_HCT4066 v.4	20030617	Product data sheet	-	74HC_HCT4066_CNV v.3
74HC_HCT4067_CNV v.3	19981110	Product data sheet	-	74HC_HCT4066_CNV v.2
74HC_HCT4066_CNV v.2	19981002	Product specification	-	-

All information provided in this document is subject to legal disclaimers.

© NXP B.V. 2013. All rights reserved.

16. Legal information

16.1 Data sheet status

Document status[1][2]	Product status[3]	Definition
Objective [short] data sheet	Development	This document contains data from the objective specification for product development.
Preliminary [short] data sheet	Qualification	This document contains data from the preliminary specification.
Product [short] data sheet	Production	This document contains the product specification.

[1] Please consult the most recently issued document before initiating or completing a design.

[2] The term 'short data sheet' is explained in section "Definitions".

[3] The product status of device(s) described in this document may have changed since this document was published and may differ in case of multiple devices. The latest product status information is available on the Internet at URL http://www.nxp.com.

16.2 Definitions

Draft — The document is a draft version only. The content is still under internal review and subject to formal approval, which may result in modifications or additions. NXP Semiconductors does not give any representations or warranties as to the accuracy or completeness of information included herein and shall have no liability for the consequences of use of such information.

Short data sheet — A short data sheet is an extract from a full data sheet with the same product type number(s) and title. A short data sheet is intended for quick reference only and should not be relied upon to contain detailed and full information. For detailed and full information see the relevant full data sheet, which is available on request via the local NXP Semiconductors sales office. In case of any inconsistency or conflict with the short data sheet, the full data sheet shall prevail.

Product specification — The information and data provided in a Product data sheet shall define the specification of the product as agreed between NXP Semiconductors and its customer, unless NXP Semiconductors and customer have explicitly agreed otherwise in writing. In no event however, shall an agreement be valid in which the NXP Semiconductors product is deemed to offer functions and qualities beyond those described in the Product data sheet.

16.3 Disclaimers

Limited warranty and liability — Information in this document is believed to be accurate and reliable. However, NXP Semiconductors does not give any representations or warranties, expressed or implied, as to the accuracy or completeness of such information and shall have no liability for the consequences of use of such information. NXP Semiconductors takes no responsibility for the content in this document if provided by an information source outside of NXP Semiconductors.

In no event shall NXP Semiconductors be liable for any indirect, incidental, punitive, special or consequential damages (including - without limitation - lost profits, lost savings, business interruption, costs related to the removal or replacement of any products or rework charges) whether or not such damages are based on tort (including negligence), warranty, breach of contract or any other legal theory.

Notwithstanding any damages that customer might incur for any reason whatsoever, NXP Semiconductors' aggregate and cumulative liability towards customer for the products described herein shall be limited in accordance with the *Terms and conditions of commercial sale* of NXP Semiconductors.

Right to make changes — NXP Semiconductors reserves the right to make changes to information published in this document, including without limitation specifications and product descriptions, at any time and without notice. This document supersedes and replaces all information supplied prior to the publication hereof.

Suitability for use — NXP Semiconductors products are not designed, authorized or warranted to be suitable for use in life support, life-critical or safety-critical systems or equipment, nor in applications where failure or malfunction of an NXP Semiconductors product can reasonably be expected to result in personal injury, death or severe property or environmental damage. NXP Semiconductors and its suppliers accept no liability for inclusion and/or use of NXP Semiconductors products in such equipment or applications and therefore such inclusion and/or use is at the customer's own risk.

Applications — Applications that are described herein for any of these products are for illustrative purposes only. NXP Semiconductors makes no representation or warranty that such applications will be suitable for the specified use without further testing or modification.

Customers are responsible for the design and operation of their applications and products using NXP Semiconductors products, and NXP Semiconductors accepts no liability for any assistance with applications or customer product design. It is customer's sole responsibility to determine whether the NXP Semiconductors product is suitable and fit for the customer's applications and products planned, as well as for the planned application and use of customer's third party customer(s). Customers should provide appropriate design and operating safeguards to minimize the risks associated with their applications and products.

NXP Semiconductors does not accept any liability related to any default, damage, costs or problem which is based on any weakness or default in the customer's applications or products, or the application or use by customer's third party customer(s). Customer is responsible for doing all necessary testing for the customer's applications and products using NXP Semiconductors products in order to avoid a default of the applications and the products or of the application or use by customer's third party customer(s). NXP does not accept any liability in this respect.

Limiting values — Stress above one or more limiting values (as defined in the Absolute Maximum Ratings System of IEC 60134) will cause permanent damage to the device. Limiting values are stress ratings only and (proper) operation of the device at these or any other conditions above those given in the Recommended operating conditions section (if present) or the Characteristics sections of this document is not warranted. Constant or repeated exposure to limiting values will permanently and irreversibly affect the quality and reliability of the device.

Terms and conditions of commercial sale — NXP Semiconductors products are sold subject to the general terms and conditions of commercial sale, as published at http://www.nxp.com/profile/terms, unless otherwise agreed in a valid written individual agreement. In case an individual agreement is concluded only the terms and conditions of the respective agreement shall apply. NXP Semiconductors hereby expressly objects to applying the customer's general terms and conditions with regard to the purchase of NXP Semiconductors products by customer.

No offer to sell or license — Nothing in this document may be interpreted or construed as an offer to sell products that is open for acceptance or the grant, conveyance or implication of any license under any copyrights, patents or other industrial or intellectual property rights.

All information provided in this document is subject to legal disclaimers.

© NXP B.V. 2013. All rights reserved.

Export control — This document as well as the item(s) described herein may be subject to export control regulations. Export might require a prior authorization from competent authorities.

Non-automotive qualified products — Unless this data sheet expressly states that this specific NXP Semiconductors product is automotive qualified, the product is not suitable for automotive use. It is neither qualified nor tested in accordance with automotive testing or application requirements. NXP Semiconductors accepts no liability for inclusion and/or use of non-automotive qualified products in automotive equipment or applications.

In the event that customer uses the product for design-in and use in automotive applications to automotive specifications and standards, customer (a) shall use the product without NXP Semiconductors' warranty of the product for such automotive applications, use and specifications, and (b) whenever customer uses the product for automotive applications beyond NXP Semiconductors' specifications such use shall be solely at customer's own risk, and (c) customer fully indemnifies NXP Semiconductors for any liability, damages or failed product claims resulting from customer design and use of the product for automotive applications beyond NXP Semiconductors' standard warranty and NXP Semiconductors' product specifications.

16.4 Trademarks

Notice: All referenced brands, product names, service names and trademarks are the property of their respective owners.

17. Contact information

For more information, please visit: **http://www.nxp.com**

For sales office addresses, please send an email to: **salesaddresses@nxp.com**

All information provided in this document is subject to legal disclaimers.

© NXP B.V. 2013. All rights reserved.

18. Contents

1 General description 1
2 Features and benefits 1
3 Ordering information 2
4 Functional diagram 2
5 Pinning information 3
5.1 Pinning 3
5.2 Pin description 3
6 Functional description 4
7 Limiting values 4
8 Recommended operating conditions 5
9 Static characteristics 5
10 Dynamic characteristics 9
11 Waveforms 11
12 Additional dynamic characteristics 13
13 Package outline 17
14 Abbreviations 22
15 Revision history 22
16 Legal information 23
16.1 Data sheet status 23
16.2 Definitions 23
16.3 Disclaimers 23
16.4 Trademarks 24
17 Contact information 24
18 Contents 25

Please be aware that important notices concerning this document and the product(s) described herein, have been included in section 'Legal information'.

© NXP B.V. 2013. **All rights reserved.**

For more information, please visit: http://www.nxp.com
For sales office addresses, please send an email to: salesaddresses@nxp.com

Date of release: 2 April 2013
Document identifier: 74HC_HCT4066

ООО «ЛайфЭлектроникс» “LifeElectronics” LLC

ИНН 7805602321 КПП 780501001 Р/С 40702810122510004610 ФАКБ "АБСОЛЮТ БАНК" (ЗАО) в г.Санкт-Петербурге К/С 30101810900000000703 БИК 044030703

Компания «Life Electronics» занимается поставками электронных компонентов импортного и отечественного производства от производителей и со складов крупных дистрибьюторов Европы, Америки и Азии.

С конца 2013 года компания активно расширяет линейку поставок компонентов по направлению коаксиальный кабель, кварцевые генераторы и конденсаторы (керамические, пленочные, электролитические), за счёт заключения дистрибьюторских договоров

Мы предлагаем:

- *Конкурентоспособные цены и скидки постоянным клиентам.*
- *Специальные условия для постоянных клиентов.*
- *Подбор аналогов.*
- *Поставку компонентов в любых объемах, удовлетворяющих вашим потребностям.*

- *Приемлемые сроки поставки, возможна ускоренная поставка.*
- *Доставку товара в любую точку России и стран СНГ.*
- *Комплексную поставку.*
- *Работу по проектам и поставку образцов.*
- *Формирование склада под заказчика.*

- *Сертификаты соответствия на поставляемую продукцию (по желанию клиента).*
- *Тестирование поставляемой продукции.*
- *Поставку компонентов, требующих военную и космическую приемку.*
- *Входной контроль качества.*
- *Наличие сертификата ISO.*

В составе нашей компании организован Конструкторский отдел, призванный помогать разработчикам, и инженерам.

Конструкторский отдел помогает осуществить:

- *Регистрацию проекта у производителя компонентов.*
- *Техническую поддержку проекта.*
- *Защиту от снятия компонента с производства.*
- *Оценку стоимости проекта по компонентам.*
- *Изготовление тестовой платы монтаж и пусконаладочные работы.*

Тел: +7 (812) 336 43 04 (многоканальный)
Email: org@lifeelectronics.ru

www.lifeelectronics.ru