OMRON
AUTOMATION & SAFETY

Accurax G5 Servo System

Extreme mechatronics meets X-Stream Automation

» Sub micron precision and ms settling time

» Motion network and safety built-in

» Double registration and full closed loop

Extreme mechatronics...

At the heart of every great machine

Great machines are born from a perfect match between control and mechanics. Accurax G5 gives you the extra edge to build more accurate, faster, smaller and safer machines. You will benefit from an almost 25% reduction in motor weight, and gain 50% cabinet space.

You will achieve sub micron precision and ms settling time. Some might call it perfection, we just call it tireless innovation to help you build great machines.

Rugged and smart design
- IP67 motor and connectors
- No flying leads
- 5G vibration resistance

EtherCAT connectivity
- Compliant with CoE –CiA402 Drive Profile–
- Cyclic synchronous Position, Velocity and Torque modes
- Embedded Gear Ratio, Homing and Profile Position mode
- Distributed clock to ensure high precision synchronization

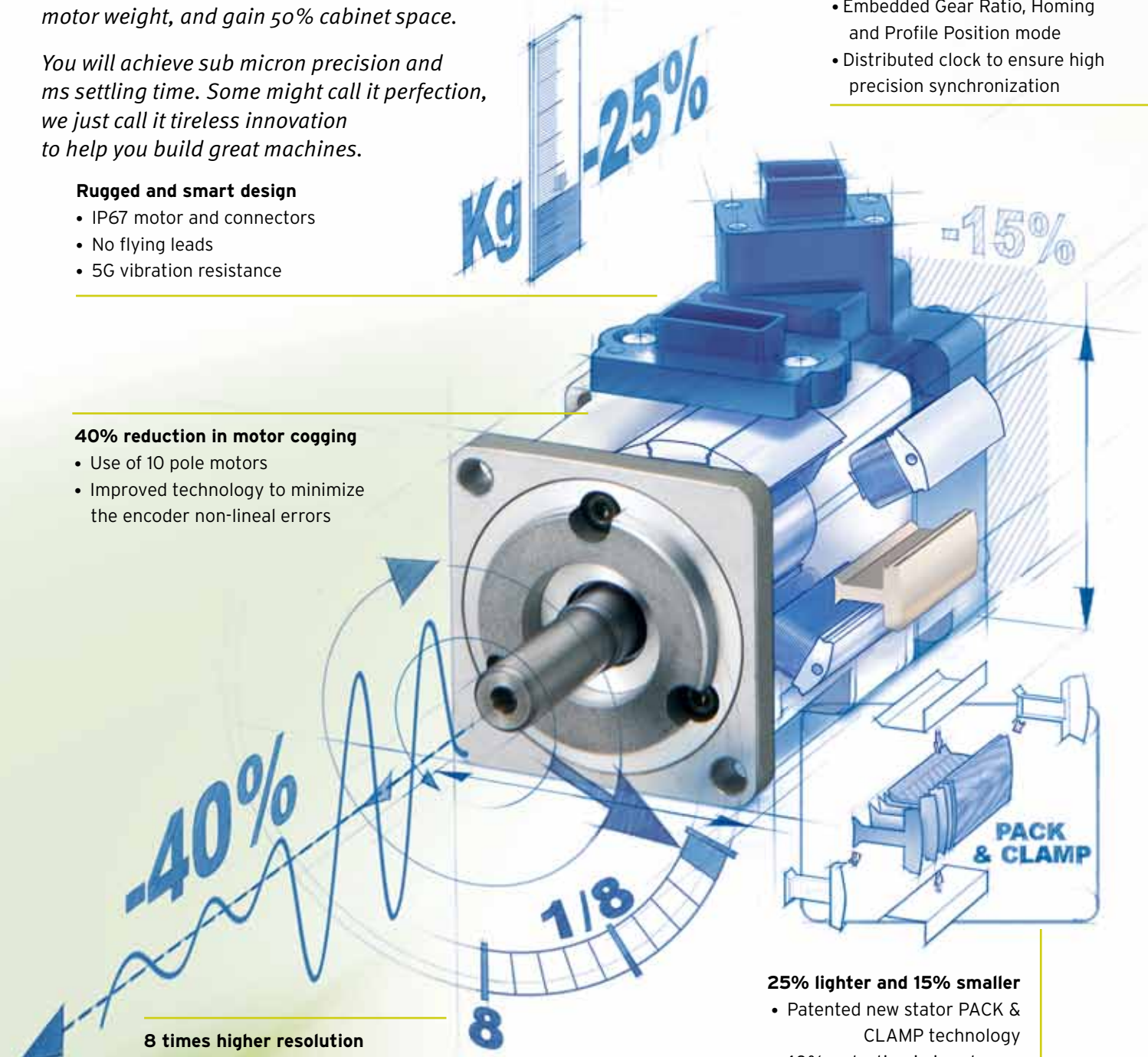

40% reduction in motor cogging
- Use of 10 pole motors
- Improved technology to minimize the encoder non-lineal errors

8 times higher resolution
- 20 bit encoder
- Faster processor

25% lighter and 15% smaller
- Patented new stator PACK & CLAMP technology
- 40% reduction in iron losses 45% smaller encoder

Up to 50% cabinet size reduction

- Up to 40% smaller drive
- Extra 10% saving thanks to side by side mounting

Safety conformance

- PL-d according ISO13849-1:2008
- STO: IEC61800-5-2:2007
- SIL2 according to EN61508:2001
- Cat.3: EN954-1:1996

Fast & accurate

- 5 times faster settling time -0~2 ms
- 2 kHz speed response
- Torque feed forward reduces following error

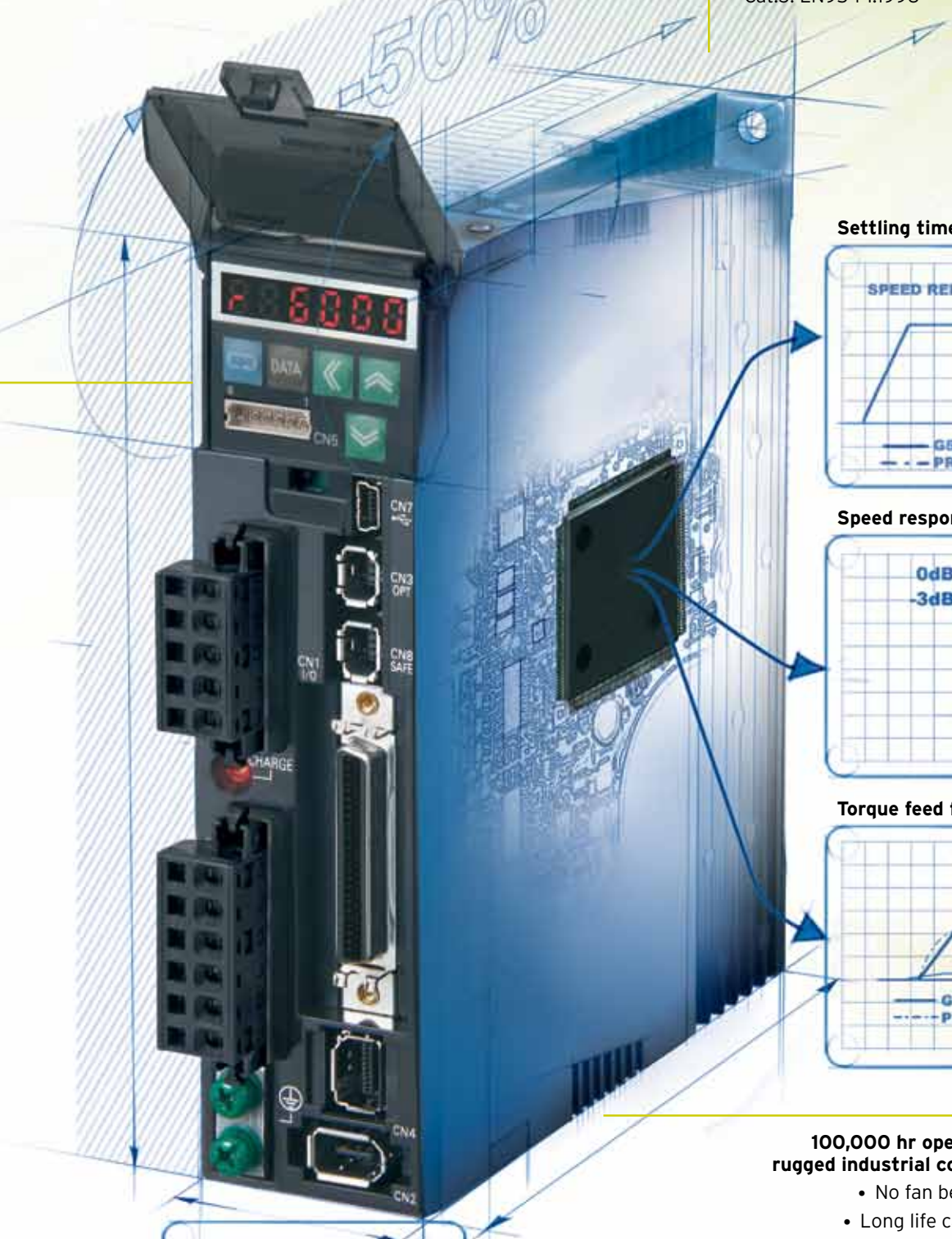

Settling time

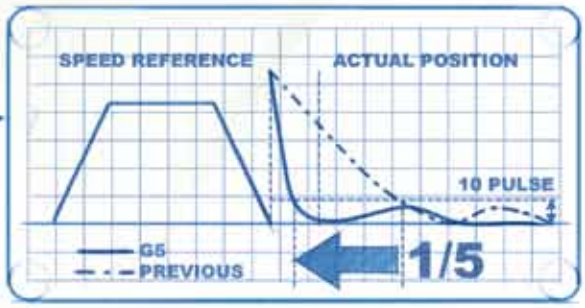

Speed response

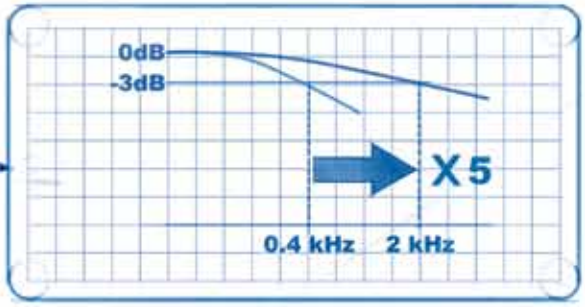

Torque feed forward

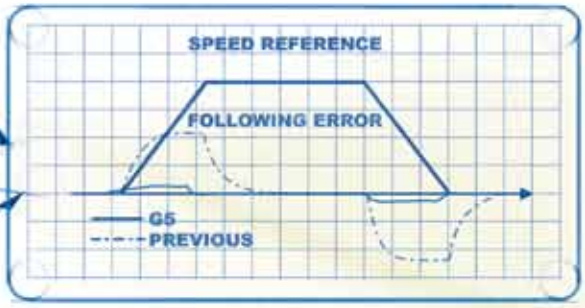

100,000 hr operation in rugged industrial conditions

- No fan below 1 kW
- Long life capacitors

Load vibration suppression

- Up to 4 preset frequencies
- Setting frequency from 1 to 200Hz

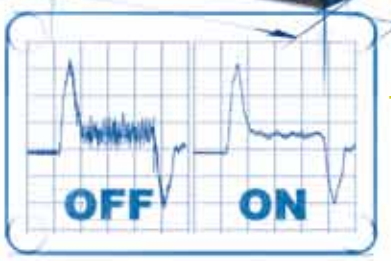

Vibration suppression

...meets X-Stream Automation

Accurax G5 is perfectly integrated into the new Sysmac automation platform. The servo is fully configured through the one software Sysmac Studio that includes configuration, programming, simulation and monitoring for the complete machine. The built-in EtherCAT connectivity with the distributed clock functionality allows accurate synchronization between all servos with less than 1µ jitter. Accurax G5 also simplifies your mechanical and electrical design by including double registration input, full closed loop and multi-drive safety functionality.

1 **Built-in safety: multi-drives in a single safety relay circuit**
The two safety inputs and the external device monitoring (EDM) output can be linked from one servo drive to another without using additional safety relays. Up to 8 servo drives can be connected to a single safety relay, saving hardware and wiring costs.

2 **Full closed loop**
Accurax G5 has a built-in external encoder input for full closed loop operation, for when additional accuracy is required. The external encoder input eliminates the errors caused by, for example, slip in the material.

3 **Double registration input**
Accurax G5 increases application versatility by providing 2 independent registration inputs per axis, especially relevant for applications such as flow wrappers. By registering the product input position and the mark position on the film, the system can make relative corrections ensuring high accuracy with a simple mechanical design.

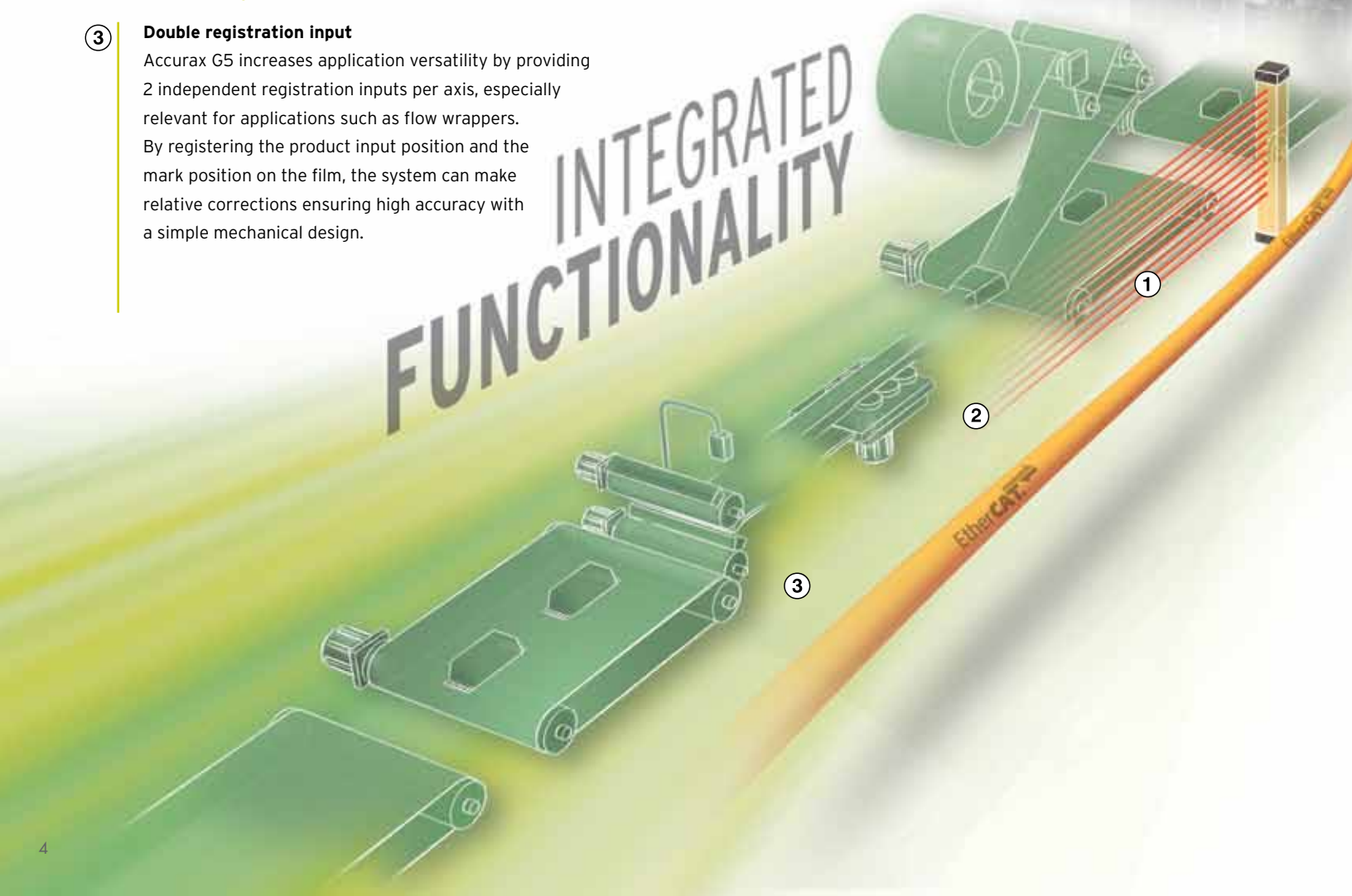

NJ Series Controller
NS HMI
Ethernet
EtherCAT
Open connectivity
• EtherCAT (built-in)
• DeviceNet
• EtherNet/IP (built-in)
• PROFIBUS
• PROFINET
ETHERNET CONNECTIVITY
INTUITIVE SOFTWARE
One software - One connection
• Full access to all devices from one connection
• One software for machine control programming and system setup
Ethernet
CONFIGURATION
Security
Field devices
Motion axis
Network
Controller
PROGRAMMING
Ladder
Structured text
Function Blocks
CAM editor
MONITORING
Trending, logging & tracing
3D Motion simulation
ESI files
Tag Data base
IEC progra-mming
PLCopen FB motion
Event log Database
PROJECT
Sysmac Studio

OMRON

R88D-KN□□□-ECT, R88D-KN□□□-ML2, R88D-KT□

Accurax G5 Servo System

Accurate motion control in a compact size servo drive family. EtherCAT and safety built-in.

- EtherCAT, ML-II and Analog/Pulse servo drive models
- Safety conforming ISO13849-1 Performance Level D
- High-response frequency of 2 kHz
- High accuracy provided by 20 bits encoder
- Full closed loop encoder built-in
- Real time auto-tuning
- Advanced tuning algorithms (Anti-vibration function, torque feedforward, disturbance observer)
- IP67 protection in all motor models
- Drive Programming: embedded indexer functionality in the Analog/Pulse models

Ratings

- 120 VAC Single-phase 50 W to 400 W
- 230 VAC Single-phase 50 W to 1.5 kW
- 230 VAC Three-phase 2 kW to 5 kW
- 460 VAC Three-phase 600 W to 15 kW

System Configuration

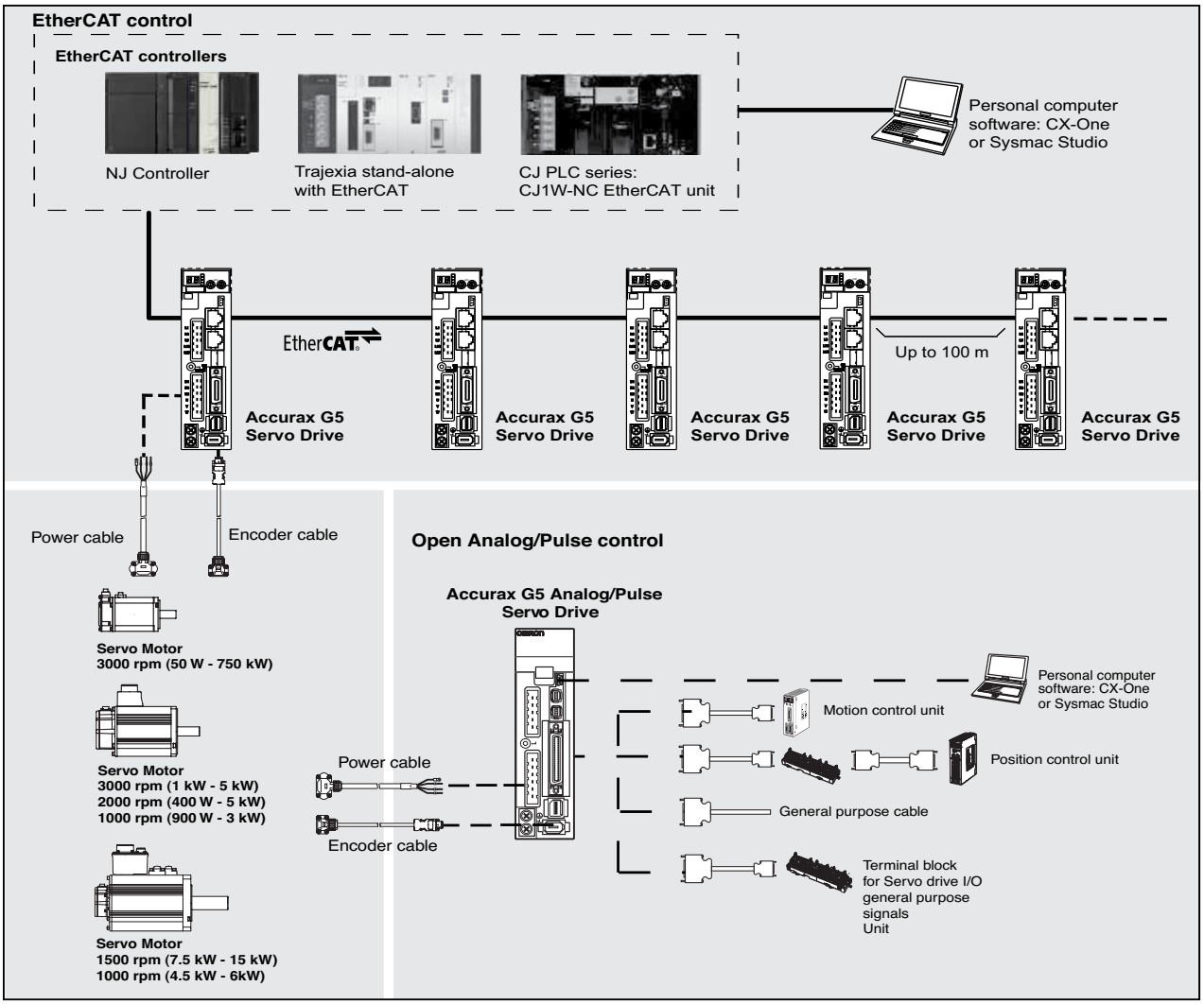

Servo Motor Type Designation

R88M-K05030H-BOS2

Accurax G5 Series servo motor

Capacity

050	50 W
100	100 W
200	200 W
400	400 W
600	600 W
750	750 W
900	900 W
1K0	1 kW
1K5	1.5 kW

2K0	2 kW
3K0	3 kW
4K0	4 kW
5K0	5 kW
6K0	6 kW
7K5	7.5 kW
11K0	11 kW
15K0	15 kW

Rated Speed (r/min)

10	1000
15	1500
20	2000
30	3000

Shaft end specifications

Blank	Straight shaft, no key
S2	Straight, key, tapped (standard)

Oil seal specifications

Blank	No oil seal
O	Oil seal

Brake specifications

Blank	No brake
B	Brake

Voltage and encoder specifications

L: 120 V and 20-bit incremental encoder

S: 120 V and 17-bit absolute encoder

H: 230 V and 20-bit incremental encoder

T: 230 V and 17-bit absolute encoder

F: 460 V and 20-bit incremental encoder

C: 460 V and 17-bit absolute encoder

Servo Drive Type Designation

R88D-KN01H-ECT

Accurax G5 Series servo drive

Drive Type

T: Analog/Pulse type

N: Network type

Model

Blank: Analog/Pulse type

ECT: EtherCAT comms

ML2: MECHATROLINK-II comms

Capacity and Voltage

Voltage	Code	Output
120 V	A5L	50 W
	01L	100 W
	02L	200 W
	04L	400 W
230 V	01H	100 W
	02H	200 W
	04H	400 W
	08H	750 W
	10H	1 kW
	15H	1.5 kW
	20H	2.0 kW
	30H	3.0 kW
	50H	5.0 kW
	75H	7.5 kW
460 V	06F	600 W
	10F	1.0 kW
	15F	1.5 kW
	20F	2.0 kW
	30F	3.0 kW
	50F	5.0 kW
	75F	7.5 kW
	150F	15.0 kW

Servo Motor/Servo Drive Combination

Servo System Compatibility

Accurax G5 rotary servo motor						Accurax G5 servo drive models		
Appearance	Voltage	Speed	Rated torque	Capacity	Model	EtherCAT	Analog/Pulse	MECHATROLINK-II
	120 V	3000 min^{-1}	0.16 N•m	50 W	R88M-K05030(H/T)-□	R88D-KNA5L-ECT	R88D-KTA5L	R88D-KNA5L-ML2
			0.32 N•m	100 W	R88M-K10030(L/S)-□	R88D-KN01L-ECT	R88D-KT01L	R88D-KN01L-ML2
			0.64 N•m	200 W	R88M-K20030(L/S)-□	R88D-KN02L-ECT	R88D-KT02L	R88D-KN02L-ML2
			1.3 N•m	400 W	R88M-K40030(L/S)-□	R88D-KN04L-ECT	R88D-KT04L	R88D-KN04L-ML2
	230 V	3000 min^{-1}	0.16 N•m	50 W	R88M-K05030(H/T)-□	R88D-KN01H-ECT	R88D-KT01H	R88D-KN01H-ML2
			0.32 N•m	100 W	R88M-K10030(H/T)-□	R88D-KN01H-ECT	R88D-KT01H	R88D-KN01H-ML2
			0.64 N•m	200 W	R88M-K20030(H/T)-□	R88D-KN02H-ECT	R88D-KT02H	R88D-KN02H-ML2
			1.3 N•m	400 W	R88M-K40030(H/T)-□	R88D-KN04H-ECT	R88D-KT04H	R88D-KN04H-ML2
			2.4 N•m	750 W	R88M-K75030(H/T)-□	R88D-KN08H-ECT	R88D-KT08H	R88D-KN08H-ML2
			3.18 N•m	1000 W	R88M-K1K030(H/T)-□	R88D-KN15H-ECT	R88D-KT15H	R88D-KN15H-ML2
			4.77 N•m	1500 W	R88M-K1K530(H/T)-□	R88D-KN15H-ECT	R88D-KT15H	R88D-KN15H-ML2
			6.37 N•m	2000 W	R88M-K2K030(H/T)-□	R88D-KN20H-ECT	R88D-KT20H	R88D-KN20H-ML2
			9.55 N•m	3000 W	R88M-K3K030(H/T)-□	R88D-KN30H-ECT	R88D-KT30H	R88D-KN30H-ML2
			12.7 N•m	4000 W	R88M-K4K030(H/T)-□	R88D-KN50H-ECT	R88D-KT50H	R88D-KN50H-ML2
			15.9 N•m	5000 W	R88M-K5K030(H/T)-□	R88D-KN50H-ECT	R88D-KT50H	R88D-KN50H-ML2
	460 V	3000 min^{-1}	2.39 N•m	750 W	R88M-K75030(F/C)-□	R88D-KN10F-ECT	R88D-KT10F	R88D-KN10F-ML2
			3.18 N•m	1000 W	R88M-K1K030(F/C)-□	R88D-KN15F-ECT	R88D-KT15F	R88D-KN15F-ML2
			4.77 N•m	1500 W	R88M-K1K530(F/C)-□	R88D-KN15F-ECT	R88D-KT15F	R88D-KN15F-ML2
			6.37 N•m	2000 W	R88M-K2K030(F/C)-□	R88D-KN20F-ECT	R88D-KT20F	R88D-KN20F-ML2
			9.55 N•m	3000 W	R88M-K3K030(F/C)-□	R88D-KN30F-ECT	R88D-KT30F	R88D-KN30F-ML2
			12.7 N•m	4000 W	R88M-K4K030(F/C)-□	R88D-KN50F-ECT	R88D-KT50F	R88D-KN50F-ML2
			15.9 N•m	5000 W	R88M-K5K030(F/C)-□	R88D-KN50F-ECT	R88D-KT50F	R88D-KN50F-ML2
	230 V	2000 min^{-1}	4.77 N•m	1000 W	R88M-K1K020(H/T)-□	R88D-KN10H-ECT	R88D-KT10H	R88D-KN10H-ML2
			7.16 N•m	1500 W	R88M-K1K520(H/T)-□	R88D-KN15H-ECT	R88D-KT15H	R88D-KN15H-ML2
			9.55 N•m	2000 W	R88M-K2K020(H/T)-□	R88D-KN20H-ECT	R88D-KT20H	R88D-KN20H-ML2
			14.3 N•m	3000 W	R88M-K3K020(H/T)-□	R88D-KN30H-ECT	R88D-KT30H	R88D-KN30H-ML2
			19.1 N•m	4000 W	R88M-K4K020(H/T)-□	R88D-KN50H-ECT	R88D-KT50H	R88D-KN50H-ML2
			23.9 N•m	5000 W	R88M-K5K020(H/T)-□	R88D-KN50H-ECT	R88D-KT50H	R88D-KN50H-ML2
	460 V	2000 min^{-1}	1.91 N•m	400 W	R88M-K40020(F/C)-□	R88D-KN06F-ECT	R88D-KT06F	R88D-KN06F-ML2
			2.86 N•m	600 W	R88M-K60020(F/C)-□	R88D-KN06F-ECT	R88D-KT06F	R88D-KN06F-ML2
			4.77 N•m	1000 W	R88M-K1K020(F/C)-□	R88D-KN10F-ECT	R88D-KT10F	R88D-KN10F-ML2
			7.16 N•m	1500 W	R88M-K1K520(F/C)-□	R88D-KN15F-ECT	R88D-KT15F	R88D-KN15F-ML2
			9.55 N•m	2000 W	R88M-K2K020(F/C)-□	R88D-KN20F-ECT	R88D-KT20F	R88D-KN20F-ML2
			14.3 N•m	3000 W	R88M-K3K020(F/C)-□	R88D-KN30F-ECT	R88D-KT30F	R88D-KN30F-ML2
			19.1 N•m	4000 W	R88M-K4K020(F/C)-□	R88D-KN50F-ECT	R88D-KT50F	R88D-KN50F-ML2
			23.9 N•m	5000 W	R88M-K5K020(F/C)-□	R88D-KN50F-ECT	R88D-KT50F	R88D-KN50F-ML2
		1500 min^{-1}	47.8 N•m	7500 W	R88M-K7K515C-□	R88D-KN75F-ECT	R88D-KT75F	–
			70.0 N•m	11000 W	R88M-K11K015C-□	R88D-KN150F-ECT	R88D-KT150F	–
			95.5 N•m	15000 W	R88M-K15K015C-□	R88D-KN150F-ECT	R88D-KT150F	–
	230 V	1000 min^{-1}	8.59 N•m	900 W	R88M-K90010(H/T)-□	R88D-KN15H-ECT	R88D-KT15H	R88D-KN15H-ML2
			19.1 N•m	2000 W	R88M-K2K010(H/T)-□	R88D-KN30H-ECT	R88D-KT30H	R88D-KN30H-ML2
			28.7 N•m	3000 W	R88M-K3K010(H/T)-□	R88D-KN50H-ECT	R88D-KT50H	R88D-KN50H-ML2
	460 V	1000 min^{-1}	8.59 N•m	900 W	R88M-K90010(F/C)-□	R88D-KN15F-ECT	R88D-KT15F	R88D-KN15F-ML2
			19.1 N•m	2000 W	R88M-K2K010(F/C)-□	R88D-KN30F-ECT	R88D-KT30F	R88D-KN30F-ML2
			28.7 N•m	3000 W	R88M-K3K010(F/C)-□	R88D-KN50F-ECT	R88D-KT50F	R88D-KN50F-ML2
			43.0 N•m	4500 W	R88M-K4K510C-□	R88D-KN50F-ECT	R88D-KT50F	R88D-KN50F-ML2
			57.3 N•m	6000 W	R88M-K6K010C-□	R88D-KN75F-ECT	R88D-KT75F	–

Servo Motor Specifications

Servo motors 3000 r/min rated speed driven with single-phase, 120 V servo drive

Servo drive input voltage			Single-phase, 120 V			
Applicable servo motor R88M-K□		20-bit incremental encoder	05030H-□	10030L-□	20030L-□	40030L-□
		17-bit absolute encoder	05030T-□	10030S-□	20030S-□	40030S-□
Rated output		W	50	100	200	400
Rated torque		N•m	0.16	0.32	0.64	1.3
Instantaneous peak torque		N•m	0.48	0.95	1.91	3.8
Rated current		A (rms)	1.1	1.6	2.5	4.6
Instantaneous max. current		A (rms)	4.7	6.9	10.6	19.5
Rated speed		r/min	3,000			
Max. speed		r/min	6,000			
Torque constant		N•m/ A (rms)	0.11±10%	0.14±10%	0.20±10%	0.21±10%
Rotor moment of inertia (JM)		kg•m^{2}x10^{-4} (without brake)	0.025	0.051	0.14	0.26
		kg•m^{2}x10^{-4} (with brake)	0.027	0.054	0.16	0.28
Allowable load moment of inertia (JL)		Multiple of (JM)	30 times the rotor inertia max.			
Rated power rate		kW/s (without brake)	10.1	19.8	28.9	62.3
		kW/s (with brake)	9.4	18.7	25.3	57.8
Allowable radial load		N	68	68	245	245
Allowable thrust load		N	58	58	98	98
Approx. weight		kg (without brake)	0.31	0.45	0.78	1.2
		kg (with brake)	0.51	0.65	1.2	1.6
Brake specifications	Rated voltage		24 VDC±10%			
	Holding brake moment of inertia (J)	kg•m^{2}x10^{-4}	0.0002	0.0002	0.0018	0.0018
	Power consumption (at 20°C)	W	7	7	9	9
	Current consumption (at 20°C)	A	0.3	0.3	0.36	0.36
	Static friction torque	N•m (minimum)	0.29	0.29	1.27	1.27
	Rise time for holding torque	ms (max.)	35	35	50	50
	Release time	ms (max.)	20	20	15	20
Basic specifications	Time rating		Continuous			
	Insulation class		Type B			
	Ambient operating/storage temperature		0 to +40°C/-20 to +65°C			
	Ambient operating/storage humidity (RH)		20% to 85% (non-condensing)			
	Vibration class		V-15			
	Insulation resistance		20 MΩ min. at 500 VDC between the power terminals and FG terminal			
	Enclosure		Totally-enclosed, self-cooling, IP67 (excluding shaft opening and motor and encoder pins)			
	Vibration resistance		Vibration acceleration 49 m/s^2			
	Mounting		Flange-mounted			

Torque-speed characteristics

R88M-K05030(H/T)-□ (50 W)

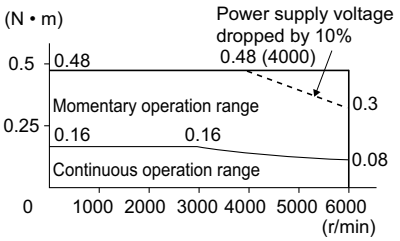

R88M-K10030(L/S)-□ (100 W)

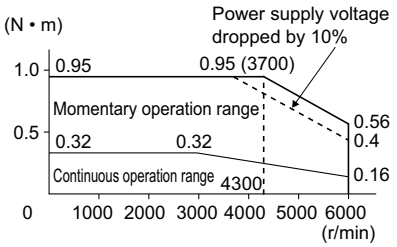

R88M-K20030(L/S)-□ (200 W)

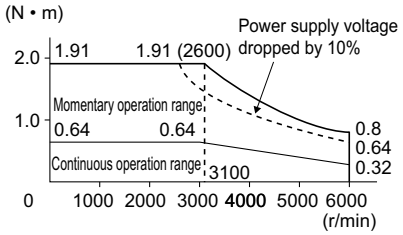

R88M-K40030(L/S)-□ (400 W)

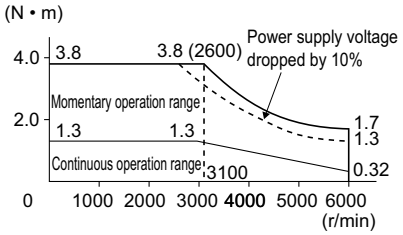

Servo Motor Specifications

Servo motors 3000 r/min rated speed driven with single-phase, 230 V servo drive

Servo drive input voltage			Single-phase, 230 V						
Servo motor model R88M-K□		20-bit incremental encoder	05030H-□	10030H-□	20030H-□	40030H-□	75030H-□	1K030H-□	1K530H-□
		17-bit absolute encoder	05030T-□	10030T-□	20030T-□	40030T-□	75030T-□	1K030T-□	1K530T-□
Rated output		W	50	100	200	400	750	1000	1500
Rated torque		N•m	0.16	0.32	0.64	1.3	2.4	3.18	4.77
Instantaneous peak torque		N•m	0.48	0.95	1.91	3.8	7.1	9.55	14.3
Rated current		A (rms)	1.2	1.1	1.5	2.4	4.1	6.6	8.2
Instantaneous max. current		A (rms)	5.1	4.7	6.5	10.2	17.4	28	35
Rated speed		r/min	3,000						
Max. speed		r/min	6,000					5,000	
Torque constant		N•m/ A (rms)	0.11±10%	0.21±10%	0.31±10%	0.39±10%	0.42±10%	0.37	0.45
Rotor moment of inertia (JM)		kg•m²x10⁻⁴ (without brake)	0.025	0.051	0.14	0.26	0.87	2.03	2.84
		kg•m²x10⁻⁴ (with brake)	0.027	0.054	0.16	0.28	0.97	2.35	3.17
Allowable load moment of inertia (JL)		Multiple of (JM)	30				20	15	
Rated power rate		kW/s (without brake)	10.1	19.9	29.0	62.4	65.6	49.8	80.1
		kW/s (with brake)	9.4	18.8	25.4	58	58.8	43	71.8
Allowable radial load		N	68		245		490		
Allowable thrust load		N	58		98		196		
Approx. mass		kg (without brake)	0.32	0.47	0.82	1.2	2.3	3.5	4.4
		kg (with brake)	0.53	0.68	1.3	1.7	3.1	4.5	5.4
Brake specifications	Rated voltage		24 VDC±10%						
	Holding brake moment of inertia (J)	kg•m²x10⁻⁴	0.002		0.0018		0.33		
	Power consumption (at 20°C)	W	7		9		17	19	
	Current consumption (at 20°C)	A	0.3		0.36		0.70±10%	0.81±10%	
	Static friction torque	N•m (minimum)	0.29		1.27		2.5	7.8	
	Rise time for holding torque	ms (max.)	35		50				
	Release time	ms (max.)	20		15				
Basic specifications	Time rating		Continuous						
	Insulation class		Type B					Type F	
	Ambient operating/storage temperature		0 to +40°C/-20 to +65°C						
	Ambient operating/storage humidity (RH)		20% to 80% (non-condensing)					20% to 85% (non-condensing)	
	Vibration class		V-15						
	Insulation resistance		20 MΩ min. at 500 VDC between the power terminals and FG terminal						
	Enclosure		Totally-enclosed, self-cooling, IP67 (excluding shaft opening)						
	Vibration resistance		Vibration acceleration 49 m/s²						
	Mounting		Flange-mounted						

Torque-speed characteristics

R88M-K05030H/T (50 W)

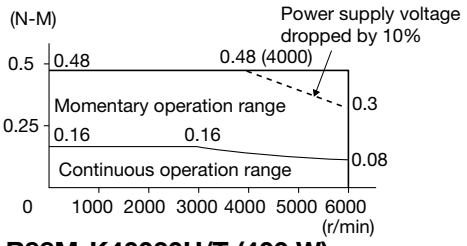

R88M-K10030H/T (100 W)

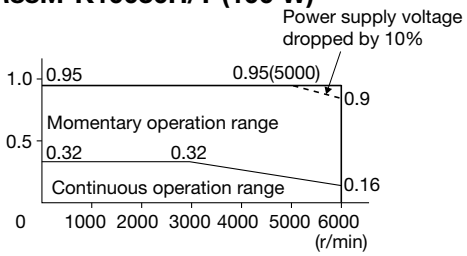

R88M-K20030H/T (200 W)

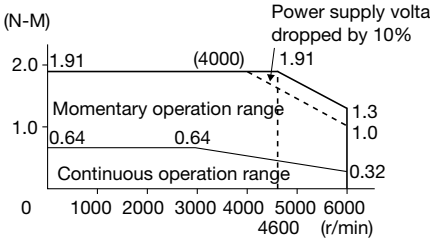

R88M-K40030H/T (400 W)

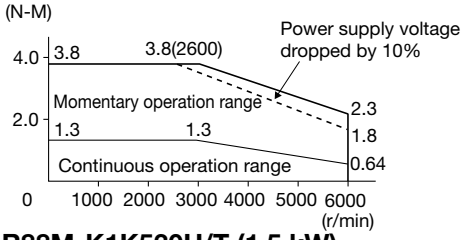

R88M-K75030H/T (750 W)

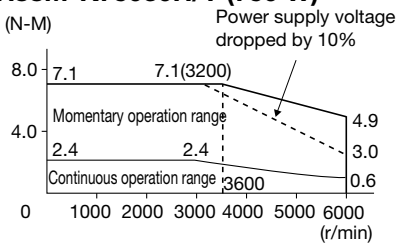

R88M-K1K030H/T (1 kW)

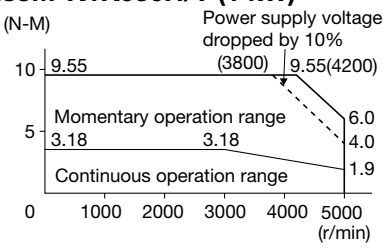

R88M-K1K530H/T (1.5 kW)

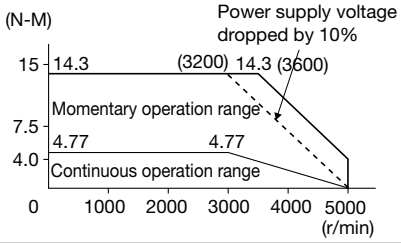

Servo Motor Specifications

Servo motors 3000 r/min rated speed driven with three-phase, 230 V servo drive

Servo drive input voltage			Three-phase, 230 V			
Applicable servo motor R88M-□		20-bit incremental encoder	K2K030H-□	K3K030H-□	K4K030H-□	K5K030H-□
		17-bit absolute encoder	K2K030T-□	K3K030T-□	K4K030T-□	K5K030T-□
Rated output		kW	2	3	4	5
Rated torque		N•m	6.37	9.55	12.7	15.9
Instantaneous peak torque		N•m	19.1	28.6	38.2	47.7
Rated current		A (rms)	11.3	18.1	19.6	24
Instantaneous max. current		A (rms)	48	77	83	102
Rated speed		r/min	3,000			
Max. speed		r/min	5,000			
Torque constant		N•m/ A (rms)	0.44	0.41	0.49	0.49
Rotor moment of inertia (JM)		$kg•m^2x10^{-4}$ (without brake)	3.68	6.5	12.9	17.4
		$kg•m^2x10^{-4}$ (with brake)	4.01	7.85	14.2	18.6
Allowable load moment of inertia (JL)		Multiple of (JM)	15 times the rotor inertia max.			
Rated power rate		kW/s (without brake)	110	140	126	146
		kW/s (with brake)	101	116	114	136
Allowable radial load		N	490	490	784	784
Allowable thrust load		N	196	196	343	343
Approx. weight		kg (without brake)	5.3	8.3	11	14
		kg (with brake)	6.3	9.4	12.6	16
Brake specifications	Rated voltage		24 VDC±10%			
	Holding brake moment of inertia (J)	$kg•m^2x10^{-4}$	0.33	0.33	1.35	1.35
	Power consumption (at 20°C)	W	19	19	22	22
	Current consumption (at 20°C)	A	0.81±10%	0.81±10%	0.90±10%	0.90±10%
	Static friction torque	N•m (minimum)	7.8	11.8	16.1	16.1
	Rise time for holding torque	ms (max.)	50	80	110	110
	Release time	ms (max.)	15	15	50	50
Basic specifications	Time rating		Continuous			
	Insulation class		Type F			
	Ambient operating/storage temperature		0 to +40°C/-20 to +65°C			
	Ambient operating/storage humidity (RH)		20% to 85% (non-condensing)			
	Vibration class		V-15			
	Insulation resistance		20 MΩ min. at 500 VDC between the power terminals and FG terminal			
	Enclosure		Totally-enclosed, self-cooling, IP67 (excluding shaft opening and motor and encoder pins)			
	Vibration resistance		Vibration acceleration 49 m/s^2			
	Mounting		Flange-mounted			

Torque-speed characteristics

R88M-K2K030(H/T)-□ (2 kW)

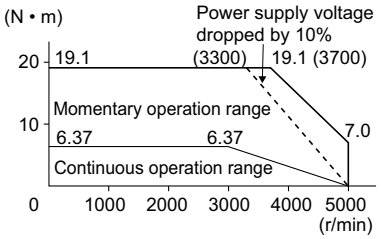

R88M-K3K030(H/T)-□ (3 kW)

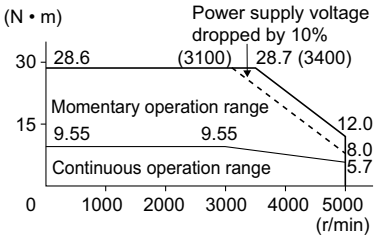

R88M-K4K030(H/T)-□ (4 kW)

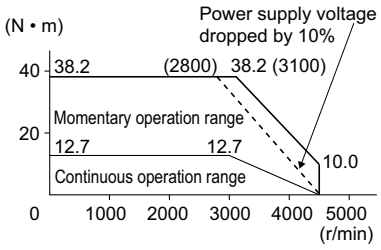

R88M-K5K030(H/T)-□ (5 kW)

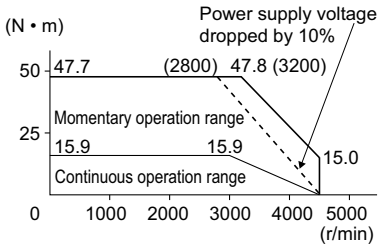

Servo Motor Specifications

Servo motors 3000 r/min rated speed driven with three-phase, 460 V servo drive

Servo drive input voltage			Three-phase, 460 V						
Servo motor model R88M-K□		20-bit incremental encoder	75030F-□	1K030F-□	1K530F-□	2K030F-□	3K030F-□	4K030F-□	5K030F-□
		17-bit absolute encoder	75030C-□	1K030C-□	1K530C-□	2K030C-□	3K030C-□	4K030C-□	5K030C-□
Rated output		W	750	1000	1500	2000	3000	4000	5000
Rated torque		N•m	2.39	3.18	4.77	6.37	9.55	12.7	15.9
Instantaneous peak torque		N•m	7.16	9.55	14.3	19.1	28.6	38.2	47.7
Rated current		A (rms)	2.4	3.3	4.2	5.7	9.2	9.9	12
Instantaneous max. current		A (rms)	10	14	18	24	39	42	51
Rated speed		r/min	3,000						
Max. speed		r/min	5,000					4,500	
Torque constant		N•m/ A (rms)	0.78	0.75	0.89	0.87	0.81	0.98	
Rotor moment of inertia (JM)		$kg•m^2x10^{-4}$ (without brake)	1.61	2.03	2.84	3.68	6.5	12.9	17.4
		$kg•m^2x10^{-4}$ (with brake)	1.93	2.35	3.17	4.01	7.85	14.2	18.6
Allowable load moment of inertia (JL)		Multiple of (JM)	30						
Rated power rate		kW/s (without brake)	35.5	49.8	80.1	110	140	126	146
		kW/s (with brake)	29.6	43	71.8	101	116	114	136
Allowable radial load		N	490					784	
Allowable thrust load		N	196					343	
Approx. mass		kg (without brake)	3.1	3.5	4.4	5.3	8.3	11	14
		kg (with brake)	4.1	4.5	5.4	6.3	9.4	12.6	16
Brake specifications	Rated voltage		24 VDC±10%						
	Holding brake moment of inertia (J)	$kg•m^2x10^{-4}$	0.33						1.35
	Power consumption (at 20°C)	W	17	19				22	
	Current consumption (at 20°C)	A	0.70±10%	0.81±10%				0.90±10%	
	Static friction torque	N•m (minimum)	2.5	7.8			11.8	16.1	
	Rise time for holding torque	ms (max.)	50					110	
	Release time	ms (max.)	15					50	
Basic specifications	Time rating		Continuous						
	Insulation class		Type F						
	Ambient operating/storage temperature		0 to +40°C/-20 to +65°C						
	Ambient operating/storage humidity (RH)		20% to 85% (non-condensing)						
	Vibration class		V-15						
	Insulation resistance		20 MΩ min. at 500 VDC between the power terminals and FG terminal						
	Enclosure		Totally-enclosed, self-cooling, IP67 (excluding shaft opening)						
	Vibration resistance		Vibration acceleration 49 m/s^2						
	Mounting		Flange-mounted						

Torque-speed characteristics

R88M-K75030F/C (750 W)

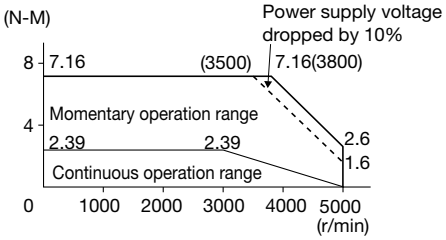

R88M-K1K030F/C (1 kW)

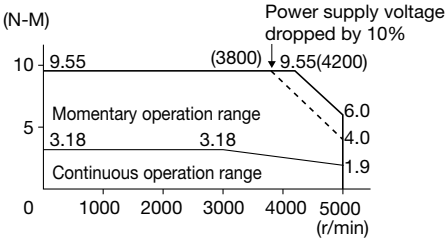

R88M-K1K530F/C (1.5 kW)

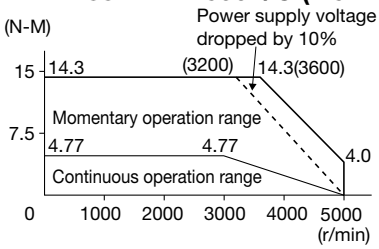

R88M-K2K030F/C (2 kW)

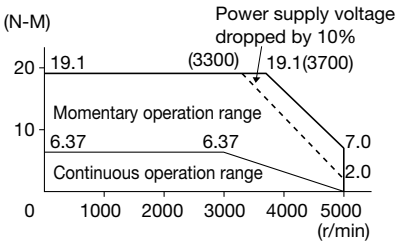

R88M-K3K030F/C (3 kW)

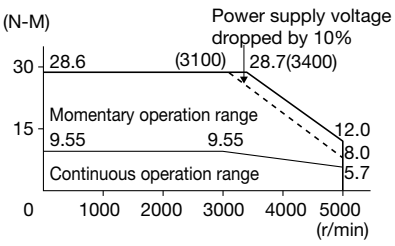

R88M-K4K030F/C (4 kW)

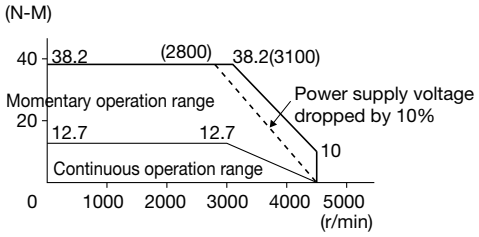

R88M-K5K030F/C (5 kW)

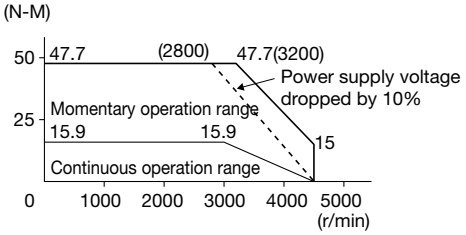

Servo Motor Specifications

Servo motors 2000 r/min rated speed driven with three-phase, 230 V servo drive

Servo drive input voltage			Three-phase, 230 V					
Applicable servo motor R88M-□		20-bit incremental encoder	K1K020H-□	K1K520H-□	K2K020H-□	K3K020H-□	K4K020H-□	K5K020H-□
		17-bit absolute encoder	K1K020T-□	K1K520T-□	K2K020T-□	K3K020T-□	K4K020T-□	K5K020T-□
Rated output		kW	1	1.5	2	3	4	5
Rated torque		N•m	4.77	7.16	9.55	14.3	19.1	23.9
Instantaneous peak torque		N•m	14.3	21.5	28.6	43	57.3	71.6
Rated current		A (rms)	5.7	9.4	11.5	17.4	21	25.9
Instantaneous max. current		A (rms)	24	40	49	74	89	110
Rated speed		r/min	2000					
Max. speed		r/min	3000					
Torque constant		N•m/ A (rms)	0.63	0.58	0.64	0.59	0.7	0.7
Rotor moment of inertia (JM)		$kg•m^2x10^{-4}$ (without brake)	4.6	6.7	8.72	12.9	37.6	48
		$kg•m^2x10^{-4}$ (with brake)	5.9	7.99	10	14.2	38.6	48.8
Allowable load moment of inertia (JL)		Multiple of (JM)	10 times the rotor inertia max.					
Rated power rate		kW/s (without brake)	49.5	76.5	105	159	97.1	119
		kW/s (with brake)	38.6	64.2	91.2	144	94.5	117
Allowable radial load		N	490	490	490	784	784	784
Allowable thrust load		N	196	196	196	343	343	343
Approx. weight		kg (without brake)	5.2	6.7	8	11	15.5	18.6
		kg (with brake)	6.7	8.2	9.5	12.6	18.7	21.8
Brake specifications	Rated voltage		24 VDC±10%					
	Holding brake moment of inertia (J)	$kg•m^2x10^{-4}$	1.35	1.35	1.35	1.35	4.7	4.7
	Power consumption (at 20°C)	W	14	19	19	22	31	31
	Current consumption (at 20°C)	A	0.59±10%	0.79±10%	0.79±10%	0.90±10%	1.3±10%	1.3±10%
	Static friction torque	N•m (minimum)	4.9	13.7	13.7	16.2	24.5	24.5
	Rise time for holding torque	ms (max.)	80	100	100	110	80	80
	Release time	ms (max.)	70	50	50	50	25	25
Basic specifications	Time rating		Continuous					
	Insulation class		Type F					
	Ambient operating/storage temperature		0 to +40 °C/ -20 to 85°C					
	Ambient operating/storage humidity (RH)		20% to 85% (non-condensing)					
	Vibration class		V-15					
	Insulation resistance		20 MΩ min. at 500 VDC between the power terminals and FG terminal					
	Enclosure		Totally-enclosed, self-cooling, IP67 (excluding shaft opening and motor and encoder pins)					
	Vibration resistance		Vibration acceleration 49 m/s^2					
	Mounting		Flange-mounted					

Torque-speed characteristics

R88M-K1K020(H/T)-□ (1 kW)

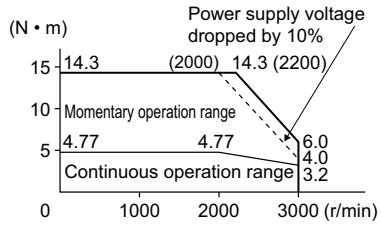

R88M-K1K520(H/T)-□ (1.5 kW)

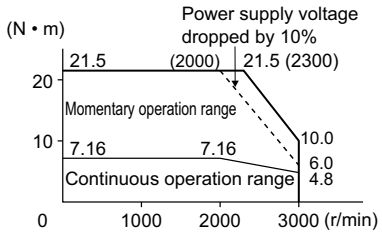

R88M-K2K020(H/T)-□ (2 kW)

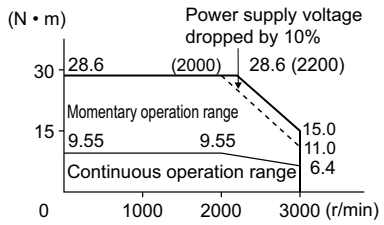

R88M-K3K020(H/T)-□ (3 kW)

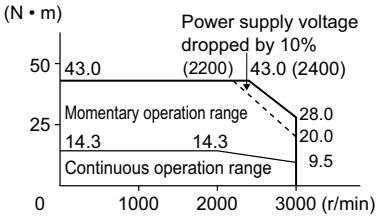

R88M-K4K020(H/T)-□ (4 kW)

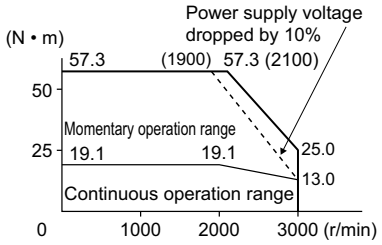

R88M-K5K020(H/T)-□ (5 kW)

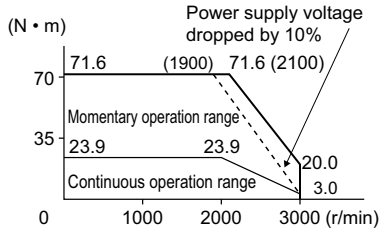

Servo Motor Specifications

Servo motors 2000 r/min rated speed driven with three-phase, 460 V servo drive

Servo drive input voltage			Three-phase, 460 V							
Applicable servo motor R88M-□		20-bit incremental encoder	40020F-□	60020F-□	K1K020F-□	K1K520F-□	K2K020F-□	K3K020F-□	K4K020F-□	K5K020F-□
		17-bit absolute encoder	40020C-□	60020C-□	K1K020C-□	K1K520C-□	K2K020C-□	K3K020C-□	K4K020C-□	K5K020C-□
Rated output		kW	0.4	0.6	1	1.5	2	3	4	5
Rated torque		N•m	1.91	2.86	4.77	7.16	9.55	14.3	19.1	23.9
Instantaneous peak torque		N•m	5.73	8.59	14.3	21.5	28.7	43	57.3	71.6
Rated current		A (rms)	1.2	1.5	2.8	4.7	5.9	8.7	10.6	13
Instantaneous max. current		A (rms)	4.9	6.5	12	20	25	37	45	55
Rated speed		r/min	2000							
Max. speed		r/min	3000							
Torque constant		N•m/ A (rms)	1.27	1.38	1.27	1.16	1.27	1.18	1.4	1.46
Rotor moment of inertia (JM)		$kg•m^2x10^{-4}$ (without brake)	1.61	2.03	4.6	6.7	8.72	12.9	37.6	48
		$kg•m^2x10^{-4}$ (with brake)	1.9	2.35	5.9	7.99	10	14.2	38.6	48.8
Allowable load moment of inertia (JL)		Multiple of (JM)	10 times the rotor inertia max.							
Rated power rate		kW/s (without brake)	22.7	40.3	49.5	76.5	105	159	97.1	119
		kW/s (with brake)	19.2	34.8	38.6	64.2	91.2	144	94.5	117
Allowable radial load		N	490	490	490	490	490	784	784	784
Allowable thrust load		N	196	196	196	196	196	343	343	343
Approx. weight		kg (without brake)	3.1	3.5	5.2	6.7	8	11	15.5	18.6
		kg (with brake)	4.1	4.5	6.7	8.2	9.5	12.6	18.7	21.8
Brake specifications	Rated voltage		24 VDC±10%							
	Holding brake moment of inertia (J)	$kg•m^2x10^{-4}$	1.35	1.35	1.35	1.35	1.35	1.35	4.7	4.7
	Power consumption (at 20°C)	W	17	17	14	19	19	22	31	31
	Current consumption (at 20°C)	A	0.70 ±10%	0.70 ±10%	0.59±10%	0.79±10%	0.79±10%	0.90±10%	1.3±10%	1.3±10%
	Static friction torque	N•m (minimum)	2.5	2.5	4.9	13.7	13.7	16.2	24.5	24.5
	Rise time for holding torque	ms (max.)	50	50	80	100	100	110	80	80
	Release time	ms (max.)	15	15	70	50	50	50	25	25
Basic specifications	Time rating		Continuous							
	Insulation class		Type F							
	Ambient operating/storage temperature		0 to +40 °C/ -20 to 85°C							
	Ambient operating/storage humidity (RH)		20% to 85% (non-condensing)							
	Vibration class		V-15							
	Insulation resistance		20 MΩ min. at 500 VDC between the power terminals and FG terminal							
	Enclosure		Totally-enclosed, self-cooling, IP67 (excluding shaft opening and motor and encoder pins)							
	Vibration resistance		Vibration acceleration 49 m/s^2							
	Mounting		Flange-mounted							

Torque-speed characteristics

R88M-K40020F/C (400 W)

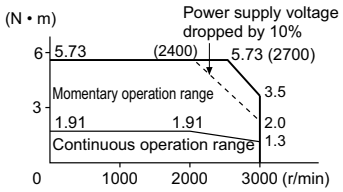

R88M-K60020F/C (600 W)

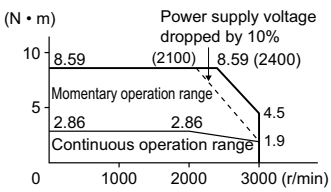

R88M-K1K020F/C (1 kW)

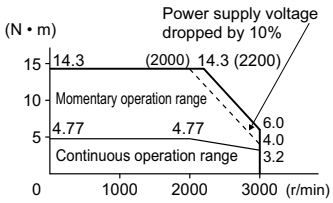

R88M-K1K520F/C (1.5 kW)

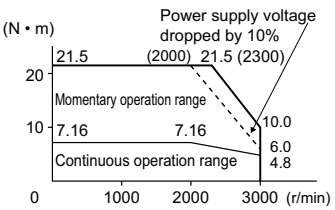

R88M-K2K020F/C (2 kW)

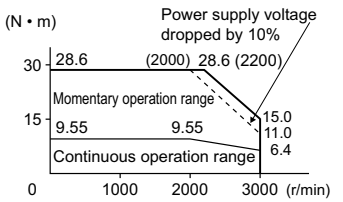

R88M-K3K0F/C (3 kW)

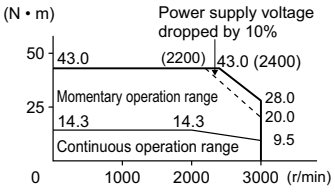

R88M-K4K020F/C (4 kW)

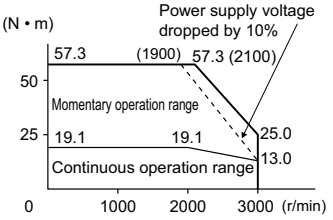

R88M-K5K020F/C (5 kW)

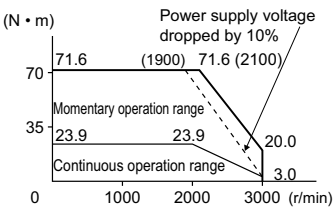

Servo Motor Specifications

Servo motors 1500 r/min rated speed driven with three-phase, 460 V servo drive

Servo drive input voltage			Three-phase, 230 V	Three-phase, 460 V		
Applicable servo motor R88M-K□		17-bit absolute encoder	K7K5015T-□	7K515C-□	11K015C-□	15K015C-□
Rated output		kW	7500	7500	11000	15000
Rated torque		N•m	47.8	47.8	70.0	95.5
Instantaneous peak torque		N•m	119.0	119.0	175.0	224.0
Rated current		A (rms)	44	22.0	27.1	33.1
Instantaneous max. current		A (rms)	165	83	101	118
Rated speed		r/min	1500			
Max. speed		r/min	3000	3000	2000	
Torque constant		N•m/ A (rms)	0.77	1.54	1.84	2.10
Rotor moment of inertia (JM)		kg•m^{2}x10^{-4} (without brake)	101	101	212	302
		kg•m^{2}x10^{-4} (with brake)	107	107	220	311
Allowable load moment of inertia (JL)		Multiple of (JM)	10 times the rotor inertia max.			
Rated power rate		kW/s (without brake)	226	226	231	302
		kW/s (with brake)	213	213	223	293
Allowable radial load		N	1176	1176	2254	2254
Allowable thrust load		N	490	490	686	686
Approx. weight		kg (without brake)	36.4	36.4	52.7	70.2
		kg (with brake)	40.4	40.4	58.9	76.3
Brake specifications	Rated voltage		24 VDC±10%			
	Holding brake moment of inertia (J)	kg•m^{2}x10^{-4}	4.7		7.1	7.1
	Power consumption (at 20°C)	W	34		26	26
	Current consumption (at 20°C)	A	1.4±10%		1.08±10%	1.08±10%
	Static friction torque	N•m (minimum)	58.8		100	100
	Rise time for holding torque	ms (max.)	150		300	300
	Release time	ms (max.)	50		140	140
Basic specifications	Time rating		Continuous			
	Insulation class		Type F			
	Ambient operating/storage temperature		0 to +40 °C/ -20 to 65°C			
	Ambient operating/storage humidity (RH)		20% to 85% (non-condensing)			
	Vibration class		V-15			
	Insulation resistance		20 MΩ min. at 500 VDC between the power terminals and FG terminal			
	Enclosure		Totally-enclosed, self-cooling, IP67 (excluding shaft opening)			
	Vibration resistance		Vibration acceleration 49 m/s^2			
	Mounting		Flange-mounted			

Torque-speed characteristics

R88M-K7K515(T/C) (7.5 kW)

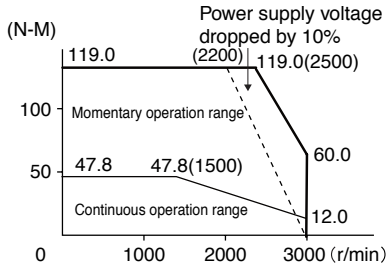

R88M-K11K015C (11 kW)

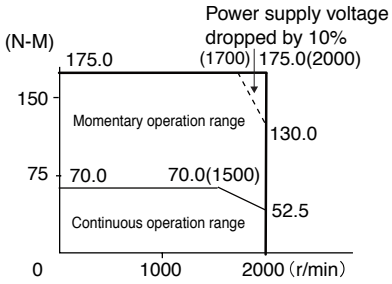

R88M-K15K015C (15 kW)

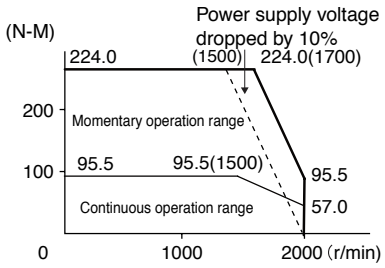

Servo Motor Specifications

Servo motors 1000 r/min rated speed driven with three-phase, 230 V or 460 V servo drive

Servo drive input voltage			Three-phase, 230 V			Three-phase, 460 V			
Applicable servo motor R88M-□		20-bit incremental encoder	K90010H-□	K2K010H-□	K3K010H-□	K90010F-□	K2K010F-□	K3K010F-□	
		17-bit absolute encoder	K90010T-□	K2K010T-□	K3K010T-□	K90010C-□	K2K010C-□	K3K010C-□	K6K010C-□
Rated output		kW	0.9	2	3	0.9	2	3	6
Rated torque		N•m	8.59	19.1	28.7	8.59	19.1	28.7	57.3
Instantaneous peak torque		N•m	19.3	47.7	71.7	19.3	47.7	71.7	143.0
Rated current		A (rms)	7.6	17	22.6	3.8	8.5	11.3	19.4
Instantaneous max. current		A (rms)	24	60	80	12	30	40	74
Rated speed		r/min	1000						
Max. speed		r/min	2000						
Torque constant		N•m/ A (rms)	0.86	0.88	0.96	1.72	1.76	1.92	2.08
Rotor moment of inertia (JM)		kg•m²x10⁻⁴ (without brake)	6.7	30.3	48.4	6.7	30.3	48.4	101
		kg•m²x10⁻⁴ (with brake)	7.99	31.4	49.2	7.99	31.4	49.2	107
Allowable load moment of inertia (JL)		Multiple of (JM)	10 times the rotor inertia max.						
Rated power rate		kW/s (without brake)	110	120	170	110	120	170	325
		kW/s (with brake)	92.4	116	167	92.4	116	167	307
Allowable radial load		N	686	1176	1470	686	1176	1470	1764
Allowable thrust load		N	196	490	490	196	490	490	588
Approx. weight		kg (without brake)	6.7	14	20	6.7	14	20	36.4
		kg (with brake)	8.2	17.5	23.5	8.2	17.5	23.5	40.4
Brake specifications	Rated voltage		24 VDC±10%						
	Holding brake moment of inertia (J)	kg•m²x10⁻⁴	1.35	4.7	4.7	1.35	4.7	4.7	4.7
	Power consumption (at 20°C)	W	19	31	34	19	31	34	34
	Current consumption (at 20°C)	A	0.79±10%	1.3±10%	1.4±10%	0.79±10%	1.3±10%	1.4±10%	1.4±10%
	Static friction torque	N•m (minimum)	13.7	24.5	58.8	13.7	24.5	58.8	58.8
	Rise time for holding torque	ms (max.)	100	80	150	100	80	150	150
	Release time	ms (max.)	50	25	50	50	25	50	50
Basic specifications	Time rating		Continuous						
	Insulation class		Type F						
	Ambient operating/storage temperature		0 to +40 °C/ -20 to 85°C						
	Ambient operating/storage humidity (RH)		20% to 85% (non-condensing)						
	Vibration class		V-15						
	Insulation resistance		20 MΩ min. at 500 VDC between the power terminals and FG terminal						
	Enclosure		Totally-enclosed, self-cooling, IP67 (excluding shaft opening and motor and encoder pins)						
	Vibration resistance		Vibration acceleration 49 m/s²						
	Mounting		Flange-mounted						

Torque-speed characteristics

R88M-K90010(H/T/F/C)-□ (900 W)

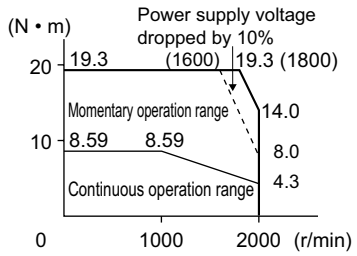

R88M-K2K010(H/T/F/C)-□ (2 kW)

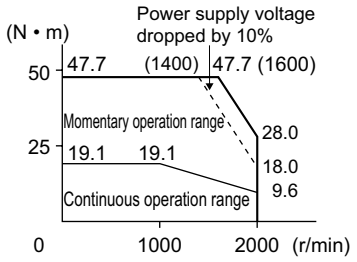

R88M-K3K010(H/T/F/C)-□ (3 kW)

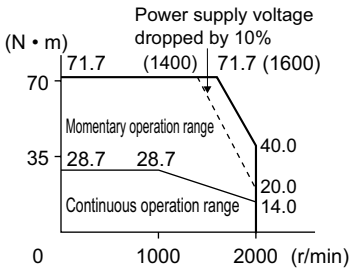

R88M-K6K010(C)-□ (6 kW)

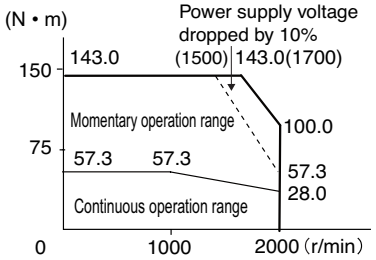

Servo Motor Specifications

Single-phase, 120 V

Servo drive type	R88D-K□		A5L □	01L□	02L□	04L□
Applicable servo motor	R88M-K□		05030H□	10030L□	20030L□	40030L□
			05030T□	10030S□	20030S□	40030S□
Basic specifications	Max. Applicable motor capacity	W	50	100	200	400
	Continuous output current	A (rms)	1.2	1.7	2.5	4.6
	Input power	Main circuit	Single-phase 100 to 120 VAC + 10 to -15% (50/60 Hz)			
	Supply	Control circuit	Single-phase 100 to 120 VAC + 10 to -15% (50/60 Hz)			
	Control method		IGBT-driven PWM method, sinusoidal drive			
	Feedback		Serial encoder (incremental/absolute value)			
	Conditions	Usage/storage temperature	0 to +55 °C / -20 to 65 °C			
		Usage/storage humidity	90% RH or less (non-condensing)			
		Altitude	1000 m or less above sea level			
		Vibration/shock resistance (max.)	5.88 m/s² 10-60 Hz (Continuous operation at resonance point is not allowed) / 19.6 m/s²			
	Configuration		Base mounted			
	Approx. weight	Kg	0.8	0.8	1.0	1.6

Single-phase, 230 V

Servo drive type	R88D-K□		01H□	02H□	04H□	08H□	10H□	15H□
Applicable servo motor	R88M-K□		05030(H/T)□	20030(H/T)□	40030(H/T)□	75030(H/T)□	1K020(H/T)□	1K030(H/T)□
			10030(H/T)□	–	–	–	–	1K530(H/T)□
			–	–	–	–	–	1K520(H/T)□
			–	–	–	–	–	90010(H/T)□
Basic specifications	Max. Applicable motor capacity	W	100	200	400	750	1000	1500
	Continuous output current	A (rms)	1.2	1.6	2.6	4.1	5.9	9.4
	Input power	Main circuit	Single-phase/3-phase, 200 to 240 VAC + 10 to -15% (50/60 Hz)					
	Supply	Control circuit	Single-phase, 200 to 240 VAC + 10 to -15% (50/60 Hz)					
	Control method		IGBT-driven PWM method, sinusoidal drive					
	Feedback		Serial encoder (incremental/absolute value)					
	Conditions	Usage/storage temperature	0 to +55 °C / -20 to 65 °C					
		Usage/storage humidity	90% RH or less (non-condensing)					
		Altitude	1000 m or less above sea level					
		Vibration/shock resistance (max.)	5.88 m/s² 10-60 Hz (Continuous operation at resonance point is not allowed) / 19.6 m/s²					
	Configuration		Base mounted					
	Approx. weight	Kg	0.8	0.8	1.1	1.6	1.8	1.8

Three-phase, 230 V

Servo drive type	R88D-K□		20H□	30H□	50H□	75H□
Applicable servo motor	R88M-K□		2K030(H/T)□	3K030(H/T)□	3K010(H/T)□	7K5015T□
			2K020(H/T)□	3K020(H/T)□	4K030(H/T)□	–
			–	2K010(H/T)□	4K020(H/T)□	–
			–	–	5K030(H/T)□	–
			–	–	5K020(H/T)□	–
Basic specifications	Max. Applicable motor capacity	W	2000	3000	5000	7500
	Continuous output current	A (rms)	13.4	18.7	33.0	44.0
	Input power	Main circuit	3-phase, 200 to 240 VAC + 10 to -15% (50/60 Hz)			
	Supply	Control circuit	Single-phase, 200 to 240 VAC + 10 to -15% (50/60 Hz)			
	Control method		IGBT-driven PWM method, sinusoidal drive			
	Feedback		Serial encoder (incremental/absolute value)			Absolute encoder
	Conditions	Usage/storage temperature	0 to +55 °C / -20 to 65 °C			
		Usage/storage humidity	90% RH or less (non-condensing)			
		Altitude	1000 m or less above sea level			
		Vibration/shock resistance (max.)	5.88 m/s² 10-60 Hz (Continuous operation at resonance point is not allowed) / 19.6 m/s²			
	Configuration		Base mounted			
	Approx. weight	Kg	2.7	4.8	4.8	13.5

Three-phase, 460 V

Servo drive type	R88D-K□		06F-□	10F-□	15F-□	20F-□	30F-□	50F-□	75F-□	150F-□
Applicable servo motor	R88M-K□		40020(F/C)-□	75030(F/C)-□	1K030(F/C)-□	2K030(F/C)-□	3K030(F/C)-□	4K030(F/C)-□	6K010C-□	11K015C-□
			60020(F/C)-□	1K020(F/C)-□	1K530(F/C)-□	2K020(F/C)-□	3K020(F/C)-□	5K030(F/C)-□	7K515C-□	15K015C-□
			–	–	1K520(F/C)-□	–	2K010(F/C)-□	4K020(F/C)-□	–	–
			–	–	90010(F/C)-□	–	–	5K020(F/C)-□	–	–
			–	–	–	–	–	4K510C-□	–	–
			–	–	–	–	–	3K010(F/C)-□	–	–
Basic specifications	Max. Applicable motor capacity	kW	0.6	1.0	1.5	2.0	3.0	5.0	7.5	15.0
	Continuous output current	A (rms)	2.9	2.9	4.7	6.7	9.4	16.5	22.0	33.4
	Input power	Main circuit	3-phase, 380 to 480 VAC + 10 to -15% (50/60Hz)							
	Supply	Control circuit	24 VDC ±15%							
	Control method		IGBT-driven PWM method, sinusoidal drive							
	Feedback	Serial encoder	Incremental or absolute encoder						Absolute encoder	
	Conditions	Usage/storage temperature	0 to +55 °C / -20 to 65 °C							
		Usage/storage humidity	90% RH or less (non-condensing)							
		Altitude	1000 m or less above sea level							
		Vibration/shock resistance	5.88 m/s² 10-60 Hz (Continuous operation at resonance point is not allowed) / 19.6 m/s²							
	Configuration		Base mounted							
	Approx. weight	Kg	1.9			2.7	4.7		13.5	21.0

Servo Drive Specifications

General specifications (for EtherCAT servo drives)

Performance	Frequency characteristics		2 kHz
EtherCAT interface	Command input		EtherCAT commands (for sequence, motion, data setting/reference, monitor, adjustment, and other commands).
	Control Mode (*1 Drive Profile)		CSP, CSV, CST, Homing and Position Profile modes (CiA402 Drive Profile) Homing mode; Position profile mode; Dual touch probe function (Latch function); Torque limit function
I/O signal	Sequence input signal (8 inputs)		Multi-function input x 8 by parameter setting (forward/reverse drive prohibition, emergency stop, external latch, origin proximity, forward/reverse torque limit, general purpose monitor input).
	Sequence output signal (3 outputs)		1 x servo drive error output 2 x multi-function outputs by parameters setting (servo ready, brake release, torque limit detection, zero speed detection, warning output, position completion, error clear attributed, programmable output...)
Integrated functions	USB Communications	Interface	Personal computer/ Connector mini-USB
		Communications standard	Compliant with USB 2.0 standard
		Function	Parameter setting, status monitoring and tuning.
	EtherCAT communications	Communications protocol	IEC 61158 Type 12, IEC 61800-7
		Physical layer	100BASE-TX (IEEE802.3)
		Connectors	RJ45 x 2; ECAT IN: EtherCAT input x 1; ECAT OUT: EtherCAT output x 1
		Communications media	Category 5 or higher(cable with double, aluminium tape and braided shielding is recommended).
		Communications distance	Distance between nodes: 100 m max.
		LED indicators	RUN x 1; ERR x 1; L/A IN (Linck/Activity IN) x 1; L/A OUT (Link/activity OUT) x 1
	Autotuning		Automatic motor parameter setting. One parameter rigidity setting. Inertia detection.
	Dynamic brake (DB)		Built-in and Configurable. Operates during main power OFF, servo alarm, servo OFF or overtravel.
	Regenerative processing		Internal resistor included in models from 600 W to 15 kW. Regenerative resistor externally mounted (option).
	Overtravel (OT) prevention function		DB stop, deceleration stop or coast to stop during P-OT, N-OT operation.
	Encoder divider function		Gear ratio
	Protective functions		Overcurrent, overvoltage, undervoltage, overspeed, overload, encoder error, overheat...
	Analog monitor functions for supervision		Analog monitor of motor speed, speed reference, torque reference, command following error, analog input... The monitoring signals to output and their scaling can be specified with parameters. Number of channels: 2 (Output voltage: ±10V DC).
	Panel operator	Display functions	2 x digit 7-segment LED display shows the drive status, alarm codes, parameters...
		Switches	2 x rotary switches for setting the node address.
	CHARGE lamp		Lights when the main circuit power supply is turned ON.
	Safety terminal	Functions	Safety Torque OFF function to cut off the motor current and stop the motor. Output signal for failure monitoring function.
		Conformed standards	EN ISO13849-1:2008 (PL- d, Performance Level d), IEC61800-5 -2:2007 (function STO, Safe Torque OFF), EN61508:2001 (Safety Integrity Level 2, SIL2), EN954-1:1996 (CAT3).
	External encoder feedback		Serial signal and line-driver A-B-Z encoder for full-close control.

*1 The CSV, CST and Homing modes are supported in the servo drive with version 2.0 or higher.

General specifications (for MECHATROLINK-II servo drives)

Control mode			Position control, velocity control, torque control, full-closed control.
Performance	Frequency characteristics		2 kHz
	Speed zero clamp		Preset velocity command can be clamped to zero by the speed zero clamp input.
	Soft start time setting		0 to 10 s (acceleration, deceleration can be set separately)
Command input	MECHATROLINK-II communication		MECHATROLINK-II commands (for sequence, motion, data setting/reference, monitor, adjustment and other commands).
I/O signal	Sequence input signal (8 inputs)		Multi-function input x 8 by parameter setting (forward/reverse drive prohibition, emergency stop, external latch, origin proximity, forward/reverse torque limit, general purpose monitor input).
	Sequence output signal (3 outputs)		It is possible to output three types of signal form incl.: brake release, servo ready, servo alarm, positioning complete, motor rotation speed detection, torque limit detection, zero speed detection, speed coincidence detection, warning, position command status, speed limit detection, alarm ouput, speed command status.
Integrated functions	USB Communications	Interface	Personal computer/ Connector mini-USB
		Communications standard	Compliant with USB 2.0 standard
		Function	Parameter setting and status monitoring.
	MECHATROLINK-II communications	Communications protocol	MECHATROLINK-II
		Station address	41H to 51 FH (max. number of slaves: 30)
		Tranmission speed	10 Mbps
		Transmission cycle	1, 2 & 4 ms
		Data length	17-bytes and 32-bytes
	Automatic load inertia detection		Automatic motor parameter setting. One parameter rigidity setting.
	Dynamic brake (DB)		Built-in and Configurable. Operates during main power OFF, servo alarm, servo OFF or overtravel.
	Regenerative processing		Internal resistor included in models from 600 W to 5 kW. Regenerative resistor externally mounted (option).
	Overtravel (OT) prevention function		DB stop, deceleration stop or coast to stop during P-OT, N-OT operation.
	Encoder divider function		Optional division possible.
	Protective functions		Overcurrent, overvoltage, undervoltage, overspeed, overload, encoder error, overheat...
	Analog monitor functions for supervision		Analog monitor of motor speed, speed reference, torque reference, command following error, analog input... The monitoring signals to output and their scaling can be specified with parameters. Number of channels: 2 (Output voltage: ±10V DC).
	Panel operator	Display functions	2-digit 7-segment LED display shows the drive status, alarm codes, parameters... MECHATROLINK-II communications status LED indicator (COM).
		Switches	2 x rotary switches for setting the MECHATROLINK-II node address.
	CHARGE lamp		Lights when the main circuit power supply is turned ON.
	Safety terminal	Functions	Safety Torque OFF function to cut off the motor current and stop the motor. Output signal for failure monitoring function.
		Conformed standards	EN ISO13849-1:2008 (PL- d, Performance Level d), IEC61800-5 -2:2007 (function STO, Safe Torque OFF), EN61508:2001 (Safety Integrity Level 2, SIL2), EN954-1:1996 (CAT3).
	External encoder feedback		Serial signal and line-driver A-B-Z encoder for full-close control.

Servo Drive Specifications

General specifications (for Analog/Pulse servo drives)

Control mode				7 modes selectables by parameter: (1) position control, (2) velocity control, (3) torque control, (4) position/velocity control, (5) position/torque control, (6) velocity/torque control and (7) full-closed control.
Speed/ torque control	Performance		Frequency characteristics	2 kHz
			Speed zero clamp	Preset velocity command can be clamped to zero by the speed zero clamp input.
			Soft start time setting	0 to 10 s (acceleration, deceleration can be set separately). S-curve acceleration/deceleration is also available.
	Input signal	Speed control	Speed reference voltage	6 VDC at rated speed: set at delivery (the scale and polarity can be set by parameters).
			Torque limit	3 VDC at rated torque (torque can be limited separately in positive/negative direction).
			Preset speed control	Preset speed is selectable from 8 internal settings by digital inputs.
		Torque control	Torque reference voltage	3 VDC at rated torque: set at delivery (the scale and polarity can be set by parameters).
			Speed limit	Speed limit can be set by parameter.
Position control	Input signal	Command pulse	Input pulse type	Sign + pulse train, 90° phase displacement 2-phase pulse (A-phase+ B-phase) or CCW/CW pulse train.
			Input pulse frequency	4 Mpps max. (200 Kpps max. at open collector).
			Command pulse scaling (Electronic Gear)	Applicable scaling ratio: 1/1000 - 1000 Any value of 1-20^{20} can be set for numerator (encoder resolution) and denominator (command pulse resolution per motor revolution). The combination has to be within the range shown above.
Full-closed control	Input signal	Command pulse	Input pulse type	Sign + pulse train, 90° phase displacement 2-phase pulse (A-phase+ B-phase) or CCW/CW pulse train.
			Input pulse frequency	4 Mpps max. (200 Kpps max. at open collector).
			Command pulse scaling (Electronic Gear)	Applicable scaling ratio: 1/1000 - 1000 Any value of 1-20^{20} can be set for numerator (encoder resolution) and denominator (command pulse resolution). The combination has to be within the range shown above.
	External encoder scaling			Applicable scaling ratio: 1/20 - 160 Any value of 1-20^{20} can be set for numerator (encoder resolution) and denominator (external encoder resolution per motor revolution). The combination has to be within the range shown above.
I/O signal	Position signal output			A-phase, B.phase, Z-phase line driver output and Z-phase open-collector output.
	Sequence input signal (10 inputs)			Multi-function input x 10 by parameter setting (servo ON, control mode switching, forward/reverse drive prohibition, vibration filter switching, gain switching, electronic gear switching, error counter reset, pulse prohibition, alarm reset, internal speed selection, torque limit switching, zero speed, emergency stop, inertia ratio switching, velocity/torque command sign). Dedicated input x 1 (SEN: sensor ON, ABS data request).
	Sequence output signal (4 outputs)			It is possible to output four types of signal form incl.: brake release, servo ready, servo alarm, positioning complete, motor rotation speed detection, torque limit detection, zero speed detection, speed coincidence detection, warning, position command status, speed limit detection, speed command status.
Integrated functions	USB Communications		Interface	Personal computer/ Connector mini-USB
			Communications standard	Compliant with USB 2.0 standard
			Function	Parameter setting and status monitoring
	Automatic load inertia detection			Automatic motor parameter setting. One parameter rigidity setting.
	Dynamic brake (DB)			Built-in and Configurable. Operates during main power OFF, servo alarm, servo OFF or overtravel.
	Regenerative processing			Internal resistor included in models from 600 W to 15 kW. Regenerative resistor externally mounted (option).
	Overtravel (OT) prevention function			DB stop, deceleration stop or coast to stop during P-OT, N-OT operation
	Encoder divider function			Optional division possible
	Electronic gearing (Numerator/Denominator)			Up to 4 electronic gear numerators by combining with inputs.
	Internal speed setting function			8 speeds may be set internally
	Protective functions			Overcurrent, overvoltage, undervoltage, overspeed, overload, encoder error, overheat...
	Analog monitor functions for supervision			Analog monitor of motor speed, speed reference, torque reference, command following error, analog input... The monitoring signals to output and their scaling can be specified by parameters. Number of channels: 2 (Output voltage: ±10V DC)
	Panel operator		Display functions	6-digit 7-segment LED display shows the drive status, alarm codes, parameters...
			Switches	Used to set/monitor parameters and drive condition (5 key switches).
	CHARGE lamp			Lights when the main circuit power supply is turned ON.
	Safety terminal		Functions	Safety torque OFF function to cut off the motor current and stop the motor. Output signal for failure monitoring function.
			Conformed standards	EN ISO13849-1:2008 (PL- d, Performance Level d), IEC61800-5 -2:2007 (function STO, Safe Torque OFF), EN61508:2001 (Safety Integrity Level 2, SIL2), EN954-1:1996 (CAT3).
	External encoder feedback			Serial signal and line-driver A-B-Z encoder for full-close control
	Expansion connector			Serial bus for option board

Servo Drive Part Names

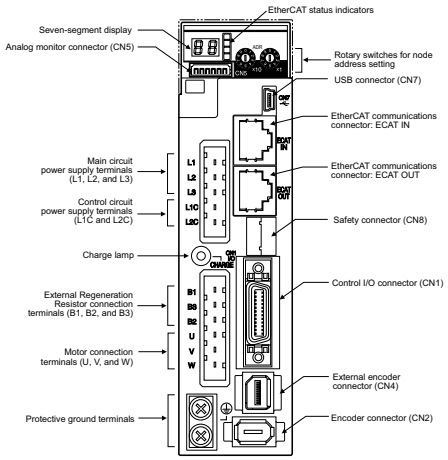

EtherCAT servo drives

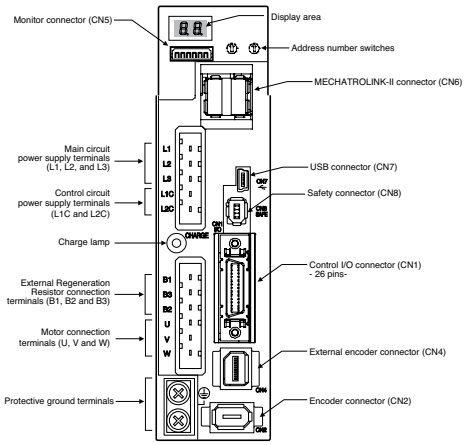

MECHATROLINK-II servo drives

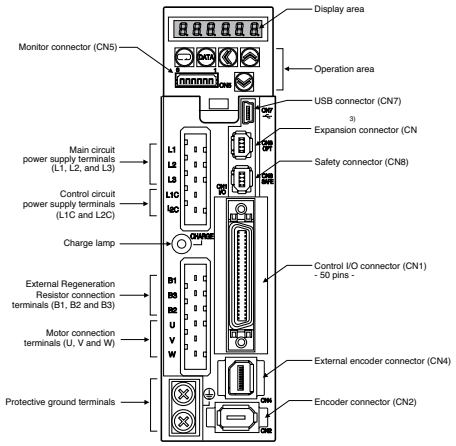

Analog/pulse servo drives

Note: the above pictures show 230 V servo drives models only. The 460 V servo drives have 24 VDC power input terminals for control circuit instead of L1C and L2C terminals.

Dimensions

Unit: mm

SERVO MOTORS

Type 3000 r/min motors (120 V, 100 W and 230 V, 50 - 100 W)

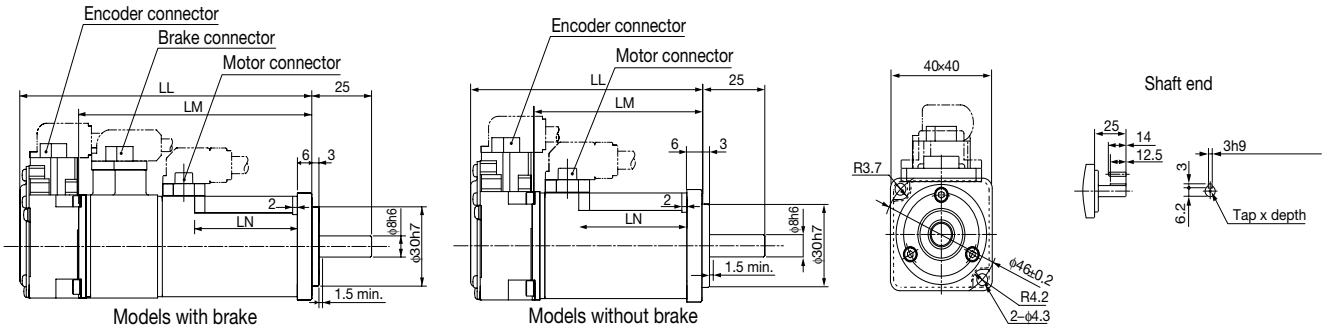

Dimensions (mm)	Without brake		With brake		LN	Shaft End Dimensions	Approx. Weight (kg)	
Model	LL	LM	LL	LM		Tap x Depth	Without brake	With brake
R88M-K05030(H/T)-□S2	72	48	102	78	23	M3 x 6L	0.32	0.53
R88M-K10030(L/S/H/T)-□S2	92	68	122	98	43		0.47	0.68

Type 3000 r/min motors (120 V, 200 - 400 W and 230 V, 200 - 750 W)

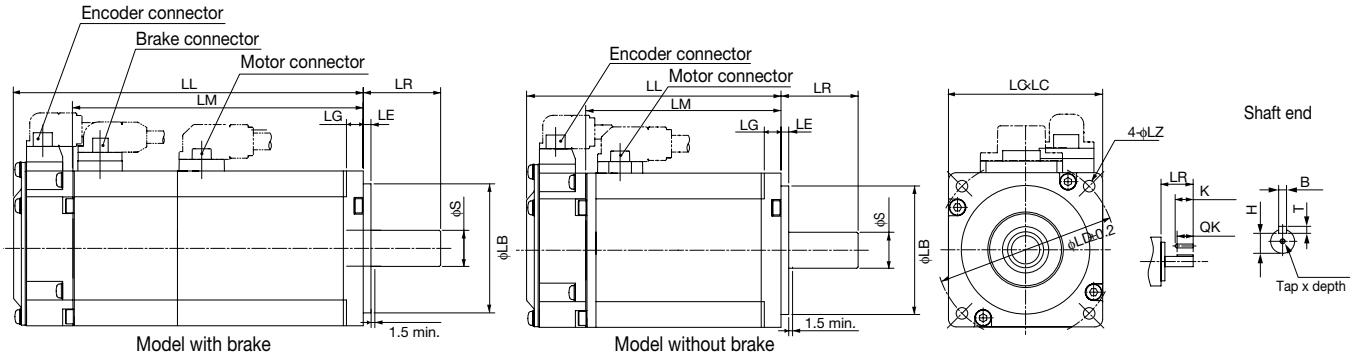

Dimensions (mm)	Without brake		With brake		LR	Flange surface						Shaft End Dimensions							Approx. Weight (kg)	
Model	LL	LM	LL	LM		LB	LC	LD	LE	LG	LZ	S	K	QK	H	B	T	Tap x Depth	Without brake	With brake
R88M-K20030(H/T)-□S2	79.5	56.5	116	93	30	50^{h7}	60	70	3	6.5	4.5	11^{h6}	20	18	8.5	4^{h9}	4	M4x8L	0.82	1.3
R88M-K20030(L/S)-□S2	79.5	56.5	116	93	30	50^{h7}	60	70	3	6.5	4.5	11^{h6}	20	18	8.5	4^{h9}	4	M4x8L	0.78	1.2
R88M-K40030(H/T)-□S2	99	76	135.5	112.5	30	50^{h7}	60	70	3	6.5	4.5	14^{h6}	25	22.5	11	5^{h9}	5	M5x10L	1.2	1.7
R88M-K40030(L/S)-□S2	99	76	135.5	112.5	30	50^{h7}	60	70	3	6.5	4.5	14^{h6}	25	22.5	11	5^{h9}	5	M5x10L	1.2	1.6
R88M-K75030(H/T)-□S2	112.2	86	148.2	122.2	35	70^{h7}	80	90	3	8	6	19^{h6}	25	22	15.5	6^{h9}	6	M5x10L	2.3	3.1

Type 3000 r/min motors (230 V, 1 - 5 kW)

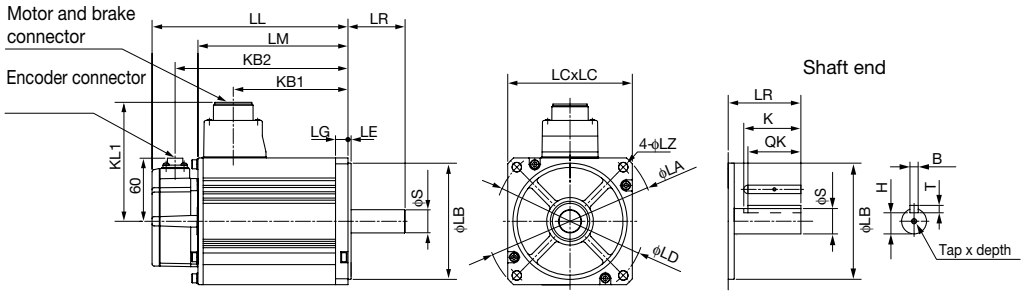

Model	Without brake					With brake					Flange surface							Shaft End Dimensions							Approx. Weight (kg)	
R88M-K□	LL	LM	KB1	KB2	KL1	LL	LM	KB1	KB2	KL1	LR	LA	LB	LC	LD	LE	LG	S	Tap x Depth	K	QK	H	B	T	Without brake	With brake
1K030(H/T)-□S2	141	97	66	119	101	168	124	66	146	101	55	135	95^{h7}	100	115	3	10	19^{h6}	M5 x 12L	45	42	15.5	6^{h9}	6	3.5	4.5
1K530(H/T)-□S2	159.5	115.5	84.5	137.5	101	186.5	142.5	84.5	164.5	101	55	135	95^{h7}	100	115	3	10	19^{h6}	M5 x 12L	45	42	15.5	6^{h9}	6	4.4	5.4
2K030(H/T)-□S2	178.5	134.5	103.5	156.5	101	205.5	161.5	103.5	183.5	101	55	135	95^{h7}	100	115	3	10	19^{h6}	M5 x 12L	45	42	15.5	6^{h9}	6	5.3	6.3
3K030(H/T)-□S2	190	146	112	168	113	215	171	112	193	113	55	162	110^{h7}	120	145	3	12	22^{h6}	M5 x 12L	45	41	18	8^{h9}	7	8.3	9.4
4K030(H/T)-□S2	208	164	127	186	118	233	189	127	211	118	65	145	110^{h7}	130	165	6	12	24^{h6}	M8 x 20L	55	51	20	8^{h9}	7	11.0	12.6
5K030(H/T)-□S2	243	199	162	221	118	268	224	162	246	118	65	145	110^{h7}	130	165	6	12	24^{h6}	M8 x 20L	55	51	20	8^{h9}	7	14.0	16.0

Dimensions

Unit: mm

SERVO MOTORS

Type 3000 r/min motors (460 V, 750 W - 5 kW)

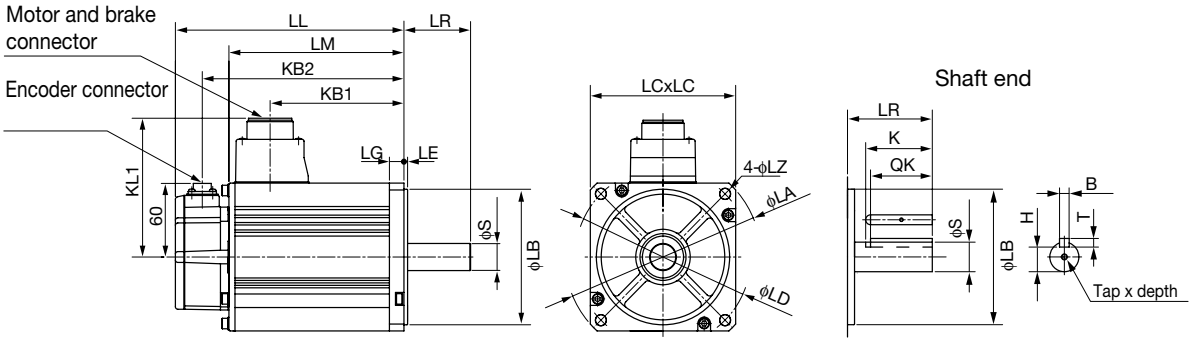

Model	Without brake					With brake					Flange surface								Shaft End Dimensions							Approx. Weight (kg)	
R88M-K□	LL	LM	KB1	KB2	KL1	LL	LM	KB1	KB2	KL1	LR	LA	LB	LC	LD	LE	LG	S	Tap x Depth	K	QK	H	B	T	Without brake	With brake
75030(F/C)-□S2	131.5	87.5	56.5	109.5	101	158.5	114.5	53.5	136.5	103	55	135	95^{h7}	100	115	3	10	19^{h6}	M5 x 12L	45	42	15.5	6^{h9}	6	3.1	4.1
1K030(F/C)-□S2	141	97	66	119	101	168	124	66	146	101	55	135	95^{h7}	100	115	3	10	19^{h6}	M5 x 12L	45	42	15.5	6^{h9}	6	3.5	4.5
1K530(F/C)-□S2	159.5	115.5	84.5	137.5	101	186.5	142.5	84.5	164.5	101	55	135	95^{h7}	100	115	3	10	19^{h6}	M5 x 12L	45	42	15.5	6^{h9}	6	4.4	5.4
2K030(F/C)-□S2	178.5	134.5	103.5	156.5	101	205.5	161.5	103.5	183.5	101	55	135	95^{h7}	100	115	3	10	19^{h6}	M5 x 12L	45	42	15.5	6^{h9}	6	5.3	6.3
3K030(F/C)-□S2	190	146	112	168	113	215	171	112	193	113	55	162	110^{h7}	120	145	3	12	22^{h6}	M5 x 12L	45	41	18	8^{h9}	7	8.3	9.4
4K030(F/C)-□S2	208	164	127	186	118	233	189	127	211	118	65	145	110^{h7}	130	165	6	12	24^{h6}	M8 x 20L	55	51	20	8^{h9}	7	11.0	12.6
5K030(F/C)-□S2	243	199	162	221	118	268	224	162	246	118	65	145	110^{h7}	130	165	6	12	24^{h6}	M8 x 20L	55	51	20	8^{h9}	7	14.0	16.0

Type 2000 r/min motors

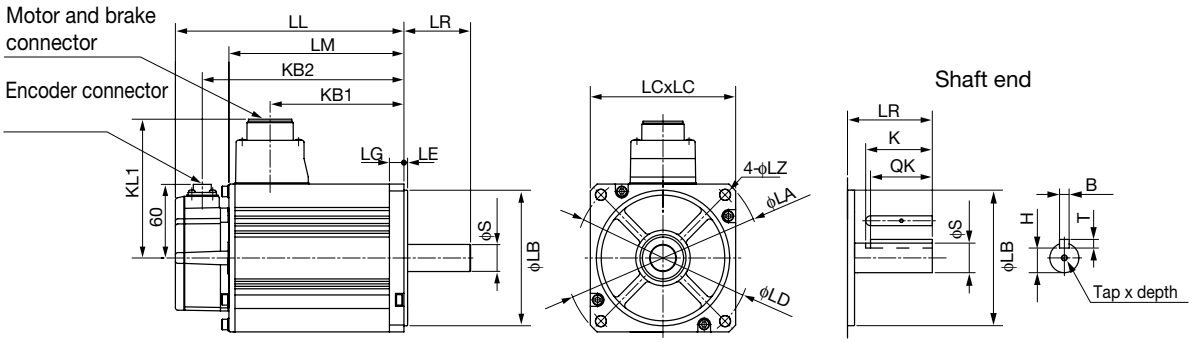

230 V, 1 kW - 5 kW

Model	Without brake					With brake					Flange surface								Shaft End Dimensions							Approx. Weight (kg)	
R88M-K□	LL	LM	KB1	KB2	KL1	LL	LM	KB1	KB2	KL1	LR	LA	LB	LC	LD	LE	LG	LZ	S	Tap x Depth	K	QK	H	B	T	Without brake	With brake
1K020(H/T)-□S2	138	94	60	116	116	163	119	60	141	116	55	145	110^{h7}	130	165	6	12	9	22^{h6}	M5 x 12L	45	41	18	8^{h9}	7	5.2	6.7
1K520(H/T)-□S2	155.5	111.5	77.5	133.5	116	180.5	136.5	77.5	158.5	116	55	145	110^{h7}	130	165	6	12	9	22^{h6}	M5 x 12L	45	41	18	8^{h9}	7	6.7	8.2
2K020(H/T)-□S2	173	129	95	151	116	198	154	95	176	116	55	145	110^{h7}	130	165	6	12	9	22^{h6}	M5 x 12L	45	41	18	8^{h9}	7	8.0	9.5
3K020(H/T)-□S2	208	164	127	186	118	233	189	127	211	118	65	145	110^{h7}	130	165	6	12	9	24^{h6}	M8 x 20L	55	51	20	8^{h9}	7	11.0	12.6
4K020(H/T)-□S2	177	133	96	155	140	202	158	96	180	140	70	233	114.3^{h7}	176	200	3.2	18	13.5	35^{h6}	M12 x 25L	55	50	30	10^{h9}	8	15.5	18.7
5K020(H/T)-□S2	202	158	96	180	140	221	177	115	199	140	70	233	114.3^{h7}	176	200	3.2	18	13.5	35^{h6}	M12 x 25L	55	51	30	10^{h9}	8	18.6	21.8

460 V, 400 W - 5 kW

Model	Without brake					With brake					Flange surface								Shaft End Dimensions							Approx. Weight (kg)	
R88M-K□	LL	LM	KB1	KB2	KL1	LL	LM	KB1	KB2	KL1	LR	LA	LB	LC	LD	LE	LG	LZ	S	Tap x Depth	K	QK	H	B	T	Without brake	With brake
40020(F/C)-□S2	131.5	87.5	56.5	109.5	101	158.5	114.5	53.5	136.5	103	55	135	95^{h7}	100	115	3	10	9	19^{h6}	M5 x 12L	45	42	15.5	6^{h9}	6	3.1	4.1
60020(F/C)-□S2	141	97	66	119	101	168	124	63	146	103	55	135	95^{h7}	100	115	3	10	9	19^{h6}	M5 x 12L	45	42	15.5	6^{h9}	6	3.5	4.5
1K020(F/C)-□S2	138	94	60	116	116	163	119	60	141	116	55	145	110^{h7}	130	165	6	12	9	22^{h6}	M5 x 12L	45	41	18	8^{h9}	7	5.2	6.7
1K520(F/C)-□S2	155.5	111.5	77.5	133.5	116	180.5	136.5	77.5	158.5	116	55	145	110^{h7}	130	165	6	12	9	22^{h6}	M5 x 12L	45	41	18	8^{h9}	7	6.7	8.2
2K020(F/C)-□S2	173	129	95	151	116	198	154	95	176	116	55	145	110^{h7}	130	165	6	12	9	22^{h6}	M5 x 12L	45	41	18	8^{h9}	7	8.0	9.5
3K020(F/C)-□S2	208	164	127	186	118	233	189	127	211	118	65	145	110^{h7}	130	165	6	12	9	24^{h6}	M8 x 20L	55	51	20	8^{h9}	7	11.0	12.6
4K020(F/C)-□S2	177	133	96	155	140	202	158	96	180	140	70	233	114.3^{h7}	176	200	3.2	18	13.5	35^{h6}	M12 x 25L	55	50	30	10^{h9}	8	15.5	18.7
5K020(F/C)-□S2	202	158	96	180	140	221	177	115	199	140	70	233	114.3^{h7}	176	200	3.2	18	13.5	35^{h6}	M12 x 25L	55	51	30	10^{h9}	8	18.6	21.8

Dimensions

Unit: mm

SERVO MOTORS

Type 1500 r/min motors (230 V or 460 V, 7.5kW)

Dimensions (mm)	Without brake							With brake							Approx. Mass (Kg)	
Model R88M-K□	LL	LM	KB1	KB2	L1	L2	L3	LL	LM	KB1	KB2	L1	L2	L3	Without brake	With brake
7K515T-□S2	312	268	219	290	117.5	117.5	149	337	293	253	315	117.5	152.5	183	36.4	40.4
7K515C-□S2	312	268	219	290	117.5	117.5	149	337	293	253	315	117.5	152.5	183	36.4	40.4

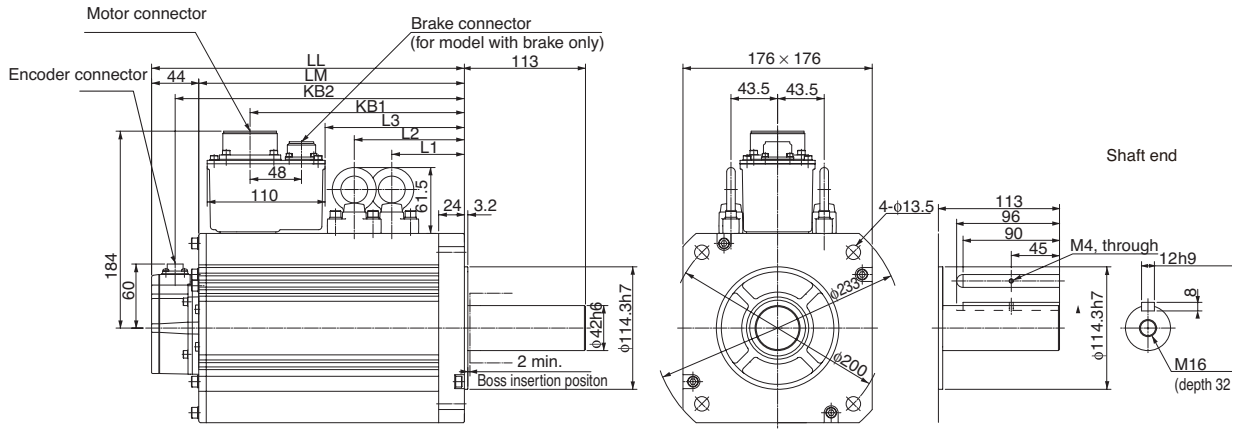

Type 1500 r/min motors (460 V, 11 - 15 kW)

Dimensions (mm)	Without brake							With brake							Approx. Mass (Kg)	
Model R88M-K□	LL	LM	KB1	KB2	L1	L2	L3	LL	LM	KB1	KB2	L1	L2	L3	Without brake	With brake
11K015C-□S2	316	272	232	294	124.5	124.5	162	364	320	266	342	124.5	159.5	196	52.7	58.9
15K015C-□S2	384	340	300	362	158.5	239	230	432	388	334	410	158.5	193.5	264	70.2	76.3

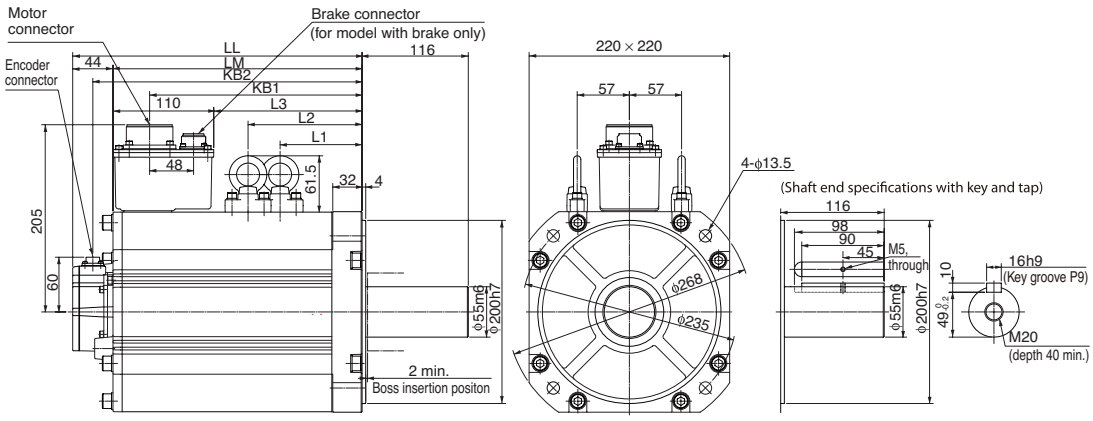

Type 1000 r/min motors (230 V, 900W - 3 kW/ 460 V, 900W - 3 kW)

Dimensions (mm)		Without brake					With brake					LR	Flange surface							Shaft End Dimensions							Approx. Mass (Kg)	
Voltage	Model R88M-K□	LL	LM	KB1	KB2	KL1	LL	LM	KB1	KB2	KL1		LA	LB	LC	LD	LE	LG	LZ	S	Tap x Depth	K	QK	H	B	T	Without brake	With brake
230	90010(H/T)-□S2	155.5	111.5	77.5	133.5	116	180.5	136.5	77.5	158.5	116	55	165	110^{h7}	130	145	6	12	9	22^{h6}	M5x 12L	45	41	18	8^{h9}	7	6.7	8.2
	2K010(H/T)-□S2	163.5	119.5	82.2	141.5	140	209.5	165.5	128.5	187.5	140	80	233	114.3^{h7}	176	200	3.2	18	13.5	35^{h6}	M12x 25L	55	50	30	10^{h9}	8	14	20
	3K010(H/T)-□S2	208	164	127	186		234.5	190.5		212.5																	17.5	23.5
400	90010(F/C)-□S2	155.5	111.5	77.5	133.5	116	180.5	136.5	74.5	158.5	118	55	165	110^{h7}	130	145	6	12	9	22^{h6}	M5x 10L	45	41	18	8^{h9}	7	6.7	8.2
	2K010(F/C)-□S2	163.5	119.5	82.5	141.5	140	188.5	144.5	82.5	166.5	140	80	233	114.3^{h7}	176	200	3.2	18	13.5	35^{h6}	M12x 25L	55	50	30	10^{h9}	8	14	17.5
	3K010(F/C)-□S2	209.5	165.5	128.5	187.5		234.5	190.5	128.5	212.5																	20	23.5

Servo Motor Specifications

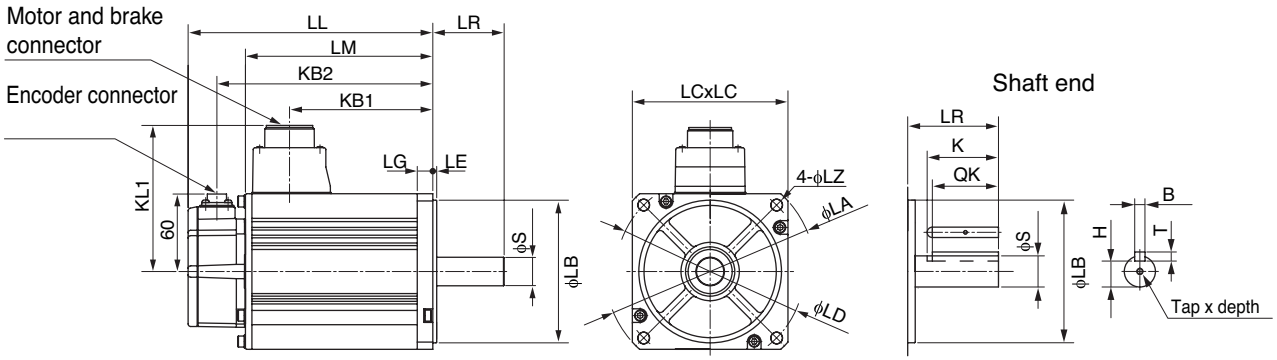

Type 1000 r/min motors (460 V, 4.5 kW)

Dimensions (mm)	Without brake						With brake						Approx. Mass (Kg)	
Model R88M-K□	LL	LM	KB1	KB2	L1	L2	LL	LM	KB1	KB2	L1	L2	Without brake	With brake
4K510C-□S2	266	222	185	244	98	98	291	247	185	269	98	133	29.4	33.3

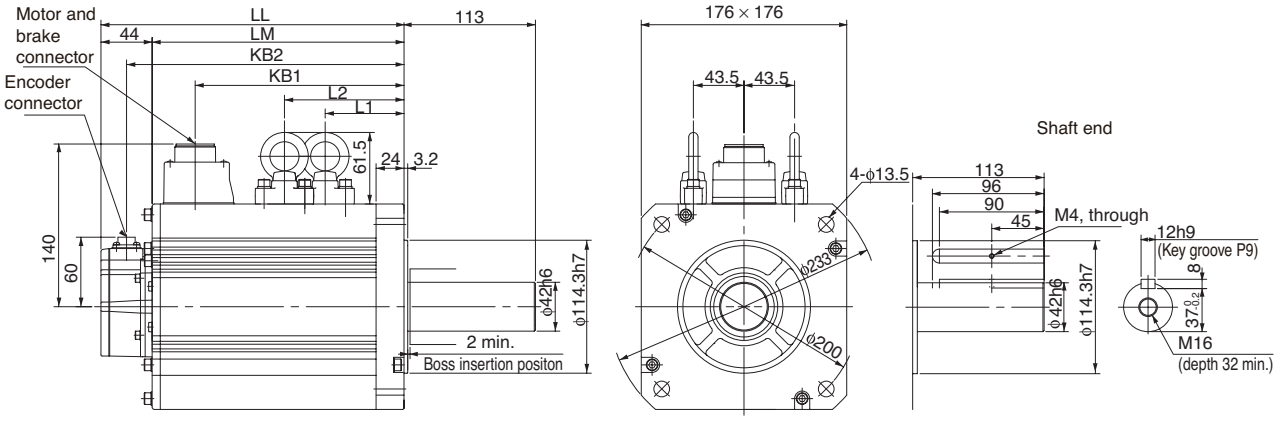

Type 1000 r/min motors (460 V, 6 kW)

Dimensions (mm)	Without brake							With brake							Approx. Mass (Kg)	
Model R88M-K□	LL	LM	KB1	KB2	L1	L2	L3	LL	LM	KB1	KB2	L1	L2	L3	Without brake	With brake
6K010C-□S2	312	268	219	290	117.5	117.5	149	337	293	253	315	117.5	152.5	183	36.4	40.4

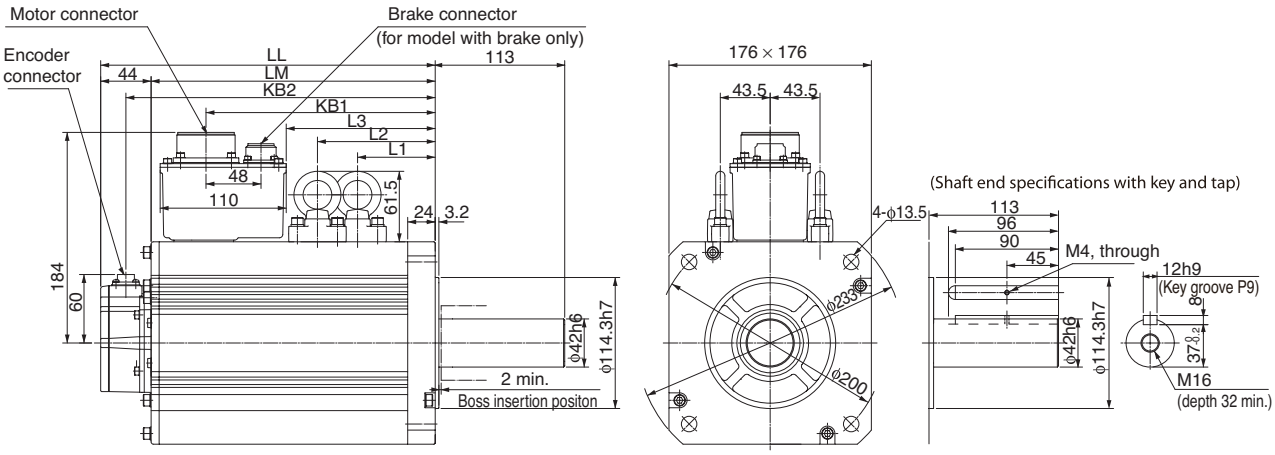

Dimensions

SERVO DRIVES

R88D-KTA5L/01L, R88D-KNA5L/01L-□ (120 V, 50 - 100W)
R88D-KT01H/02H, R88D-KN01H/02H-□ (230 V, 100 - 200W)

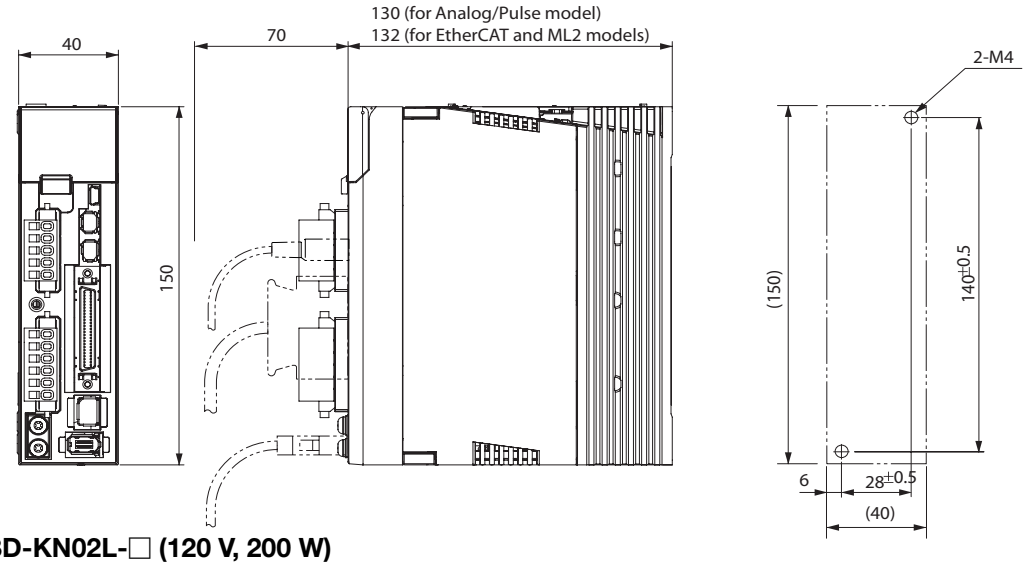

R88D-KT02L, R88D-KN02L-□ (120 V, 200 W)
R88D-KT04H, R88D-KN04H-□ (230 V, 400 W)

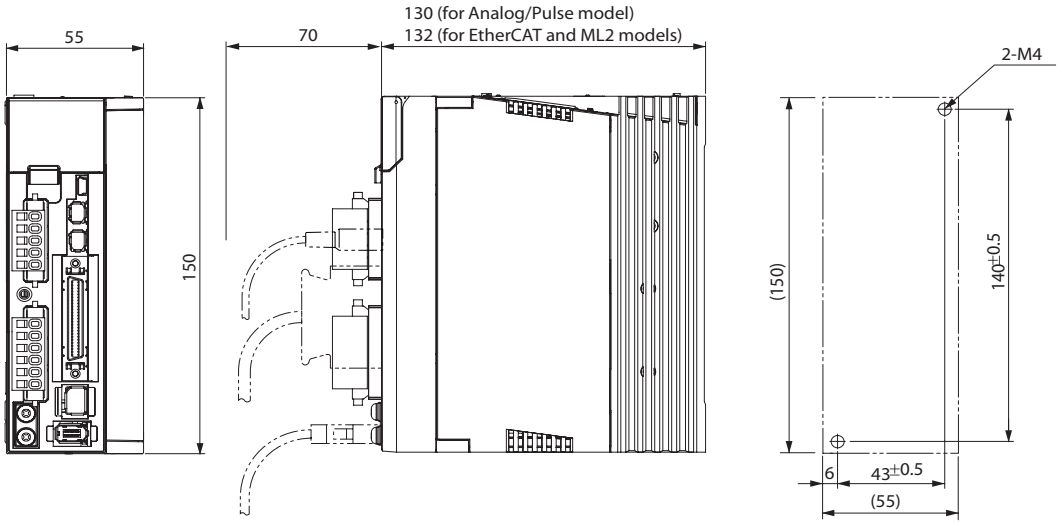

R88D-KT04L, R88D-KN04L-□ (120 V, 400 W)
R88D-KT08H, R88D-KN08H-□ (230 V, 750 W)

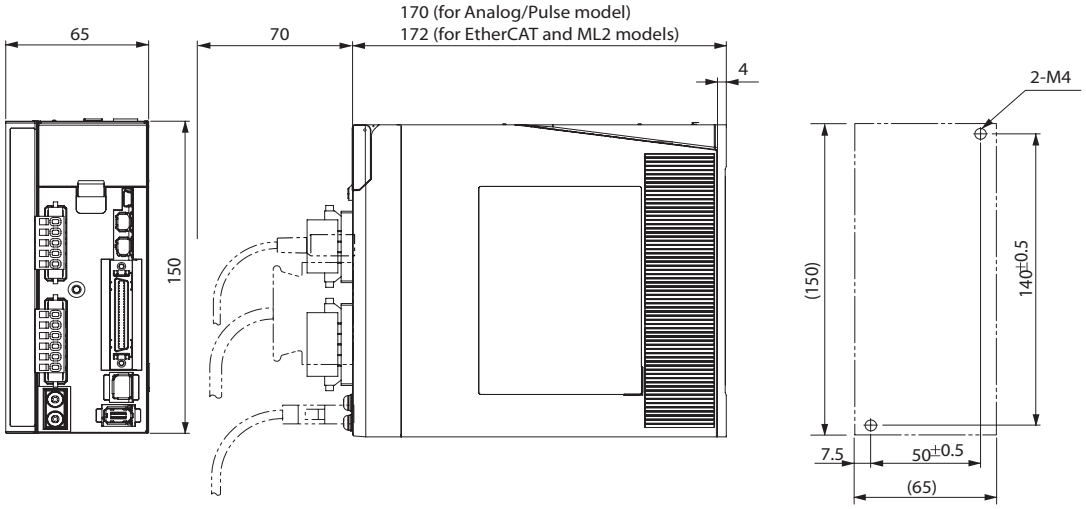

Dimensions

Unit: mm

SERVO DRIVES

R88D-KT10H/15H,
R88D-KN10H/15H-□
(230 V, 1 - 1.5 kW)

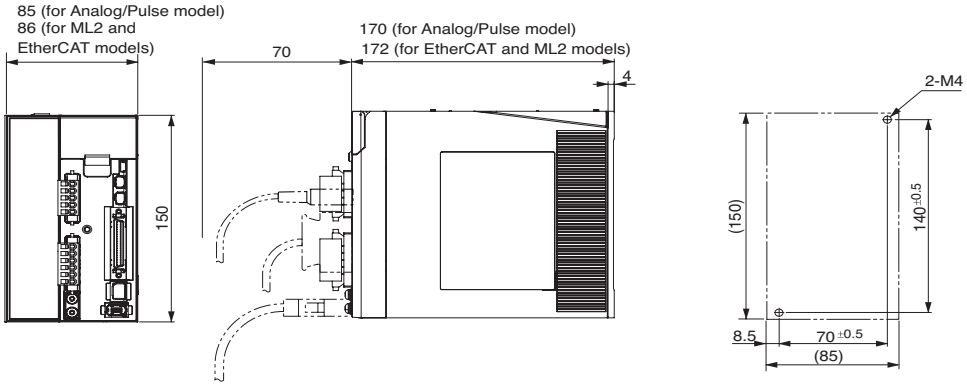

R88D-KT20H,
R88D-KN20H-□ (230 V, 2 kW)

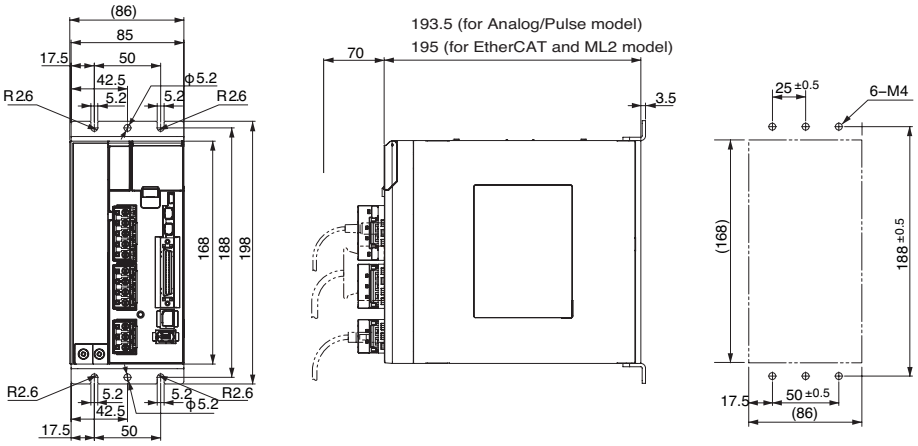

R88D-KT30H/50H,
R88D-KN30H/50H-□
(230 V, 3 - 5 kW)

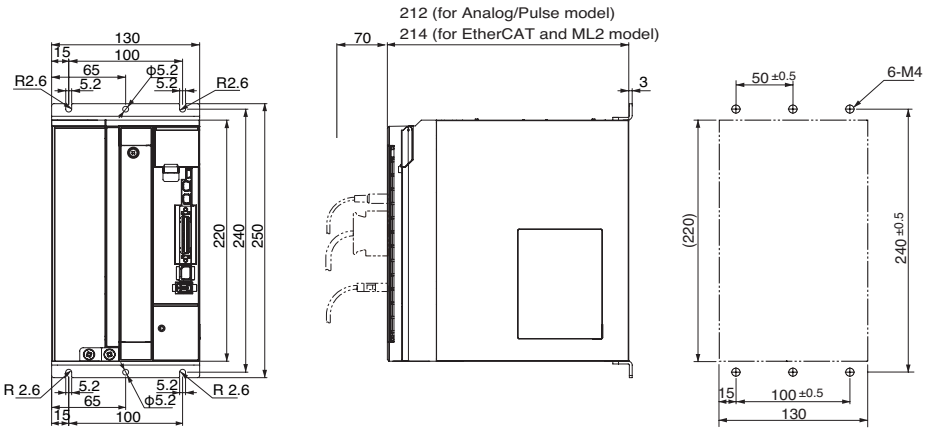

R88D-KT06F/10F/15F,
R88D-KN06F/10F/15F-□
(460 V, 600 W - 1.5 kW)

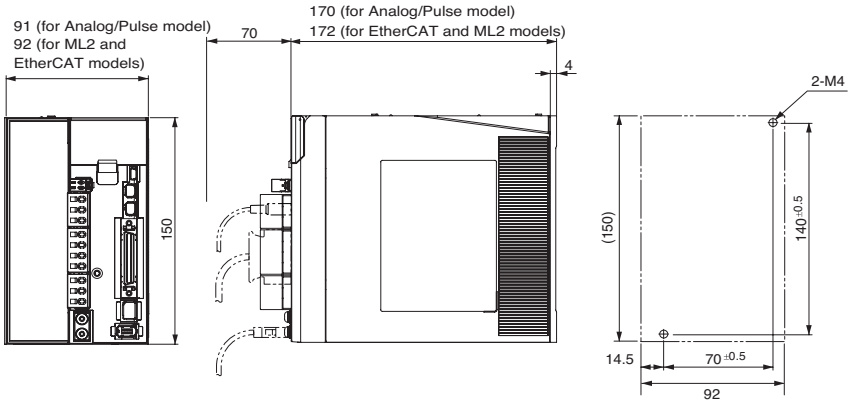

Dimensions

Unit: mm

SERVO DRIVES

R88D-KT20F, R88D-KN20F-□ (460 V, 2 kW)

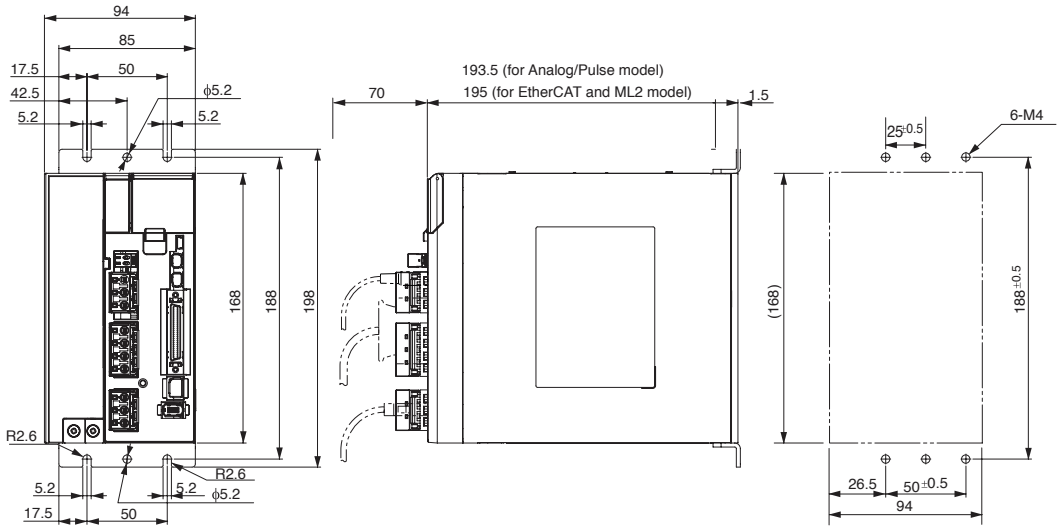

R88D-KT30F/50F, R88D-KN30F/50F-□ (460 V, 3 - 5 kW)

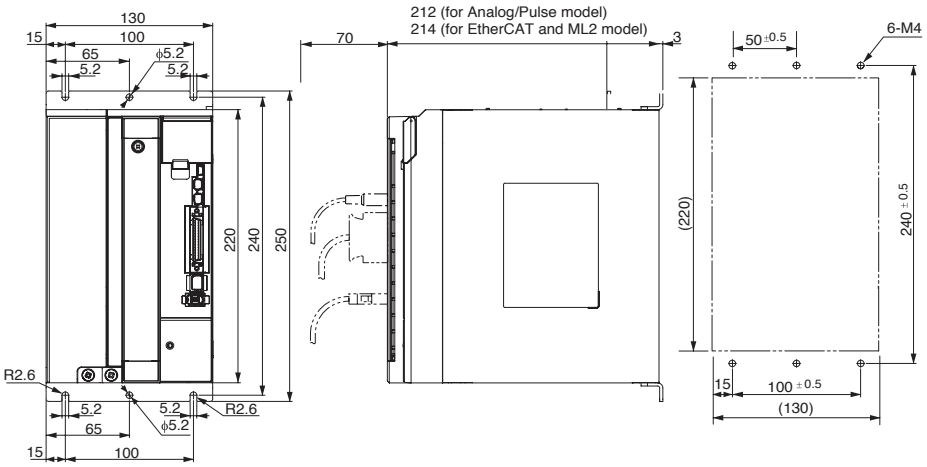

R88D-KT75H, R88D-KN75H-ECT (230 V, 7.5 kW)
R88D-KT75F, R88D-KN75F-ECT (460 V, 7.5 kW)

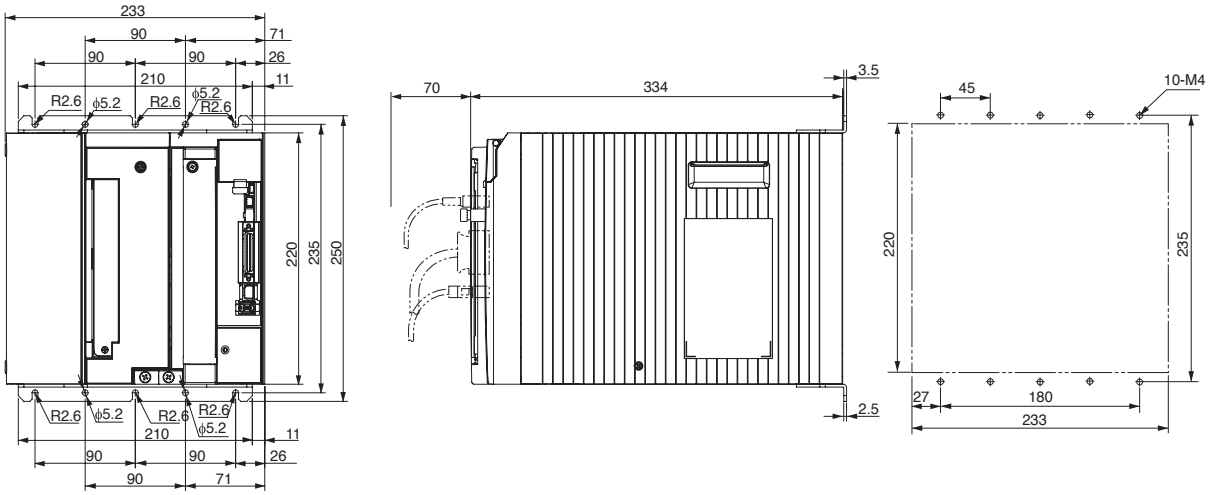

Dimensions

Unit: mm

SERVO DRIVES

R88D-KT150F, R88D-KN150F-ECT (460 V, 15 kW)

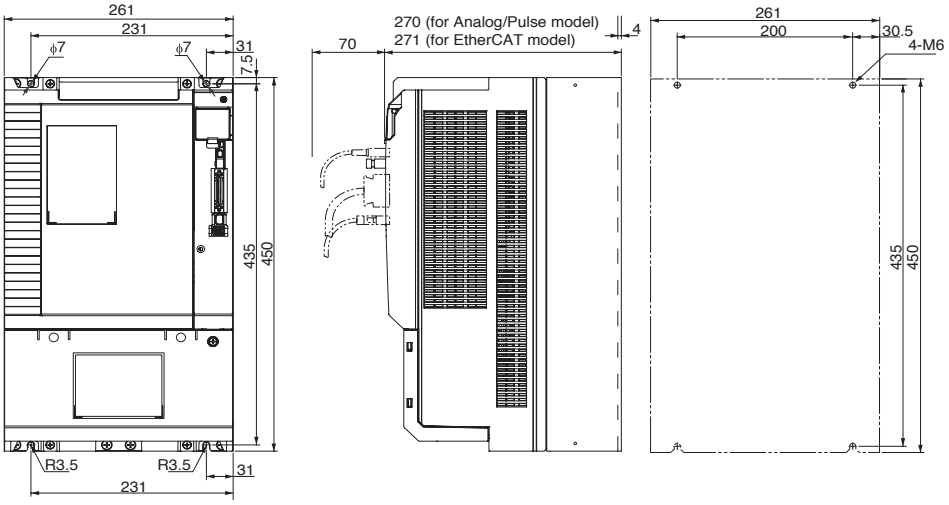

Filters

Filter Model	External dimensions			Mount dimensions	
	H	W	D	M1	M2
R88A-FIK102-RE	190	42	44	180	20
R88A-FIK104-RE	190	57	30	180	30
R88A-FIK107-RE	190	64	35	180	40
R88A-FIK114-RE	190	86	35	180	60
R88A-FIK222-RE	291	130	45	278	100
R88A-FIK304-RE	196	92	40	186	70
R88A-FIK306-RE	238	94	40	228	70
R88A-FIK312-RE	291	130	40	278	100
R88A-FIK330-RE	305	233	50	288	180
R88A-FIK350-RE	506	261	52	491	200

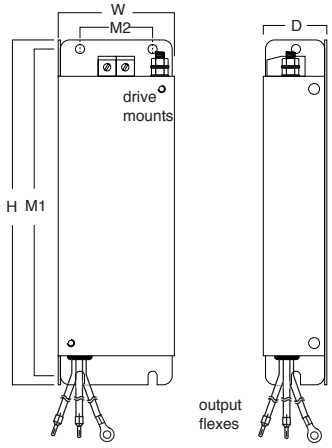

Installation

Single-phase, 120 VAC (for EtherCAT and MECHATROLINK-II servo drives)

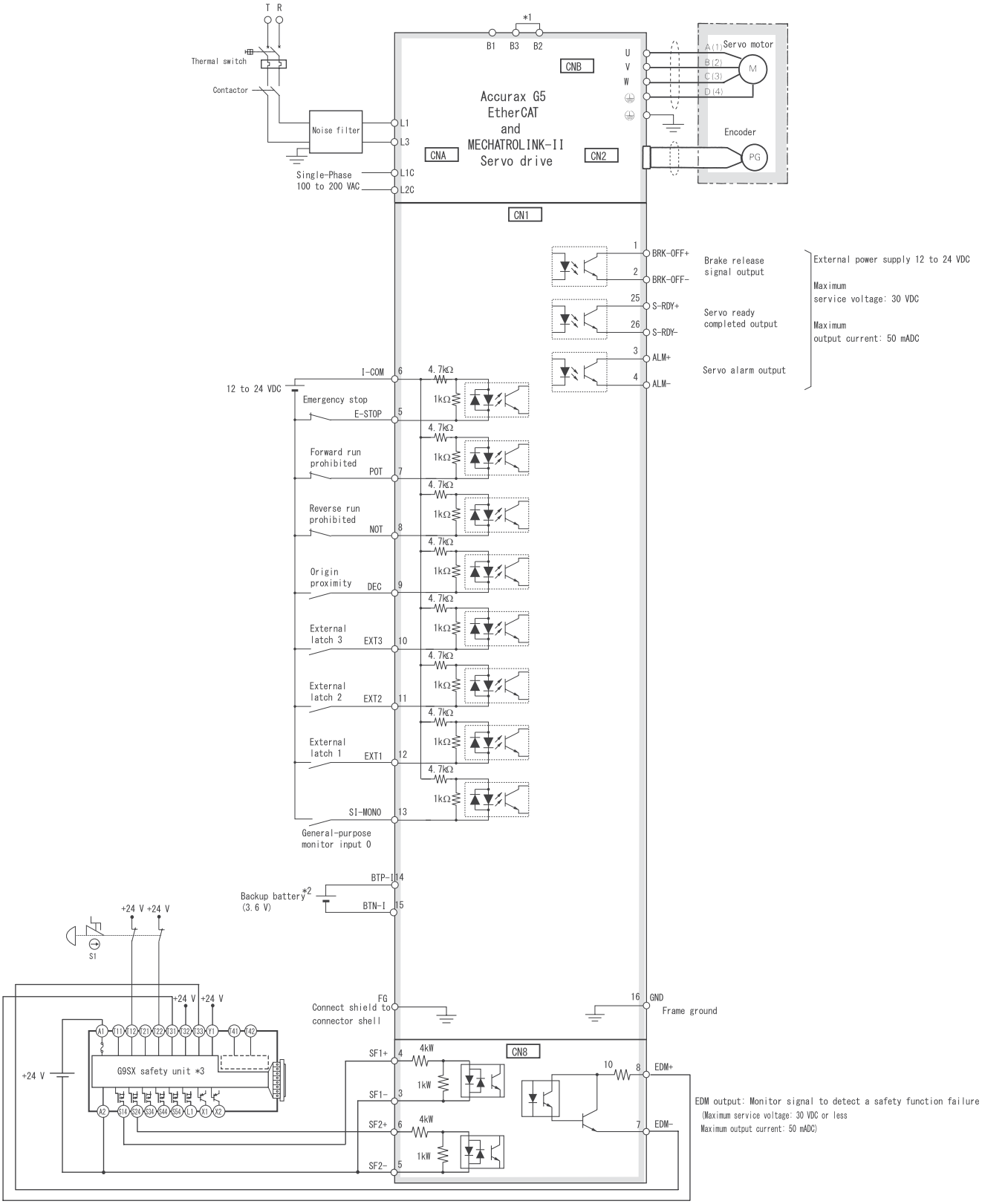

*1 For servo drives from 400 W, B2 and B3 are short-circuited. If the internal regenerative resistor is insufficient, remove the wire between B2 and B3 and connect an external regenerative resistor between B1 and B2.
*2 For use only with an absolute encoder. If a backup battery is connected to CN1 I/O connector, an encoder cable with a battery is not required.
*3 Wiring diagram example using the G9SX safety unit. If a safety unit is not used, keep the factory safety bypass connector installed in the CN8.

Note: The input function of pins 5 and 7 to 13, and output function of pins 1, 2, 25 and 26, can be changed via parameter settings.

Installation

Single-phase, 230 VAC (for EtherCAT and MECHATROLINK-II servo drives)

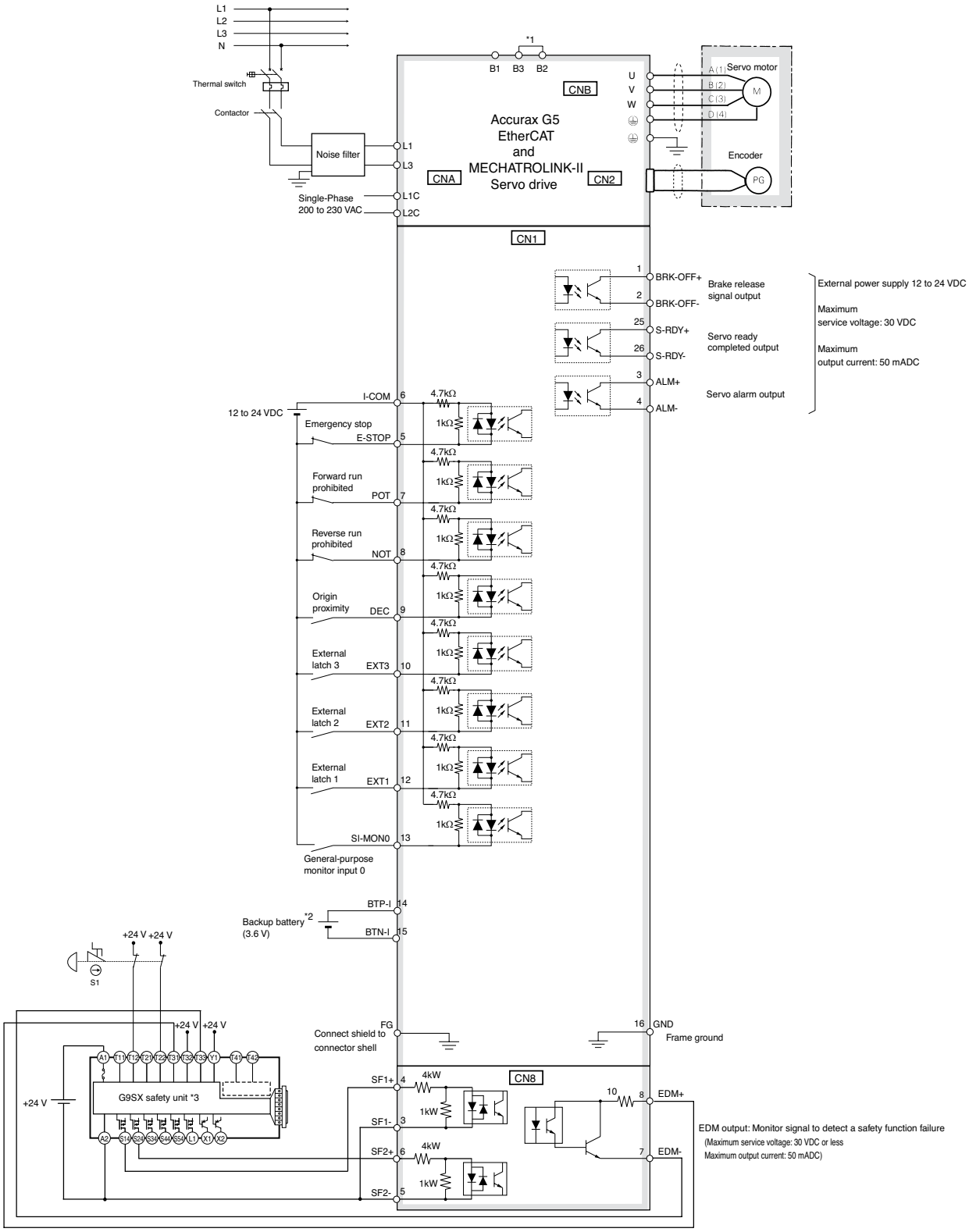

*1 For servo drives from 750 W, B2 and B3 are short-circuited. If the internal regenerative resistor is insufficient, remove the wire between B2 and B3 and connect an external regenerative resistor between B1 and B2.
*2 For use only with an absolute encoder. If a backup battery is connected to CN1 I/O connector, an encoder cable with a battery is not required.
*3 Wiring diagram example using the G9SX safety unit. If a safety unit is not used, keep the factory safety bypass connector installed in the CN8.

Note: The input function of pins 5 and 7 to 13, and output function of pins 1, 2, 25 and 26, can be changed via parameter settings.

Installation

Three-phase, 230 VAC (for EtherCAT and MECHATROLINK-II servo drives)

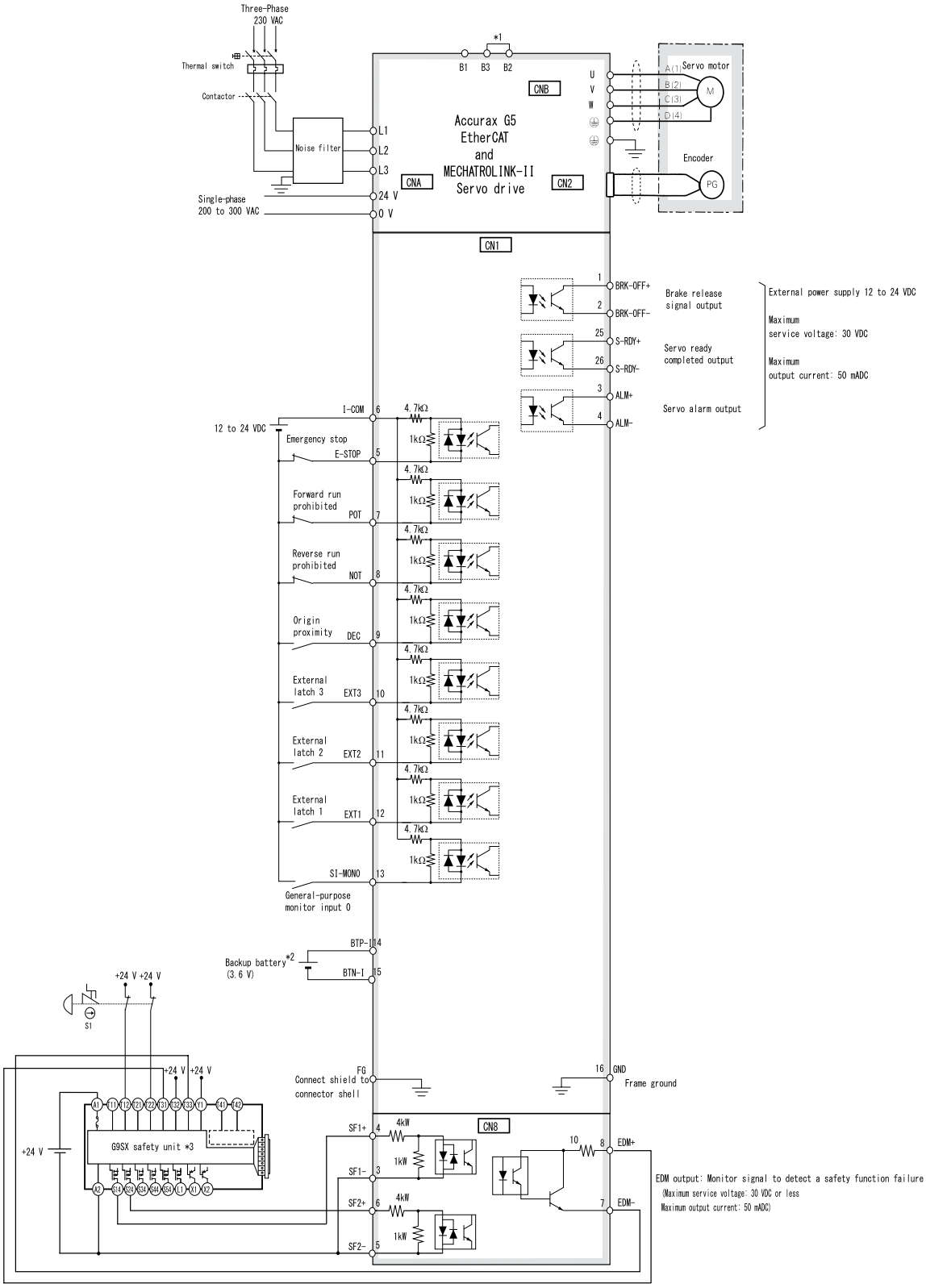

*1 For servo drives from 750 W, B2 and B3 are short-circuited. If the internal regenerative resistor is insufficient, remove the wire between B2 and B3 and connect an external regenerative resistor between B1 and B2.
*2 For use only with an absolute encoder. If a backup battery is connected to CN1 I/O connector, an encoder cable with a battery is not required.
*3 Wiring diagram example using the G9SX safety unit. If a safety unit is not used, keep the factory safety bypass connector installed in the CN8.

Note: The input function of pins 5 and 7 to 13, and output function of pins 1, 2, 25 and 26, can be changed via parameter settings.

Installation

Three-phase, 460 VAC (for EtherCAT and MECHATROLINK-II servo drives)

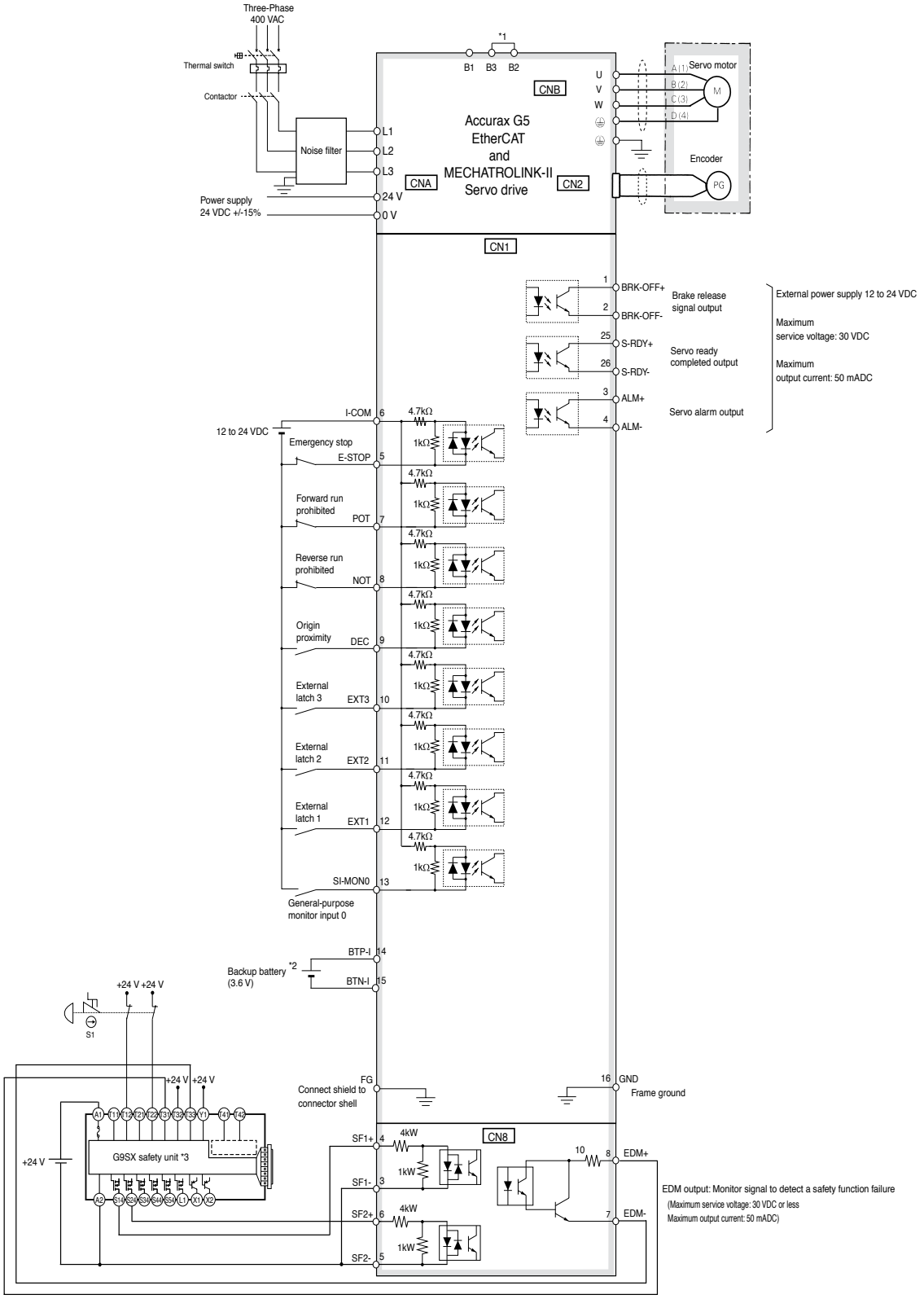

*1 For servo drives from 750 W, B2 and B3 are short-circuited. If the internal regenerative resistor is insufficient, remove the wire between B2 and B3 and connect an external regenerative resistor between B1 and B2.
*2 For use only with an absolute encoder. If a backup battery is connected to CN1 I/O connector, an encoder cable with a battery is not required.
*3 Wiring diagram example using the G9SX safety unit. If a safety unit is not used, keep the factory safety bypass connector installed in the CN8.

Note: The input function of pins 5 and 7 to 13, and output function of pins 1, 2, 25 and 26, can be changed via parameter settings.

Installation

Single-phase, 120 VAC (for Analog/Pulse servo drives)

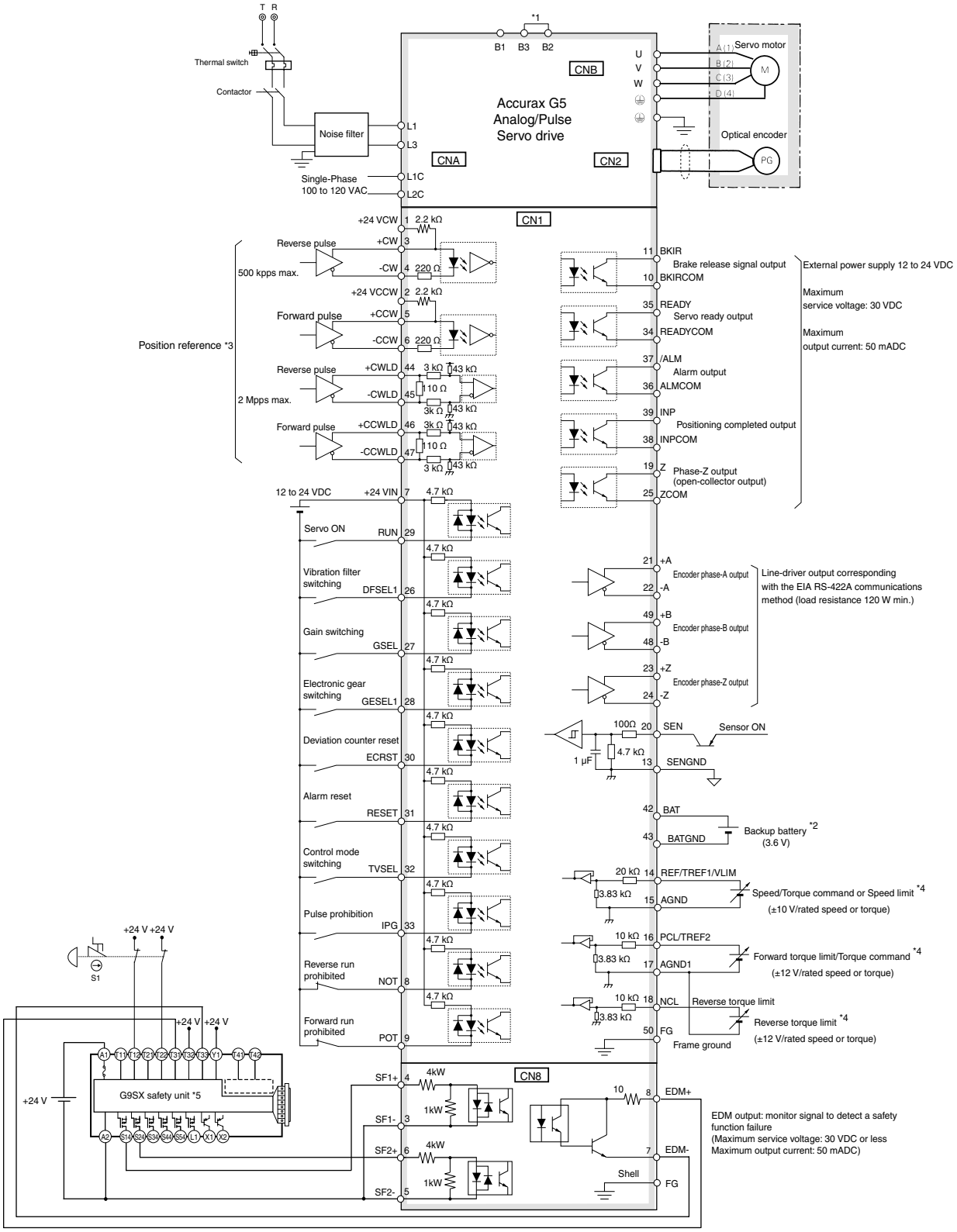

*1 For servo drives from 400 W, B2 and B3 are short-circuited. If the internal regenerative resistor is insufficient, remove the wire between B2 and B3 and connect an external regenerative resistor between B1 and B2.
*2 For use only with an absolute encoder. If a backup battery is connected to CN1 I/O connector, an encoder cable with a battery is not required.
*3 Only available in Position control mode.
*4 The input function depends on control mode used (Position, speed or torque control).
*5 Wiring diagram example using the G9SX safety unit. If a safety unit is not used, keep the factory safety bypass connector installed in the CN8.

Note: The input function of pins 8, 9 and 26 to 33, and output function of pins 10, 11, 34, 35, 38 and 39, can be changed via parameter settings.

Installation

Single-phase, 230 VAC (for Analog/Pulse servo drives)

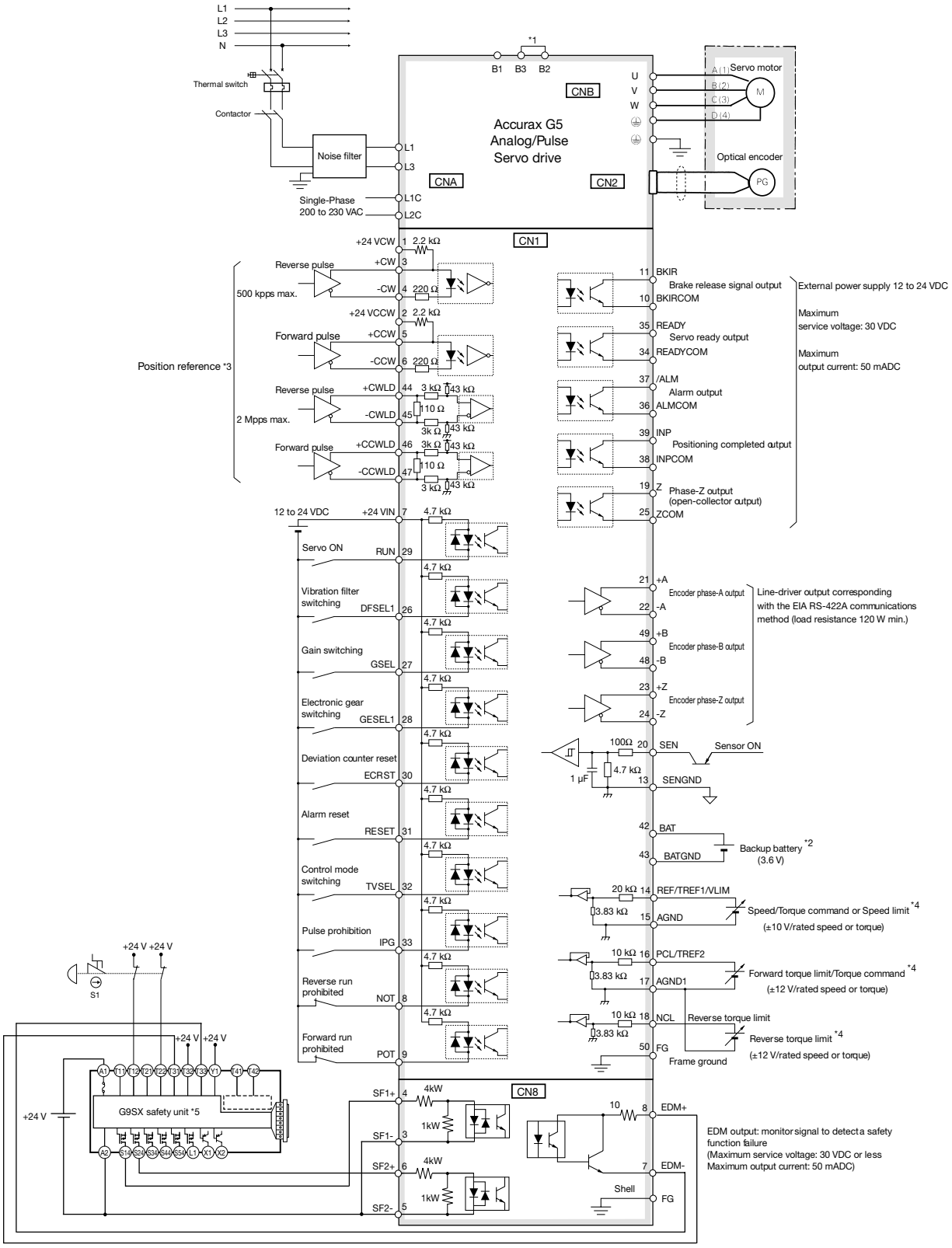

*1 For servo drives from 750 W, B2 and B3 are short-circuited. If the internal regenerative resistor is insufficient, remove the wire between B2 and B3 and connect an external regenerative resistor between B1 and B2.
*2 For use only with an absolute encoder. If a backup battery is connected to CN1 I/O connector, an encoder cable with a battery is not required.
*3 Only available in Position control mode.
*4 The input function depends on control mode used (Position, speed or torque control).
*5 Wiring diagram example using the G9SX safety unit. If a safety unit is not used, keep the factory safety bypass connector installed in the CN8.

Note: The input function of pins 8, 9 and 26 to 33, and output function of pins 10, 11, 34, 35, 38 and 39, can be changed via parameter settings.

Installation

Three-phase, 230 VAC (for Analog/Pulse servo drives)

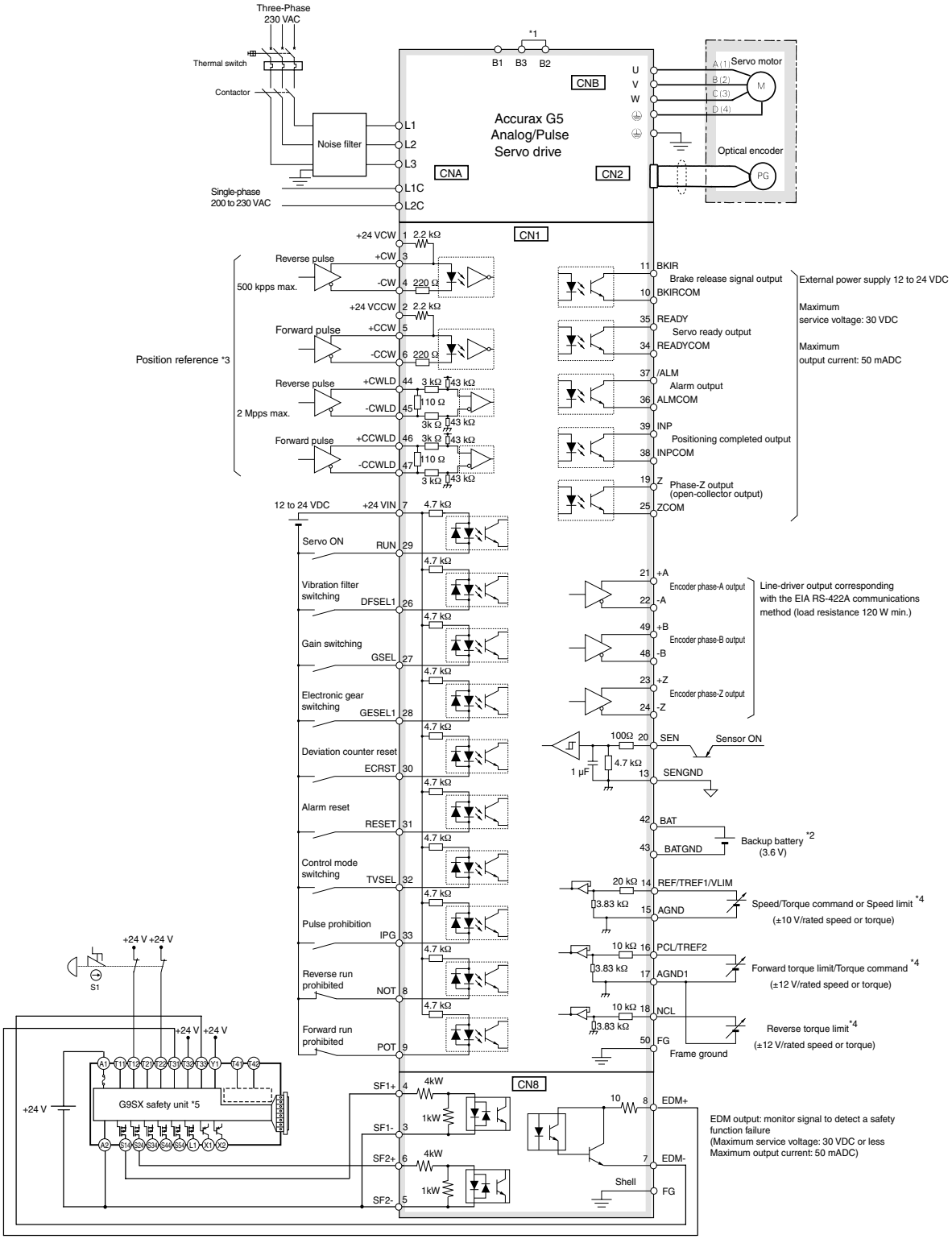

*1 For servo drives from 750 W, B2 and B3 are short-circuited. If the internal regenerative resistor is insufficient, remove the wire between B2 and B3 and connect an external regenerative resistor between B1 and B2.
*2 For use only with an absolute encoder. If a backup battery is connected to CN1 I/O connector, an encoder cable with a battery is not required.
*3 Only available in Position control mode.
*4 The input function depends on control mode used (Position, speed or torque control).
*5 Wiring diagram example using the G9SX safety unit. If a safety unit is not used, keep the factory safety bypass connector installed in the CN8.

Note: The input function of pins 8, 9 and 26 to 33, and output function of pins 10, 11, 34, 35, 38 and 39, can be changed via parameter settings.

Installation

Three-phase, 460 VAC (for Analog/Pulse servo drives)

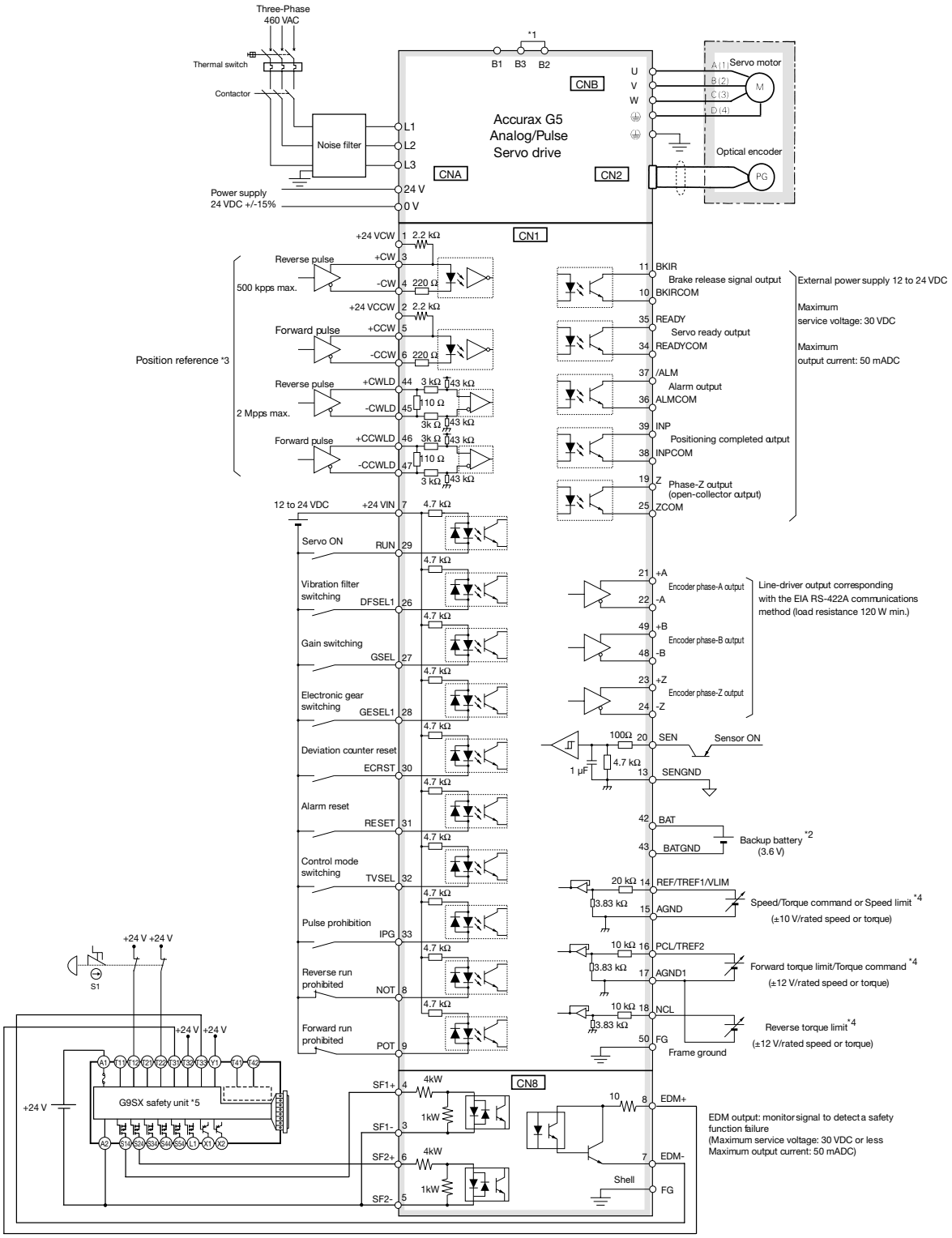

*1 Normally B2 and B3 are short-circuited. If the internal regenerative resistor is insufficient, remove the wire between B2 and B3 and connect an external regenerative resistor between B1 and B2.
*2 For use only with an absolute encoder. If a backup battery is connected to CN1 I/O connector, an encoder cable with a battery is not required.
*3 Only available in Position control mode.
*4 The input function depends on control mode used (Position, speed or torque control).
*5 Wiring diagram example using the G9SX safety unit. If a safety unit is not used, keep the factory safety bypass connector installed in the CN8.

Note: The input function of pins 8, 9 and 26 to 33, and output function of pins 10, 11, 34, 35, 38 and 39, can be changed via parameter settings.

Ordering Information

Accurax G5 Servo System configuration

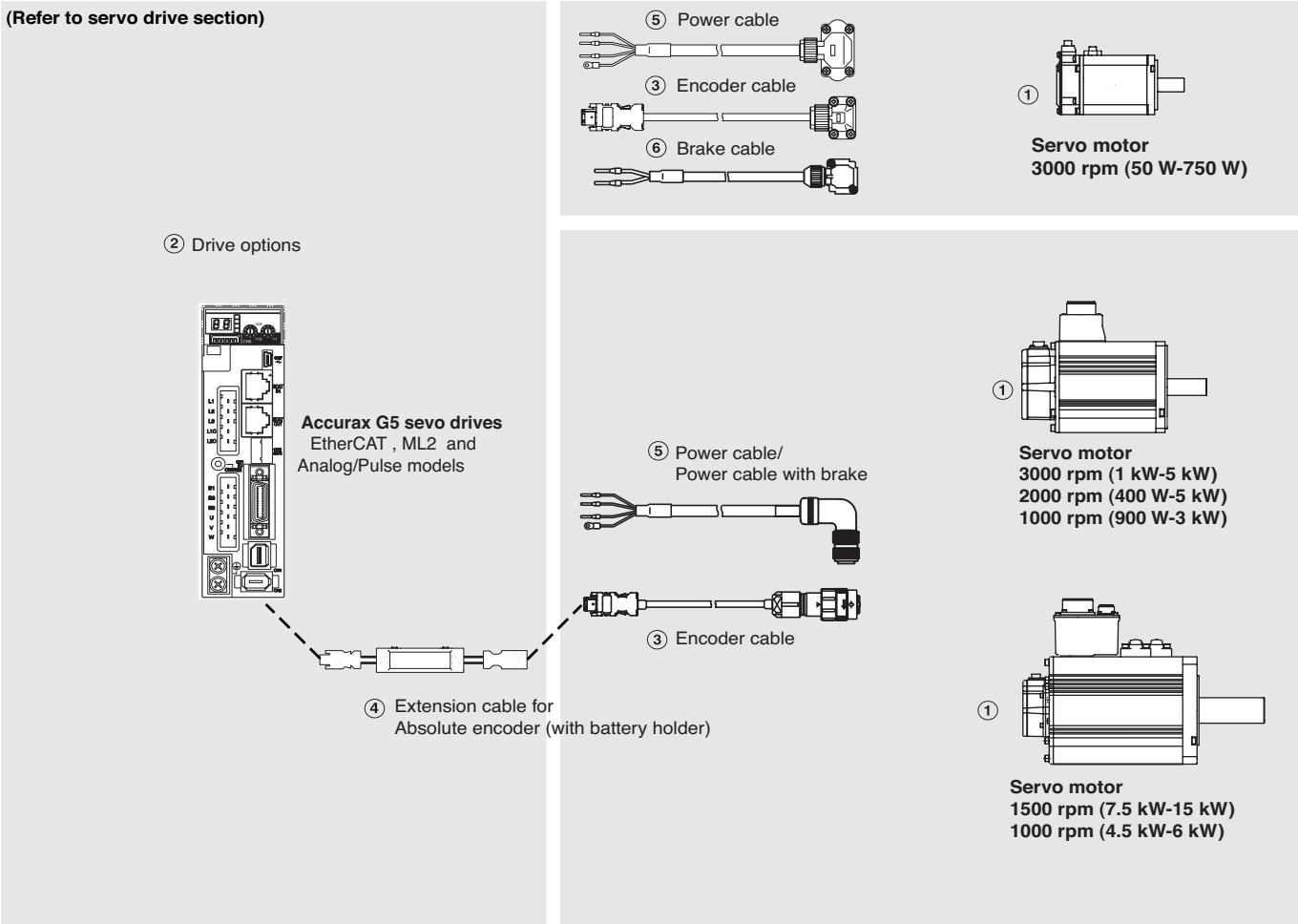

Note: The symbols ①②③... show the recommended sequence to select the servo motor and cables

Servo motor ① Select motor from R88M-K family using motor tables in next pages.

Servo drive ② Refer to Accurax G5 servo drive section for detailed drive specifications and selection of drive accessories.

Servo Motors 3000 r/min (50 W - 400 W), 120 VAC

Symbol	Specifications					Servo motor model	Compatible servo drives ②		
	Voltage	Encoder and design		Rated torque	Capacity		G5 EtherCAT	G5 MECHATROLINK-II	G5 Analog/Pulse
①	Single-phase 120 VAC	**Incremental encoder (20 bit)** Straight shaft with key and tap	Without brake	0.16 N • m	50 W	R88M-K05030H-S2	R88D-KNA5L-ECT	R88D-KNA5L-ML2	R88D-KTA5L
				0.32 N • m	100 W	R88M-K10030L-S2	R88D-KN01L-ECT	R88D-KN01L-ML2	R88D-KT01L
				0.64 N • m	200 W	R88M-K20030L-S2	R88D-KN02L-ECT	R88D-KN02L-ML2	R88D-KT02L
				1.3 N • m	400 W	R88M-K40030L-S2	R88D-KN04L-ECT	R88D-KN04L-ML2	R88D-KT04L
			With brake	0.16 N • m	50 W	R88M-K05030H-BS2	R88D-KNA5L-ECT	R88D-KNA5L-ML2	R88D-KTA5L
				0.32 N • m	100 W	R88M-K10030L-BS2	R88D-KN01L-ECT	R88D-KN01L-ML2	R88D-KT01L
				0.64 N • m	200 W	R88M-K20030L-BS2	R88D-KN02L-ECT	R88D-KN02L-ML2	R88D-KT02L
				1.3 N • m	400 W	R88M-K40030L-BS2	R88D-KN04L-ECT	R88D-KN04L-ML2	R88D-KT04L
		Absolute encoder (17 bit) Straight shaft with key and tap	Without brake	0.16 N • m	50 W	R88M-K05030T-S2	R88D-KNA5L-ECT	R88D-KNA5L-ML2	R88D-KTA5L
				0.32 N • m	100 W	R88M-K10030S-S2	R88D-KN01L-ECT	R88D-KN01L-ML2	R88D-KT01L
				0.64 N • m	200 W	R88M-K20030S-S2	R88D-KN02L-ECT	R88D-KN02L-ML2	R88D-KT02L
				1.3 N • m	400 W	R88M-K40030S-S2	R88D-KN04L-ECT	R88D-KN04L-ML2	R88D-KT04L
			With brake	0.16 N • m	50 W	R88M-K05030T-BS2	R88D-KNA5L-ECT	R88D-KNA5L-ML2	R88D-KTA5L
				0.32 N • m	100 W	R88M-K10030S-BS2	R88D-KN01L-ECT	R88D-KN01L-ML2	R88D-KT01L
				0.64 N • m	200 W	R88M-K20030S-BS2	R88D-KN02L-ECT	R88D-KN02L-ML2	R88D-KT02L
				1.3 N • m	400 W	R88M-K40030S-BS2	R88D-KN04L-ECT	R88D-KN04L-ML2	R88D-KT04L

Ordering Information

Servo Motors 3000 r/min (50 W - 5 kW), 230/460 VAC

Symbol	Specifications					Servo motor model	Compatible servo drives ②		
	Voltage	Encoder and design		Rated torque	Capacity		G5 EtherCAT	G5 MECHATROLINK-II	G5 Analog/Pulse
①	Single-phase/ Three-phase 230 VAC	**Incremental encoder (20 bit)** Straight shaft with key and tap	Without brake	0.16 N • m	50 W	R88M-K05030H-S2	R88D-KN01H-ECT	R88D-KN01H-ML2	R88D-KT01H
				0.32 N • m	100 W	R88M-K10030H-S2	R88D-KN01H-ECT	R88D-KN01H-ML2	R88D-KT01H
				0.64 N • m	200 W	R88M-K20030H-S2	R88D-KN02H-ECT	R88D-KN02H-ML2	R88D-KT02H
				1.3 N • m	400 W	R88M-K40030H-S2	R88D-KN04H-ECT	R88D-KN04H-ML2	R88D-KT04H
				2.4 N • m	750 W	R88M-K75030H-S2	R88D-KN08H-ECT	R88D-KN08H-ML2	R88D-KT08H
				3.18 N • m	1 kW	R88M-K1K030H-S2	R88D-KN10H-ECT	R88D-KN10H-ML2	R88D-KT10H
				4.77 N • m	1.5 kW	R88M-K1K530H-S2	R88D-KN15H-ECT	R88D-KN15H-ML2	R88D-KT15H
			With brake	0.16 N • m	50 W	R88M-K05030H-BS2	R88D-KN01H-ECT	R88D-KN01H-ML2	R88D-KT01H
				0.32 N • m	100 W	R88M-K10030H-BS2	R88D-KN01H-ECT	R88D-KN01H-ML2	R88D-KT01H
				0.64 N • m	200 W	R88M-K20030H-BS2	R88D-KN02H-ECT	R88D-KN02H-ML2	R88D-KT02H
				1.3 N • m	400 W	R88M-K40030H-BS2	R88D-KN04H-ECT	R88D-KN04H-ML2	R88D-KT04H
				2.4 N • m	750 W	R88M-K75030H-BS2	R88D-KN08H-ECT	R88D-KN08H-ML2	R88D-KT08H
				3.18 N • m	1 kW	R88M-K1K030H-BS2	R88D-KN10H-ECT	R88D-KN10H-ML2	R88D-KT10H
				4.77 N • m	1.5 kW	R88M-K1K530H-BS2	R88D-KN15H-ECT	R88D-KN15H-ML2	R88D-KT15H
		Absolute encoder (17 bit) Straight shaft with key and tap	Without brake	0.16 N • m	50 W	R88M-K05030T-S2	R88D-KN01H-ECT	R88D-KN01H-ML2	R88D-KT01H
				0.32 N • m	100 W	R88M-K10030T-S2	R88D-KN01H-ECT	R88D-KN01H-ML2	R88D-KT01H
				0.64 N • m	200 W	R88M-K20030T-S2	R88D-KN02H-ECT	R88D-KN02H-ML2	R88D-KT02H
				1.3 N • m	400 W	R88M-K40030T-S2	R88D-KN04H-ECT	R88D-KN04H-ML2	R88D-KT04H
				2.4 N • m	750 W	R88M-K75030T-S2	R88D-KN08H-ECT	R88D-KN08H-ML2	R88D-KT08H
				3.18 N • m	1 kW	R88M-K1K030T-S2	R88D-KN10H-ECT	R88D-KN10H-ML2	R88D-KT10H
				4.77 N • m	1.5 kW	R88M-K1K530T-S2	R88D-KN15H-ECT	R88D-KN15H-ML2	R88D-KT15H
			With brake	0.16 N • m	50 W	R88M-K05030T-BS2	R88D-KN01H-ECT	R88D-KN01H-ML2	R88D-KT01H
				0.32 N • m	100 W	R88M-K10030T-BS2	R88D-KN01H-ECT	R88D-KN01H-ML2	R88D-KT01H
				0.64 N • m	200 W	R88M-K20030T-BS2	R88D-KN02H-ECT	R88D-KN02H-ML2	R88D-KT02H
				1.3 N • m	400 W	R88M-K40030T-BS2	R88D-KN04H-ECT	R88D-KN04H-ML2	R88D-KT04H
				2.4 N • m	750 W	R88M-K75030T-BS2	R88D-KN08H-ECT	R88D-KN08H-ML2	R88D-KT08H
				3.18 N • m	1 kW	R88M-K1K030T-BS2	R88D-KN10H-ECT	R88D-KN10H-ML2	R88D-KT10H
				4.77 N • m	1.5 kW	R88M-K1K530T-BS2	R88D-KN15H-ECT	R88D-KN15H-ML2	R88D-KT15H
	Three-phase 230 VAC	**Incremental encoder (20 bit)** Straight shaft with key and tap	Without brake	6.37 N • m	2 kW	R88M-K2K030H-S2	R88D-KN20H-ECT	R88D-KN20H-ML2	R88D-KT20H
				9.55 N • m	3 kW	R88M-K3K030H-S2	R88D-KN30H-ECT	R88D-KN30H-ML2	R88D-KT30H
				15.9 N • m	5 kW	R88M-K5K030H-S2	R88D-KN50H-ECT	R88D-KN50H-ML2	R88D-KT50H
			With brake	6.37 N • m	2 kW	R88M-K2K030H-BS2	R88D-KN20H-ECT	R88D-KN20H-ML2	R88D-KT20H
				9.55 N • m	3 kW	R88M-K3K030H-BS2	R88D-KN30H-ECT	R88D-KN30H-ML2	R88D-KT30H
				15.9 N • m	5 kW	R88M-K5K030H-BS2	R88D-KN50H-ECT	R88D-KN50H-ML2	R88D-KT50H
		Absolute encoder (17 bit) Straight shaft with key and tap	Without brake	6.37 N • m	2 kW	R88M-K2K030T-S2	R88D-KN20H-ECT	R88D-KN20H-ML2	R88D-KT20H
				9.55 N • m	3 kW	R88M-K3K030T-S2	R88D-KN30H-ECT	R88D-KN30H-ML2	R88D-KT30H
				15.9 N • m	5 kW	R88M-K5K030T-S2	R88D-KN50H-ECT	R88D-KN50H-ML2	R88D-KT50H
			With brake	6.37 N • m	2 kW	R88M-K2K030T-BS2	R88D-KN20H-ECT	R88D-KN20H-ML2	R88D-KT20H
				9.55 N • m	3 kW	R88M-K3K030T-BS2	R88D-KN30H-ECT	R88D-KN30H-ML2	R88D-KT30H
				15.9 N • m	5 kW	R88M-K5K030T-BS2	R88D-KN50H-ECT	R88D-KN50H-ML2	R88D-KT50H
	Three-phase 460 VAC	**Incremental encoder (20 bit)** Straight shaft with key and tap	Without brake	2.4 N • m	750 W	R88M-K75030F-S2	R88D-KN10F-ECT	R88D-KN10F-ML2	R88D-KT10F
				3.18 N • m	1 kW	R88M-K1K030F-S2	R88D-KN10F-ECT	R88D-KN10F-ML2	R88D-KT10F
				4.77 N • m	1.5 kW	R88M-K1K530F-S2	R88D-KN15F-ECT	R88D-KN15F-ML2	R88D-KT15F
				6.37 N • m	2 kW	R88M-K2K030F-S2	R88D-KN20F-ECT	R88D-KN20F-ML2	R88D-KT20F
				9.55 N • m	3 kW	R88M-K3K030F-S2	R88D-KN30F-ECT	R88D-KN30F-ML2	R88D-KT30F
				12.7 N • m	4 kW	R88M-K4K030F-S2	R88D-KN50F-ECT	R88D-KN50F-ML2	R88D-KT50F
				15.9 N • m	5 kW	R88M-K5K030F-S2	R88D-KN50F-ECT	R88D-KN50F-ML2	R88D-KT50F
			With brake	2.4 N • m	750 W	R88M-K75030F-BS2	R88D-KN10F-ECT	R88D-KN10F-ML2	R88D-KT10F
				3.18 N • m	1 kW	R88M-K1K030F-BS2	R88D-KN10F-ECT	R88D-KN10F-ML2	R88D-KT10F
				4.77 N • m	1.5 kW	R88M-K1K530F-BS2	R88D-KN15F-ECT	R88D-KN15F-ML2	R88D-KT15F
				6.37 N • m	2 kW	R88M-K2K030F-BS2	R88D-KN20F-ECT	R88D-KN20F-ML2	R88D-KT20F
				9.55 N • m	3 kW	R88M-K3K030F-BS2	R88D-KN30F-ECT	R88D-KN30F-ML2	R88D-KT30F
				12.7 N • m	4 kW	R88M-K4K030F-BS2	R88D-KN50F-ECT	R88D-KN50F-ML2	R88D-KT50F
				15.9 N • m	5 kW	R88M-K5K030F-BS2	R88D-KN50F-ECT	R88D-KN50F-ML2	R88D-KT50F
		Absolute encoder (17 bit) Straight shaft with key and tap	Without brake	2.4 N • m	750 W	R88M-K75030C-S2	R88D-KN10F-ECT	R88D-KN10F-ML2	R88D-KT10F
				3.18 N • m	1 kW	R88M-K1K030C-S2	R88D-KN10F-ECT	R88D-KN10F-ML2	R88D-KT10F
				4.77 N • m	1.5 kW	R88M-K1K530C-S2	R88D-KN15F-ECT	R88D-KN15F-ML2	R88D-KT15F
				6.37 N • m	2 kW	R88M-K2K030C-S2	R88D-KN20F-ECT	R88D-KN20F-ML2	R88D-KT20F
				9.55 N • m	3 kW	R88M-K3K030C-S2	R88D-KN30F-ECT	R88D-KN30F-ML2	R88D-KT30F
				12.7 N • m	4 kW	R88M-K4K030C-S2	R88D-KN50F-ECT	R88D-KN50F-ML2	R88D-KT50F
			With brake	15.9 N • m	5 kW	R88M-K5K030C-S2	R88D-KN50F-ECT	R88D-KN50F-ML2	R88D-KT50F
				2.4 N • m	750 W	R88M-K75030C-BS2	R88D-KN10F-ECT	R88D-KN10F-ML2	R88D-KT10F
				3.18 N • m	1 kW	R88M-K1K030C-BS2	R88D-KN10F-ECT	R88D-KN10F-ML2	R88D-KT10F
				4.77 N • m	1.5 kW	R88M-K1K530C-BS2	R88D-KN15F-ECT	R88D-KN15F-ML2	R88D-KT15F
				6.37 N • m	2 kW	R88M-K2K030C-BS2	R88D-KN20F-ECT	R88D-KN20F-ML2	R88D-KT20F
				9.55 N • m	3 kW	R88M-K3K030C-BS2	R88D-KN30F-ECT	R88D-KN30F-ML2	R88D-KT30F
				12.7 N • m	4 kW	R88M-K4K030C-BS2	R88D-KN50F-ECT	R88D-KN50F-ML2	R88D-KT50F
				15.9 N • m	5 kW	R88M-K5K030C-BS2	R88D-KN50F-ECT	R88D-KN50F-ML2	R88D-KT50F

Ordering Information

Servo Motors 2000 r/min (400 W - 5 kW), 230/460 VAC

Symbol	Specifications					Servo motor model	Compatible servo drives ②		
	Voltage	Encoder and design		Rated torque	Capacity		G5 EtherCAT	G5 MECHATROLINK-II	G5 Analog/Pulse
①	Single-phase/Three-phase 230 VAC	**Incremental encoder (20 bit)** Straight shaft with key and tap	Without brake	4.77 N • m	1 kW	R88M-K1K020H-S2	R88D-KN10H-ECT	R88D-KN10H-ML2	R88D-KT10H
				7.16 N • m	1.5 kW	R88M-K1K520H-S2	R88D-KN15H-ECT	R88D-KN15H-ML2	R88D-KT15H
	Three-phase 230 VAC			9.55 N • m	2 kW	R88M-K2K020H-S2	R88D-KN20H-ECT	R88D-KN20H-ML2	R88D-KT20H
				14.3 N • m	3 KW	R88M-K3K020H-S2	R88D-KN30H-ECT	R88D-KN30H-ML2	R88D-KT30H
				19.1 N • m	4 kW	R88M-K4K020H-S2	R88D-KN50H-ECT	R88D-KN50H-ML2	R88D-KT50H
				23.9 N • m	5 kW	R88M-K5K020H-S2	R88D-KN50H-ECT	R88D-KN50H-ML2	R88D-KT50H
	Single-phase/Three-phase 230 VAC		With brake	4.77 N • m	1 kW	R88M-K1K020H-BS2	R88D-KN10H-ECT	R88D-KN10H-ML2	R88D-KT10H
				7.16 N • m	1.5 kW	R88M-K1K520H-BS2	R88D-KN15H-ECT	R88D-KN15H-ML2	R88D-KT15H
	Three-phase 230 VAC			9.55 N • m	2 kW	R88M-K2K020H-BS2	R88D-KN20H-ECT	R88D-KN20H-ML2	R88D-KT20H
				14.3 N • m	3 KW	R88M-K3K020H-BS2	R88D-KN30H-ECT	R88D-KN30H-ML2	R88D-KT30H
				19.1 N • m	4 kW	R88M-K4K020H-BS2	R88D-KN50H-ECT	R88D-KN50H-ML2	R88D-KT50H
				23.9 N • m	5 kW	R88M-K5K020H-BS2	R88D-KN50H-ECT	R88D-KN50H-ML2	R88D-KT50H
	Single-phase/Three-phase 230 VAC	**Absolute encoder (17 bit)** Straight shaft with key and tap	Without brake	4.77 N • m	1 kW	R88M-K1K020T-S2	R88D-KN10H-ECT	R88D-KN10H-ML2	R88D-KT10H
				7.16 N • m	1.5 kW	R88M-K1K520T-S2	R88D-KN15H-ECT	R88D-KN15H-ML2	R88D-KT15H
	Three-phase 230 VAC			9.55 N • m	2 kW	R88M-K2K020T-S2	R88D-KN20H-ECT	R88D-KN20H-ML2	R88D-KT20H
				14.3 N • m	3 KW	R88M-K3K020T-S2	R88D-KN30H-ECT	R88D-KN30H-ML2	R88D-KT30H
				19.1 N • m	4 kW	R88M-K4K020T-S2	R88D-KN50H-ECT	R88D-KN50H-ML2	R88D-KT50H
				23.9 N • m	5 kW	R88M-K5K020T-S2	R88D-KN50H-ECT	R88D-KN50H-ML2	R88D-KT50H
	Single-phase/Three-phase 230 VAC		With brake	4.77 N • m	1 kW	R88M-K1K020T-BS2	R88D-KN10H-ECT	R88D-KN10H-ML2	R88D-KT10H
				7.16 N • m	1.5 kW	R88M-K1K520T-BS2	R88D-KN15H-ECT	R88D-KN15H-ML2	R88D-KT15H
	Three-phase 230 VAC			9.55 N • m	2 kW	R88M-K2K020T-BS2	R88D-KN20H-ECT	R88D-KN20H-ML2	R88D-KT20H
				14.3 N • m	3 KW	R88M-K3K020T-BS2	R88D-KN30H-ECT	R88D-KN30H-ML2	R88D-KT30H
				19.1 N • m	4 kW	R88M-K4K020T-BS2	R88D-KN50H-ECT	R88D-KN50H-ML2	R88D-KT50H
				23.9 N • m	5 kW	R88M-K5K020T-BS2	R88D-KN50H-ECT	R88D-KN50H-ML2	R88D-KT50H
	Three-phase 460 VAC	**Incremental encoder (20 bit)** Straight shaft with key and tap	Without brake	1.91 N • m	400 W	R88M-K40020F-S2	R88D-KN06F-ECT	R88D-KN06F-ML2	R88D-KT06F
				2.86 N • m	600 W	R88M-K60020F-S2	R88D-KN06F-ECT	R88D-KN06F-ML2	R88D-KT06F
				4.77 N • m	1 kW	R88M-K1K020F-S2	R88D-KN10F-ECT	R88D-KN10F-ML2	R88D-KT10F
				7.16 N • m	1.5 kW	R88M-K1K520F-S2	R88D-KN15F-ECT	R88D-KN15F-ML2	R88D-KT15F
				9.55 N • m	2 kW	R88M-K2K020F-S2	R88D-KN20F-ECT	R88D-KN20F-ML2	R88D-KT20F
				14.3 N • m	3 kW	R88M-K3K020F-S2	R88D-KN30F-ECT	R88D-KN30F-ML2	R88D-KT30F
				19.1 N • m	4 kW	R88M-K4K020F-S2	R88D-KN50F-ECT	R88D-KN50F-ML2	R88D-KT50F
				23.9 N • m	5 kW	R88M-K5K020F-S2	R88D-KN50F-ECT	R88D-KN50F-ML2	R88D-KT50F
			With brake	1.91 N • m	400 W	R88M-K40020F-BS2	R88D-KN06F-ECT	R88D-KN06F-ML2	R88D-KT06F
				2.86 N • m	600 W	R88M-K60020F-BS2	R88D-KN06F-ECT	R88D-KN06F-ML2	R88D-KT06F
				4.77 N • m	1 kW	R88M-K1K020F-BS2	R88D-KN10F-ECT	R88D-KN10F-ML2	R88D-KT10F
				7.16 N • m	1.5 kW	R88M-K1K520F-BS2	R88D-KN15F-ECT	R88D-KN15F-ML2	R88D-KT15F
				9.55 N • m	2 kW	R88M-K2K020F-BS2	R88D-KN20F-ECT	R88D-KN20F-ML2	R88D-KT20F
				14.3 N • m	3 kW	R88M-K3K020F-BS2	R88D-KN30F-ECT	R88D-KN30F-ML2	R88D-KT30F
				19.1 N • m	4 kW	R88M-K4K020F-BS2	R88D-KN50F-ECT	R88D-KN50F-ML2	R88D-KT50F
				23.9 N • m	5 kW	R88M-K5K020F-BS2	R88D-KN50F-ECT	R88D-KN50F-ML2	R88D-KT50F
		Absolute encoder (17 bit) Straight shaft with key and tap	Without brake	1.91 N • m	400 W	R88M-K40020C-S2	R88D-KN06F-ECT	R88D-KN06F-ML2	R88D-KT06F
				2.86 N • m	600 W	R88M-K60020C-S2	R88D-KN06F-ECT	R88D-KN06F-ML2	R88D-KT06F
				4.77 N • m	1 kW	R88M-K1K020C-S2	R88D-KN10F-ECT	R88D-KN10F-ML2	R88D-KT10F
				7.16 N • m	1.5 kW	R88M-K1K520C-S2	R88D-KN15F-ECT	R88D-KN15F-ML2	R88D-KT15F
				9.55 N • m	2 kW	R88M-K2K020C-S2	R88D-KN20F-ECT	R88D-KN20F-ML2	R88D-KT20F
				14.3 N • m	3 kW	R88M-K3K020C-S2	R88D-KN30F-ECT	R88D-KN30F-ML2	R88D-KT30F
				19.1 N • m	4 kW	R88M-K4K020C-S2	R88D-KN50F-ECT	R88D-KN50F-ML2	R88D-KT50F
				23.9 N • m	5 kW	R88M-K5K020C-S2	R88D-KN50F-ECT	R88D-KN50F-ML2	R88D-KT50F
			With brake	1.91 N • m	400 W	R88M-K40020C-BS2	R88D-KN06F-ECT	R88D-KN06F-ML2	R88D-KT06F
				2.86 N • m	600 W	R88M-K60020C-BS2	R88D-KN06F-ECT	R88D-KN06F-ML2	R88D-KT06F
				4.77 N • m	1 kW	R88M-K1K020C-BS2	R88D-KN10F-ECT	R88D-KN10F-ML2	R88D-KT10F
				7.16 N • m	1.5 kW	R88M-K1K520C-BS2	R88D-KN15F-ECT	R88D-KN15F-ML2	R88D-KT15F
				9.55 N • m	2 kW	R88M-K2K020C-BS2	R88D-KN20F-ECT	R88D-KN20F-ML2	R88D-KT20F
				14.3 N • m	3 kW	R88M-K3K020C-BS2	R88D-KN30F-ECT	R88D-KN30F-ML2	R88D-KT30F
				19.1 N • m	4 kW	R88M-K4K020C-BS2	R88D-KN50F-ECT	R88D-KN50F-ML2	R88D-KT50F
				23.9 N • m	5 kW	R88M-K5K020C-BS2	R88D-KN50F-ECT	R88D-KN50F-ML2	R88D-KT50F

Ordering Information

Servo Motors 1500 r/min (7.5 - 15 kW)

Symbol	Specifications					Servo motor model	Compatible servo drives ②	
	Voltage	Encoder and design		Rated torque	Capacity		G5 EtherCAT	G5 Analog/Pulse
①	Three-phase 230 VAC	**Absolute encoder (17 bit)** Straight shaft with key and tap	Without brake	47.8 N·m	7500 W	R88M-K7K515T-S2	R88D-KN75H-ECT	R88D-KT75H
			With brake	47.8 N·m	7500 W	R88M-K7K515T-BS2	R88D-KN75H-ECT	R88D-KT75H
	Three-phase 460 VAC		Without brake	47.8 N·m	7500 W	R88M-K7K515C-S2	R88D-KN75F-ECT	R88D-KT75F
				70.0 N·m	11000 W	R88M-K11K015C-S2	R88D-KN150F-ECT	R88D-KT150F
				95.5 N·m	15000 W	R88M-K15K015C-S2	R88D-KN150F-ECT	R88D-KT150F
			With brake	47.8 N·m	7500 W	R88M-K7K515C-BS2	R88D-KN75F-ECT	R88D-KT75F
				70.0 N·m	11000 W	R88M-K11K015C-BS2	R88D-KN150F-ECT	R88D-KT150F
				95.5 N·m	15000 W	R88M-K15K015C-BS2	R88D-KN150F-ECT	R88D-KT150F

Servo Motors 1000 r/min (900 W - 6 kW)

Symbol	Specifications					Servo motor model	Compatible servo drives ②		
	Voltage	Encoder and design		Rated torque	Capacity		G5 EtherCAT	G5 Analog/Pulse	G5 ML2
①	Single-phase/ Three-phase 230 VAC	**Incremental encoder (20 bit)** Straight shaft with key and tap	Without brake	8.59 N • m	900 W	R88M-K90010H-S2	R88D-KN15H-ECT	R88D-KT15H	R88D-KN15H-ML2
				19.1 N • m	2000 W	R88M-K2K010H-S2	R88D-KN30H-ECT	R88D-KT30H	R88D-KN30H-ML2
				28.7 N • m	3000 W	R88M-K3K010H-S2	R88D-KN50H-ECT	R88D-KT50H	R88D-KN50H-ML2
			With brake	8.59 N • m	900 W	R88M-K90010H-BS2	R88D-KN15H-ECT	R88D-KT15H	R88D-KN15H-ML2
				19.1 N • m	2000 W	R88M-K2K010H-BS2	R88D-KN30H-ECT	R88D-KT30H	R88D-KN30H-ML2
				28.7 N • m	3000 W	R88M-K3K010H-BS2	R88D-KN50H-ECT	R88D-KT50H	R88D-KN50H-ML2
		Absolute encoder (17 bit) Straight shaft with key and tap	Without brake	8.59 N • m	900 W	R88M-K90010T-S2	R88D-KN15H-ECT	R88D-KT15H	R88D-KN15H-ML2
				19.1 N • m	2000 W	R88M-K2K010T-S2	R88D-KN30H-ECT	R88D-KT30H	R88D-KN30H-ML2
				28.7 N • m	3000 W	R88M-K3K010T-S2	R88D-KN50H-ECT	R88D-KT50H	R88D-KN50H-ML2
			With brake	8.59 N • m	900 W	R88M-K90010T-BS2	R88D-KN15H-ECT	R88D-KT15H	R88D-KN15H-ML2
				19.1 N • m	2000 W	R88M-K2K010T-BS2	R88D-KN30H-ECT	R88D-KT30H	R88D-KN30H-ML2
				28.7 N • m	3000 W	R88M-K3K010T-BS2	R88D-KN50H-ECT	R88D-KT50H	R88D-KN50H-ML2
	Three-phase 460 VAC	**Incremental encoder (20 bit)** Straight shaft with key and tap	Without brake	8.59 N • m	900 W	R88M-K90010F-S2	R88D-KN15F-ECT	R88D-KT15F	R88D-KN15F-ML2
				19.1 N • m	2000 W	R88M-K2K010F-S2	R88D-KN30F-ECT	R88D-KT30F	R88D-KN30F-ML2
				28.7 N • m	3000 W	R88M-K3K010F-S2	R88D-KN50F-ECT	R88D-KT50F	R88D-KN50F-ML2
			With brake	8.59 N • m	900 W	R88M-K90010F-BS2	R88D-KN15F-ECT	R88D-KT15F	R88D-KN15F-ML2
				19.1 N • m	2000 W	R88M-K2K010F-BS2	R88D-KN30F-ECT	R88D-KT30F	R88D-KN30F-ML2
				28.7 N • m	3000 W	R88M-K3K010F-BS2	R88D-KN50F-ECT	R88D-KT50F	R88D-KN50F-ML2
		Absolute encoder (17 bit) Straight shaft with key and tap	Without brake	8.59 N • m	900 W	R88M-K90010C-S2	R88D-KN15F-ECT	R88D-KT15F	R88D-KN15F-ML2
				19.1 N • m	2000 W	R88M-K2K010C-S2	R88D-KN30F-ECT	R88D-KT30F	R88D-KN30F-ML2
				28.7 N • m	3000 W	R88M-K3K010C-S2	R88D-KN50F-ECT	R88D-KT50F	R88D-KN50F-ML2
				43.0 N • m	4500 W	R88M-K4K510C-S2	R88D-KN50F-ECT	R88D-KT50F	–
				57.3 N • m	6000 W	R88M-K6K010C-S2	R88D-KN75F-ECT	R88D-KT75F	–
			With brake	8.59 N • m	900 W	R88M-K90010C-BS2	R88D-KN15F-ECT	R88D-KT15F	R88D-KN15F-ML2
				19.1 N • m	2000 W	R88M-K2K010C-S2	R88D-KN30F-ECT	R88D-KT30F	R88D-KN30F-ML2
				28.7 N • m	3000 W	R88M-K3K010C-S2	R88D-KN50F-ECT	R88D-KT50F	R88D-KN50F-ML2
				43.0 N • m	4500 W	R88M-K4K510C-BS2	R88D-KN50F-ECT	R88D-KT50F	–
				57.3 N • m	6000 W	R88M-K6K010C-BS2	R88D-KN75F-ECT	R88D-KT75F	–

Ordering Information

Accurax G5 series EtherCAT reference configuration

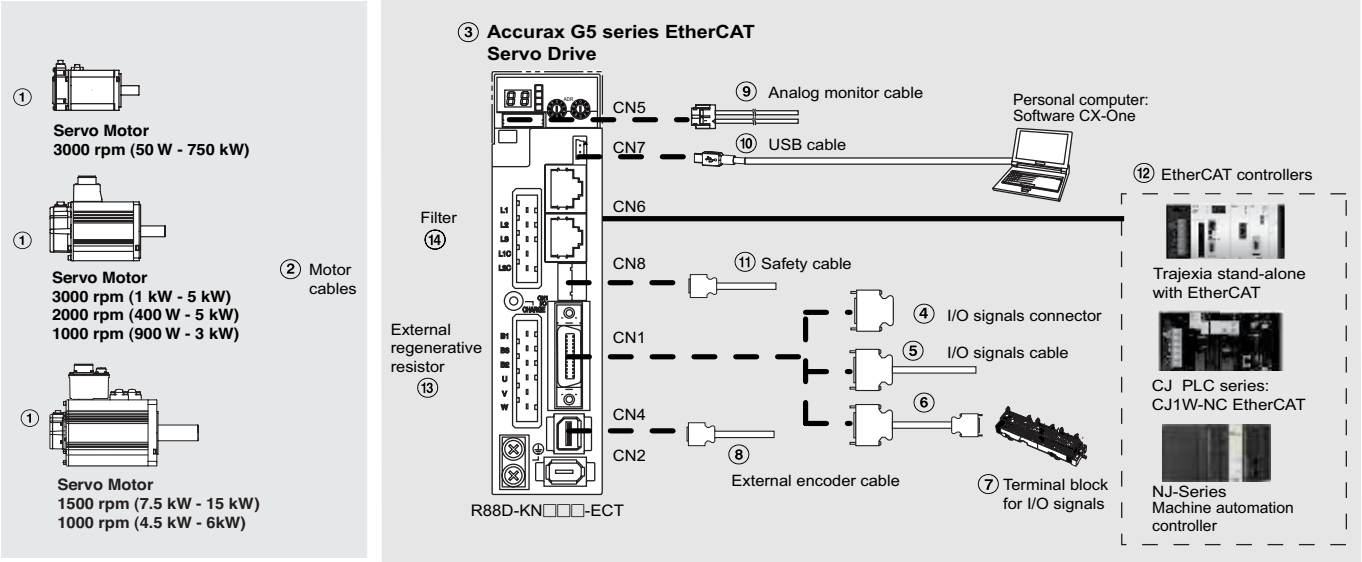

Note: The symbols ①②③... show the recommended sequence to select the Accurax G5 servo system

Servo motors power & encoder cables

Note: ①② Refer to the Accurax G5 servo motor section for servomotor, motor cables or connectors selection.

Servo drives

Symbol	Specifications		Servo drive model	Servo motor model ①
	Voltage	Capacity		
③	Single-phase, 120 VAC	50 W	R88D-KNA5L-ECT	R88M-K05030(H/T)-□
		100 W	R88D-KN01L-ECT	R88M-K10030(L/S)-□
		200 W	R88D-KN02L-ECT	R88M-K20030(L/S)-□
		400 W	R88D-KN04L-ECT	R88M-K40030(L/S)-□
	Single-phase, 230 VAC	100 W	R88D-KN01H-ECT	R88M-K05030(H/T)-□
				R88M-K10030(H/T)-□
		200 W	R88D-KN02H-ECT	R88M-K20030(H/T)-□
		400 W	R88D-KN04H-ECT	R88M-K40030(H/T)-□
		750 W	R88D-KN08H-ECT	R88M-K75030(H/T)-□
		1.0 kW	R88D-KN10H-ECT	R88M-K1K020(H/T)-□
		1.5 kW	R88D-KN15H-ECT	R88M-K1K030(H/T)-□
				R88M-K1K530(H/T)-□
				R88M-K1K520(H/T)-□
				R88M-K90010(H/T)-□
	Three-phase, 230 VAC	2.0 kW	R88D-KN20H-ECT	R88M-K2K030(H/T)-□
				R88M-K2K020(H/T)-□
		3.0 kW	R88D-KN30H-ECT	R88M-K3K030(H/T)-□
				R88M-K3K020(H/T)-□
				R88M-K2K010(H/T)-□
		5.0 kW	R88D-KN50H-ECT	R88M-K3K010(H/T)-□
				R88M-K4K030(H/T)-□
				R88M-K4K020(H/T)-□
				R88M-K5K030(H/T)-□
				R88M-K5K020(H/T)-□
		7.5 kW	R88D-KN75H-ECT	R88M-K7K515T-□
	Three-phase, 460 VAC	600 W	R88D-KN06F-ECT	R88M-K40020(F/C)-□
				R88M-K60020(F/C)-□
		1.0 kW	R88D-KN10F-ECT	R88M-K75030(F/C)-□
				R88M-K1K020(F/C)-□
		1.5 kW	R88D-KN15F-ECT	R88M-K1K030(F/C)-□
				R88M-K1K530(F/C)-□
				R88M-K1K520(F/C)-□
				R88M-K90010(F/C)-□
		2.0 kW	R88D-KN20F-ECT	R88M-K2K030(F/C)-□
				R88M-K2K020(F/C)-□
		3.0 kW	R88D-KN30F-ECT	R88M-K3K030(F/C)-□
				R88M-K3K020(F/C)-□
				R88M-K2K010(F/C)-□

Ordering Information

Symbol	Specifications		Servo drive model	① Compatible G5 series rotary servo motors
③	Three-phase, 460 VAC	5.0 kW	R88D-KN50F-ECT	R88M-K4K030(F/C)-□
				R88M-K5K030(F/C)-□
				R88M-K4K020(F/C)-□
				R88M-K5K020(F/C)-□
				R88M-K4K510C-□
				R88M-K3K010(F/C)-□
		7.5 kW	R88D-KN75F-ECT	R88M-K6K010C-□
				R88M-K7K515C-□
		15 kW	R88D-KN150F-ECT	R88M-K11K015C-□
				R88M-K15K015C-□

Signals cables for I/O general purpose (CN1)

Symbol	Description	Connect to		Model
④	I/O connector kit (26 pins)	For I/O general purpose	–	R88A-CNW01C
⑤	I/O signals cable	For I/O general purpose	1 m	R88A-CPKB001S-E
			2 m	R88A-CPKB002S-E
⑥	Terminal block cable	For I/O general purpose	1 m	XW2Z-100J-B34
			2 m	XW2Z-200J-B34
⑦	Terminal block (M3 screw and for pin terminals)		–	XW2B-20G4
	Terminal block (M3.5 screw and for fork/round terminals)		–	XW2B-20G5
	Terminal block (M3 screw and for fork/round terminals)		–	XW2D-20G6

External encoder cable (CN4)

Symbol	Name		Model
⑧	External encoder cable	5 m	R88A-CRKM005SR-E
		10 m	R88A-CRKM010SR-E
		20 m	R88A-CRKM020SR-E

Analog monitor (CN5)

Symbol	Name		Model
⑨	Analog monitor cable	1 m	R88A-CMK001S

USB personal computer cable (CN7)

Symbol	Name		Model
⑩	USB mini-connector cable	2 m	AX-CUSBM002-E

Cable for safety (CN8)

Symbol	Name		Model
⑪	Safety cable	3 m	R88A-CSK003S-E

EtherCAT controllers

Symbol	Name		Model
⑫	NJ Series Machine Automation Controller		NJ301-1100 (4 axes)
			NJ301-1200 (8 axes)
			NJ501-1300 (16 axes)
			NJ501-1400 (32 axes)
			NJ501-1500 (64 axes)
	Trajexia stand-alone	Motion control unit	TJ2-MC64 (64 axes)
		EtherCAT master unit	TJ2-ECT64 (64 axes)
			TJ2-ECT16(16 axes)
			TJ2-ECT04 (4 axes)
	Position Controller Unit for CJ1 PLC series		CJ1W-NCF8□ (16 axes)
			CJ1W-NC88□ (8 axes)
			CJ1W-NC48□ (4 axes)
			CJ1W-NC281 (2 axes)

External regenerative resistor

Symbol	Regenerative resistor unit model	Model
⑬	R88A-RR08050S	50 Ω, 80 W
	R88A-RR080100S	100 Ω, 80 W
	R88A-RR22047S1	47 Ω, 220 W
	R88A-RR50020S	20 Ω, 500 W

Filters

Symbol	Specifications	Power	Drive Model	Filter Model	Rated Current (A)	Leakage Current (mA) Nom/Max
⑭	Single-phase, 120 VAC	50 W	R88D-KTA5L-ECT	R88A-FIK102-RE	2.4	3.5
		100 W	R88D-KT01L-ECT	R88A-FIK102-RE	2.4	3.5
		200 W	R88D-KT02L-ECT	R88A-FIK104-RE	4.1	3.5
		400 W	R88D-KT04L-ECT	R88A-FIK107-RE	6.6	3.5
	Single-phase, 230 VAC	100 W	R88D-KT01H-ECT	R88A-FIK102-RE	2.4	3.5
		200 W	R88D-KT02H-ECT	R88A-FIK102-RE	2.4	3.5
		400 W	R88D-KT04H-ECT	R88A-FIK104-RE	4.1	3.5
		750 W	R88D-KT08H-ECT	R88A-FIK107-RE	6.6	3.5
		1.0 kW	R88D-KT10H-ECT	R88A-FIK114-RE	14.2	3.5
		1.5 kW	R88D-KT15H-ECT	R88A-FIK114-RE	14.2	3.5
	Three-phase, 230 VAC	2.0 kW	R88D-KT20H-ECT	R88A-FIK212-RE	12	0.5/25[1]
		3.0 kW	R88D-KT30H-ECT	R88A-FIK222-RE	22	0.5/25[1]
		5.0 kW	R88D-KT50H-ECT	R88A-FIK222-RE	22	0.5/25[1]
		7.5 kW	R88D-KT75H-ECT	–	–	–
	Three-phase, 460 VAC	600 W	R88D-KT06F-ECT	R88A-FIK304-RE	4	0.3/32[1]
		1.0 kW	R88D-KT10F-ECT	R88A-FIK304-RE	4	0.3/32[1]
		1.5 kW	R88D-KT15F-ECT	R88A-FIK304-RE	4	0.3/32[1]
		2.0 kW	R88D-KT20F-ECT	R88A-FIK306-RE	6	0.3/32[1]
		3.0 kW	R88D-KT30F-ECT	R88A-FIK312-RE	12.1	0.3/32[1]
		5.0 kW	R88D-KT50F-ECT	R88A-FIK312-RE	12.1	0.3/32[1]
		7.5 kW	R88D-KT75F-ECT	R88A-FIK330-RE	22	0.3/40[1]
		15 kW	R88D-KT150F-ECT	R88A-FIK350-RE	44	2.0/130[1]

1. Momentary peak leakage current for the filter at switch-on/off.

Connectors

Specifications	Model
External encoder connector (for CN4)	R88A-CNK41L
Safety I/O signal connector (for CN8)	R88A-CNK81S

Computer software

Specifications	Model
Configuration and monitoring software tool for servo drives and inverters (CX-drive version 2.10 or higher)	CX-Drive

Ordering Information

Accurax G5 series MECHATROLINK-II Reference configuration

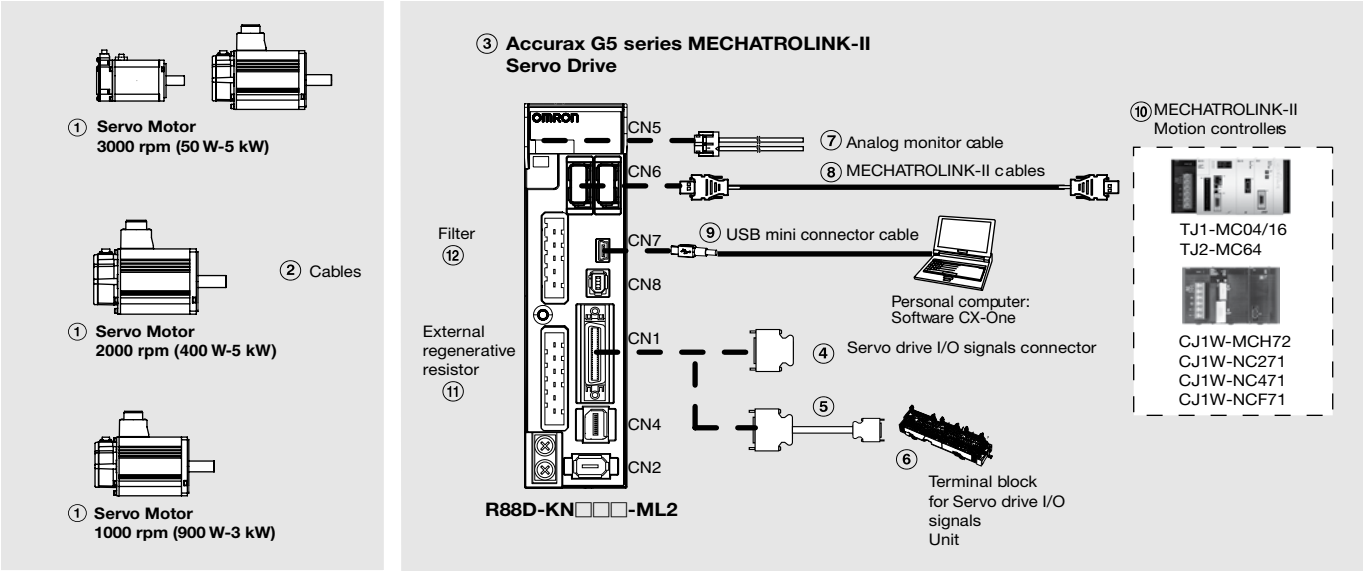

Note: The symbols ①②③④⑤... show the recommended sequence to select the components in Accurax G5 servo system

Servo motors, power & encoder cables

Note: ①② Refer to the Accurax G5 servo motor section for servomotor, motor cables or connectors selection

MECHATROLINK-II Servo Drives

Symbol	Specifications		Servo drive model	Compatible G5 series rotary servo motors ①
③	Single-phase, 120 VAC	50 W	R88D-KNA5L-ML2	R88M-K05030(H/T)-□
		100 W	R88D-KN01L-ML2	R88M-K10030(L/S)-□
		200 W	R88D-KN02L-ML2	R88M-K20030(L/S)-□
		400 W	R88D-KN04L-ML2	R88M-K40030(L/S)-□
	Single-phase, 230 VAC	100 W	R88D-KN01H-ML2	R88M-K05030(H/T)-□
				R88M-K10030(H/T)-□
		200 W	R88D-KN02H-ML2	R88M-K20030(H/T)-□
		400 W	R88D-KN04H-ML2	R88M-K40030(H/T)-□
		750 W	R88D-KN08H-ML2	R88M-K75030(H/T)-□
		1 kW	R88D-KN10H-ML2	R88M-K1K020(H/T)-□
		1.5 kW	R88D-KN15H-ML2	R88M-K1K030(H/T)-□
				R88M-K1K530(H/T)-□
				R88M-K1K520(H/T)-□
				R88M-K90010(H/T)-□
	Three-phase, 230 VAC	2 kW	R88D-KN20H-ML2	R88M-K2K030(H/T)-□
		3 kW	R88D-KN30H-ML2	R88M-K3K030(H/T)-□
		5 kW	R88D-KN50H-ML2	R88M-K5K030(H/T)-□
	Three-phase, 460 VAC	600 W	R88D-KN06F-ML2	R88M-K40020(F/C)-□
				R88M-K60020(F/C)-□
		1 kW	R88D-KN10F-ML2	R88M-K75030(F/C)-□
				R88M-K1K020(F/C)-□
		1.5 kW	R88D-KN15F-ML2	R88M-K1K030(F/C)-□
				R88M-K1K530(F/C)-□
				R88M-K1K520(F/C)-□
				R88M-K90010(F/C)-□
		2 kW	R88D-KN20F-ML2	R88M-K2K030(F/C)-□
				R88M-K2K020(F/C)-□
		3 kW	R88D-KN30F-ML2	R88M-K3K030(F/C)-□
				R88M-K3K020(F/C)-□
				R88M-K2K010(F/C)-□
		5 kW	R88D-KN50F-ML2	R88M-K4K030(F/C)-□
				R88M-K5K030(F/C)-□
				R88M-K4K020(F/C)-□
				R88M-K5K020(F/C)-□
				R88M-K3K010(F/C)-□

Ordering Information

Control Cables (for CN1)

Symbol	Description	Connect to		Model
④	I/O connector kit (26 pins)	For I/O general purpose	–	R88A-CNW01C
⑤	Terminal block cable	For I/O general purpose	1 m	XW2Z-100J-B34
			2 m	XW2Z-200J-B34
⑥	Terminal block (M3 screw and for pin terminals)		–	XW2B-20G4
	Terminal block (M3.5 screw and for fork/round terminals)		–	XW2B-20G5
	Terminal block (M3 screw and for fork/round terminals)		–	XW2D-20G6

Analog monitor (for CN5)

Symbol	Name		Model
⑦	Analog monitor cable	1 m	R88A-CMK001S

MECHATROLINK-II cables (for CN6)

Symbol	Specifications	Length	Model
⑧	MECHATROLINK-II Terminator resistor	–	FNY-W6022-E
	MECHATROLINK-II cables	0.5 m	FNY-W6003-A5-E
		1 m	FNY-W6003-01-E
		3 m	FNY-W6003-03-E
		5 m	FNY-W6003-05-E
		10 m	FNY-W6003-10-E
		20 m	FNY-W6003-20-E
		30 m	FNY-W6003-30-E

USB personal computer cable (for CN7)

Symbol	Name		Model
⑨	USB mini-connector cable	2 m	3G3AX-CUSBM002-E

MECHATROLINK-II Motion controllers

Symbol	Name	Model
⑩	Trajexia stand-alone motion controller	TJ1-MC04 (4 axes)
		TJ1-MC16 (16 axes)
		TJ2-MC64 (64 axes)
	Trajexia-PLC motion controller	CJ1W-MCH72
	Position Controller Unit for CJ1 PLC	CJ1W-NCF71 (16 axes)
		CJ1W-NC471 (4 axes)
		CJ1W-NC271 (2 axes)
	Position Controller Unit for CS1 PLC	CS1W-NCF71 (16 axes)
		CS1W-NC471 (4 axes)
		CS1W-NC271 (2 axes)

External regenerative resistor

Symbol	Regenerative resistor unit model	Specifications
⑪	R88A-RR08050S	50 Ω, 80 W
	R88A-RR080100S	100 Ω, 80 W
	R88A-RR22047S	47 Ω, 220 W
	R88A-RR50020S	20 Ω, 500 W

Filters

Specifications	Power	Drive model	Filter model	Rated current (A)	Leakage current (mA)
Single-phase, 120 VAC	50 W	R88D-KNA5L-ML2	R88A-FIK102-RE	2.4	3.5
	100 W	R88D-KN01L-ML2	R88A-FIK102-RE	2.4	3.5
	200 W	R88D-KN02L-ML2	R88A-FIK104-RE	4.1	3.5
	400 W	R88D-KN04L-ML2	R88A-FIK107-RE	6.6	3.5
Single-phase, 230 VAC	100 W	R88D-KN01H-ML2	R88A-FIK102-RE	2.4	3.5
	200 W	R88D-KN02H-ML2	R88A-FIK102-RE	2.4	3.5
	400 W	R88D-KN04H-ML2	R88A-FIK104-RE	4.1	3.5
	750 W	R88D-KN08H-ML2	R88A-FIK107-RE	6.6	3.5
	1.0 kW	R88D-KN10H-ML2	R88A-FIK114-RE	14.2	3.5
	1.5 kW	R88D-KN15H-ML2	R88A-FIK114-RE	14.2	3.5
Three-phase, 230 VAC	2.0 kW	R88D-KN20H-ML2	R88A-FIK212-RE	12	0.5/25[1]
	3.0 kW	R88D-KN30H-ML2	R88A-FIK222-RE	22	0.5/25[1]
	5.0 kW	R88D-KN50H-ML2	R88A-FIK222-RE	22	0.5/25[1]
Three-phase, 460 VAC	600 W	R88D-KN06F-ML2	R88A-FIK304-RE	4	0.3/32[1]
	1.0 kW	R88D-KN10F-ML2	R88A-FIK304-RE	4	0.3/32[1]
	1.5 kW	R88D-KN15F-ML2	R88A-FIK304-RE	4	0.3/32[1]
	2.0 kW	R88D-KN20F-ML2	R88A-FIK306-RE	6	0.3/32[1]
	3.0 kW	R88D-KN30F-ML2	R88A-FIK312-RE	12.1	0.3/32[1]
	5.0 kW	R88D-KN50F-ML2	R88A-FIK312-RE	12.1	0.3/32[1]

Note: 1. Momentary peak leakage current for the filter at switch-on/off.

Reactors

MECHATROLINK-II servo drive model	Reactor model
R88D-KNA5L-ML2/-KN01H-ML2	3G3AX-DL2002
R88D-KN01L-ML2/-KN02H-ML2	3G3AX-DL2004
R88D-KN02L-ML2/-KN04H-ML2	3G3AX-DL2007
R88D-KN04L-ML2/-KN08H-ML2/-KN10H-ML2	3G3AX-DL2015
R88D-KN15H-ML2	3G3AX-DL2022
R88D-KN08H-ML2/-KN10H-ML2/-KN15H-ML2/-KN06F-ML2/ -KN10F-ML2/-KN15F-ML2	3G3AX-AL2025
R88D-KN20H-ML2/-KN30H-ML2/-KN20F-ML2/-KN30F-ML2	3G3AX-AL2055
R88D-KN50H-ML2/-KN50F-ML2	3G3AX-AL2110

Connectors

Specifications	Model
External encoder connector (for CN4)	R88A-CNK41L
Safety I/O signal connector (for CN8)	R88A-CNK81S

Computer software

Specifications	Model
Configuration and monitoring software tool for servo drives and inverters. (CX-drive version 1.91 or higher)	CX-drive

Ordering Information

Accurax G5 series Analog/Pulse reference configuration

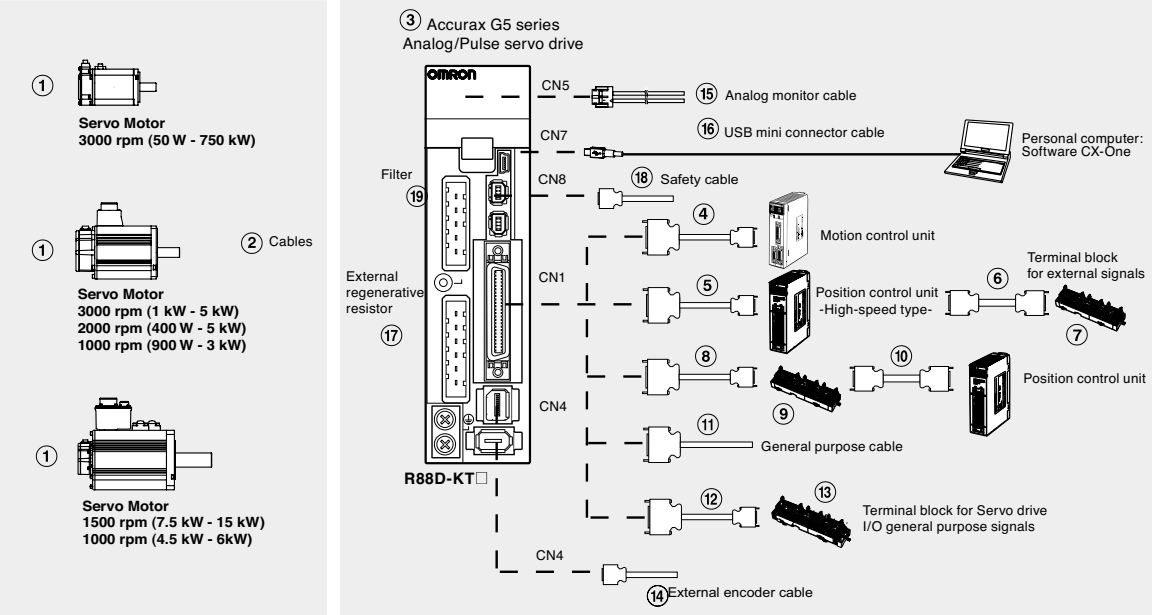

Note: The symbols ①②③... show the recommended sequence to select the Accurax G5 servo system

Servo motors power & encoder cables

Note: ①② Refer to the Accurax G5 servo motor section for servomotor, motor cables or connectors selection.

Servo Drives

Symbol	Specifications		Servo drive model[1]	Compatible Accurax G5 series rotary servo motors ①
③	Single-phase, 120 VAC	50 W	R88D-KTA5L	R88M-K05030(H/T)-□
		100 W	R88D-KT01L	R88M-K10030(L/S)-□
		200 W	R88D-KT02L	R88M-K20030(L/S)-□
		400 W	R88D-KT04L	R88M-K40030(L/S)-□
	Single-phase, 230 VAC	100 W	R88D-KT01H	R88M-K05030(H/T)-□
				R88M-K10030(H/T)-□
		200 W	R88D-KT02H	R88M-K20030(H/T)-□
		400 W	R88D-KT04H	R88M-K40030(H/T)-□
		750 W	R88D-KT08H	R88M-K75030(H/T)-□
		1.0 kW	R88D-KT10H	R88M-K1K020(H/T)-□
		1.5 kW	R88D-KT15H	R88M-K1K030(H/T)-□
				R88M-K1K530(H/T)-□
				R88M-K1K520(H/T)-□
				R88M-K90010(H/T)-□
	Three-phase, 230 VAC	2.0 kW	R88D-KT20H	R88M-K2K030(H/T)-□
				R88M-K2K020(H/T)-□
		3.0 kW	R88D-KT30H	R88M-K3K030(H/T)-□
				R88M-K3K020(H/T)-□
				R88M-K2K010(H/T)-□
		5.0 kW	R88D-KT50H	R88M-K3K010(H/T)-□
				R88M-K4K030(H/T)-□
				R88M-K4K020(H/T)-□
				R88M-K5K030(H/T)-□
				R88M-K5K020(H/T)-□
		7.5 kW	R88D-KT75H	R88M-K7K515T-□
	Three-phase, 460 VAC	600 W	R88D-KT06F	R88M-K40020(F/C)-□
				R88M-K60020(F/C)-□
		1.0 kW	R88D-KT10F	R88M-K75030(F/C)-□
				R88M-K1K020(F/C)-□
		1.5 kW	R88D-KT15F	R88M-K1K030(F/C)-□
				R88M-K1K530(F/C)-□
				R88M-K1K520(F/C)-□
				R88M-K90010(F/C)-□
		2.0 kW	R88D-KT20F	R88M-K2K030(F/C)-□
				R88M-K2K020(F/C)-□
		3.0 kW	R88D-KT30F	R88M-K3K030(F/C)-□
				R88M-K3K020(F/C)-□
				R88M-K2K010(F/C)-□
		5.0 kW	R88D-KT50F	R88M-K4K030(F/C)-□
				R88M-K5K030(F/C)-□
				R88M-K4K020(F/C)-□
				R88M-K5K020(F/C)-□
				R88M-K4K510(C)-□
				R88M-K3K010(F/C)-□
		7.5 kW	R88D-KT75F	R88M-K6K010(C)-□
				R88M-K7K515(C)-□
		15 kW	R88D-KT150F	R88M-K11K015(C)-□
				R88M-K15K015(C)-□

Note: 1. Drive Programming – embedded indexer functionality – is available in the Accurax G5 Analog/Pulse models with firmware 1.10 or higher.

Ordering Information

Control cables (for CN1)

Symbol	Description	Connect to		Model
④	Control cable (1 axis)	Motion control units CS1W-MC221 CS1W-MC421	1 m	R88A-CPG001M1
			2 m	R88A-CPG002M1
			3 m	R88A-CPG003M1
			5 m	R88A-CPG005M1
	Control cable (2 axis)	Motion control units CS1W-MC221 CS1W-MC421	1 m	R88A-CPG001M2
			2 m	R88A-CPG002M2
			3 m	R88A-CPG003M2
			5 m	R88A-CPG005M2
⑧	Cable from servo relay unit to servo drive	CS1W-NC1□3, CJ1W-NC1□3, C200HW-NC113, CS1W-NC2□3/4□3, CJ1W-NC2□3/4□3, C200HW-NC213/413, CQM1H-PLB21 or CQM1-CPU43	1 m	XW2Z-100J-B25
			2 m	XW2Z-200J-B25
		CJ1M-CPU21/22/23	1 m	XW2Z-100J-B31
			2 m	XW2Z-200J-B31
⑨	Servo relay unit	Position control units CS1W-NC1□3, CJ1W-NC1□3 or C200HW-NC113	–	XW2B-20J6-1B (1 axis)
		Position control units CS1W-NC2□3/4□3, CJ1W-NC2□3/4□3 or C200HW-NC213/413	–	XW2B-40J6-2B (2 axes)
		CQM1H-PLB21 or CQM1-CPU43	–	XW2B-20J6-3B (1 axis)
		CJ1M-CPU21/22/23	–	XW2B-20J6-8A (1 axis) XW2B-40J6-9A (2 axes)
⑩	Position control unit connecting cable	CQM1H-PLB21	0.5 m	XW2Z-050J-A3
			1 m	XW2Z-100J-A3
		CS1W-NC113 or C200HW-NC113	0.5 m	XW2Z-050J-A6
			1 m	XW2Z-100J-A6
		CS1W-NC213/413 or C200HW-NC213/413	0.5 m	XW2Z-050J-A7
			1 m	XW2Z-100J-A7
		CS1W-NC133	0.5 m	XW2Z-050J-A10
			1 m	XW2Z-100J-A10
		CS1W-NC233/433	0.5 m	XW2Z-050J-A11
			1 m	XW2Z-100J-A11
		CJ1W-NC113	0.5 m	XW2Z-050J-A14
			1 m	XW2Z-100J-A14
		CJ1W-NC213/413	0.5 m	XW2Z-050J-A15
			1 m	XW2Z-100J-A15
		CJ1W-NC133	0.5 m	XW2Z-050J-A18
			1 m	XW2Z-100J-A18
		CJ1W-NC233/433	0.5 m	XW2Z-050J-A19
			1 m	XW2Z-100J-A19
		CJ1M-CPU21/22/23	0.5 m	XW2Z-050J-A33
			1 m	XW2Z-100J-A33
⑪	General purpose cable	For general purpose controllers	1 m	R88A-CPG001S
			2 m	R88A-CPG002S
⑫	Terminal block cable	For general purpose controllers	1 m	XW2Z-100J-B24
			2 m	XW2Z-200J-B24
⑬	Terminal block (M3 screw and for pin terminals)		–	XW2B-50G4
	Terminal block (M3.5 screw and for fork/round terminals)		–	XW2B-50G5
	Terminal block (M3 screw and for fork/round terminals)		–	XW2D-50G6

Ordering Information

Analog monitor (for CN5)

⑭	Analog monitor cable	1 m	R88A-CMK001S

USB personal computer cable (for CN7)

Symbol	Name		Model
⑮	USB mini-connector cable	2 m	3G3AX-CUSBM002-E

External regenerative resistor

Symbol	Regenerative resistor unit model	Specifications
⑯	R88A-RR08050S	50 Ω, 80 W
	R88A-RR080100S	100 Ω, 80 W
	R88A-RR22047S	47 Ω, 220 W
	R88A-RR50020S	20 Ω, 500 W

Filters

Specifications	Power	Drive model	Filter model	Rated current (A)	Leakage current (mA)
Single-phase, 120 VAC	50 W	R88D-KTA5L	R88A-FIK102-RE	2.4	3.5
	100 W	R88D-KT01L	R88A-FIK102-RE	2.4	3.5
	200 W	R88D-KT02L	R88A-FIK104-RE	4.1	3.5
	400 W	R88D-KT04L	R88A-FIK107-RE	6.6	3.5
Single-phase, 230 VAC	100 W	R88D-KT01H	R88A-FIK102-RE	2.4	3.5
	200 W	R88D-KT02H	R88A-FIK102-RE	2.4	3.5
	400 W	R88D-KT04H	R88A-FIK104-RE	4.1	3.5
	750 W	R88D-KT08H	R88A-FIK107-RE	6.6	3.5
	1.0 kW	R88D-KT10H	R88A-FIK114-RE	14.2	3.5
	1.5 kW	R88D-KT15H	R88A-FIK114-RE	14.2	3.5
Three-phase, 230 VAC	2.0 kW	R88D-KT20H	R88A-FIK212-RE	12	0.5/25[1]
	3.0 kW	R88D-KT30H	R88A-FIK222-RE	22	0.5/25[1]
	5.0 kW	R88D-KT50H	R88A-FIK222-RE	22	0.5/25[1]
	7.5 kW	R88D-KT75H	–	–	–
Three-phase, 460 VAC	600 W	R88D-KT06F	R88A-FIK304-RE	4	0.3/32[1]
	1.0 kW	R88D-KT10F	R88A-FIK304-RE	4	0.3/32[1]
	1.5 kW	R88D-KT15F	R88A-FIK304-RE	4	0.3/32[1]
	2.0 kW	R88D-KT20F	R88A-FIK306-RE	6	0.3/32[1]
	3.0 kW	R88D-KT30F	R88A-FIK312-RE	12.1	0.3/32[1]
	5.0 kW	R88D-KT50F	R88A-FIK312-RE	12.1	0.3/32[1]
	7.5 kW	R88D-KT75F	R88A-FIK330-RE	22	0.3/40[1]
	15 kW	R88D-KT150F	R88A-FIK350-RE	44	2.0/130[1]

Note: 1. Momentary peak leakage current for the filter at switch-on/off.

Reactors

Analog/Pulse servo drive model	Reactor model
R88D-KTA5L/-KT01H	3G3AX-DL2002
R88D-KT01L/-KT02H	3G3AX-DL2004
R88D-KT02L/-KT04H	3G3AX-DL2007
R88D-KT04L/-KT08H/-KT10H	3G3AX-DL2015
R88D-KT15H	3G3AX-DL2022
R88D-KT08H/-KT10H/-KT15H	3G3AX-AL2025
R88D-KT20H/-KT30H	3G3AX-AL2055
R88D-KT50H	3G3AX-AL2110

Connectors

Specifications	Model
I/O connector kit -50 pins-(for CN1)	R88A-CNU11C
External encoder connector (for CN4)	R88A-CNK41L
Safety I/O signal connector (for CN8)	R88A-CNK81S

Computer software

Specifications	Model
Sysmac Studio version 1.0 or higher	SYSMAC-SE2□□□
CX-Drive version 2.10 or higher	CX-DRIVE 2.10
CX-One software package including CX-Drive 2.10 or higher	CX-ONE

Ordering Information

Encoder, Power and Brake Cables and Connectors

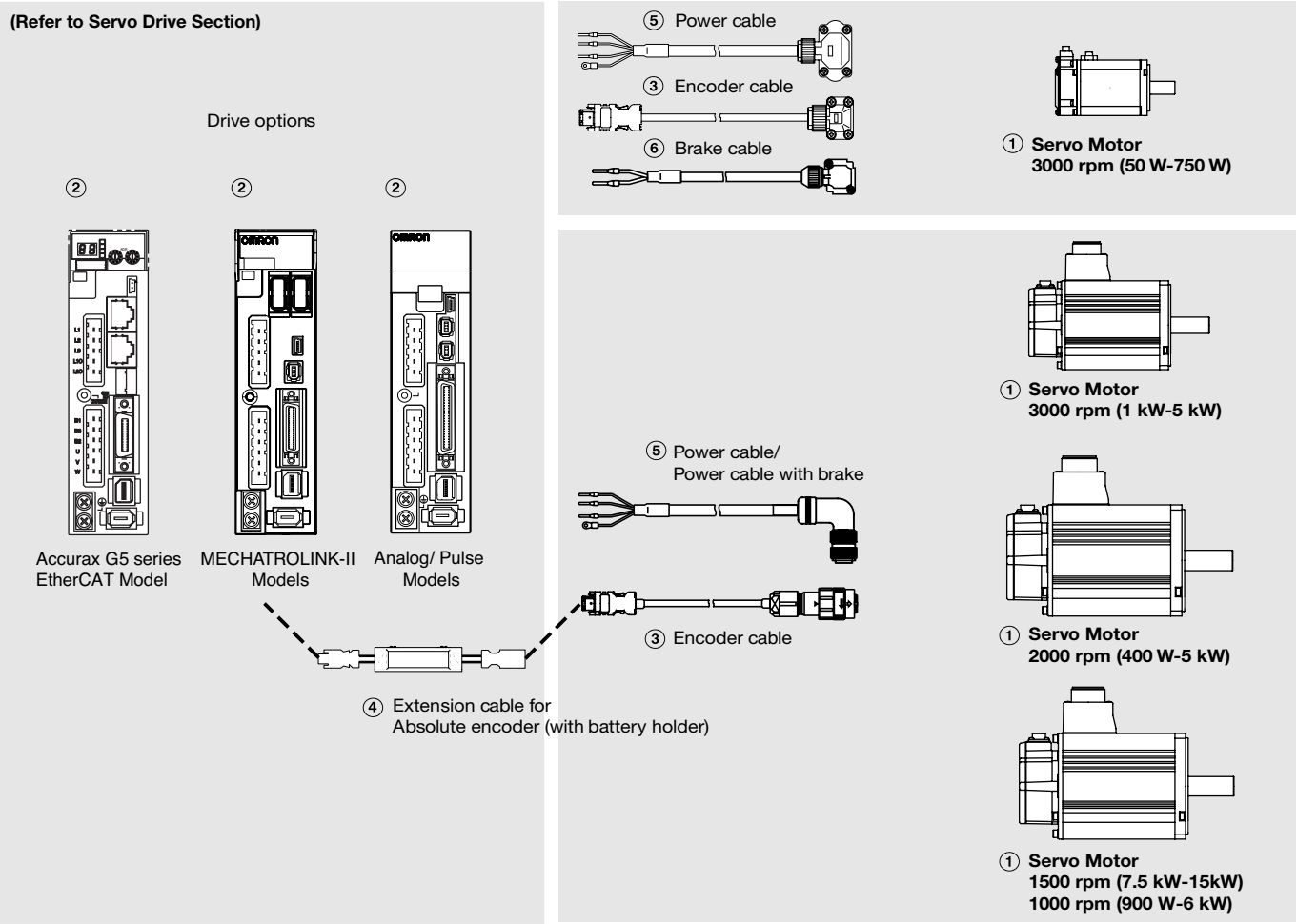

Note: The symbols ①②③... show the recommended sequence to select the servo motor and cables

Servo motor ① Select motor from R88M-K family using motor tables in next pages.

Servo drive ② Refer to Accurax G5 servo drive section for detailed drive specifications and selection of drive accessories.

Encoder cables for absolute and incremental encoders

Symbol	Specifications		Model	Appearance
③	Encoder cable for Servomotors [120 V and 230 V] For 3,000-r/min motors of 50 to 750 W (for both absolute encoders and incremental encoders)	1.5 m	R88A-CRKA001-5CR-E	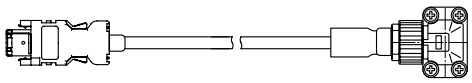
		3 m	R88A-CRKA003CR-E	
		5 m	R88A-CRKA005CR-E	
		10 m	R88A-CRKA010CR-E	
		15 m	R88A-CRKA015CR-E	
		20 m	R88A-CRKA020CR-E	
	Encoder cable for Servomotors [120 V and 230 V] For 3,000-r/min motors of 1.0 kW or more For 2,000-r/min motors For 1,000-r/min motors [460 V] For 3,000-r/min motors For 2,000-r/min motors For 1,500-r/min motors For 1,000-r/min motors	1.5 m	R88A-CRKC001-5NR-E	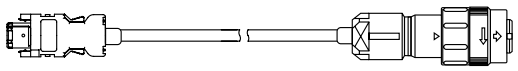
		3 m	R88A-CRKC003NR-E	
		5 m	R88A-CRKC005NR-E	
		10 m	R88A-CRKC010NR-E	
		15 m	R88A-CRKC015NR-E	
		20 m	R88A-CRKC020NR-E	

Note: For servomotors fitted with an absolute encoder you have to add the extension battery cable R88A-CRGD0R3C□ (see below) or connect a backup battery in the CN1 I/O connector.

Note: Contact Omron for 30, 40 and 50 m long cables.

Ordering Information

Absolute Encoder Battery cable (encoder extension cable only)

Symbol	Specifications			Model	Appearance
④	Absolute Encoder battery cable	Battery not included	0.3 m	R88A-CRGD0R3C	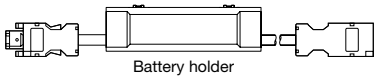 Battery holder
		Battery included (R88A-BAT01G)	0.3 m	R88A-CRGD0R3C-BS	
	Absolute Encoder backup battery	2,000 mA.h 3.6 V	–	R88A-BAT01GE	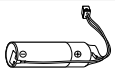

Motor Power Cables

Symbol	Specifications			Model	Appearance
⑤	For 230 V servomotors R88M-K(050/100/200/400/750)30(H/T)□ Note: for servomotors with brake R88M-K(050/100/200/400/750)30(H/T)-BS2, the separate brake cable R88A-CAKA□ □ □BR-E is needed	Power cable only (without brake)	1.5 m	R88A-CAKA001-5SR-E	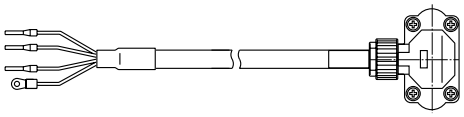
			3 m	R88A-CAKA003SR-E	
			5 m	R88A-CAKA005SR-E	
			10 m	R88A-CAKA010SR-E	
			15 m	R88A-CAKA015SR-E	
			20 m	R88A-CAKA020SR-E	
	For 230 V servomotors R88M-K(1K0/1K5)30(H/T)□ R88M-K(1K0/1K5)20(H/T)□ R88M-K90010(H/T)□	without brake □-S2	1.5 m	R88A-CAGB001-5SR-E	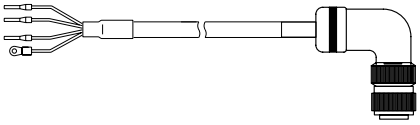
			3 m	R88A-CAGB003SR-E	
			5 m	R88A-CAGB005SR-E	
			10 m	R88A-CAGB010SR-E	
			15 m	R88A-CAGB015SR-E	
			20 m	R88A-CAGB020SR-E	
		with brake □-BS2	1.5 m	R88A-CAGB001-5BR-E	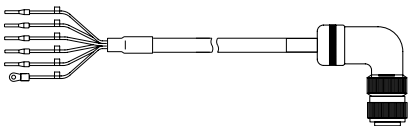
			3 m	R88A-CAGB003BR-E	
			5 m	R88A-CAGB005BR-E	
			10 m	R88A-CAGB010BR-E	
			15 m	R88A-CAGB015BR-E	
			20 m	R88A-CAGB020BR-E	
	For 460 V servomotors R88M-K(750/1K0/1K5/2K)30(F/C)□ R88M-K(400/600/1K0/1K5/2K0)20(F/C)□ R88M-K90010(F/C)□	without brake □-S2	1.5 m	R88A-CAGB001-5SR-E	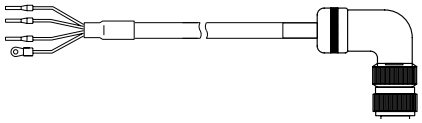
			3 m	R88A-CAGB003SR-E	
			5 m	R88A-CAGB005SR-E	
			10 m	R88A-CAGB010SR-E	
			15 m	R88A-CAGB015SR-E	
			20 m	R88A-CAGB020SR-E	
		with brake □-BS2	1.5 m	R88A-CAKF001-5BR-E	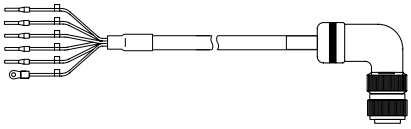
			3 m	R88A-CAKF003BR-E	
			5 m	R88A-CAKF005BR-E	
			10 m	R88A-CAKF010BR-E	
			15 m	R88A-CAKF015BR-E	
			20 m	R88A-CAKF020BR-E	
	For 460 V servomotors R88M-K(3K0/4K0/5K0)30(F/C)□ R88M-K(3K0/4K0/5K0)20(F/C)□ R88M-K(2K0/3K0)10(F/C)□ R88M-K4K510C□	without brake □-S2	1.5 m	R88A-CAGD001-5SR-E	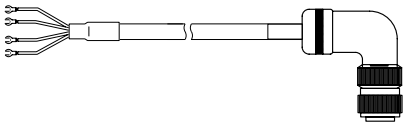
			3 m	R88A-CAGD003SR-E	
			5 m	R88A-CAGD005SR-E	
			10 m	R88A-CAGD010SR-E	
			15 m	R88A-CAGD015SR-E	
			20 m	R88A-CAGD020SR-E	
		with brake □-BS2	1.5 m	R88A-CAGD001-5BR-E	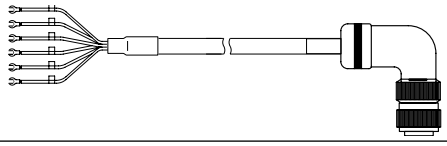
			3 m	R88A-CAGD003BR-E	
			5 m	R88A-CAGD005BR-E	
			10 m	R88A-CAGD010BR-E	
			15 m	R88A-CAGD015BR-E	
			20 m	R88A-CAGD020BR-E	
	For 460 V servomotors R88M-K6K010C□ R88M-K7K515C□ Note: for servomotors with brake R88MK (6K010/7K515)C-BS2 the separate brake cable R88A-CAGE□□□BR-E is needed	Power cable only (without brake)	1.5 m	R88A-CAKE001-5SR-E	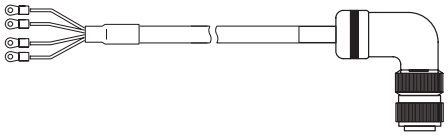
			3 m	R88A-CAKE003SR-E	
			5 m	R88A-CAKE005SR-E	
			10 m	R88A-CAKE010SR-E	
			15 m	R88A-CAKE015SR-E	
			20 m	R88A-CAKE020SR-E	
	For 460 V servomotors R88M-K(11K0/15K0)15C Note: for servomotors with brake R88MK (11K0/15K0)15C-BS2, the separate brake cable R88A-CAGE□□□BR-E is needed	Power cable only (without brake)	1.5 m	R88A-CAKG001-5SR-E	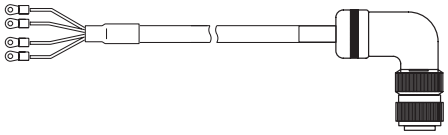
			3 m	R88A-CAKG003SR-E	
			5 m	R88A-CAKG005SR-E	
			10 m	R88A-CAKG010SR-E	
			15 m	R88A-CAKG015SR-E	
			20 m	R88A-CAKG020SR-E	

Ordering Information

Brake cable (for 3000 r/min 50-750 W Motors)

Symbol	Specifications		Model	Appearance
⑥	Brake cable only. For 230 V servo motors with brake R88M-K(050/100/200/400/750)30(H/T)-BS2	1.5 m	R88A-CAKA001-5BR-E	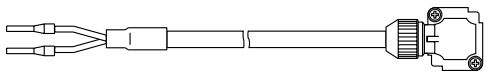
		3 m	R88A-CAKA003BR-E	
		5 m	R88A-CAKA005BR-E	
		10 m	R88A-CAKA010BR-E	
		15 m	R88A-CAKA015BR-E	
		20 m	R88A-CAKA020BR-E	

Note: Contact Omron for 30, 40 and 50 m long cables.

Connectors for encoder, power and brake cables

Specifications		Applicable Servo motor	Model
Connectors for making encoder cables	Drive side (CN2)	All models	R88A-CNW01R
	Motor side	R88M-K(050/100/200/400/750)30(H/T)□	R88A-CNK02R
	Motor side	R88M-K(1K0/1K5)30(H/T)□ R88M-K(750/1K0/1K5/2K0/3K0/4K0/5K0)30(F/C)□ R88M-K(400/600/1K0/1K5/2K0/3K0/4K0/5K0)20□ R88M-K(900/2K0/3K0)10□ R88M-K(4K5/6K0)10C-□ R88M-K(7K5/11K0/15K0)15C-□	R88A-CNK04R
Connectors for making power cables	Motor side	R88M-K(050/100/200/400/750)30(H/T)□	R88A-CNK11A
	Motor side	R88M-K(1K0/1K5)30(H/T)-S2 R88M-K(1K0/1K5)20(H/T)-S2 R88M-K90010(H/T)-S2 R88M-K(750/1K0/1K5/2K0)30(F/C)-S2, R88M-K(400/600/1K0/1K5/2K0)20(F/C)-S2 R88M-K90010(F/C)-S2	MS3108E20-4S
	Motor side	R88M-K(1K0/1K5)30(H/T)-BS2 R88M-K(1K0/1K5)20(H/T)-BS2 R88M-K90010(H/T)-BS2	MS3108E20-18S
	Motor side	R88M-K(750/1K0/1K5/2K0/3K0/4K0/5K0)30(F/C)-BS2 R88M-K(400/600/1K0/1K5/2K0/3K0/4K0/5K0)20(F/C)-BS2 R88M-K(900/2K0/3K0)10(F/C)-BS2 R88M-K4K510C-BS2	MS3108E24-11S
	Motor side	R88M-K(3K0/4K0/5K0)30(F/C)-S2 R88M-K(3K0/4K0/5K0)20(F/C)-S2 R88M-K(2K0/3K0)10(F/C)-S2 R88M-K4K510C-S2	MS3108E22-22S
	Motor side	R88M-K6K010C-□ R88M-K(7K5/11K0/15K0)15C-□	MS3108E32-17S
Connector for brake cable	Motor side	R88M-K(050/100/200/400/750)30(H/T)-BS2	R88A-CNK11B
	Motor side	R88M-K6K010C-BS2 R88M-K(7K5/11K0/15K0)15C-BS2	MS3108E14S-2S

Note: 1. All cables listed are flexible and shielded (except the R88A-CAKA□□□-BR-E which is only a flexible cable).
2. All connectors and cables listed have IP67 class (except R88A-CNW01R connector and R88A-CRGD0R3C cable).

ALL DIMENSIONS SHOWN ARE IN MILLIMETERS.
To convert millimeters into inches, multiply by 0.03937. To convert grams into ounces, multiply by 0.03527.

OMRON
AUTOMATION & SAFETY

OMRON AUTOMATION AND SAFETY • THE AMERICAS HEADQUARTERS • Schaumburg, IL USA • 847.843.7900 • 800.556.6766 • www.omron247.com

OMRON CANADA, INC. • HEAD OFFICE
Toronto, ON, Canada • 416.286.6465 • 866.986.6766 • www.omron247.com

OMRON ELECTRONICS DE MEXICO • HEAD OFFICE
México DF • 52.55.59.01.43.00 • 001.800.556.6766 • mela@omron.com

OMRON ELECTRONICS DE MEXICO • SALES OFFICE
Apodaca, N.L. • 52.81.11.56.99.20 • 001.800.556.6766 • mela@omron.com

OMRON ELETRÔNICA DO BRASIL LTDA • HEAD OFFICE
São Paulo, SP, Brasil • 55.11.2101.6300 • www.omron.com.br

OMRON ARGENTINA • SALES OFFICE
Cono Sur • 54.11.4783.5300

OMRON CHILE • SALES OFFICE
Santiago • 56.9.9917.3920

OTHER OMRON LATIN AMERICA SALES
54.11.4783.5300

OMRON EUROPE B.V. • Wegalaan 67-69, NL-2132 JD, Hoofddorp, The Netherlands. • Tel: +31 (0) 23 568 13 00 • Fax: +31 (0) 23 568 13 88 • www.industrial.omron.eu

Authorized Distributor:

Automation Control Systems
• Machine Automation Controllers (MAC) • Programmable Controllers (PLC)
• Operator interfaces (HMI) • Distributed I/O • Software

Drives & Motion Controls
• Servo & AC Drives • Motion Controllers & Encoders

Temperature & Process Controllers
• Single and Multi-loop Controllers

Sensors & Vision
• Proximity Sensors • Photoelectric Sensors • Fiber-Optic Sensors
• Amplified Photomicrosensors • Measurement Sensors
• Ultrasonic Sensors • Vision Sensors

Industrial Components
• RFID/Code Readers • Relays • Pushbuttons & Indicators
• Limit and Basic Switches • Timers • Counters • Metering Devices
• Power Supplies

Safety
• Laser Scanners • Safety Mats • Edges and Bumpers • Programmable Safety Controllers • Light Curtains • Safety Relays • Safety Interlock Switches

I28I-E-03 Note: Specifications are subject to change. © 2012 Omron Electronics LLC Printed in U.S.A.

Printed on recycled paper.

ООО «ЛайфЭлектроникс» “LifeElectronics” LLC

ИНН 7805602321 КПП 780501001 Р/С 40702810122510004610 ФАКБ "АБСОЛЮТ БАНК" (ЗАО) в г.Санкт-Петербурге К/С 30101810900000000703 БИК 044030703

Компания «Life Electronics» занимается поставками электронных компонентов импортного и отечественного производства от производителей и со складов крупных дистрибьюторов Европы, Америки и Азии.

С конца 2013 года компания активно расширяет линейку поставок компонентов по направлению коаксиальный кабель, кварцевые генераторы и конденсаторы (керамические, пленочные, электролитические), за счёт заключения дистрибьюторских договоров

Мы предлагаем:

- *Конкурентоспособные цены и скидки постоянным клиентам.*
- *Специальные условия для постоянных клиентов.*
- *Подбор аналогов.*
- *Поставку компонентов в любых объемах, удовлетворяющих вашим потребностям.*

- *Приемлемые сроки поставки, возможна ускоренная поставка.*
- *Доставку товара в любую точку России и стран СНГ.*
- *Комплексную поставку.*
- *Работу по проектам и поставку образцов.*
- *Формирование склада под заказчика.*

- *Сертификаты соответствия на поставляемую продукцию (по желанию клиента).*
- *Тестирование поставляемой продукции.*
- *Поставку компонентов, требующих военную и космическую приемку.*
- *Входной контроль качества.*
- *Наличие сертификата ISO.*

В составе нашей компании организован Конструкторский отдел, призванный помогать разработчикам, и инженерам.

Конструкторский отдел помогает осуществить:

- *Регистрацию проекта у производителя компонентов.*
- *Техническую поддержку проекта.*
- *Защиту от снятия компонента с производства.*
- *Оценку стоимости проекта по компонентам.*
- *Изготовление тестовой платы монтаж и пусконаладочные работы.*

Тел: +7 (812) 336 43 04 (многоканальный)
Email: org@lifeelectronics.ru

www.lifeelectronics.ru