**Pro Audio & Broadcast Catalog**
Sixth Edition

# Switchcraft®

Switchcraft®
www.switchcraft.com

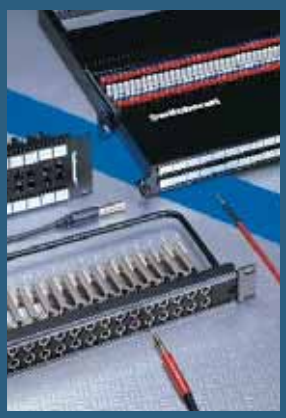
Patchbays, Patchcords & Molded Cable Assemblies

Connectors and Adapters

Jacks and Plugs

Guitar Switches

* Please visit the product pages on our website for the most up-to-date product information



## About Switchcraft, Inc.

Switchcraft, Inc. was established in 1946 to manufacture jacks, plugs, and switches. We have since become the industry leader in producing a wide variety of connectors, adapters, jacks and plugs, patchbays, jackfields, and switches. While our products cover a diverse number of markets, this catalog focuses on our line of audio and video products, typically found in broadcast, recording, sound reinforcement, and other pro audio applications.

Some of the new products you'll find in this catalog include our EZ Norm Series of audio patchbays, where normal configurations can be changed from the front of the patchbay, using a standard screwdriver. Also found in this edition are new combination audio/video patchbays in both standard/long-frame and midsize/bantam styles. In the connector section, we're offering a new line of connectors called our EH Series, incorporating a wide range of connectors (Firewire, USB, Category 6, BNC, RCA, and more) in a standard XLR housing.

Please keep in mind that this is just a small sampling of our complete product lines. For more detailed information, we offer our "full line" catalog, our Engineering Design Guide.

Our Engineering Design Guide includes over 5,000 part numbers covering all five major product lines. If you don't see it here, chances are you'll find it in the EDG. And again, keep in mind that the EDG is also just a "snapshot" of our capabilities. We manufacture over 30,000 part numbers, so if it's not in the EDG, please contact us with your requirements. To keep up on all the new products we have to offer, visit our website at **www.switchcraft.com** and look for the New Product Showcase.


| | |
|---|---|
| *Patchbay Series* | *4 – 43* |
| *Patchcords/Molded Cables* | *44 – 45* |
| *Connector Series* | *46 – 62* |
| *Audio Adapter Series* | *63 – 64* |
| *Jack Series* | *65 – 82* |
| *Plug Series* | *83 – 93* |
| *Switch Series* | *94 – 96* |
| *Index* | *98 – 100* |


***Detailed Table of Contents — Pages 2 – 3***

* Please visit the product pages on our website for the most up-to-date product information



# Table of Contents

## Patchbays

Professional Punchdown Terminal (PPT) .....4
Audio Patchbay Series .....5–33
MTPH/TTPH Harness Series .....5-7
Front Access Series .....8–9
EZ Norm Patchbay Series.....10–11
RS 422 Data Patchbay Series .....12–13
MTP48K Wired Series .....14–15
TTPW96K Wired Series.....16–17
MTPBP/TTPBP Backpanel Series .....18–19
TT96 EDAC Series .....20–21
TTP96K Patchkit Series .....22–23
MT48K/MT52K Patchkit Series .....24–25
MT48/MT52 Patchbay Series .....26–27
TTP96AS Patchbay Series.....28–29
HPC Patchbay Series .....30–31
Q-G® Patchbay Series .....32–33
Video/Audio Patchbay Series.....34–44
VPP Video Patchbay Series.....34–36
MVP Midsize Video Patchbay Series.....37–39
VAP Video/Audio Patchbay Series .....40–41
MVEZN Audio/Midsize Patchbay Series.....42
MBPK Video/Audio Patchbay Series .....43
Audio and Video Patchcords .....44–45

## Connectors

Q-G® Audio Connector Series .....46-48
A, AA, AAA Cord Style Series .....46
B, C, D, E Panel Style Series.....47
J, K, P, R, T Wallplate, Gooseneck,
Panel & Cord Style Series.....48
Tini-Q-G® Connector Series .....49
Tini-Q-G® Cord & Panel Style Series .....49
HPC Connector Series .....50-51
HPC Panel Style Series .....50
HPC Cord, & Adapter Style Series.....51
EH Series Receptacles .....52
MIDI and 2500 Series .....53
HP75BNC Series .....54
Connector Dimension Drawings .....55–62
HP75BNC Series, EH Series .....55
Q-G Audio - A, AA, AAA Series .....56
Q-G Audio - B, C, D, E Series .....57
Q-G Audio - J, K, P, R Series.....58
Q-G Audio - T Series .....59
MIDI, Q-G Audio - P Series.....60
HPC Panel Style Series .....61–62

## Audio Adapters

XLR to XLR, RCA, 1/4", TQ-G Adapter Series .....63
1/4" to 1/4", RCA; RCA to RCA;
& Miscellaneous Adapter Series.....64

Switc

* Please visit the product pages on our website for the most up-to-date product information



## Jacks & Plugs

### Jack Series

Littel Phone, Hi-D, Right Angle PC Mount 1/4", 1/4" Extension Jack Series .....65
Thick Panel/Guitar, Locking 1/4", Tini, Tini-Extension, Micro, 3.5mm .....67
Phono, Phono Extension, TT or Bantam, MT 1/4" Jack Series .....69
Power/Jacks Plugs Series – 700, S700, 800 Cord & Panel Style Series .....71
Jack Series Dimension Drawings .....72–82
Littel Phone, Hi-D, 1/4" Extension, 700 Panel Jack Series .....72
Littel Phone, Hi-D, 1/4" Extension Jack Series.....73
Right Angle PC Mount 1/4" Jack Series .....74
Thick Panel/Guitar, Locking 1/4", Tini, Tini Extension Jack Series .....75
Micro, 3.5mm Jack Series .....76
3.5mm Jack Series.....77–79
Phono and Phono Extension Jack Series .....80
TT or Bantam Jack Series.....81
MT 1/4" Jack Series.....82

### Plug Series

Littel 1/4", Right Angle 1/4", Silent, Super Heavy Duty Plug Series .....83
Tini, Micro, 3.5mm Stereo, Right Angle 3.5mm Stereo, Phono, Right Angle Phono Plugs Series ..85
TT or Bantam, Mil-Style 1/4" Plugs Series .....87
Plug Series Dimension Drawings .....88–93
Littel Plug 1/4" Series .....88
Littel Right Angle 1/4", Silent, Super Heavy Duty Plug Series .....89
Tini, Micro Plug Series .....90
35HD 3.5mm Stereo Plug Series .....91
Phono and Phone Right Angle Plug Series .....92
TT or Bantam, Mil-Style 1/4" Plug Series .....93

## Switches

Switch Series.....94–95
Switch Series Dimension Drawings .....96

**Limited Lifetime Warranty**

Switchcraft warrants all of its products to be of sound design, good materials and workmanship at the time of manufacture.

Switchcraft will repair or replace at its discretion any product proven to be defective under normal use.

Switchcraft's liability under the terms of this warranty is limited to the repair or replacement of defective products which have not been damaged through accident, abuse, misuse or unauthorized repair. Switchcraft shall in no case be liable for special or consequential damages of any nature.

Switchcraft®
www.switchcraft.com
5555 North Elston Avenue / Chicago, IL 60630
Phone: 773-792-2700 / Fax: 773-792-2129

# Our Patchbays Now Feature the New Professional Punchdown Terminal (PPT)

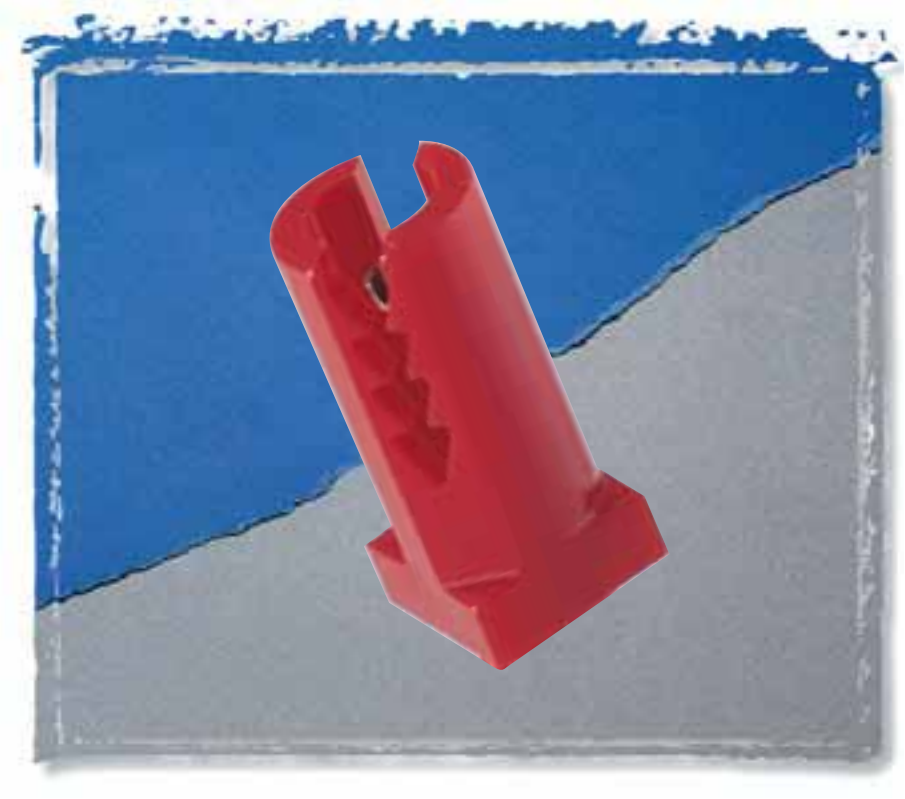

## Our Patchbays Have Just Rounded A New Corner

Actually, the corners we rounded belong to our patchbays' revolutionary, new Professional Punchdown Terminal (PPT), making it perfectly compatible with the industry standard. We realized that achieving a new industry standard meant we couldn't cut any corners to get there.

The PPT design incorporates a split-barrel design and a more rugged, thicker housing to minimize the impact of repeated punchdowns. The split-barrel design eliminates the problems associated with the old "V-shaped" terminal designs. The PPT design distributes pressure evenly across both sides of the terminated wire, causing improved wire retention plus more reliable connections. The serrated teeth in the plastic housing firmly grip the wires, which also greatly improves wire retention. With the PPT, multiple wires can be terminated to a single contact, and a wide range of wire gauges can be used.

Look for Switchcraft's PPT in our MTP and TTP Series of audio patchbays, and in our new Backpanel Series. All Switchcraft audio patchbays incorporate heavy gauge materials and our high quality nickel-plated, steel framed jacks. Gold-plated, crossbar contacts come standard!

### Materials

Housing: Thermoplastic (UL 94V-0)
Contacts: High strength copper alloy, tin plated
Wire size: Accommodates #22, 24, or 26 AWG, stranded or solid

### Accessories

| Part Number | Description |
|---|---|
| **K459** | PPT replacement kit consists of 15 of each color* (IDC/IDC) |
| **K460** | PPT replacement kit consists of 15 of each color (IDC/wirewrap) |
| **PT1LA** | PPT impact punchdown tool |
| **PT2B** | Replacement bit for PT1LA tool |

**Colors consist of red, black, white, yellow, blue, and orange.*

DIGITAL AES / EBU Digital Ready!



# MTPH/TTPH Harness Series



## Features and Benefits

- Units feature either 48 MT style jacks or 96 TT style jacks on the front panels, to a 4 foot harness, out to a backpanel with PPT's
- All versions utilize AES/EBU wiring for complete digital compatibility
- Attractive, corrosion resistant nickel-plated, steel frame jacks
- Gold-plated switching contacts reduce contact resistance, improve reliability

## Specifications

### Materials

Jacks
- Frame: Nickel-plated steel
- Bushing: Nickel-plated brass
- Tip, Ring and Shunt Springs: Nickel silver with welded contacts
- Assembly Screws: Zinc-plated steel
- Welded Contacts: Gold alloy

Panel
- Front Channel: Black anodized aluminum
- Frame: C.R.S. black epoxy painted
- Designation Strips: Black polycarbonate 94V-0
- Designation Strip Covers: Clear polycarbonate
- Jack Inserts: Thermoplastic polyester

### Mechanical

- Life: 30,000 cycles
- Insertion Force: 7 lbs. maximum
- Withdrawal Force: 1 lb. minimum
- Environmental: 0˚C to +50˚C

### Electrical

- Contact Resistance: 30 milliohms maximum initial
- Insulation Resistance: 10,000 megohms maximum
- Dielectric Withstanding Voltage: 500 VAC at 60 Hz
- Working Voltage: 140 VDC maximum
- Current Rating: 100 milliamps

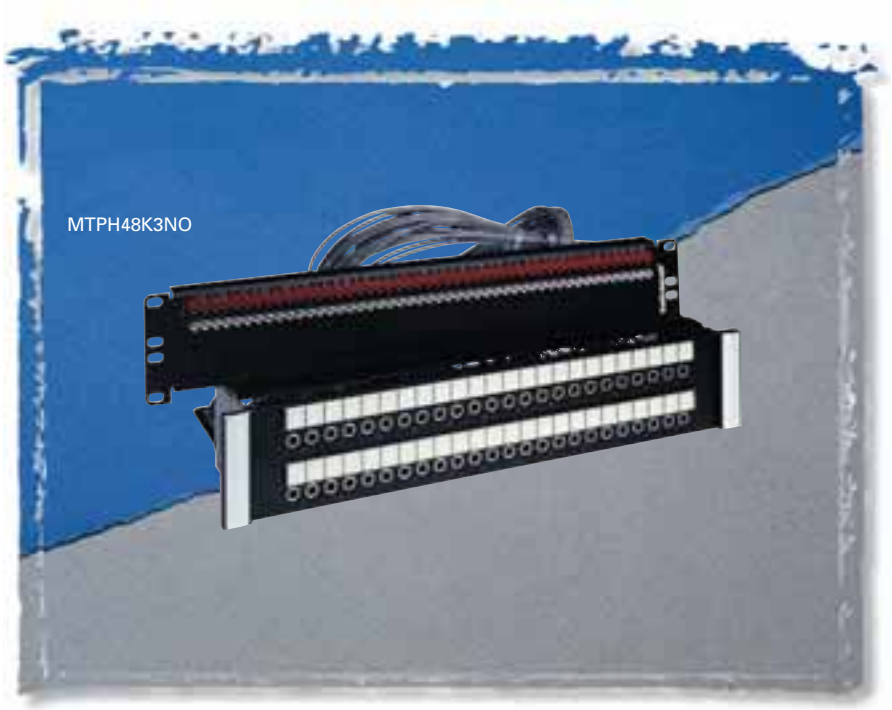


**The MTPH and TTPH Harness Series utilize standard front panel assemblies, a 4-foot cable harness, and our standard back panel assemblies. Primarily used where the back panels must either be mounted into a rack, or brought back to the front for easier access. Custom cable lengths can also be supplied. Contact the factory for details.**

## Ordering Information

| Part Number | Type of Jack | No. of Jacks | Description |
|---|---|---|---|
| MTPH48K1NS | MT | 48 | 1.75" High front panel, 4' Harness, 3.5" High back panel, normals strapped |
| MTPH48K1NO | MT | 48 | 1.75" High front panel, 4' Harness, 3.5" High back panel, normals brought out |
| MTPH48K3NS | MT | 48 | 3.5" High front panel, 4' Harness, 3.5" High back panel, normals strapped |
| MTPH48K3NO | MT | 48 | 3.5" High front panel, 4' Harness, 3.5" High back panel, normals brought out |
| MTPH48K3SNO | MT | 48 | 3.5" High front panel, 4' Harness, 3.5" High back panel, sleeve normals brought out |
| TTPH96K1NS | TT | 96 | 1.75" High front panel, 4' Harness, 3.5" High back panel, normals strapped |
| TTPH96K1NO | TT | 96 | 1.75" High front panel, 4' Harness, 5.25" High back panel, normals brought out |
| TTPH96K3NS | TT | 96 | 3.5" High front panel, 4' Harness, 3.5" High back panel, normals strapped |
| TTPH96K3NO | TT | 96 | 3.5" High front panel, 4' Harness, 5.25" High back panel, normals brought out |

**See Next Page for Mechanical Drawings**



5555 North Elston Avenue / Chicago, IL 60630
Phone: 773-792-2700 / Fax: 773-792-2129

# 6 MTPH/TTPH Harness Series

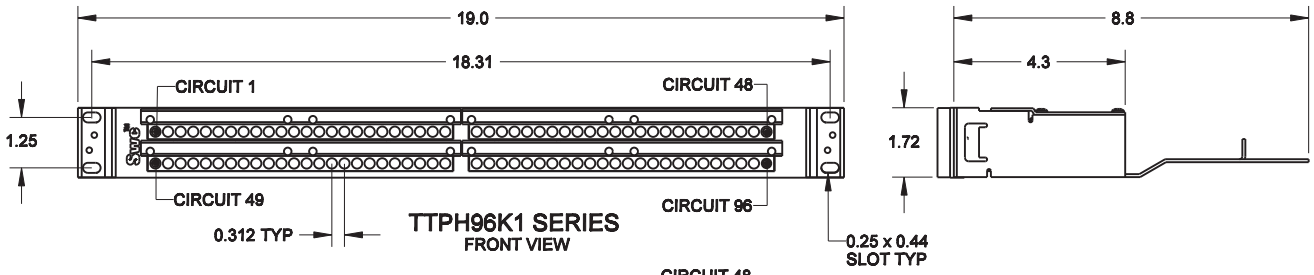


TTPH96K1 SERIES
FRONT VIEW

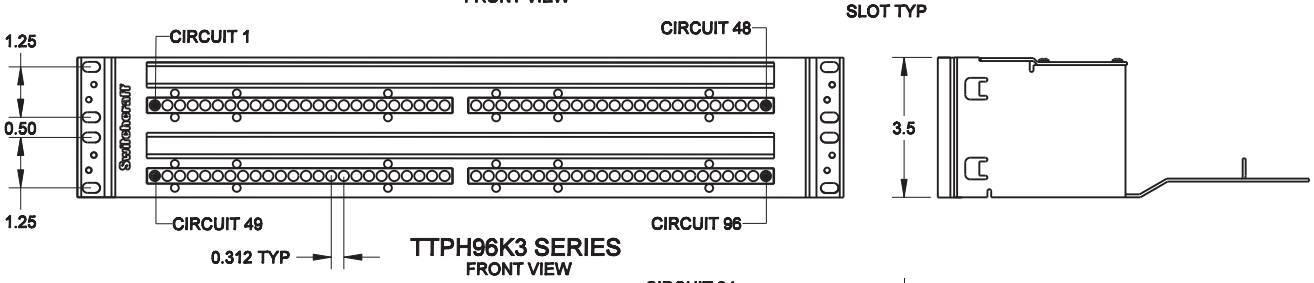


TTPH96K3 SERIES
FRONT VIEW

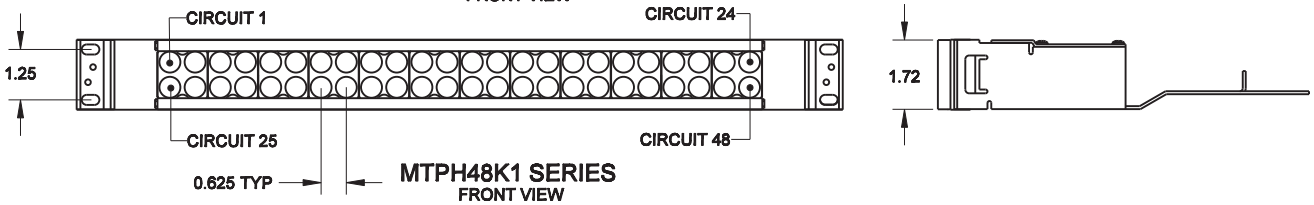


MTPH48K1 SERIES
FRONT VIEW

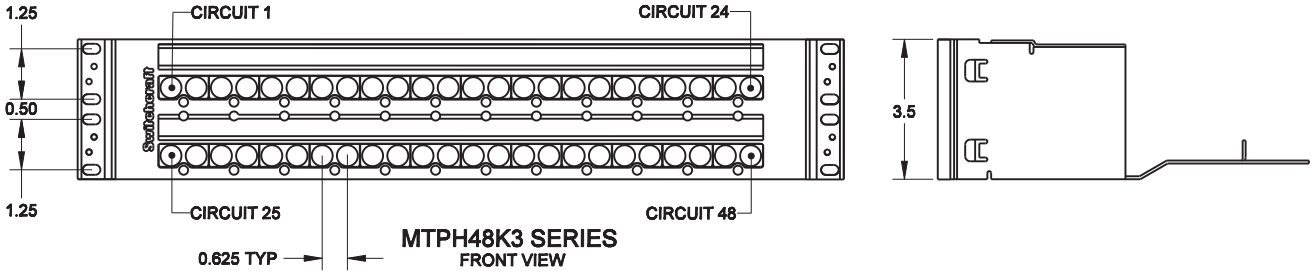


MTPH48K3 SERIES
FRONT VIEW

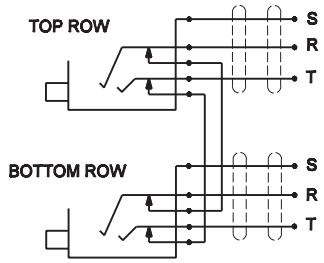


NORMALS AT JACKS

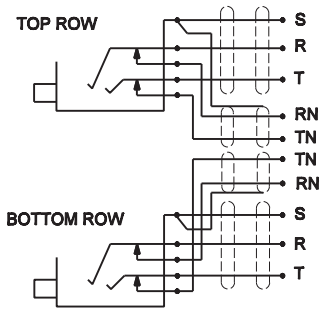


NORMALS OUT

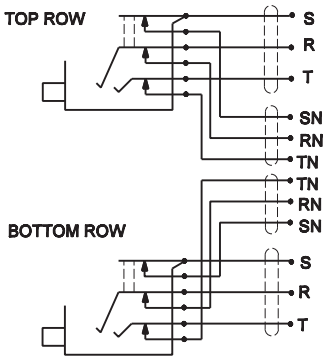


FULL SLEEVE NORMALS OUT

Switc

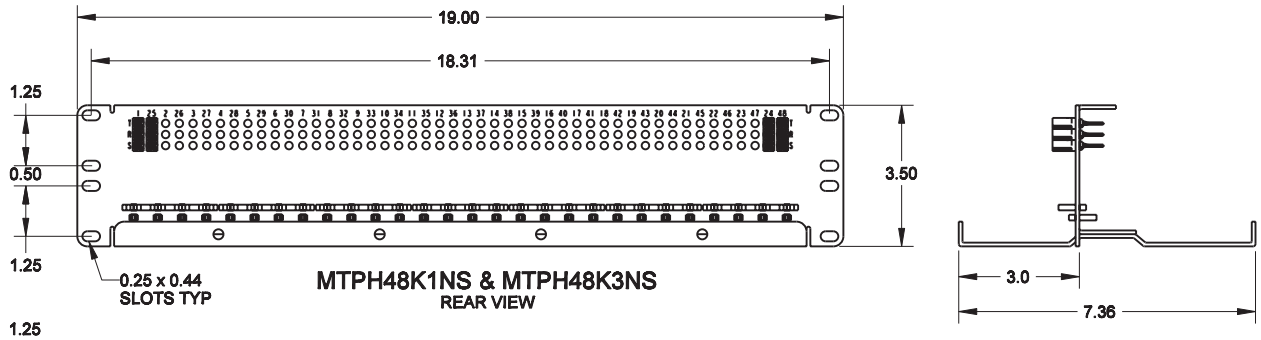


MTPH48K1NS & MTPH48K3NS
REAR VIEW

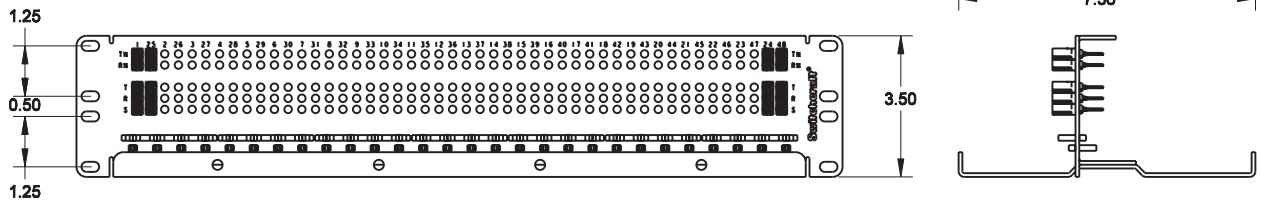


MTPH48K1NO & MTPHK3NO
REAR VIEW

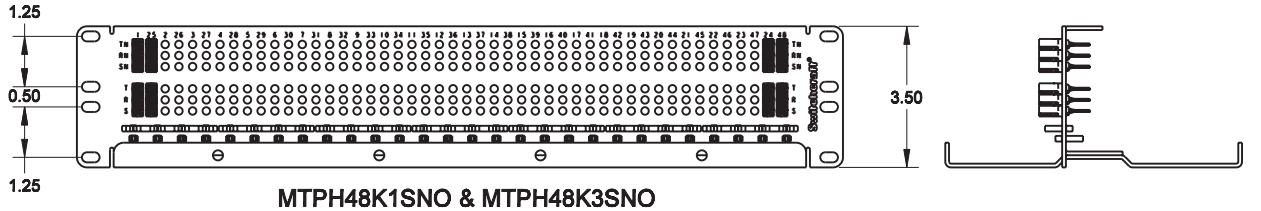


MTPH48K1SNO & MTPH48K3SNO
REAR VIEW

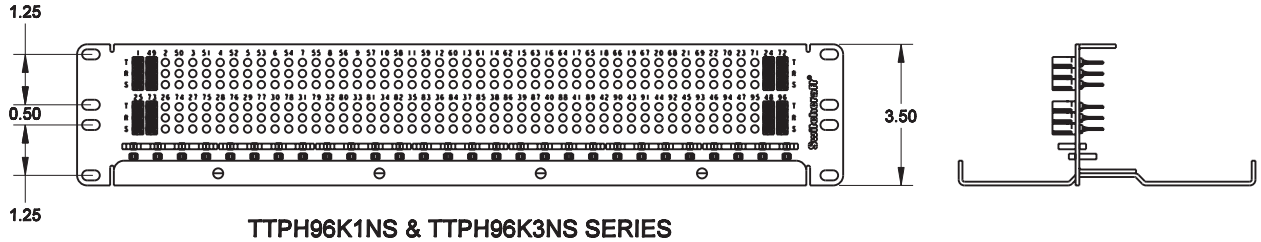


TTPH96K1NS & TTPH96K3NS SERIES
REAR VIEW

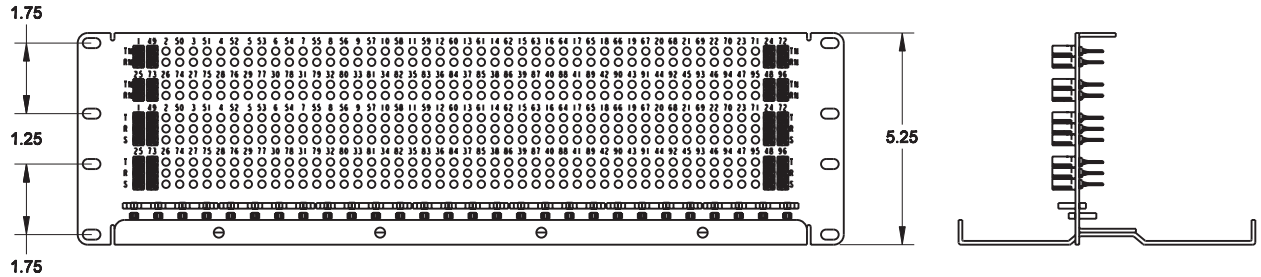


TTPH96K1NO & TTPH96K3NO SERIES
REAR VIEW

DIMENSIONS ARE FOR REFERENCE ONLY Inch (mm)

Switchcraft®
www.switchcraft.com
5555 North Elston Avenue / Chicago, IL 60630
Phone: 773-792-2700 / Fax: 773-792-2129

# Front Access Series

## Features and Benefits

- Easy slide-out tray slides forward for easy re-termination from the front of the rack
- Available with either 48 MT style or 96 TT style jacks in a 1RU space
- Attractive, corrosion resistant nickel-plated, steel frame jacks
- Gold-plated switching contacts reduce contact resistance, improves reliability
- Extra wide designation strips for easy channel identification
- Rugged, attractive black epoxy-finished steel chassis
- Configurations available include normals strapped and normals brought out

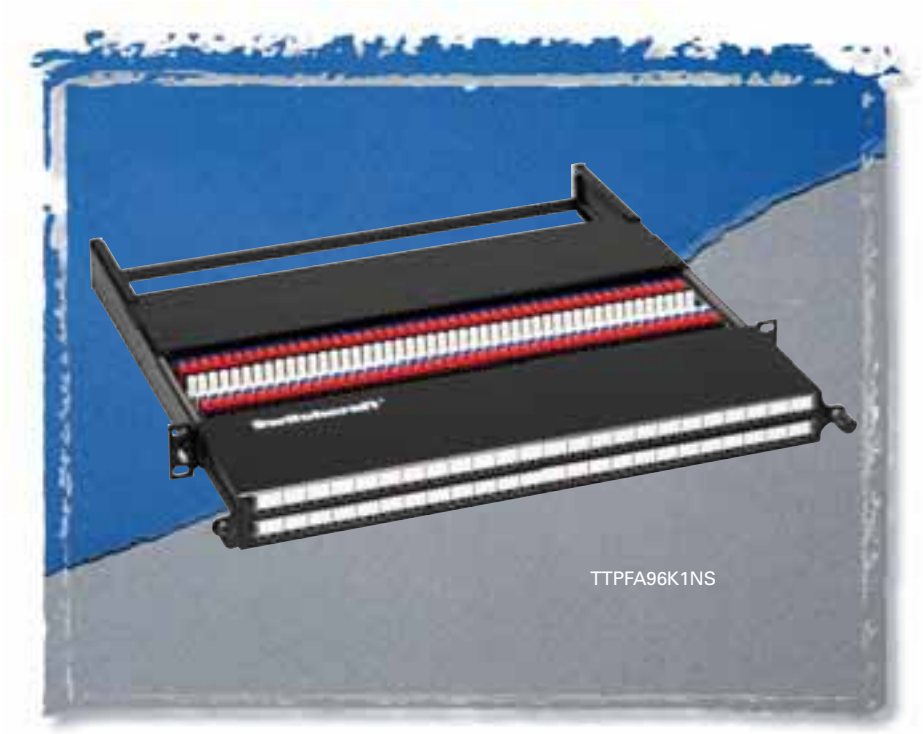


**The Front Access Series offers the end user the ease of re-terminating patchpoints from the front of the rack as opposed to the back. A slide out tray allows the user to slide out the punchdown terminals and reconfigure the unit. An easy release mechanism on either side of the unit allows it to be pushed back into place and easy to grip locking nuts tighten the unit in place.**

## Specifications

### Materials

Jacks
- Frame: Nickel-plated steel
- Bushing: Nickel-plated brass
- Tip, Ring and Shunt Springs: Nickel silver with welded contacts
- Assembly Screws: Nickel-plated steel
- Welded Contacts: Gold alloy

Panel
- Frame: C.R.S. black epoxy painted
- Designation Strips: Black polycarbonate 94V-0
- Designation Strip Covers: Clear polycarbonate
- Jack Inserts: Thermoplastic 94V-0

### Mechanical

- Life: 30,000 cycles
- Insertion Force: 7 lbs. maximum
- Withdrawal Force: 1 lb. minimum
- Operating: -20˚C to +65˚C

### Electrical

- Jack Contact Resistance: 30 milliohms initial maximum; 50 milliohms after life
- Jack Insulation Resistance: 10,000 megohms maximum
- Dielectric Withstanding Voltage: 500V at 60 Hz AC
- Working Voltage: 100 milliamps or less; maximum 56.5 VDC

## Ordering Information

| Part Number | Type of Jack | No. of Jacks | Description |
|---|---|---|---|
| TTPFA96K1NS | TT | 96 | 1.75" High, normals strapped |
| TTPFA96K1NO | TT | 96 | 1.75" High, normals brought out |
| MTPFA48K1NS | MT | 48 | 1.75" High, normals strapped |
| MTPFA48K1NO | MT | 48 | 1.75" High, normals brought out |

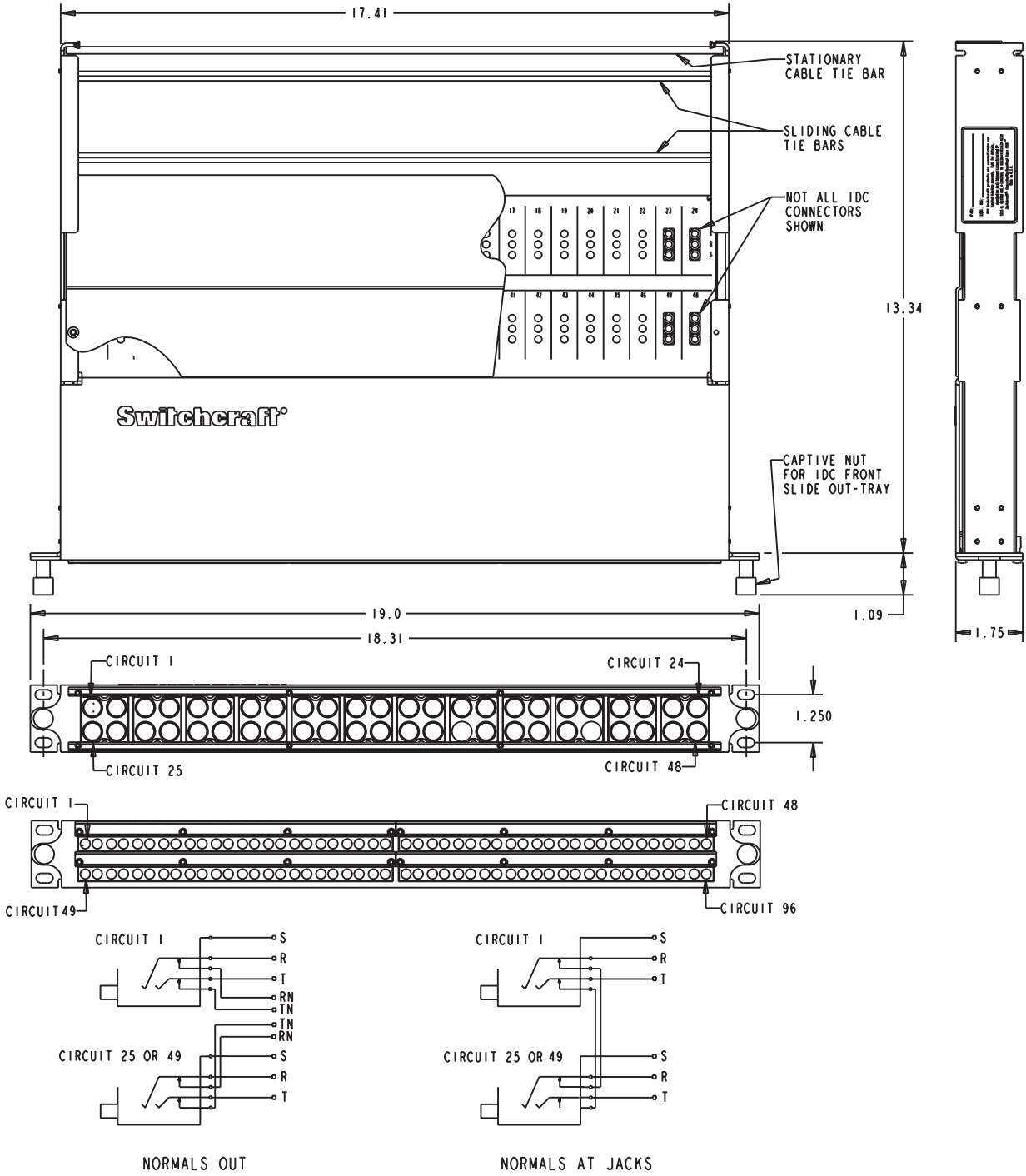


DIMENSIONS ARE FOR REFERENCE ONLY Inch (mm)

Switchcraft®
www.switchcraft.com
5555 North Elston Avenue / Chicago, IL 60630
Phone: 773-792-2700 / Fax: 773-792-2129

# EZ Norm Patchbay Series

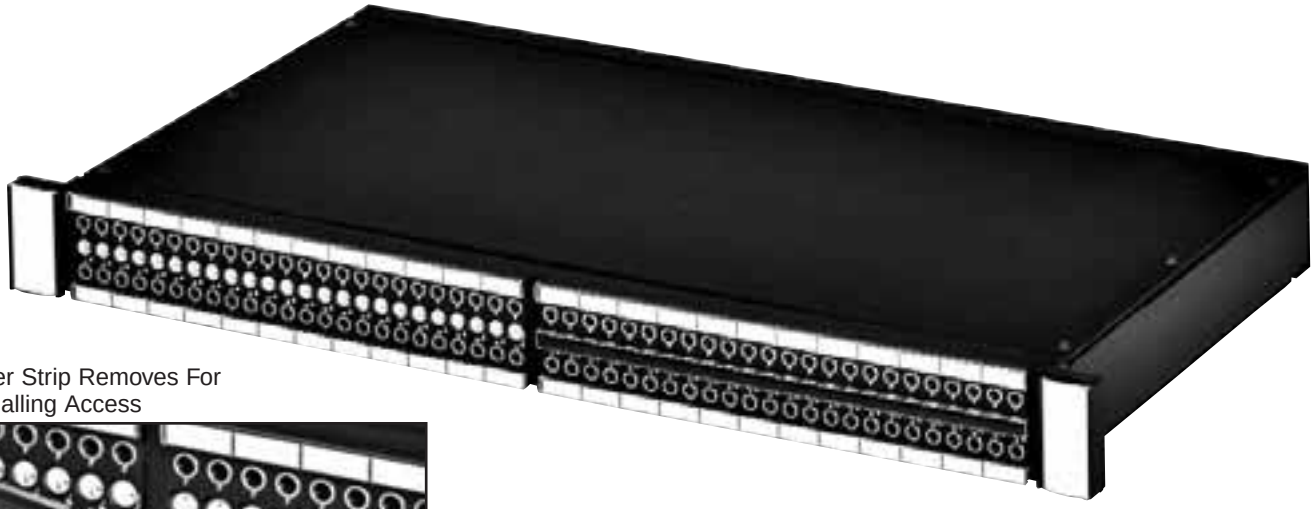

Center Strip Removes For Normalling Access

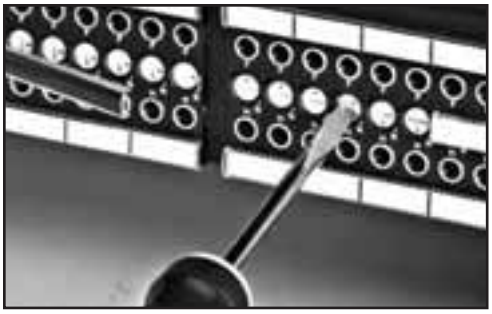

Easily Normal The Jacks By Rotating To “Full”, “Non,” Or “Half” Positions

**The EZ Norm offers a simplified method for setting up and changing normals to a Bantam/TT patchbay. Simply remove the middle designation strip, and rotate the center cam, using a standard screwdriver. An audible “click” can be heard as you rotate from full normals to no normals to half normals. An opaque marking strip is included to conceal the normal position, if needed.**

## Specifications

### Materials

Jacks
- Housing & Cover: 94V-0 rated thermoplastic
- Sleeve Collar: Nickel plated copper alloy
- Tip, Ring, Shunt, & Sleeve Springs: Nickel Silver with welded contacts
- Welded Contacts: Gold
- Cam Switching Springs: Silver plated copper alloy
- Cam Switching Contacts: Silver plated copper alloy

### Mechanical

- Jack Mechanical Life: 30,000 cycles
- Cam Contact Mechanical Life: 30,000 cycles
- Insertion - Withdrawal Forces: 1 - 4 lbs.
- Moisture resistance: MIL-STD 202 Method 106
- Thermal shock: MIL-STD 202 Method 107
- Salt spray: MIL-STD Method 101 (48 hrs.)
- Vibration: MIL-STD 202 Method 213

### Electrical

- Jack Spring Contact Resistance: 30 milliohm Maximum
- Cam Switch Contact Resistance: 30 milliohm Maximum
- Insulation Resistance: 10,000 Megaohms
- Dielectric Withstanding Voltage: 500 VAC (rms) at 60 Hz
- Insertion Loss: -0.5dB up to 10 MHz

### EZ Norm Patchbay Options

- 1RU can be terminated to EDAC or Cannon DL, solder terminals, or wire-wrap terminals
- 1.5RU can be terminated to EDAC/Cannon DL, solder terminals, wire-wrap terminals, plus 3 pin connectors, or our own PPT Professional Punchdown Terminal
- 2RU Same as above
- All units will be offered with or w/o docking connector
- Unwired units will be offered with either cable tie bar or cable tray

## Racks

The EZ Norm comes in 3 different rack heights, 1RU, 1.5RU, and 2 RU.

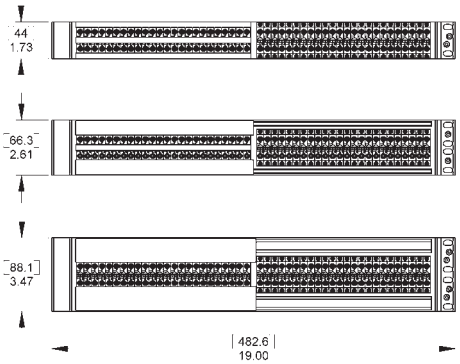


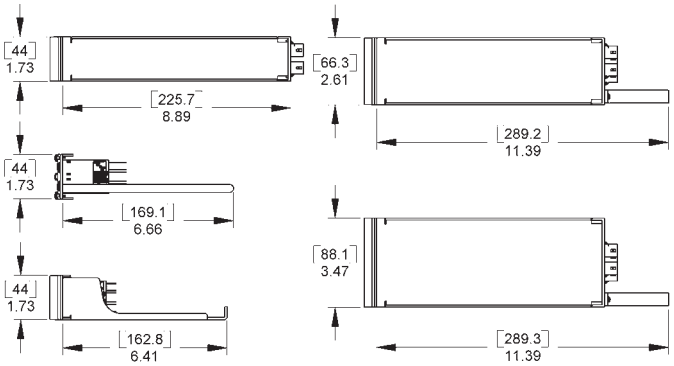


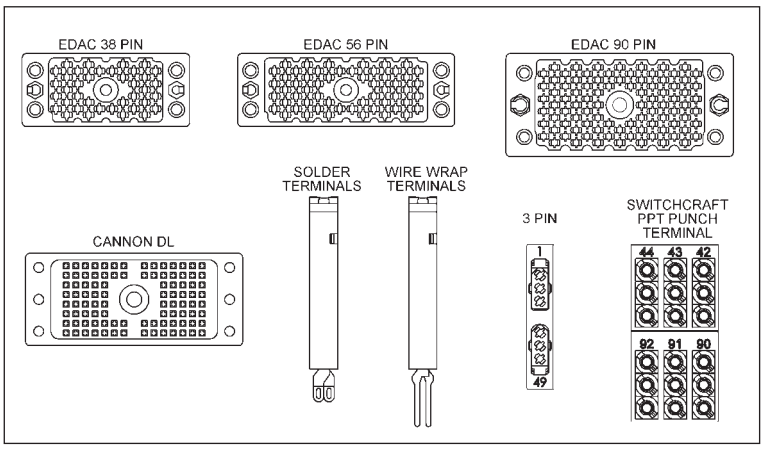


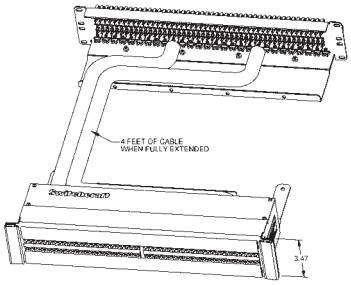


## Harness Assembly

The EZ Norm is also offered as a harness assembly, with a standard harness of 4 ft. Custom lengths are available, call Switchcraft® for details.

| | | | | | | | | | |
|---|---|---|---|---|---|---|---|---|---|
| TT | EZN | _ | 10 | _ | _ | E90 | IDC | SL | _ |
| | | H | 15 | P | D | E56 | 3PIN | CDL | T |
| | | | 20 | | | E38 | WW | FA | B |
| TT SIZE JACKS | EZ-NORM CAM JACKS | REGULAR UNIT HARNESS UNIT (UMBILICAL) | 1 RACK UNIT HEIGHT 1.5 RACK UNIT HEIGHT 2 RACK UNIT HEIGHT | UNWIRED PRE WIRED | NO DOCKING DOCKING CONNECTOR | EDAC/ELCO 90 PIN CONNECTOR EDAC/ELCO 56 PIN CONNECTOR EDAC/ELCO 38 PIN CONNECTOR IDC PPT TERMINALS 3 PIN CONNECTORS WIRE WRAP PINS SOLDER LUGS CANNON DL 96 PIN CONNECTORS FRONT ACCESS WITH PPT | | | UNWIRED ONLY NO REAR SUPPORT CABLE TRAY CABLE BAR |

## Front Access

The Front Access option offers a slide-out tray, allowing the end user to re-terminate the patch-bay from the front of the rack.

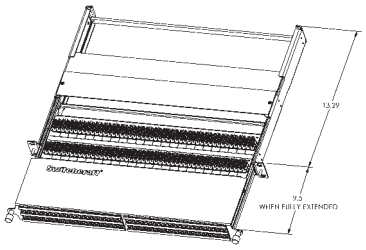


DIMENSIONS ARE FOR REFERENCE ONLY Inch (mm)

Switchcraft®
www.switchcraft.com
5555 North Elston Avenue / Chicago, IL 60630
Phone: 773-792-2700 / Fax: 773-792-2129

# RS 422 Data Patchbay Series

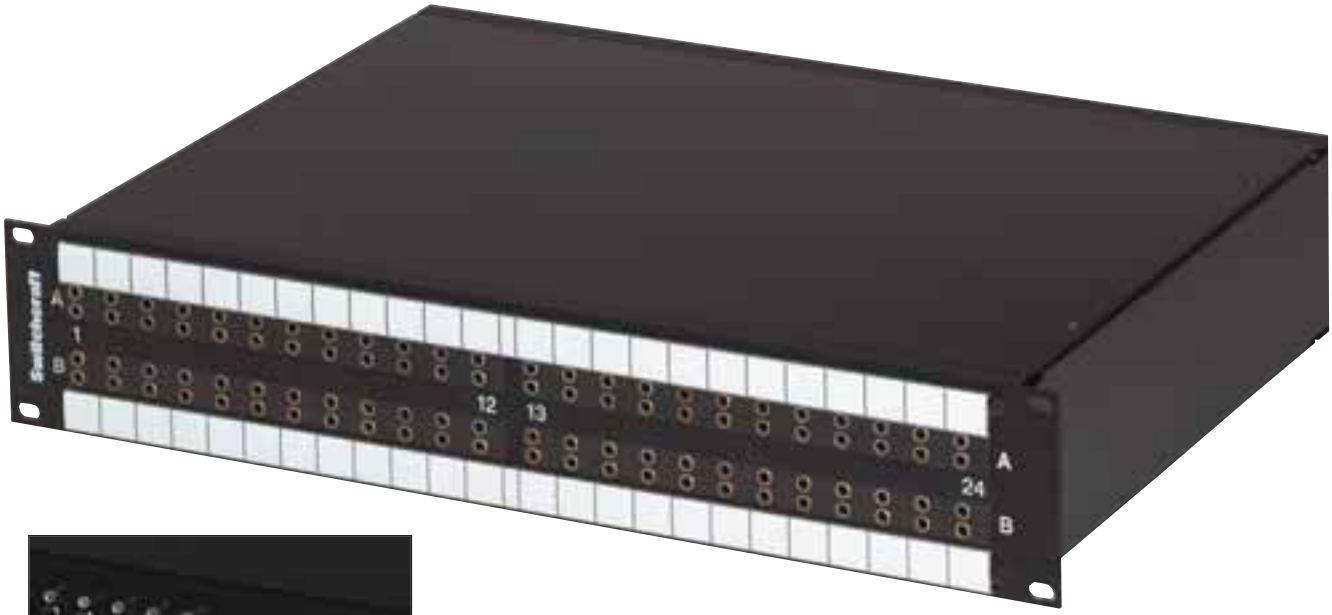


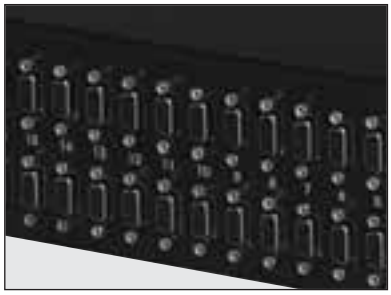

**Our standard RS data jackfield series offer a multiple combination of ports, rack heights, and back panel terminations which will easily fit into any television broadcast or video production where custom data patching is required. Custom ports and rack height combinations can be supplied. Contact the factory for details.**

## Ordering Information

| Part Number* | No. of Jacks | Front Panel Layout | Back Plane | Rack Height |
|---|---|---|---|---|
| RS422H4N081 | 2 x 8 | Horizontal | 9 Pin D-Sub | 1 |
| RS422V4N081 | 2 x 8 | Vertical | 9 Pin D-Sub | 1 |
| RS422H4N161 | 2 x 16 | Horizontal | 9 Pin D-Sub | 1 |
| RS422H4N162 | 2 x 16 | Horizontal | 9 Pin D-Sub | 2 |
| RS422V4N161 | 2 x 16 | Vertical | 9 Pin D-Sub | 1 |
| RS422V4N162 | 2 x 16 | Vertical | 9 Pin D-Sub | 2 |
| RS422H4N242 | 2 x 24 | Horizontal | 9 Pin D-Sub | 2 |
| RS422V4N242 | 2 x 24 | Vertical | 9 Pin D-Sub | 2 |
| RS422V4N322 | 2 x 32 | Vertical | 9 Pin D-Sub | 2 |

*Add "N" for non-normalled version

## Features and Benefits

- Unit Features either 8,16, 24, or 32 TT style jacks on the front Panels, to a 9 pin D-Sub.
- All versions utilize low capacitance internal wiring for maximum performance of transferring data
- All standard units are available 1 or 2 rack units high (1.5 RU available by request)
- Rugged, attractive black epoxy finished steel frame chassis

## Specifications

### Electrical

**Internal Wiring:**
24 AWG Solid TC, foils shield
**Nom Capacitance:** 11.5 pF/ft between conductors
21.3 pF/ft between one conductor and conductor connected to the shield
**Nom. Impedence:** 110 Ohms

# RS 422 Data Patchbay Series



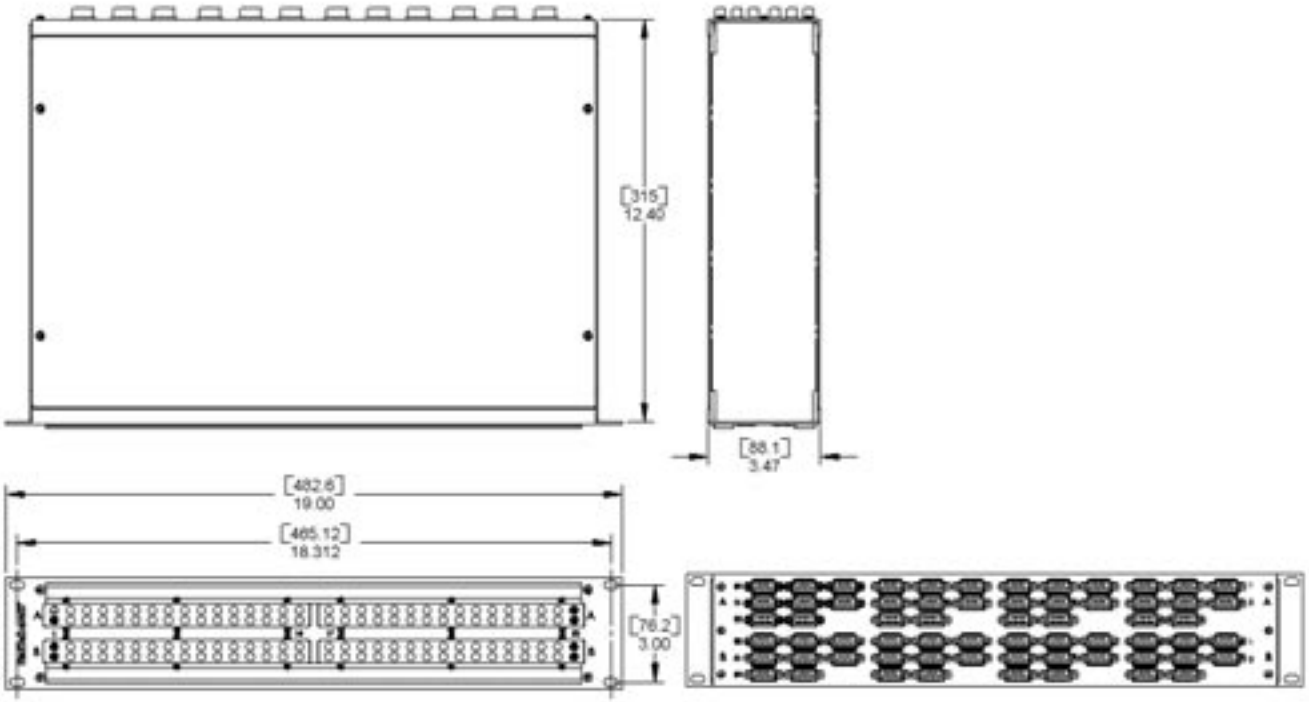


RS422V4N322
32 Vertical Paired Jacks
Front and Back Views

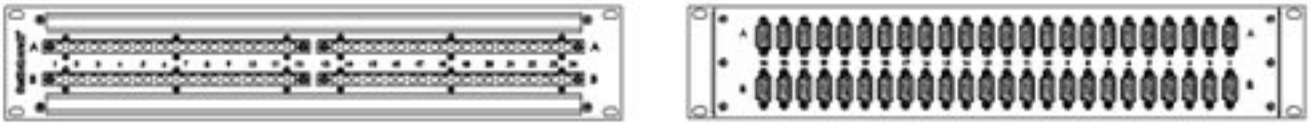

RS422H4N242
24 Horizontal Paired Jacks
Front and Back Views

DIMENSIONS ARE FOR REFERENCE ONLY Inch (mm)

Switchcraft®
www.switchcraft.com
5555 North Elston Avenue / Chicago, IL 60630
Phone: 773-792-2700 / Fax: 773-792-2129

AES / EBU Digital Ready!



# MTP48K Wired Series

## Features and Benefits

- Unit features 48 MT style jacks in either 1RU (1.75" H) or 2RU (3.5" H) spaces
- All versions utilize AES/EBU wiring for complete digital compatibility
- Attractive, corrosion resistant nickel-plated, steel frame jacks
- Gold-plated switching contacts reduce contact resistance, improve reliability
- Rugged, attractive black epoxy-finished steel chassis
- Extra wide designation strips for easy channel identification
- 1RU version configurations include normals strapped and normals brought out
- 2RU version configurations include normals strapped, normals brought out, and sleeve normals brought out

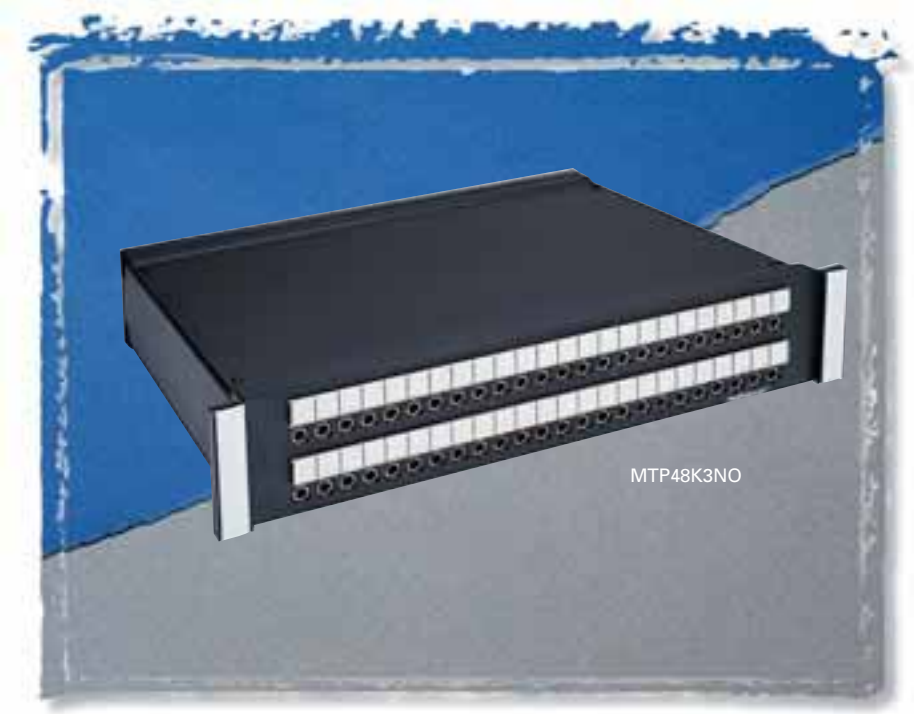


**The MTP Series was developed with the AES/EBU digital standard in mind. All versions are made with 110 Ohm cabling inside as a standard. Available in a wide variety of configurations.**

## Specifications

### Materials

Jacks
- Frame: Nickel-plated steel
- Bushing: Nickel-plated brass
- Tip, Ring and Shunt Springs: Nickel silver with welded contacts
- Assembly Screws: Zinc-plated steel
- Welded Contacts: Gold alloy

Panel
- Front Channel: Black anodized aluminum
- Frame: C.R.S. black epoxy painted
- Designation Strips: Black polycarbonate 94V-0
- Designation Strip Covers: Clear polycarbonate
- Jack Inserts: Thermoplastic polyester

### Mechanical

- Life: 30,000 cycles
- Insertion Force: 7 lbs. maximum
- Withdrawal Force: 1 lb. minimum
- Environmental: O˚C to +50˚C

### Electrical

- Contact Resistance: 30 milliohms maximum initial
- Insulation Resistance: 10,000 megohms maximum
- Dielectric Withstanding Voltage: 500 VAC at 60 Hz
- Working Voltage: 140 VDC maximum
- Current Rating: 100 milliamps

## Ordering Information

| Part Number | Type of Jack | No. of Jacks | Description |
|---|---|---|---|
| MTP48K1NS | MT | 48 | 1.75" High, normals strapped |
| MTP48K3NS | MT | 48 | 3.5" High, normals strapped |
| MTP48K1NO | MT | 48 | 1.75" High, normals brought out |
| MTP48K3NO | MT | 48 | 3.5" High, normals brought out |
| MTP48K3SNO | MT | 48 | 3.5" High, sleeve normals out |

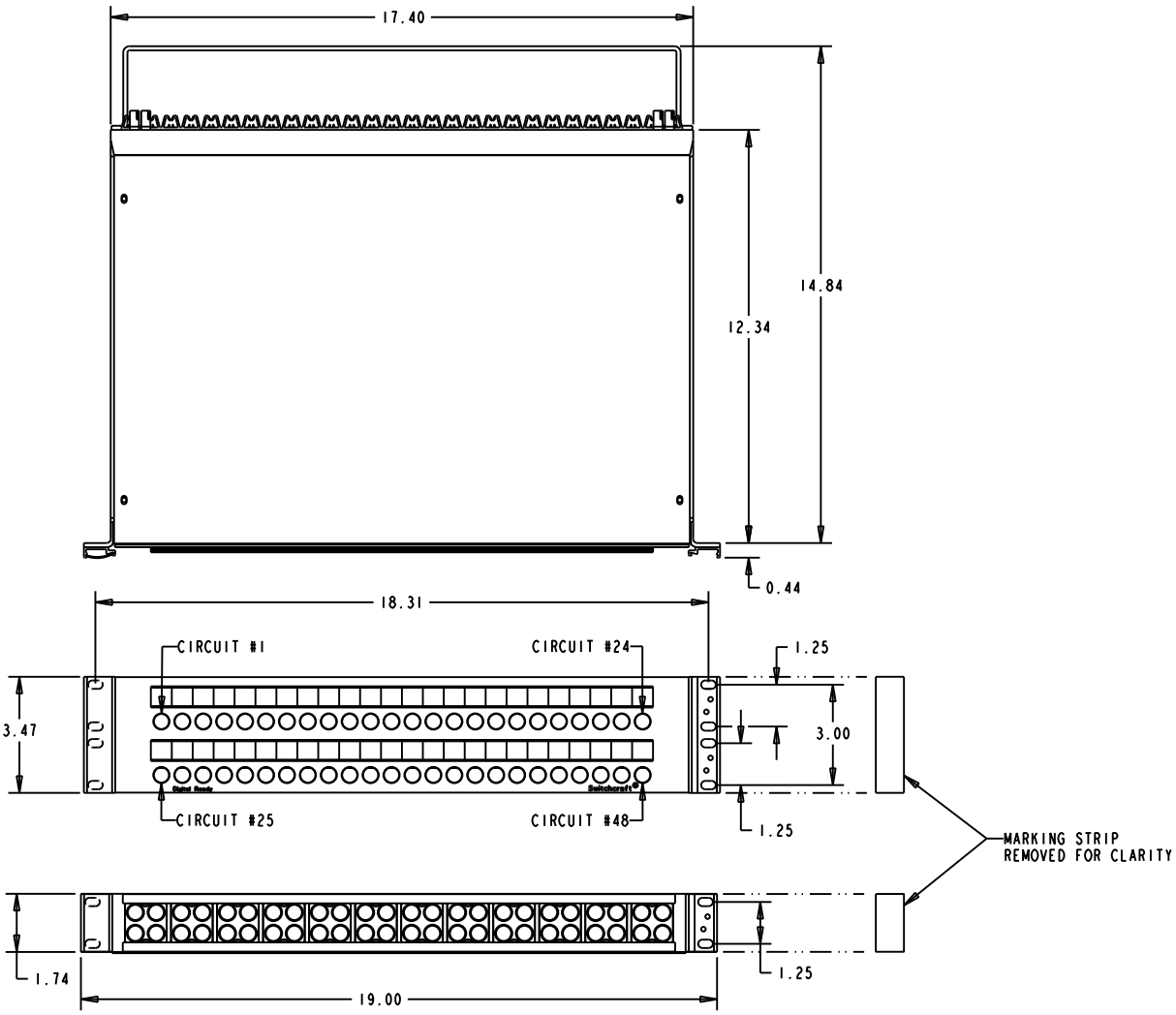


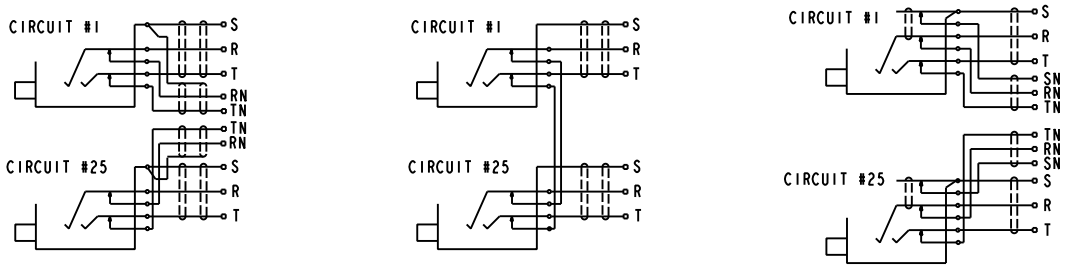


DIMENSIONS ARE FOR REFERENCE ONLY Inch (mm)

Switchcraft®
www.switchcraft.com
5555 North Elston Avenue / Chicago, IL 60630
Phone: 773-792-2700 / Fax: 773-792-2129

AES / EBU
Digital Ready!



# TTPW96K Wired Series

## Features and Benefits

- Unit features 96 TT style jacks in 2RU (3.5"H) space
- Utilizes AES/EBU wiring for complete digital compatibility
- Attractive, corrosion resistant nickel-plated, steel frame jacks
- Gold-plated switching contacts reduce contact resistance, improve reliability
- Rugged, attractive black epoxy-finished steel chassis
- Extra wide designation strips for easy channel identification

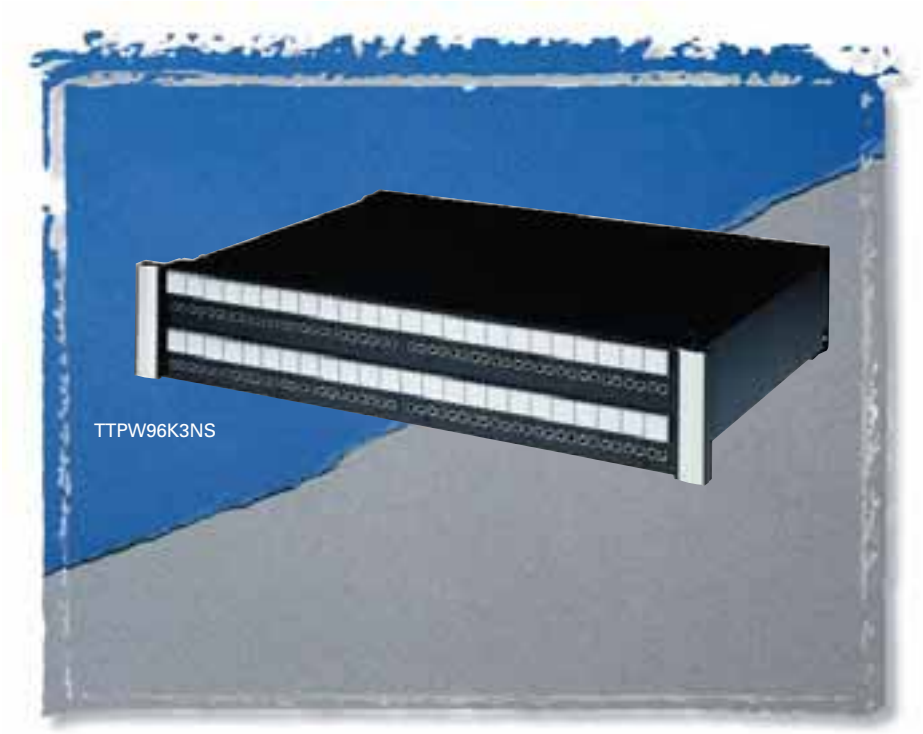


**The TTPW96K Series was developed with the AES/EBU digital standard in mind. As a standard, the TTPW96K utilizes 110 Ohm cabling inside.**

## Specifications

### Materials

Jacks
- Frame: Nickel-plated steel
- Bushing: Nickel-plated brass
- Tip, Ring and Shunt Springs: Nickel silver with welded contacts
- Assembly Screws: Zinc-plated steel
- Welded Contacts: Gold alloy

Panel
- Front Channel: Black anodized aluminum
- Frame: C.R.S. black epoxy painted
- Designation Strips: Black polycarbonate 94V-0
- Designation Strip Covers: Clear polycarbonate
- Jack Inserts: Thermoplastic polyester

### Mechanical

- Life: 30,000 cycles
- Insertion Force: 7 lbs. maximum
- Withdrawal Force: 1 lb. minimum
- Environmental: 0˚C to +50˚C

### Electrical

- Contact Resistance: 30 milliohms maximum initial
- Insulation Resistance: 10,000 megohms maximum
- Dielectric Withstanding Voltage: 500 VAC at 60 Hz
- Working Voltage: 140 VDC maximum
- Current Rating: 100 milliamps

## Ordering Information

| Part Number | Type of Jack | No. of Jacks | Description |
|---|---|---|---|
| TTPW96K1NN | TT | 96 | 1.75" High, non-normals |
| TTPW96K1HN | TT | 96 | 1.75" High, half normals |
| TTPW96K1NS | TT | 96 | 1.75" High, normals strapped |
| TTPW96K3NN | TT | 96 | 3.5" High, non-normals |
| TTPW96K3HN | TT | 96 | 3.5" High, half normals |
| TTPW96K3NS | TT | 96 | 3.5" High, normals strapped |

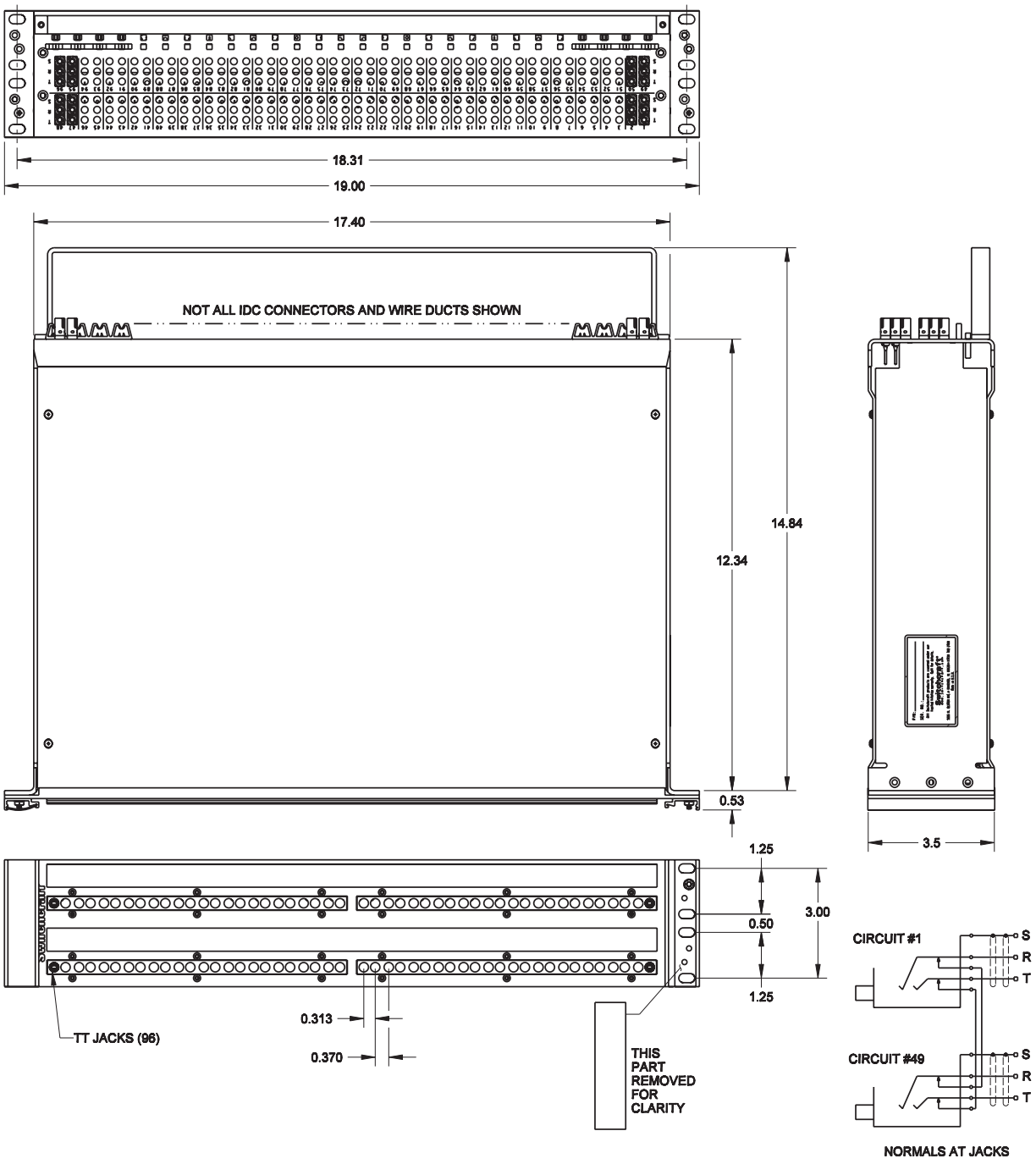


DIMENSIONS ARE FOR REFERENCE ONLY $\frac{\text{Inch}}{(\text{mm})}$

Switchcraft®
www.switchcraft.com
5555 North Elston Avenue / Chicago, IL 60630
Phone: 773-792-2700 / Fax: 773-792-2129

# MTPBP/TTPBP Backpanel Series

## Features and Benefits

- Allows for custom patchbay configurations or central patching points
- PPTs have IDCs on both sides for easy installation
- Rugged, attractive black epoxy-finished steel chassis
- Cable trays allow for mounting and securing terminated cable

## Specifications

Panel thickness: .093"
Mounting hole diameter: .187"
Mounting hole spacing (48 IDCs/row): .340" (Horizontal) x .275" (Vertical)
Mounting hole spacing (52 IDCs/row): .320" (Horizontal) x .275" (Vertical)
Wire size: #22, 24, 26 AWG Stranded or Solid (IDC termination)

### Materials

Housing: Thermoplastic (UL 94V-0)
Contacts: High strength copper alloy
Backpanels: Black Epoxy coated C.R.S.
Cable Tray: Black Epoxy coated C.R.S.

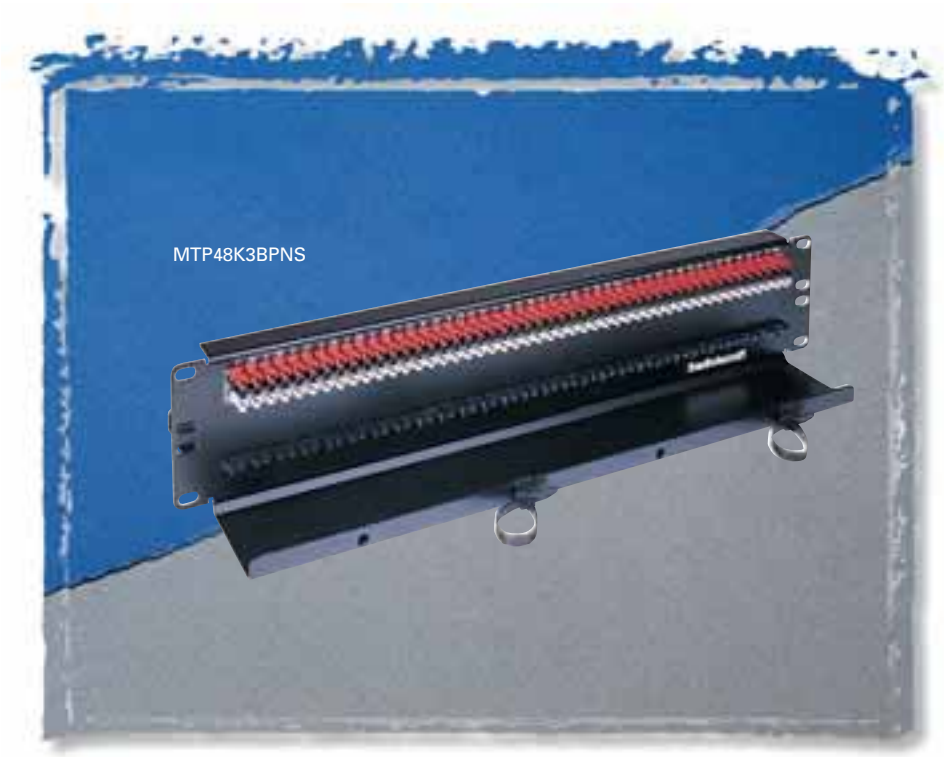


**The Backpanel Series offers the end user the flexibility of configuring their own patchbay, or to use as a central patchpoint location. The backpanels utilize the PPT punchdown and come with a rugged cable tray.**

## Ordering Information

| Part Number | Sets of PPT Terminals | Height | Description |
|---|---|---|---|
| MTP48K3BPNS | 48 | 3.5" | T, R, S |
| MTP48K3PBNO | 48 | 3.5" | T, R, S, TN, RN |
| MTP52K3BPNO | 52 | 3.5" | T, R, S, TN, RN |
| MTP24K7 | 24 x 2 | 7.0" | +, -, S |
| TTP96K3BPNS | 96 | 3.5" | T, R, S |
| TTP96K5BPNS | 96 x 2 | 5.25" | T, R, S, TN, RN |

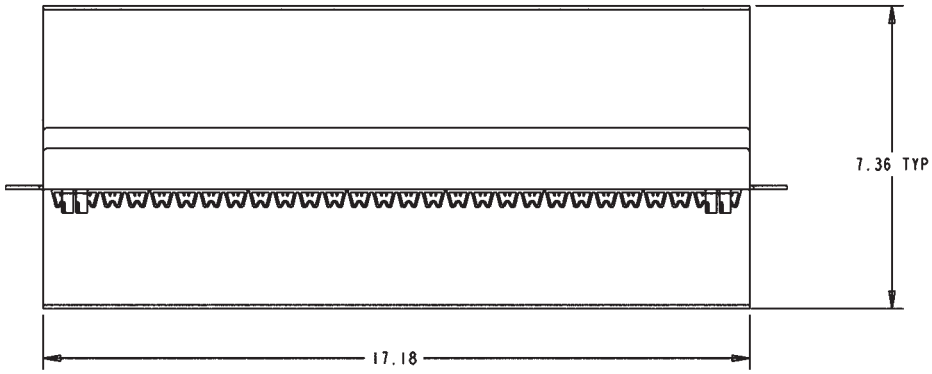


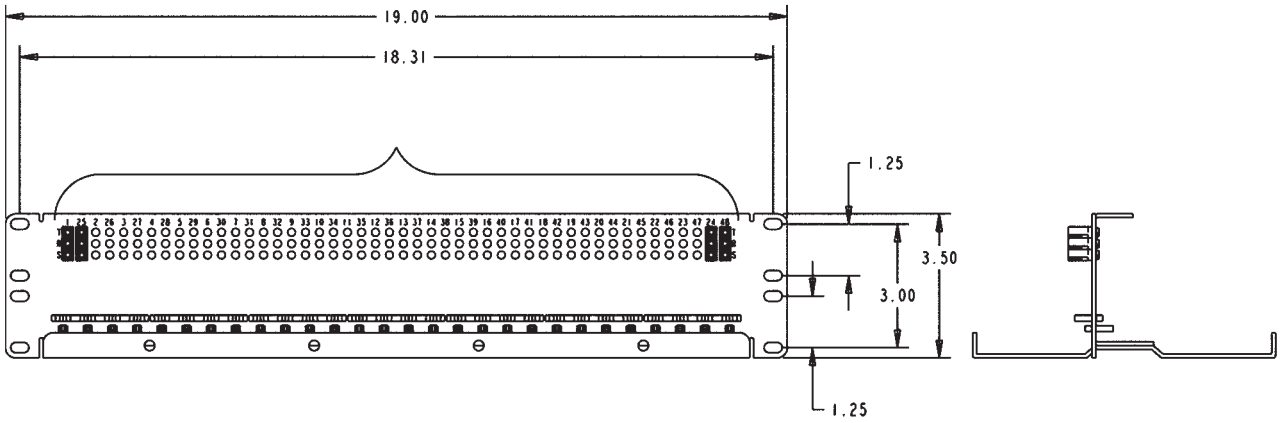


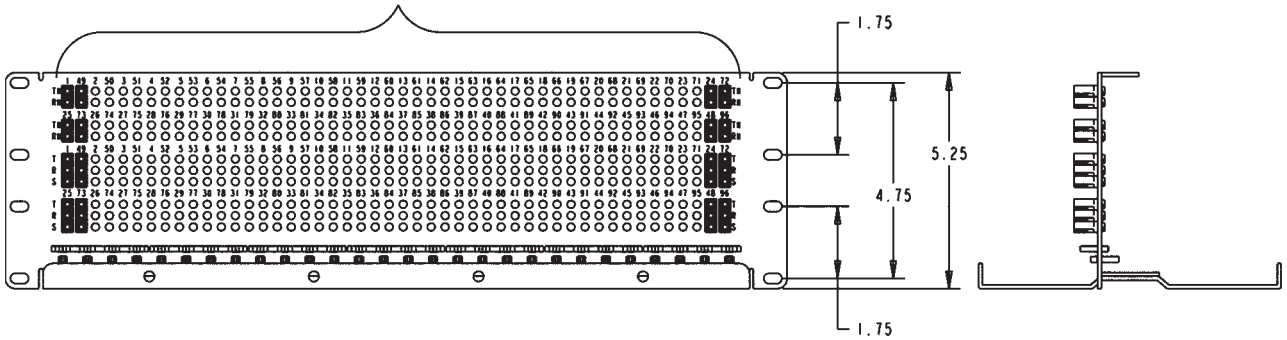


DIMENSIONS ARE FOR REFERENCE ONLY Inch (mm)

Switchcraft®
www.switchcraft.com
5555 North Elston Avenue / Chicago, IL 60630
Phone: 773-792-2700 / Fax: 773-792-2129

# TT96 EDAC Series

## Features and Benefits

- Attractive, corrosion-resistant, nickel-plated jacks
- Steel frame jacks for superior jack life
- Extra wide labeling strips provide maximum space and two vertical strips, one at each side
- Rugged, attractive black anodized aluminum face will not break
- Two configurations available:
  - Normals brought out
  - Normaled at jacks
- Gold switching contacts for long-term reliability
- Jacks paired for easy identification of left and right channels
- Connectorized by EDAC® connectors for ease of termination by customer

## Specifications

### Materials

Jacks
- Frame: Nickel-plated steel
- Bushing: Nickel-plated brass
- Tip, Ring and Shunt Springs: Nickel silver with welded contacts
- Assembly Screws: Zinc-plated steel
- Welded Contacts: Gold alloy

Panel
- Front Channel: Black anodized aluminum
- Frame & Cover: C.R.S. black epoxy painted
- Designation Strips: Black polycarbonate 94V-0
- Designation Strip Covers: Clear polycarbonate
- Jack Inserts: Polyester

EDAC Connector
- Housing: Thermoplastic, UL94V-0
- Contacts: Gold plated phosphor bronze

### Mechanical

- Life: 30,000 cycles
- Insertion Force: 7 lbs. maximum
- Withdrawal Force: 1 lb. minimum
- Operating: -20˚C to +65˚C

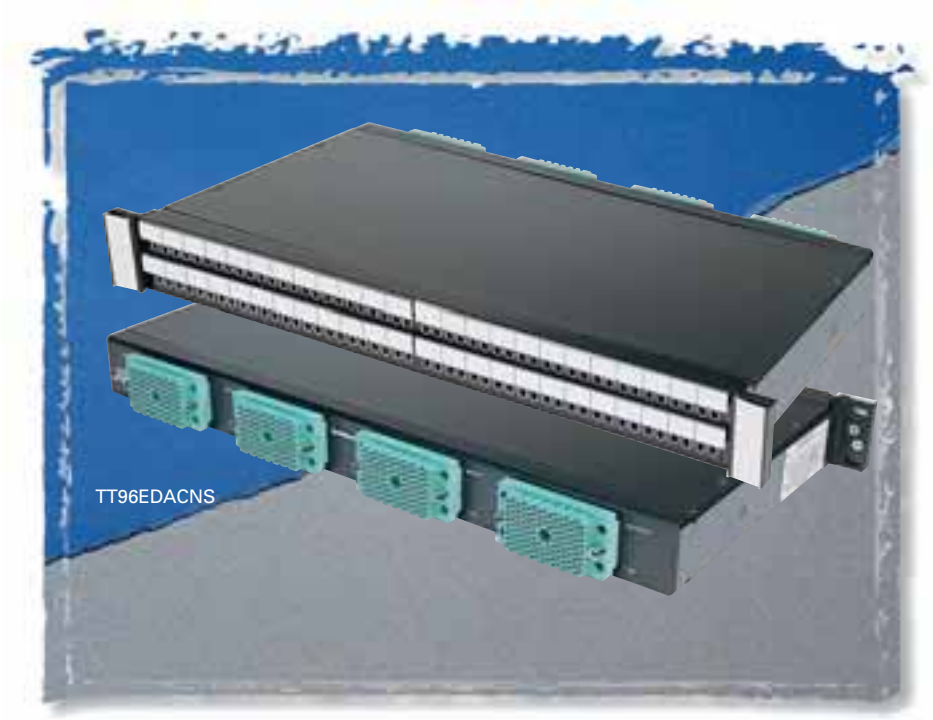


**The TT96EDAC Series offers the convenience of EDAC® connectors on the back of the panel for easy installation. Available in normals strapped and normals brought out, both wired to the SAC code of wiring. We also offer custom wiring configurations. Contact the factory for details.**

### Electrical

- Contact Resistance: 30 milliohms maximum initial
- Insulation Resistance: 10,000 megohms
- Dielectric Withstanding Voltage: 500VAC at 60 Hz
- Working Voltage: 140VDC
- Current Rating: 100 milliamps

## EDAC Mating Plugs

| Part Number | Description |
|---|---|
| 516-090-000-301 | 90 Pin male w/ screw |
| 516-090-000-302 | 90 Pin male w/ nut |
| 516-120-000-101 | 120 Pin male w/ screw |
| 516-120-000-102 | 120 Pin male w/ nut |
| 516-290-500 | Terminal solder-style |
| 516-290-590 | Terminal crimp-style |

## Ordering Information

| Part Number | Type of Jack | No. of Jacks | Description |
|---|---|---|---|
| TT96EDACNO | TT | 96 | Normals Brought Out (120 pin EDAC) |
| TT96EDACNS | TT | 96 | Normals Strapped (90 pin EDAC) |

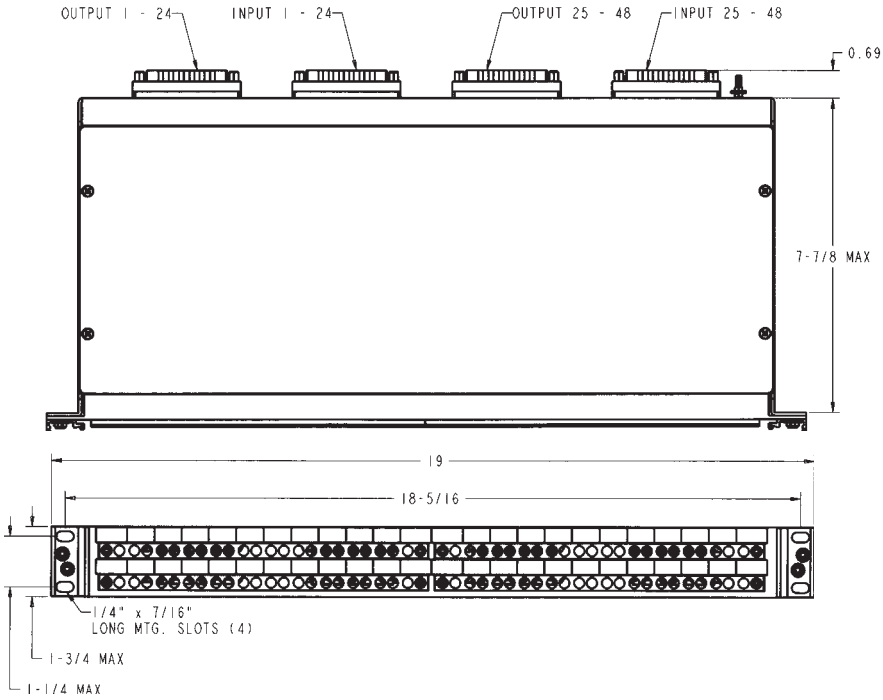


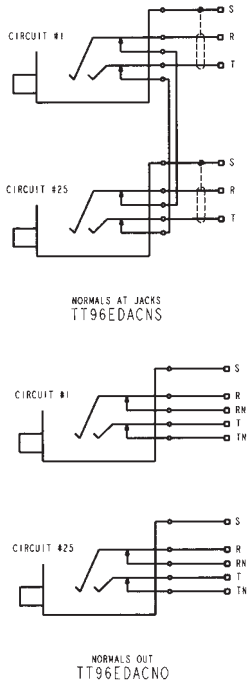


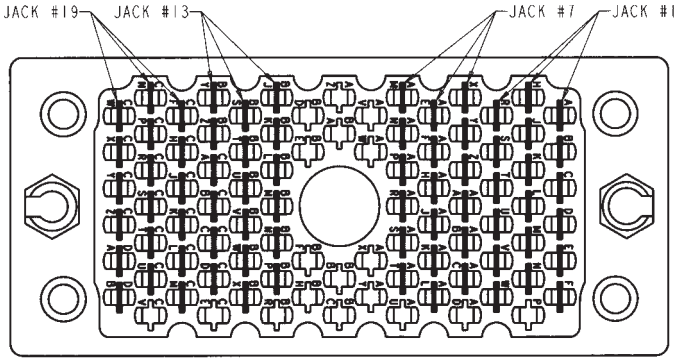


Standard Audio Configuration Wiring (S.A.C.)
90 Pin Plug Connector
(Normals at jacks)

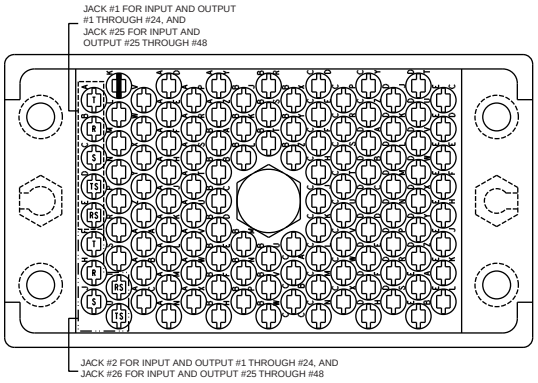


Standard Audio Configuration Wiring (S.A.C.)
120 Pin Plug Connector
(Normals brought out)

| 90 PIN CONNECTOR PIN-OUT | | | |
|---|---|---|---|
| JACK No. | TIP | RING | SLEEVE |
| 1 | A | H | R |
| JACKS #2 THRU #6 PATTERN CONTINUES TO F,N,W | | | |
| 7 | X | AE | AM |
| JACKS #8 THRU #12 PATTERN CONTINUES TO AC,AL,AT | | | |
| 13 | BJ | BS | BY |
| JACKS #14 THRU #18 PATTERN CONTINUES TO BP,BX,CD | | | |
| 19 | CF | CN | CW |
| JACKS #20 THRU #24 PATTERN CONTINUES TO CM,CU,DB | | | |

| 120 PIN CONNECTOR PIN-OUT | | | | | |
|---|---|---|---|---|---|
| JACK No. | TIP | RING | SLEEVE | TIP SHUNT | RING SHUNT |
| 1 | A | B | C | D | E |
| JACKS #2 THRU #6 PATTERN CONTINUES TO AN, AM, AL, AK, AJ | | | | | |
| 7 | AH | AF | AE | AD | AP |
| JACKS #8 THRU #12 PATTERN CONTINUES TO BN, BP, BW, BV, BU | | | | | |
| 13 | BT | BS | BR | BX | BY |
| JACKS #14 THRU #18 PATTERN CONTINUES TO CX, DH, DF, DE, DD | | | | | |
| 19 | DC | DB | DA | CZ | CY |
| JACKS #20 THRU #24 PATTERN CONTINUES TO EF, EH, EJ, EK, EL | | | | | |

DIMENSIONS ARE FOR REFERENCE ONLY Inch (mm)

Switchcraft®
www.switchcraft.com
5555 North Elston Avenue / Chicago, IL 60630
Phone: 773-792-2700 / Fax: 773-792-2129

# TTP96K Patchkit Series

## Features and Benefits

- Kit features 96 TT jacks in one rack space (1.75" high) or two rack spaces (3.5" high)
- Jack blocks can be removed from the front for easy soldering
- Dust tray limits dirt, dust and contamination of jack terminals
- Wire management straps are adjustable and reusable
- Attractive, corrosion resistant nickel-plated jacks
- Steel frame jack for superior jack life
- Extra wide labeling strips provide maximum space
- Rugged, attractive black anodized aluminum face will not break or rust
- Three jack configurations available for the exact switching arrangement you need: full normal, half normal, and non-normal (open circuit)
- Fanned solder terminals for easier solder connections
- Gold switching contacts for long-term reliability in normal-through connections

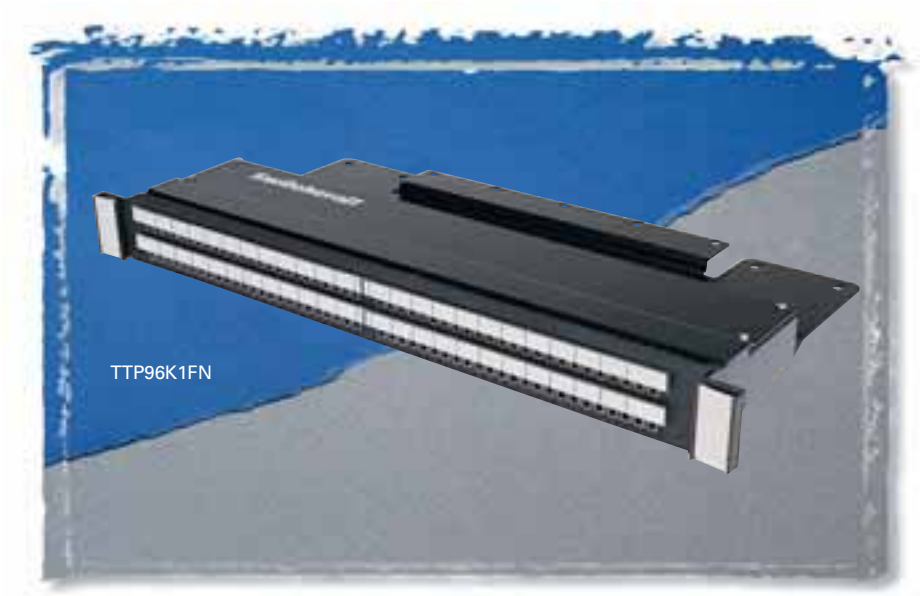


**The TTP96K Patchkit Series offers the end user a rugged cable tray to support rear cabling. Heavy duty construction takes weight off the back of the jacks for increased reliability. Available in 1.75" or 3.5" height versions.**

## Specifications

### Materials

Jacks
- Frame: Nickel-plated steel
- Bushing: Nickel-plated brass
- Tip, Ring and Shunt Springs: Nickel silver with welded contacts
- Assembly Screws: Nickel-plated steel
- Welded Contacts: Gold alloy

Panel
- Front Channel: Black anodized aluminum
- Frame: C.R.S. black epoxy painted
- Designation Strips: Black polycarbonate 94V-0
- Designation Strip Covers: Clear polycarbonate
- Jack Inserts: Thermoplastic polyester

### Mechanical

Life: 30,000 cycles
Insertion Force: 7 lbs. maximum
Withdrawal Force: 1 lb. minimum
Environmental: 0˚C to +50˚C

### Electrical

Contact Resistance: 30 milliohms maximum initial
Insulation Resistance: 10,000 megohms maximum
Dielectric Withstanding Voltage: 500VAC at 60 Hz
Working Voltage: 140VDC maximum
Current Rating: 100 milliamps

## Ordering Information

| Part Number | Type of Jack | No. of Jacks | Description |
|---|---|---|---|
| TTP96K1FN | TT | 96 | 1.75" High, full normals |
| TTP96K1HN | TT | 96 | 1.75" High, half normal |
| TTP96K1NN | TT | 96 | 1.75" High, no normals |
| TTP96K3FN | TT | 96 | 3.5" High, full normals |
| TTP96K3HN | TT | 96 | 3.5" High, half normals |
| TTP96K3NN | TT | 96 | 3.5" High, no normals |

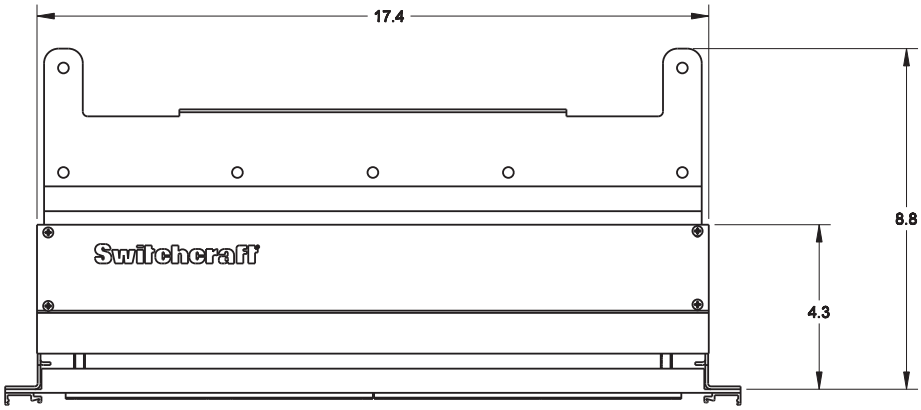


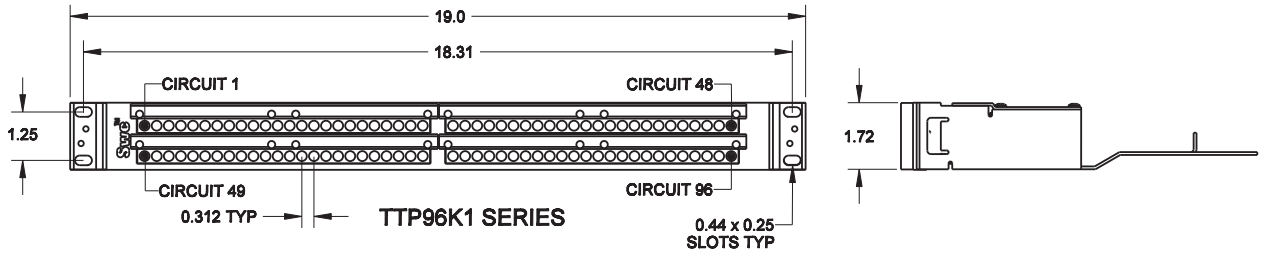


TTP96K1 SERIES

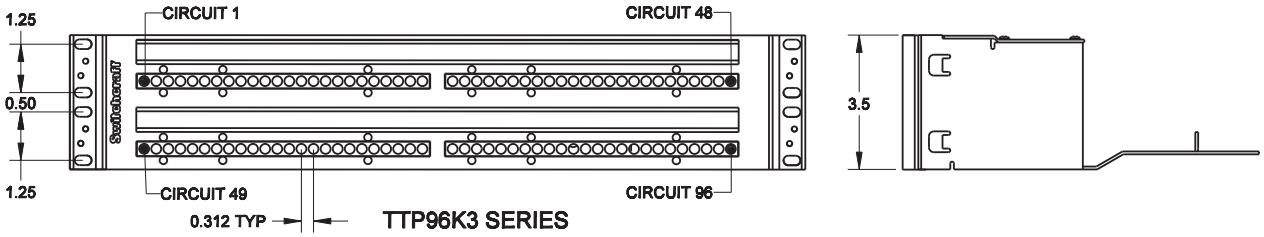


TTP96K3 SERIES

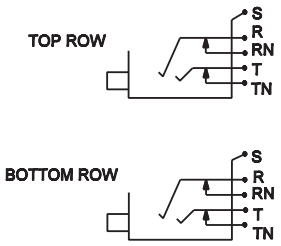


FULL NORMAL

TTP96K1FN
TTP96K3FN

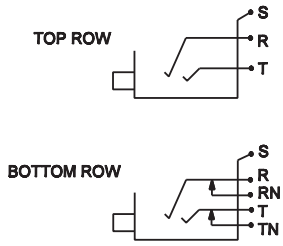


HALF NORMAL

TTP96K1HN
TTP96K3HN

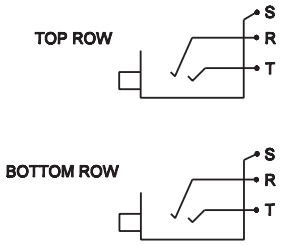


OPEN CIRCUIT

TTP96K1NN
TTP96K3NN

DIMENSIONS ARE FOR REFERENCE ONLY Inch (mm)

Switchcraft®
www.switchcraft.com
5555 North Elston Avenue / Chicago, IL 60630
Phone: 773-792-2700 / Fax: 773-792-2129

# MT48K/MT52K Patchkit Series

## Features and Benefits

- Kit features 48 1/4" longframe jacks in one rack space (1" high) or in two rack spaces (3" high) or 52 1/4" longframe jacks in one rack space (1" high)
- Allows user to add cable and termination panel
- Removable jack panel from the front allows easy soldering of wire connections
- Jacks have gold switching contacts
- Fanned solder terminals for easier soldering
- Offset ground lugs allow easy bussing of ground with one wire
- Jacks have a nickel-plated frame and assembly screws
- Wire management straps are reusable and adjustable

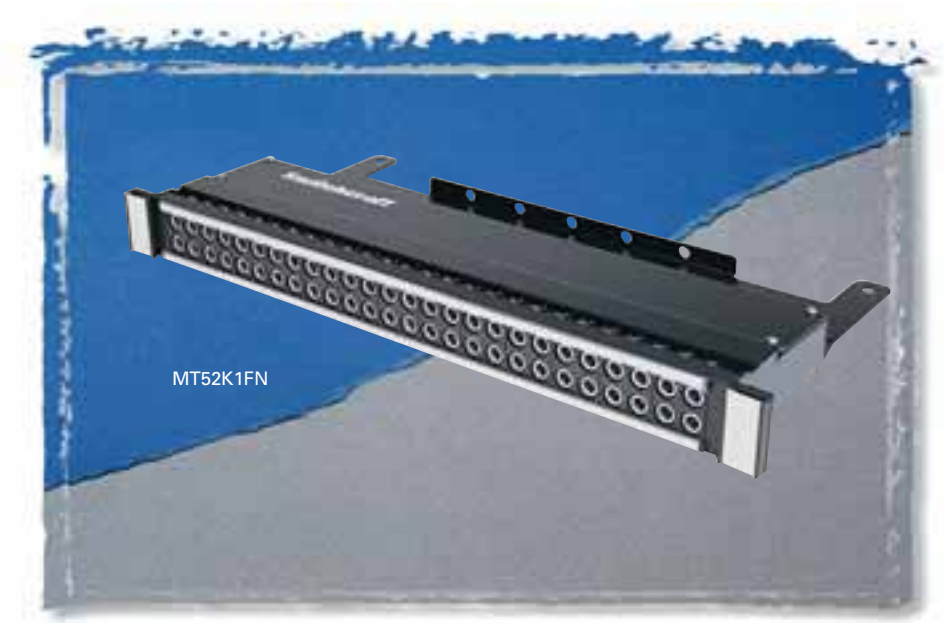


**The MT48/52K Patchkit Series offers the end user a rugged cable tray to support rear cabling. Heavy duty construction takes weight off the back of the jacks for increased reliability. Available in 1.75" or 3.5" height versions.**

## Specifications

### Materials

Jacks
- Frame: Stamped nickel-plated steel
- Bushing: Nickel-plated brass
- Tip, Ring and Shunt Springs: Nickel silver with welded contacts
- Assembly Screws: Nickel-plated steel
- Welded Contacts: Gold alloy

Panel
- Front Panel: Thermoplastic
- Frame: C.R.S. black epoxy paint
- Designation Strips: Black polycarbonate 94V-0
- Designation Strip Covers: Clear polycarbonate

Mechanical
- Life: 30,000 cycles
- Insertion Force: 7 lbs. maximum
- Withdrawal Force: 1 lb. minimum
- Operating: 0˚C to +50˚C

### Electrical

- Contact Resistance: 30 milliohms maximum initial
- Insulation Resistance: 10,000 megohms maximum
- Dielectric Withstanding Voltage: 500VAC at 60 Hz
- Working Voltage: 140VDC maximum
- Current Rating: 100 milliamps

## Ordering Information

| Part Number | Type of Jack | No. of Jacks | Height | Description |
|---|---|---|---|---|
| MT48K1NS | MT | 48 | 1.75" | Normals strapped |
| MT48K1FN | MT | 48 | 1.75" | Full normals |
| MT48K1HN | MT | 48 | 1.75" | Half normals |
| MT48K1NN | MT | 48 | 1.75" | No normals |
| MT52K1NS | MT | 52 | 1.75" | Normals strapped |
| MT52K1FN | MT | 52 | 1.75" | Full normals |
| MT52K1HN | MT | 52 | 1.75" | Half normals |
| MT52K1NN | MT | 52 | 1.75" | No normals |
| MT48K3FN | MT | 48 | 3.5" | Full normals |
| MT48K3HN | MT | 48 | 3.5" | Half normals |
| MT48K3NN | MT | 48 | 3.5" | No normals |
| MT52K3FN | MT | 52 | 3.5" | Full normals |
| MT52K3HN | MT | 52 | 3.5" | Half normals |
| MT52K3NN | MT | 52 | 3.5" | No normals |

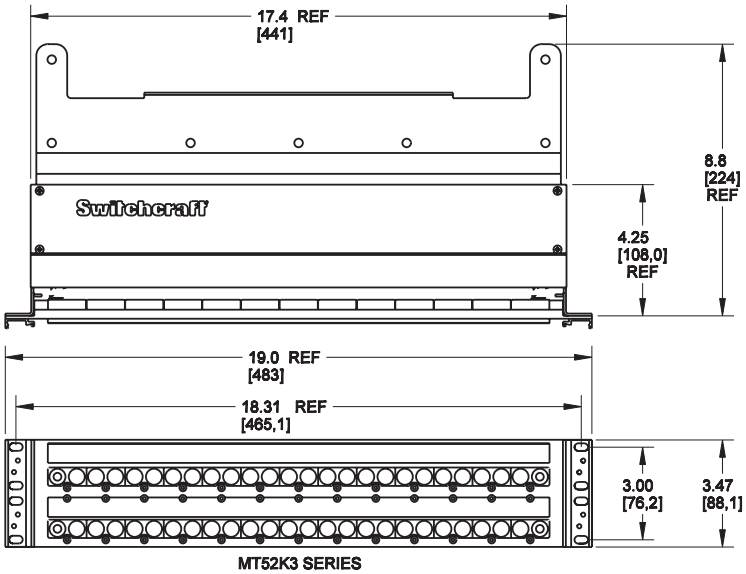


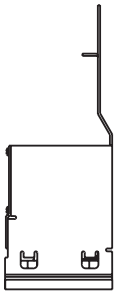

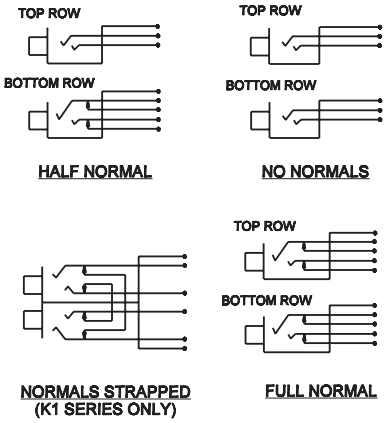


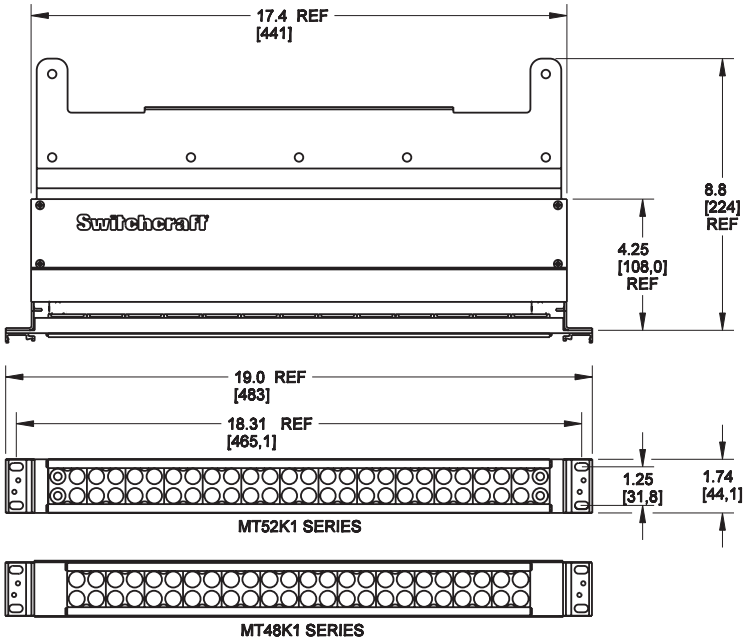

DIMENSIONS ARE FOR REFERENCE ONLY Inch (mm)

Switchcraft®
www.switchcraft.com
5555 North Elston Avenue / Chicago, IL 60630
Phone: 773-792-2700 / Fax: 773-792-2129

# MT48/MT52 Patchbay Series

## Features and Benefits

- Units feature either 48 or 52 MT Jax®
- Steel frame jacks for superior jack life
- Attractive, corrosion resistant nickel-plated jacks
- Gold switching contacts for long-term reliability in normal-through connections
- Offset ground terminal for ease in making common ground buss connections
- Fanned solder terminals for easier solder connections
- Cable tie bar takes the weight of cables off the jacks
- Four jack configurations available for the exact switching arrangement: full normal, half normal, non-normal, and normals strapped

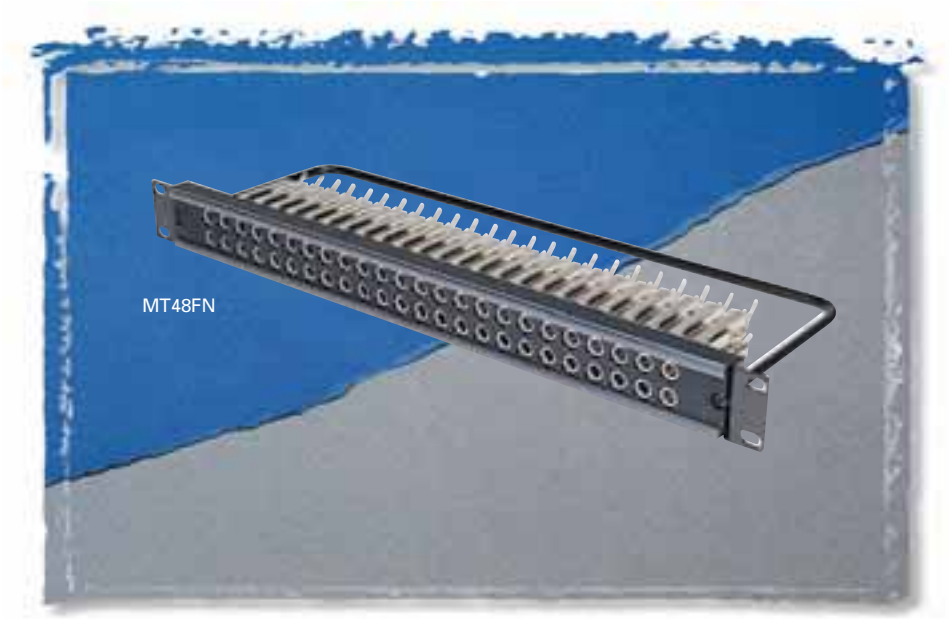


**The MT48/52 Series patchbays offer a rugged cable tie bar to support rear cabling. Also available is the normals strapped configuration which has the shunts or normals tied together, top to bottom jacks.**

## Specifications

### Materials

Jacks
- Frame: Steel, nickel-plated
- Bushing: Brass, nickel-plated
- Springs: Nickel silver, solder lugs
- Ground Terminal: Nickel silver, solder lugs
- Switching Contacts: Welded, gold alloy
- Insulation: Phenolic spacers, rigid PVC tubing through stack
- Screws: Steel, nickel-plated

Panel
- Jack Panel: Thermoplastic
- Cable Support Bracket: 5/16" diameter black epoxy painted steel rod
- Screws (designation strip): Steel, black zinc-plated
- Screws (mounting jack): Steel, nickel plated
- Kwik-change® Designation Strip: Extruded aluminum, black anodized
- Marking Strip: White plastic, matte finish
- Marking Strip Cover: Clear, extruded plastic

### Mechanical

Life: 30,000 cycles
Insertion Force: 7 lbs. maximum
Withdrawal Force: 1 lb. minimum
Operating: 0˚C to +50˚C

### Electrical

Contact Resistance: 30 milliohms maximum initial
Insulation Resistance: 10,000 megohms maximum
Dielectric Withstanding Voltage: 500VAC at 60 Hz
Working Voltage: 140VDC maximum
Current Rating: 100 milliamps

## Ordering Information

| Part Number | Type of Jack | No. of Jacks | Description |
|---|---|---|---|
| MT48FN | MT | 48 | Full normals |
| MT48HN | MT | 48 | Half normals |
| MT48NN | MT | 48 | No normals |
| MT48NS | MT | 48 | Normals strapped |
| MT52FN | MT | 52 | Full normals |
| MT52HN | MT | 52 | Half normals |
| MT52NN | MT | 52 | No normals |
| MT52NS | MT | 52 | Normals strapped |

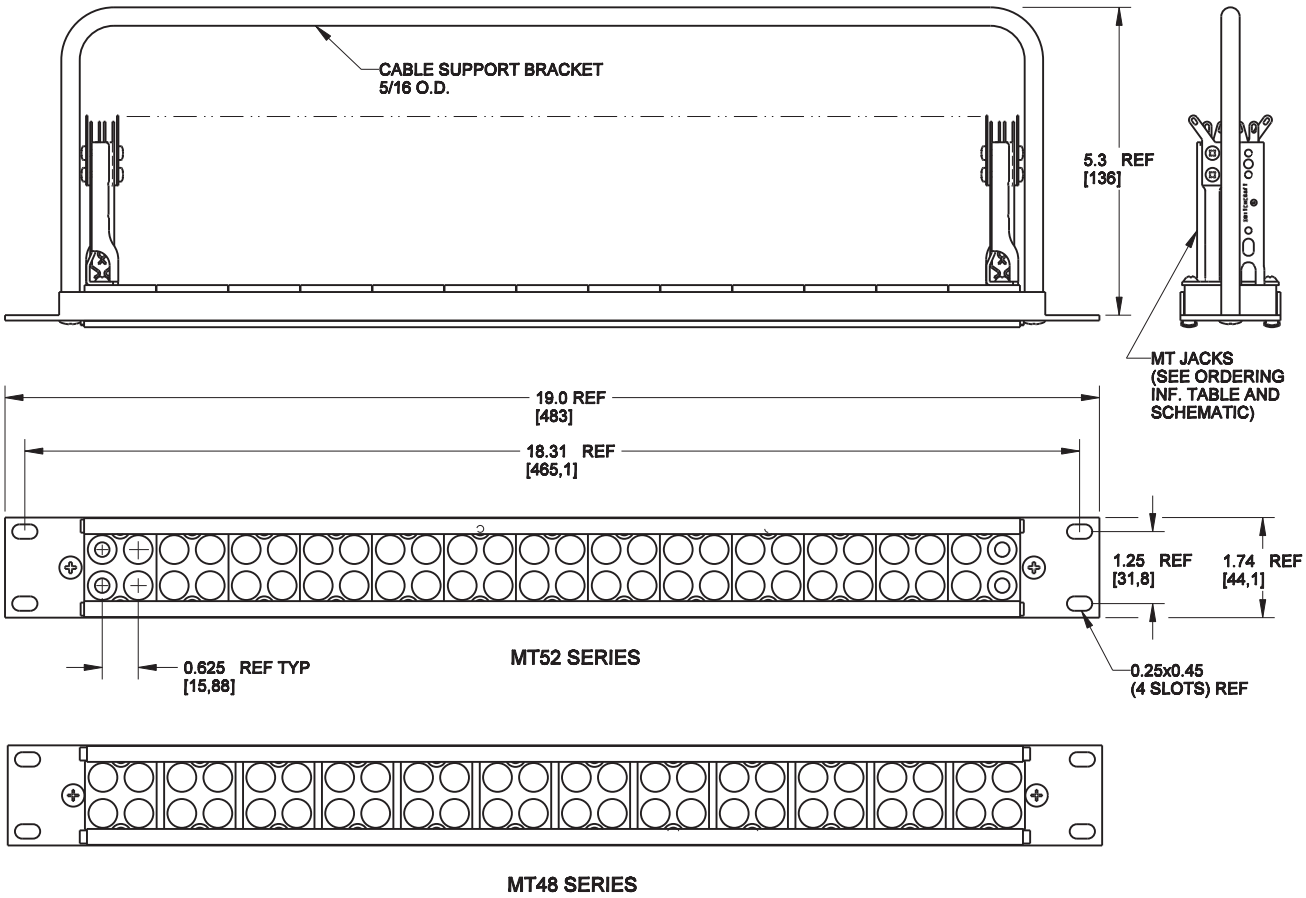


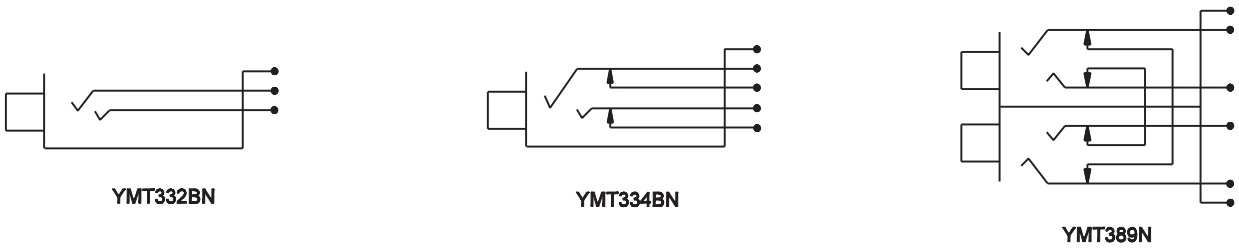


JACK SCHEMATICS
"N" SUFFIX DENOTES WELDED GOLD CONTACTS
AND NICKEL-PLATED FRAME

DIMENSIONS ARE FOR REFERENCE ONLY Inch (mm)

Switchcraft®
www.switchcraft.com
5555 North Elston Avenue / Chicago, IL 60630
Phone: 773-792-2700 / Fax: 773-792-2129

# TTP96AS Patchbay Series

## Features and Benefits

- Unit features 96 TT jacks
- Attractive, corrosion resistant nickel-plated jacks
- Steel frame jack for superior jack life
- Extra wide labeling strips provide maximum space
- Rugged cable tie bar takes the weight of cables off the jacks
- Rugged, attractive black anodized aluminum face will not break
- Three jack configurations available for the exact switching arrangement you need: full normal, half normal, and open circuit panel
- Fanned solder terminals for easier solder connections
- Offset ground terminal for ease in making common ground buss connections
- Gold switching contacts for long-term reliability in normal-through connections

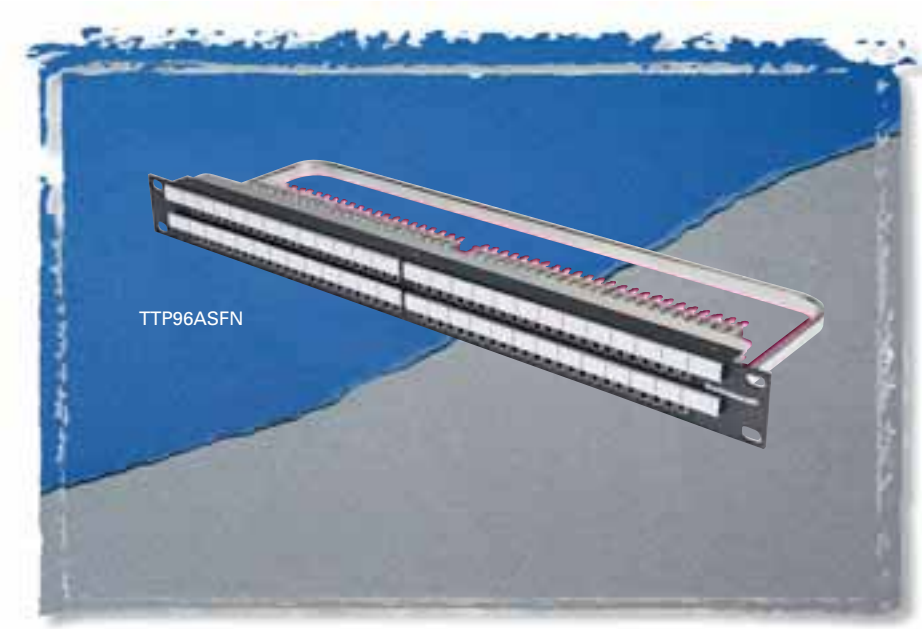


**The TTP96AS Series of patchbays offer a rugged cable tie bar to support rear cabling.**

## Specifications

### Materials

Jacks
- Frame: Steel, nickel-plated
- Bushing: Nickel-plated copper alloy
- Springs: Copper alloy solder lugs
- Ground Terminal: Steel, tin electrodeposited
- Switching Contacts: Welded, gold alloy inlay over palladium base
- Insulation: Rigid plastic spacers, rigid PVC tubing through stack
- Screws: Steel, plated

Panel
- Frame: Black anodized aluminum
- Inserts: Polyester, glass filled, 94V-0
- Cable Support Bar: Cold rolled steel, nickel-plated
- Designation Strips: Thermoplastic, 94V-0
- Designation Strip Covers: Clear thermoplastic, SE-1
- Marking Strip: Rigid vinylite
- Jack Mounting Screws: Steel, plated
- Screws: Steel, black plated

### Mechanical

- Life: 30,000 cycles
- Insertion Force: 7 lbs. maximum
- Withdrawal Force: 1 lb. minimum
- Environmental: 0˚C to +50˚C

### Electrical

- Contact Resistance: 30 milliohms maximum initial
- Insulation Resistance: 10,000 megohms maximum
- Dielectric Withstanding Voltage: 500VAC at 60 Hz
- Working Voltage: 140VDC maximum
- Current Rating: 100 milliamps

## Ordering Information

| Part Number | Type of Jack | No. of Jacks | Description |
|---|---|---|---|
| TTP96ASFN | TT | 96 | Full normals |
| TTP96ASHN | TT | 96 | Half normals |
| TTP96ASNN | TT | 96 | No normals |

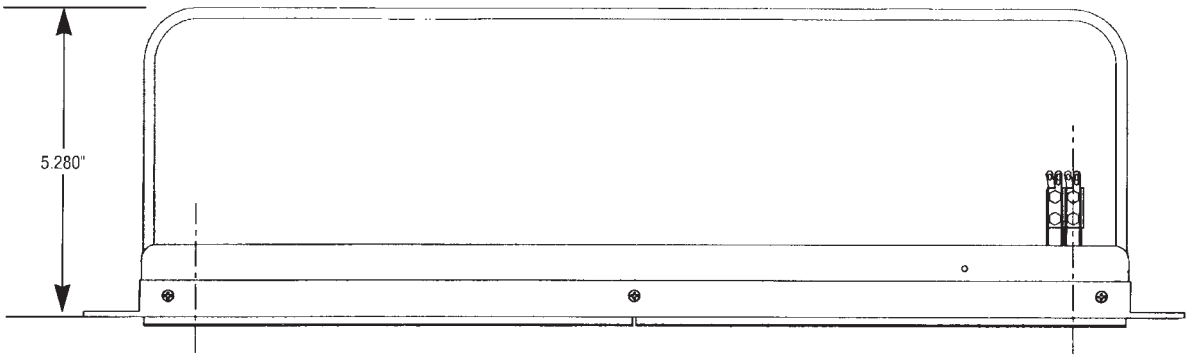


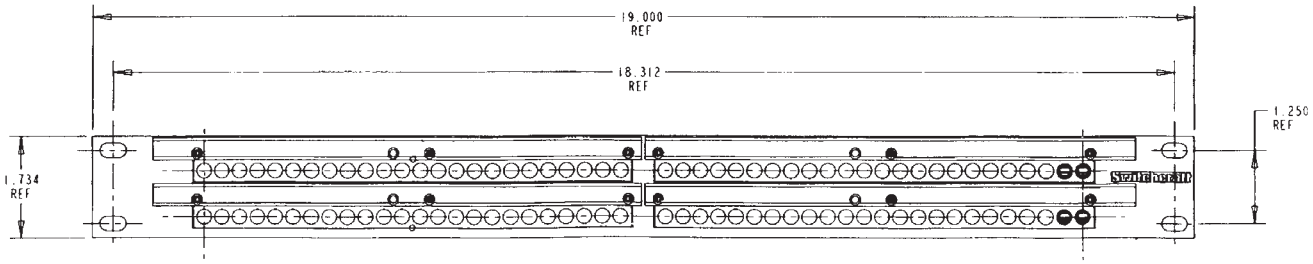


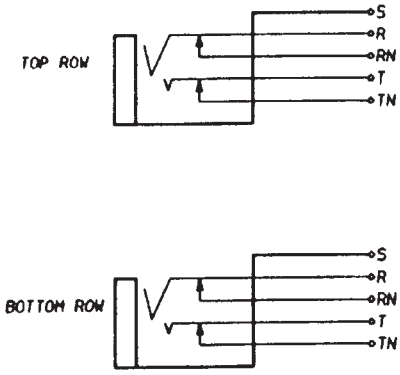


TTP96ASFN

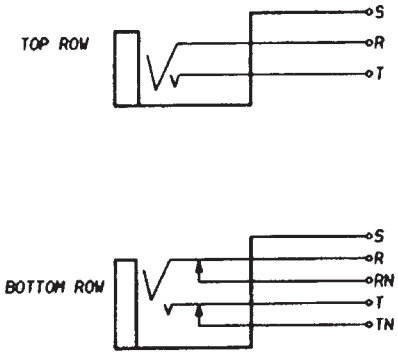


TTP96ASHN

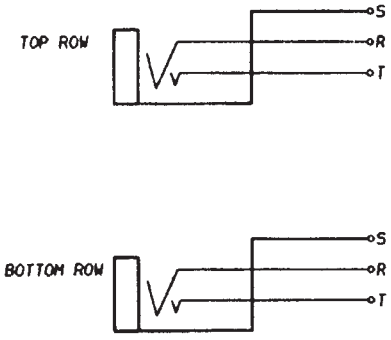


TTP96ASNN

DIMENSIONS ARE FOR REFERENCE ONLY Inch (mm)

Switchcraft®
www.switchcraft.com
5555 North Elston Avenue / Chicago, IL 60630
Phone: 773-792-2700 / Fax: 773-792-2129

# HPC Patchbay Series

## Features and Benefits

- Available in 1RU or 2RU versions
- Available with or without connectors
- HPC Series connectors are compatible with Neutrik Speakon® connectors
- Cable tie bar takes weight of the cables off the terminations
- Rugged aluminum channel
- Silk-screen designation area makes it easy to re-label channels

### Panel Materials

Housing: Thermoplastic UL 94V-0 rated
Contacts: Silver-plated over copper alloy
Frame: Aluminum, black anodized
Cable Tie Bar: Steel, black epoxy

## HP Connector Specifications

### Mechanical

Shock: Per Mil-Std 202, Method 213B, Cond. K
Vibration: Mil-Std 202, Method 201A
Life: 1,000 rotational cycles
Cable Range (cord mount): 10AWG, 0.560" cable OD maximum

### Electrical

Voltage Rating: 1,500 AC RMS, per Mil-Std 202, Method 301
Current Rating (Faston® terminals): 50A RMS w/10AWG wire, normal ambient, per UL 1977
Current Rating (PC terminals): 30A per UL 1977
Contact Resistance: 1mΩ, 1.5mΩ after 1,000 insertion/withdrawals
Insulation Resistance: .2TΩ

### Environmental

Salt Spray: Mil-Std 202, Method 101D, Cond.B
Thermal Shock: Mil-Std 202, Method 107G
Temperature Limits: -55˚C to +85˚C
Moisture Resistance: Mil-Std 202, Method 106E
Life @ Ambient Temperature: Mil-Std 202, Method 108A
Touchproof: IEC 65 and 1010-1
IP Rating: IEC 529, IP 25

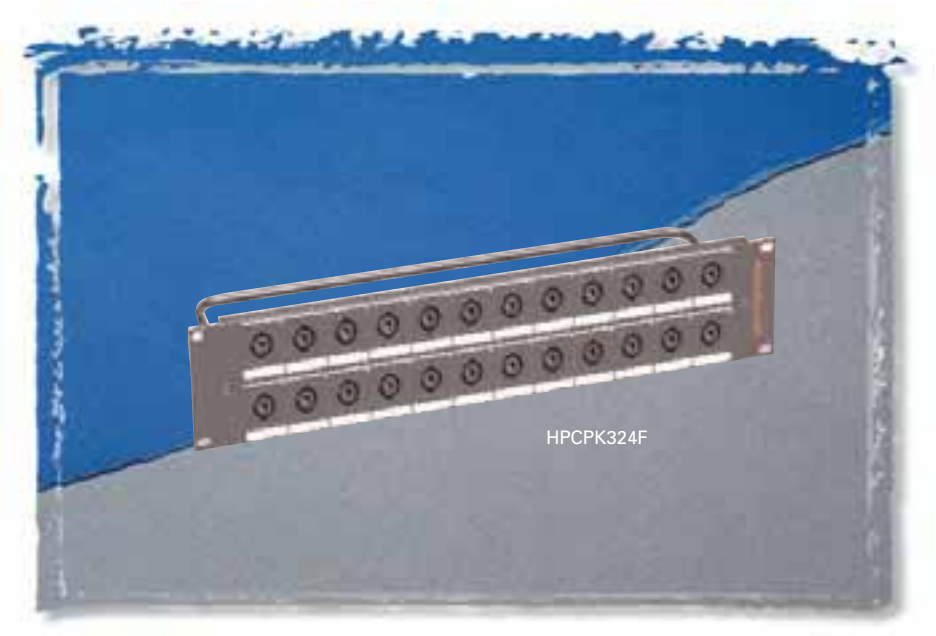


**The HPC Patchbay features a 19" rack unit loaded with HPC Series connectors. Available with either 0.250" Faston® terminals or 0.187" Faston® terminals. One rack unit height versions come with 12 HPC connectors, two rack unit height versions come with 24 HPC connectors. All versions have a rugged cable tie bar, which takes the weight of the cabling away from the connections.**

### Materials

Housings: Thermoplastic UL 94V-0 rated
Seal Rings: Thermoplastic rubber
Contacts: Silver-plated over copper alloy

## Ordering Information

| Part Number | Height | Description |
|---|---|---|
| HPCPK112F | 1.75" | 12 connectors, 0.250" Fastons |
| HPCPK112F1 | 1.75" | 12 connectors, 0.187" Fastons |
| HPCPK1B | 1.75" | Blank panel |
| HPCPK324F | 3.50" | 24 connectors, 0.250" Fastons |
| HPCPK324F1 | 3.50" | 24 connectors, 0.187" Fastons |
| HPCPK3B | 3.50" | Blank panel |

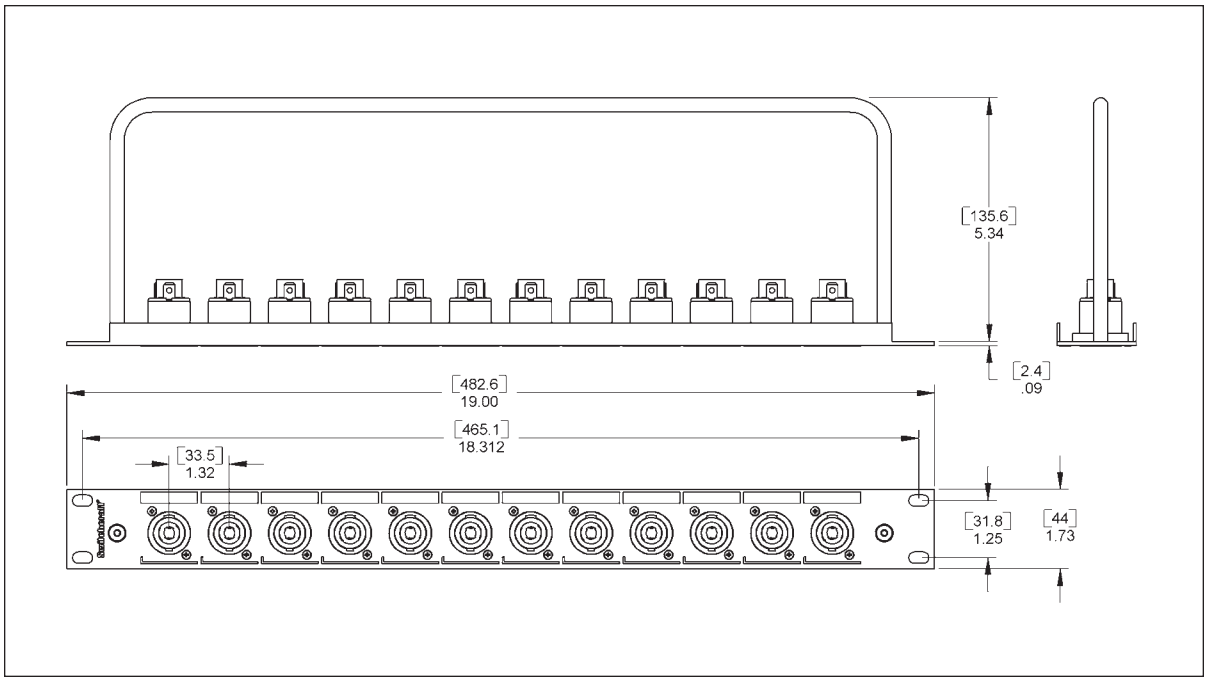


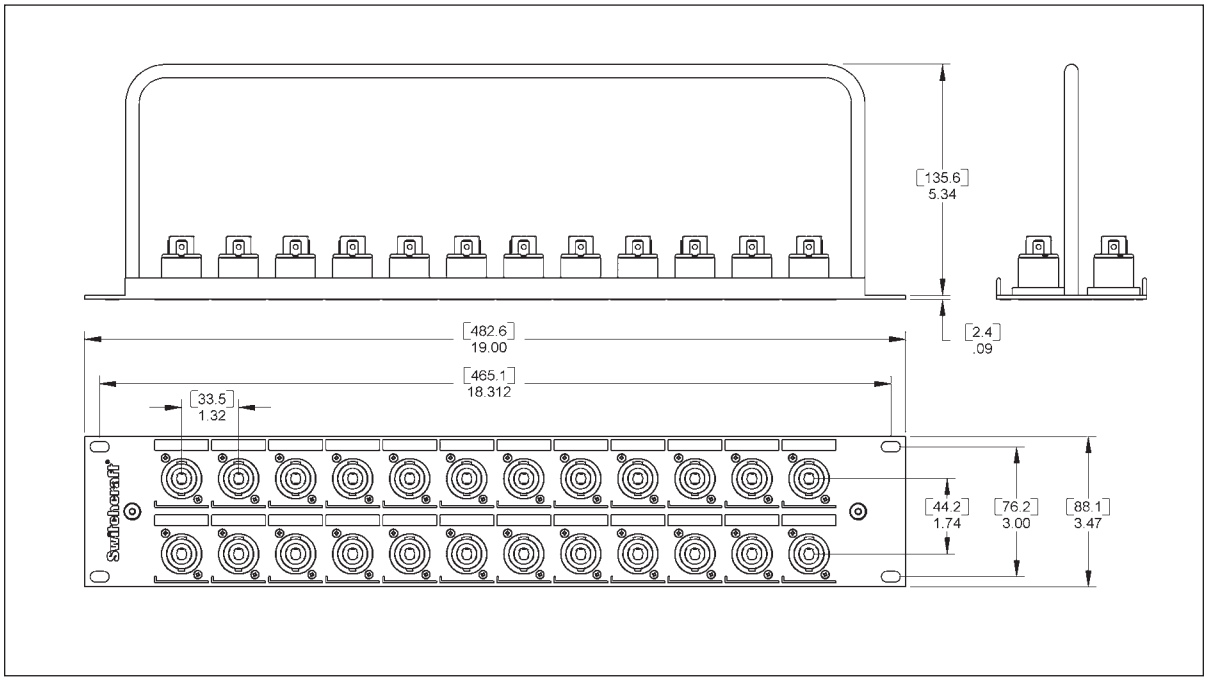


DIMENSIONS ARE FOR REFERENCE ONLY Inch (mm)

Switchcraft®
www.switchcraft.com
5555 North Elston Avenue / Chicago, IL 60630
Phone: 773-792-2700 / Fax: 773-792-2129

# Q-G® Patchbay Series

## Features and Benefits

- Available in 1RU or 2RU versions
- Available with or without the connectors
- E Series connectors are silver-plated, 3 pins/contacts with black finish
- Cable tie bar takes the weight of the cables off the solder terminations
- Rugged aluminum channel increases durability
- Silk-screen designation area makes it easy to re-label channels

## Specifications

### Materials

Connectors
Housing: Die-cast, black velvet finish
Inserts: Glass-filled thermoplastic
Pin/Contacts: Copper alloy, silver-plated
Latch Release: Steel, nickel-plated
Insert Locking Cam: Die-cast zinc

Frame
Aluminum, black anodized

Cable Tie Bar
Steel, black epoxy

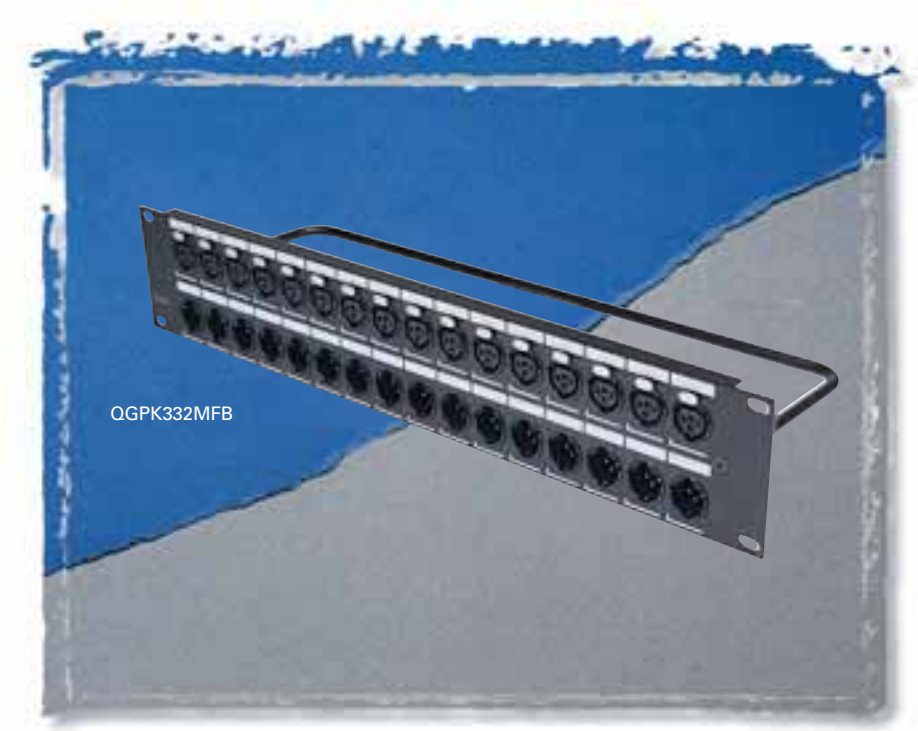


**The QG® Patchbay features a 19" rack unit loaded with E Series QG® connectors. These XLR's have the same panel cut-out, male or female, silver-plated pins or contacts, and a black finish. All connectors have solder cup terminals for easy soldering and the inserts are removable from the back, allowing for easy changes. The one rack unit height version comes with 16 male, or 16 female, or 8 male and 8 female connectors. The two rack unit version comes with 16 male and 16 female connectors. We also offer the unit without connectors, but with the panel cut-outs already punched out.**

**All versions have a rugged cable tie bar, which takes the weight of the cabling away from the solder connections.**

## Ordering Information

| Part Number | Height | Description |
|---|---|---|
| QGPK116FB | 1.75" | 16 female |
| QGPK116MB | 1.75" | 16 male |
| QGPK18M8FB | 1.75" | 8 male, 8 female |
| QGPK332MFB | 3.5" | 16 female( top), 16 male (bottom) |
| QGPK1B | 1.75" | Blank panel |
| QGPK3B | 3.5" | Blank panel |

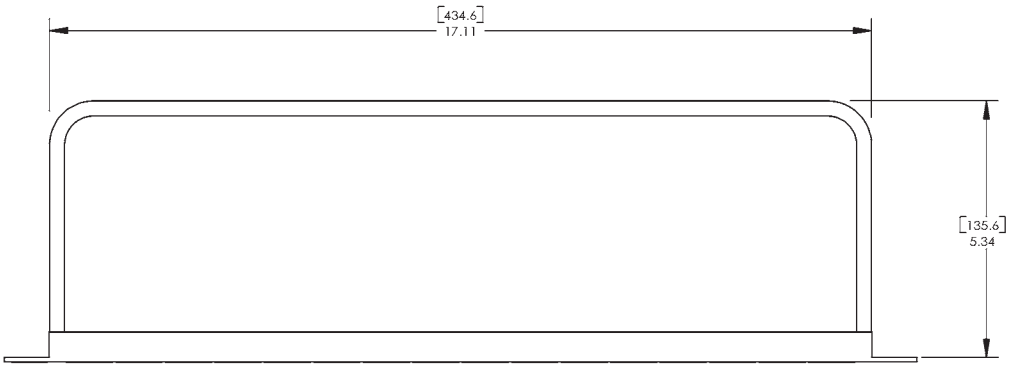


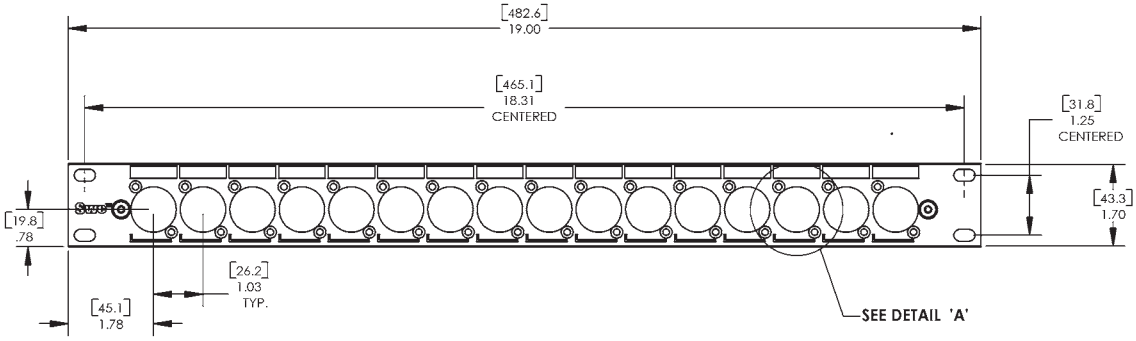


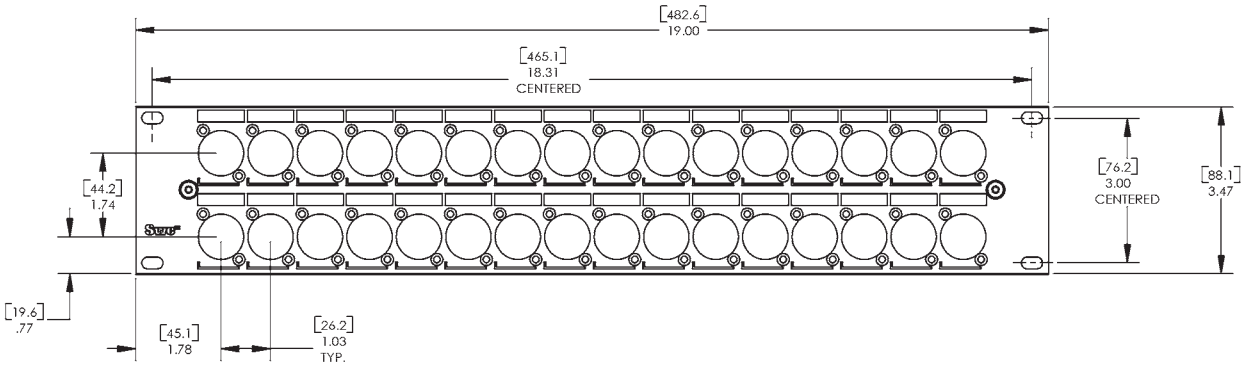


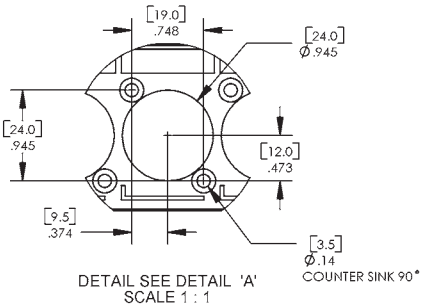


DIMENSIONS ARE FOR REFERENCE ONLY $\frac{\text{Inch}}{\text{(mm)}}$

Switchcraft®
www.switchcraft.com
5555 North Elston Avenue / Chicago, IL 60630
Phone: 773-792-2700 / Fax: 773-792-2129

# VPP Video Patchbay Series

## Features and Benefits

- HD Series rated from DC to 3.0 GHz
- SD Series has a bandwidth from DC to 1.75GHz
- Black thermoplastic modules insulate jacks from chassis
- Jacks feature rugged heavy duty housings

## Video Jack Specifications

### Electrical

Rated Bandwidth: 3.0 GHz (HD), 1.75 GHz (SD)
Characteristic Impedance: 75 ohms
Return Loss: Better than –15 dB
Insertion Loss: Better than –.5 dB
Contact Resistance: Less than 20 milliohms
Termination Resistance: 75 W, ±1%
Center Conductor: Accepts .090 pin diameter

### Mechanical

Mechanical Shock: Per MIL-STD-202, Method 213, Test condition I
Vibration: Per MIL-STD-202, Method 201
Life Cycle: 30,000

### Materials

Housing: Zinc alloy, nickel plated
Center Contacts: Copper alloy, gold plated
Switching Springs: Copper alloy, gold plated
Grounding Contacts:
HD Series - Copper alloy, gold plated
SD Series - Copper alloy, nickel plated
Insulators: Thermoplastic, UL 94V-0 rated

### Environmental

Operating Temperature: – 40°C to 65°C
Storage Temperature: – 55°C to 85°C
Thermal Shock: Per MIL-STD-202, Method 107
Moisture and Humidity: Per MIL-STD-202, Method 106

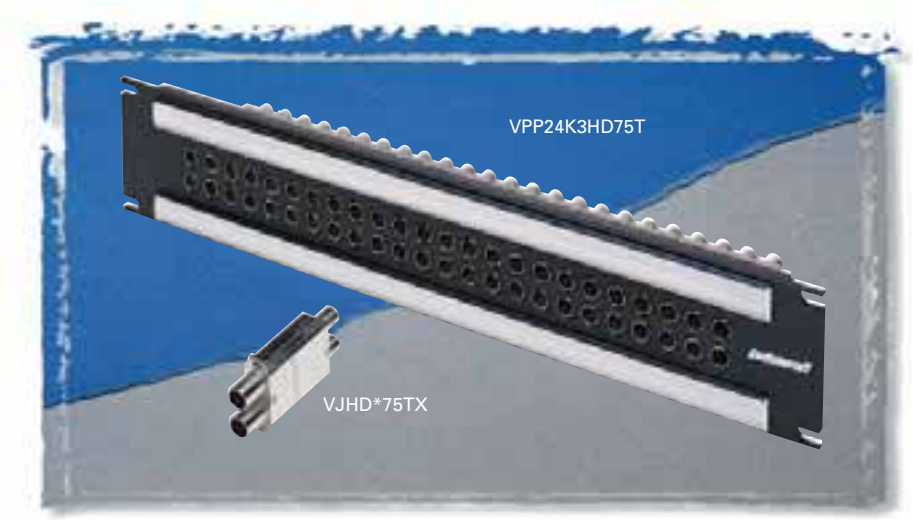


**The VPP Series video patchbays offer a wide variety of options for video patching. The HD Series meets SMPTE 292M specifications for high definition video signaling, covering a bandwidth range from DC to 3.0GHz. The SD Series is perfect for serial digital, with a bandwidth from DC to 1.75GHz. Both come in either terminated or non-terminated, 24 or 26 jacks, 1.75" or 3.5" heights.**

## Ordering Information

| Part Number | Type of Jack | No. of Jacks | Height | Description |
|---|---|---|---|---|
| VPP24K1HD*75T | HD | 24 | 1.75" | Terminated |
| VPP24K1HD*NT | HD | 24 | 1.75" | Non-term |
| VPP24K1SD*75T | SD | 24 | 1.75" | Terminated |
| VPP24K1SD*NT | SD | 24 | 1.75" | Non-term |
| VPP26K1HD*75T | HD | 26 | 1.75" | Terminated |
| VPP26K1HD*NT | HD | 26 | 1.75" | Non-term |
| VPP26K1SD*75T | SD | 26 | 1.75" | Terminated |
| VPP26K1SD*NT | SD | 26 | 1.75" | Non-term |
| VPP24K3HD*75T | HD | 24 | 3.5" | Terminated |
| VPP24K3HD*NT | HD | 24 | 3.5" | Non-term |
| VPP24K3SD*75T | SD | 24 | 3.5" | Terminated |
| VPP24K3SD*NT | SD | 24 | 3.5" | Non-term |
| VPP26K3HD*75T | HD | 26 | 3.5" | Terminated |
| VPP26K3HD*NT | HD | 26 | 3.5" | Non-term |
| VPP26K3SD*75T | SD | 26 | 3.5" | Terminated |
| VPP26K3SD*NT | SD | 26 | 3.5" | Non-term |

* Add "N" for non-normalled version

**See Page 36 for Individual Jacks Ordering Information**

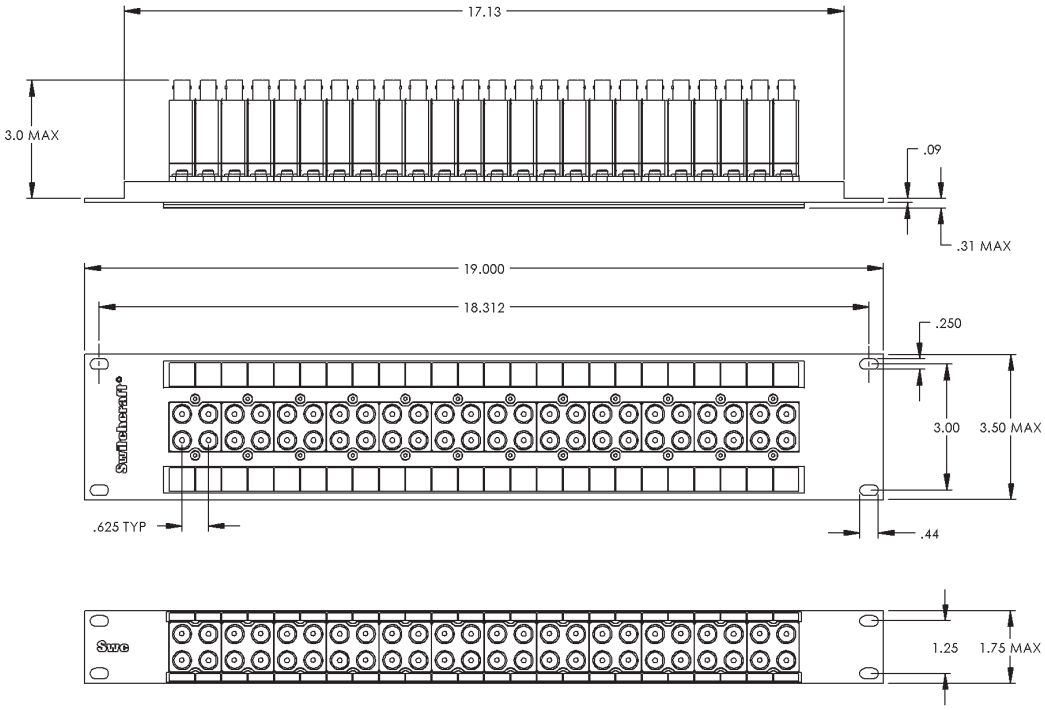


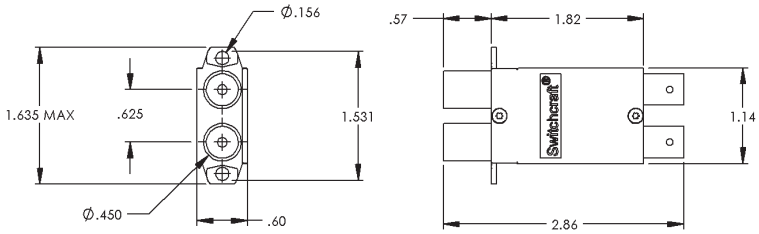


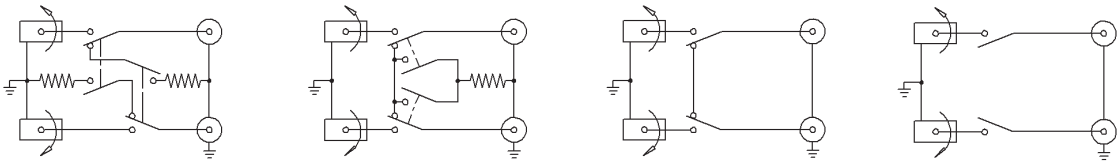

NON-NORMALLED TERMINATED | NORMALLED TERMINATED | NORMALLED NON-TERMINATED | NON-NORMALLED NON-TERMINATED

DIMENSIONS ARE FOR REFERENCE ONLY $\frac{\text{Inch}}{\text{(mm)}}$

Switchcraft®
www.switchcraft.com

5555 North Elston Avenue / Chicago, IL 60630
Phone: 773-792-2700 / Fax: 773-792-2129

# VPP Video Patchbay Series

## Ordering - Individual Jacks

| Part Number | Type | Description |
|---|---|---|
| VJHD*75TX | HD | Terminated |
| VJHD*NTX | HD | Non-terminated |
| VJSD*75TX | SD | Terminated |
| VJSD*NTX | SD | Non-terminated |

* Add "N" for non-normalled version

SMITH CHART (TYPICAL)

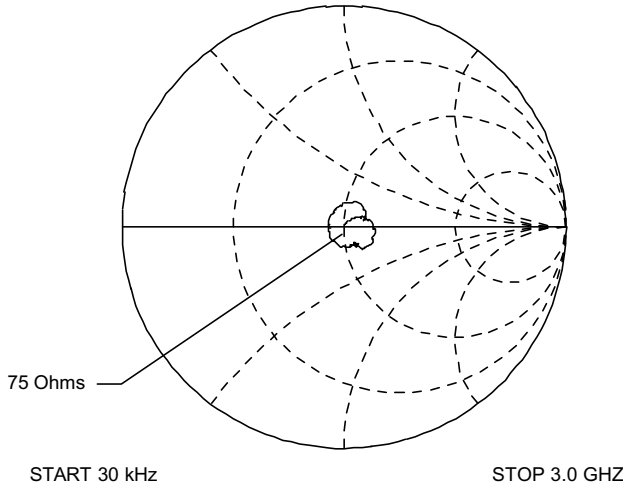


RETURN LOSS (TYPICAL)

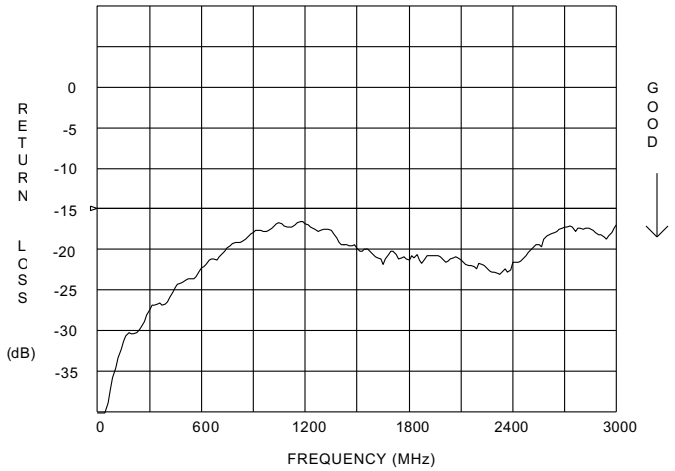


INSERTION LOSS (TYPICAL)

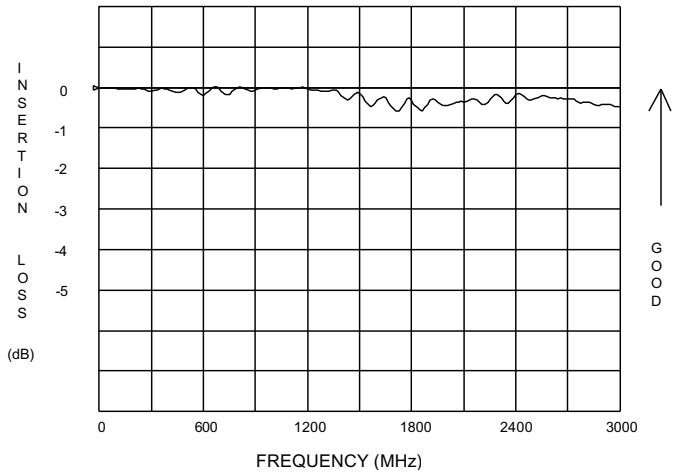

# MVP Midsize Video Patchbay Series



## Features and Benefits

- Midsize video jacks rated from DC to 3 GHz
- 32 midsize jacks mounted either 1RU, 1.5RU or 2RU panel
- Available in terminated or non-terminated configurations

## Specifications

### Materials

Frame: Aluminum, black anodized
Designation Strips: Vinylite, white
Designation Strip Covers: Lexan, transparent
Jack Inserts: Thermoplastic, UL 94V-0 rated

## Midsize Video Jack Specifications

### Electrical

Rated Bandwidth: 3.0 GHz
Characteristic Impedance: 75 ohms
Return Loss: See Typical Return Loss Chart
Insertion Loss: See Typical Insertion Loss Chart
Contact Resistance: Less than 20 milliohms
Termination Resistance: 75 W, ±1%
Center Conductor: Accepts .048 pin diameter

### Mechanical

Mechanical Shock: Per MIL-STD-202, Method 213, Test condition I
Vibration: Per MIL-STD-202, Method 201
Life Cycle: 30,000

### Materials

Housing: Zinc alloy, nickel plated
Center Contacts: Copper alloy, gold plated
Switching Springs: Copper alloy, gold plated
Grounding Contacts: Copper alloy, gold plated
BNC Insulators: Teflon
Actuators: Thermoplastic, UL94V-0 rated

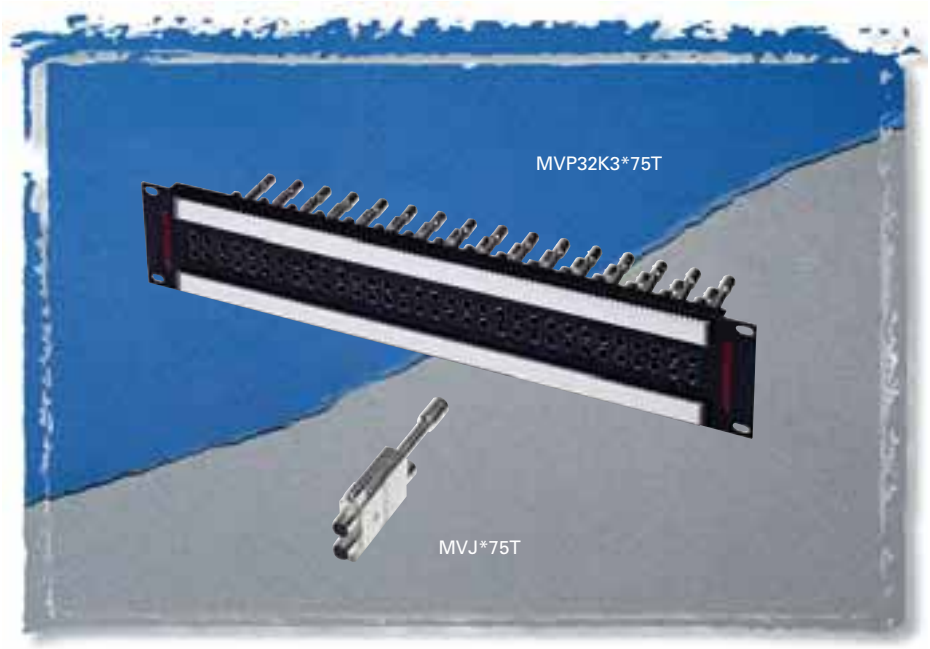


**The MVP Series video patchbays offer outstanding performance and high density. Patchbays consist of 32 jacks in either 1RU or 2RU heights, jacks come either terminated or non-terminated. These jacks are rated from DC to 3 GHz, and are rated at 30,000 lifecycles. The 1.5RU and 2RU come with cable tie bars.**

### Environmental

Operating Temperature: – 40°C to 65°C
Storage Temperature: – 55°C to 85°C
Thermal Shock: Per MIL-STD-202, Method 107
Moisture and Humidity: Per MIL-STD-202, Method 106

## Ordering Information

| Part Number | Type of Jack | Height | Description |
|---|---|---|---|
| MVP32K1*75T | Midsize | 1.75" | Terminated |
| MVP32K1*NT | Midsize | 1.75" | Non-terminated |
| MVP32K2*75T | Midsize | 2.62" | Terminated |
| MVP32K2*NT | Midsize | 2.62" | Non-terminated |
| MVP32K3*75T | Midsize | 3.5" | Terminated |
| MVP32K3*NT | Midsize | 3.5" | Non-terminated |

*** Add "N" for non-normalled version**

**See Page 39 for Individual Midsize Jacks Ordering Information**


5555 North Elston Avenue / Chicago, IL 60630
Phone: 773-792-2700 / Fax: 773-792-2129

# MVP Midsize Video Patchbay Series

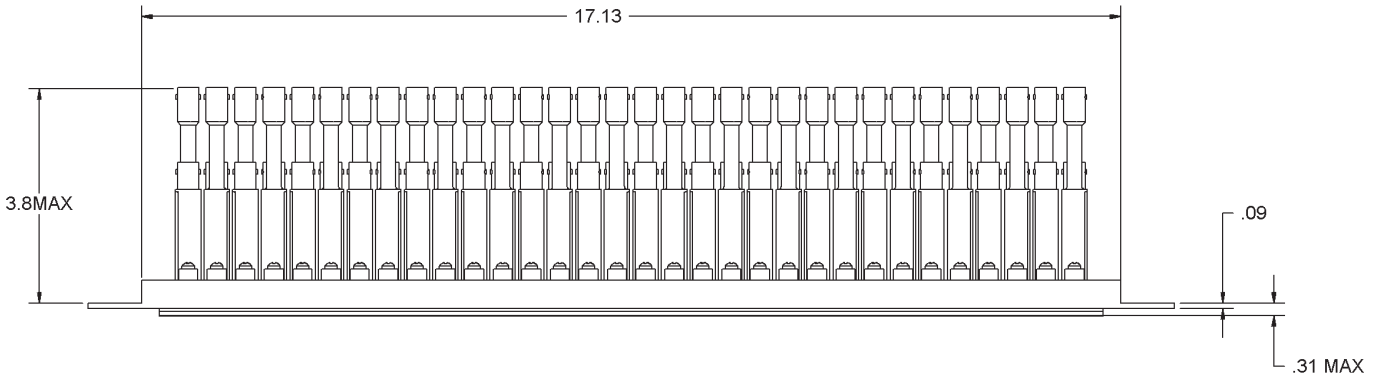


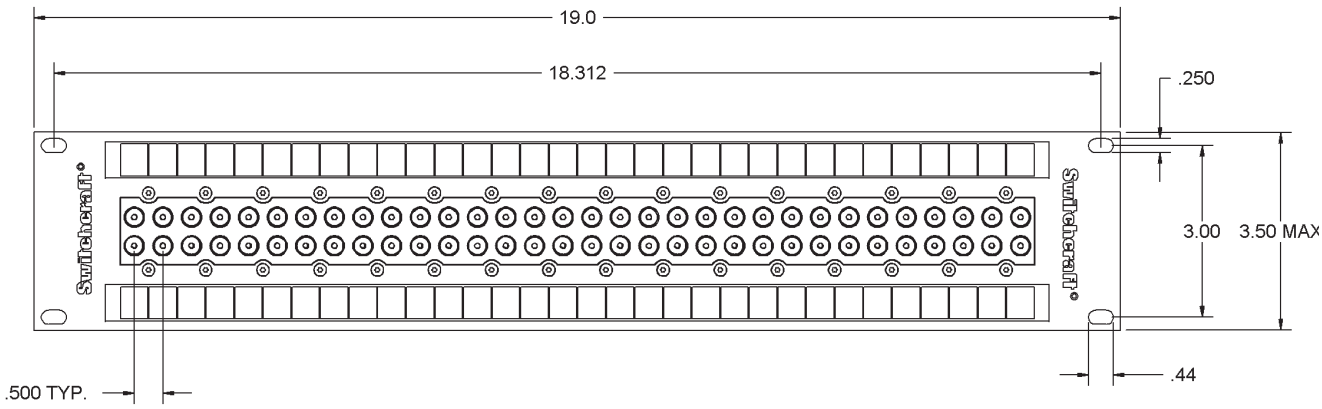


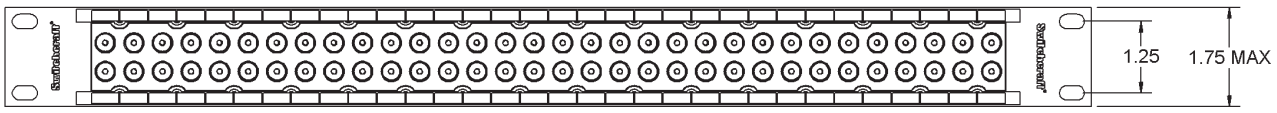


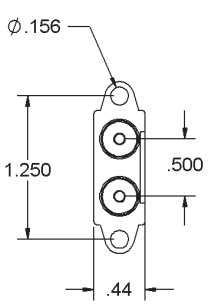


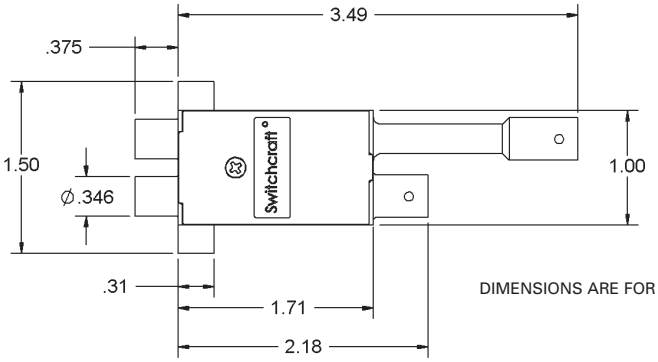


DIMENSIONS ARE FOR REFERENCE ONLY Inch (mm)

Switc

## Ordering - Individual Midsize Jacks

| Part Number | Type | Description |
|---|---|---|
| MVJ*75T | HD | Terminated |
| MVJ*NT | HD | Non-terminated |

* Add "N" for non-normalled version

SMITH CHART (TYPICAL)

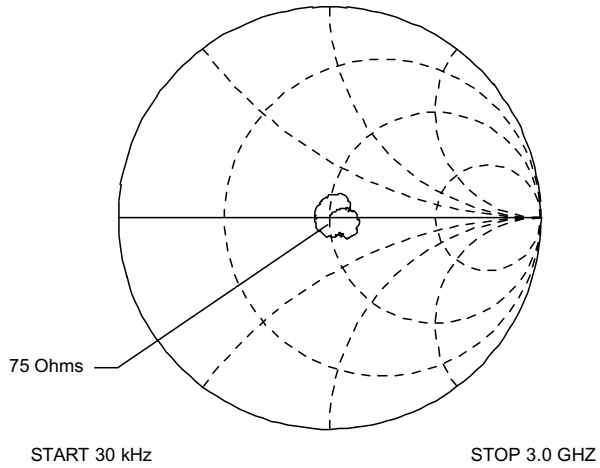


RETURN LOSS (TYPICAL)

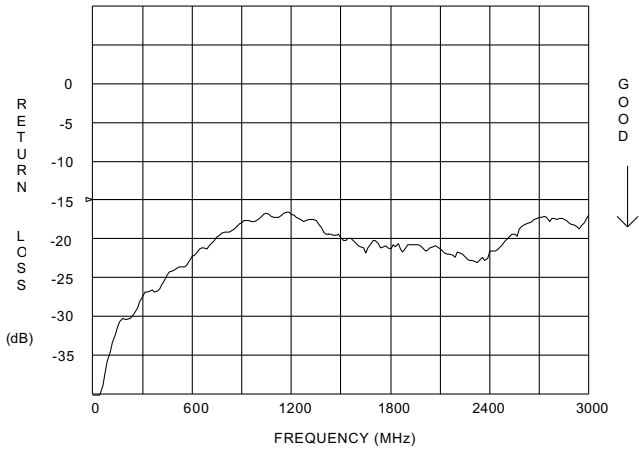


INSERTION LOSS (TYPICAL)

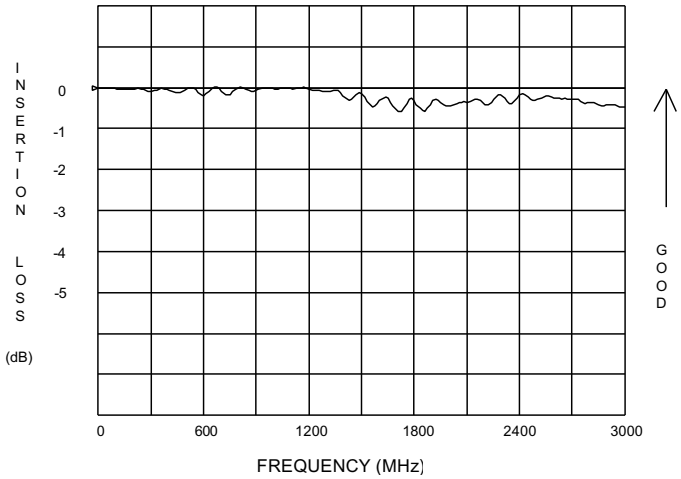


DIMENSIONS ARE FOR REFERENCE ONLY Inch (mm)

Switchcraft®
www.switchcraft.com
5555 North Elston Avenue / Chicago, IL 60630
Phone: 773-792-2700 / Fax: 773-792-2129

# VAP Video/Audio Patchbay Series

## Features and Benefits

- Combines 13 video jacks and 26 long-frame audio jacks into one patchbay
- Available with either HD Series or SD Series video jacks
- All audio jacks are nickel-plated with steel frames and gold-plated switching contacts
- Audio modules consist of 4 YMT334BN jacks, video modules consist of 2 dual video jacks

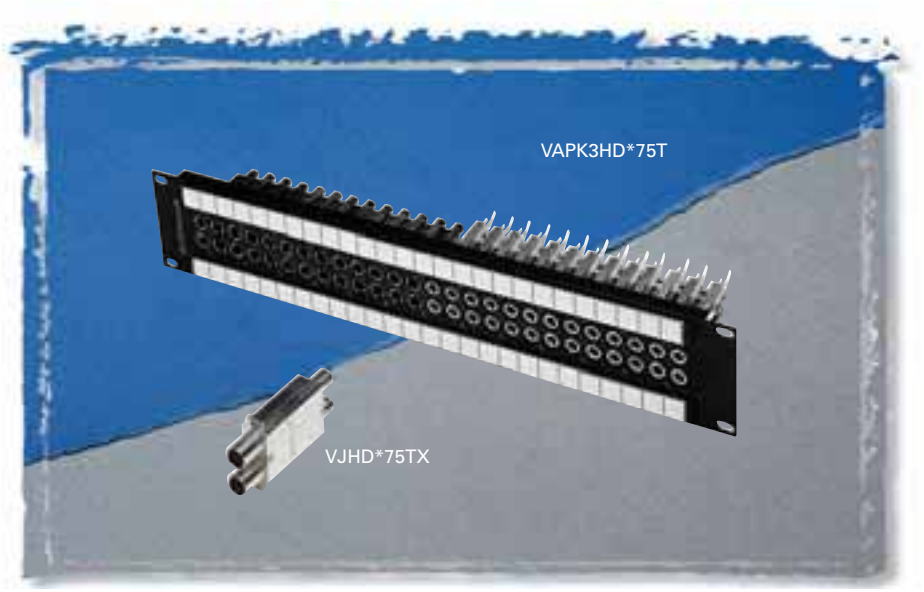


**The VAP Series combines audio and video in one convenient patchbay. Standard versions consist of 13 video jacks and 26 long-frame audio jacks into one unit. Options include HD Series video jacks which are rated from DC to 2.4GHz or SD Series rated from DC to 1.5GHz. Both come in either terminated or non-terminated jacks. The MT Style audio jacks all have nickel-plated steel frames and gold-plated switching contacts. Flared terminals make soldering easier. All audio jacks are T,R,S, TN, and RN. Individual modules are useful for custom configurations.**

## Video Jack Specifications

### Electrical

Rated Bandwidth: 2.4 GHz (HD), 1.75 GHz (SD)
Characteristic Impedance: 75 ohms
Return Loss: Better than –15 dB
Insertion Loss: Better than –.5 dB
Contact Resistance: Less than 20 milliohms
Termination Resistance: 75 W, ±1%
Center Conductor: Accepts .090 pin diameter

### Mechanical

Mechanical Shock: Per MIL-STD-202, Method 213, Test condition I
Vibration: Per MIL-STD-202, Method 201
Life Cycle: 30,000

### Materials

Housing: Zinc alloy, nickel plated
Center Contacts: Copper alloy, gold plated
Switching Springs: Copper alloy, gold plated
Grounding Contacts:
HD Series - Copper alloy, gold plated
SD Series - Copper alloy, nickel plated
Insulators: Thermoplastic, UL 94V-0 rated

### Environmental

Operating Temperature: – 40°C to 65°C
Storage Temperature: – 55°C to 85°C
Thermal Shock: Per MIL-STD-202, Method 107
Moisture and Humidity: Per MIL-STD-202, Method 106

## Ordering Information

| Part Number | Type of Jack | Height | Description |
|---|---|---|---|
| VAPK1HD*75T | HD | 1.75" | Terminated |
| VAPK1HD*NT | HD | 1.75" | Non-terminated |
| VAPK1SD*75T | SD | 1.75" | Terminated |
| VAPK1SD*NT | SD | 1.75" | Non-terminated |
| VAPK3HD*75T | HD | 3.5" | Terminated |
| VAPK3HD*NT | HD | 3.5" | Non-terminated |
| VAPK3SD*75T | SD | 3.5" | Terminated |
| VAPK3SD*NT | SD | 3.5" | Non-terminated |
| **Modules** | | | |
| VMAFN | MT Style | | 4- YMT334BN jacks |
| VMVHD*75T | HD | | 2- HD terminated jacks |
| VMVHD*NT | HD | | 2- HD non-terminated jacks |
| VMVSD*75T | SD | | 2- SD terminated jacks |
| VMVSD*NT | SD | | 2-SD non-terminated jacks |

* Add "N" for non-normalled version

**See Page 36 For Video Jack Ordering Information and Page 69 For Audio Jack Ordering Information**

Switc

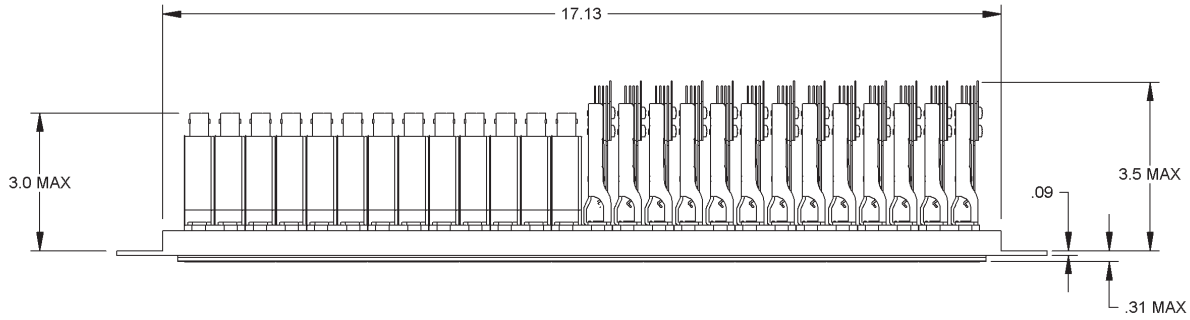


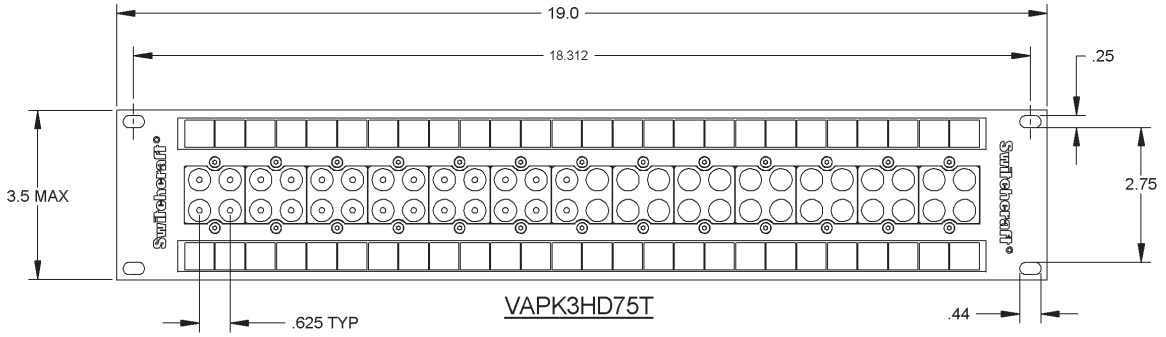


VAPK3HD75T

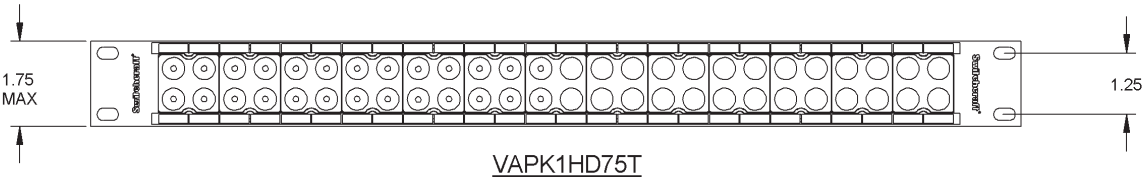


VAPK1HD75T

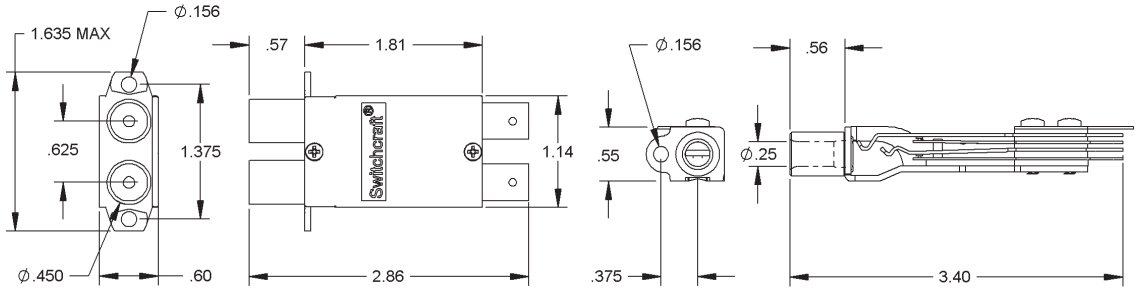


VIDEO JACK

YMT JACK

DIMENSIONS ARE FOR REFERENCE ONLY Inch (mm)

Switchcraft®
www.switchcraft.com
5555 North Elston Avenue / Chicago, IL 60630
Phone: 773-792-2700 / Fax: 773-792-2129

# MVEZN Audio/Midsize Patchbay Series

## Features and Benefits

- Combines 16 midsize video jacks and 24 dual EZ Norm bantam jacks.
- Video jacks are rated from DC to 3.0 GHZ.
- Rugged, attractive anodized aluminum frame for increased reliability.
- All audio jacks utilize EZ Norm technology for easy normal reconfiguration. A simple twist of the normal cam changes the normal function from full, to half, to no normals.
- Cable tie bar removes weight off the rear terminations.
- Large designation strips for easy patch point identification.

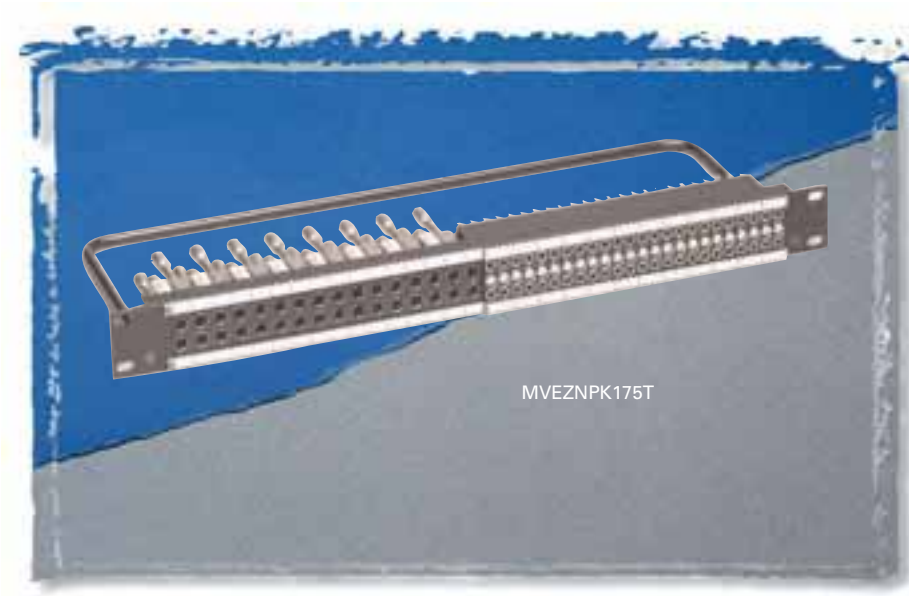


## Video Jack Specifications

**See page 39 for details**

## Audio Jack Specifications

**See page 10 for details**

**The MVEZN Series combines our popular MVJ midsize video jacks with our latest bantam jack, the EZ Norm. This patchbay has 16 video jacks and 24 dual EZ Norm bantam jacks. Perfect for application where a full video and audio patchbay are unnecessary. The video jacks are rated up to 3.0GHz, and the audio jacks meet 30,000 cycles, both in insertion/withdrawals and with the normal cam.**

Part Number: MVEZNPK175T

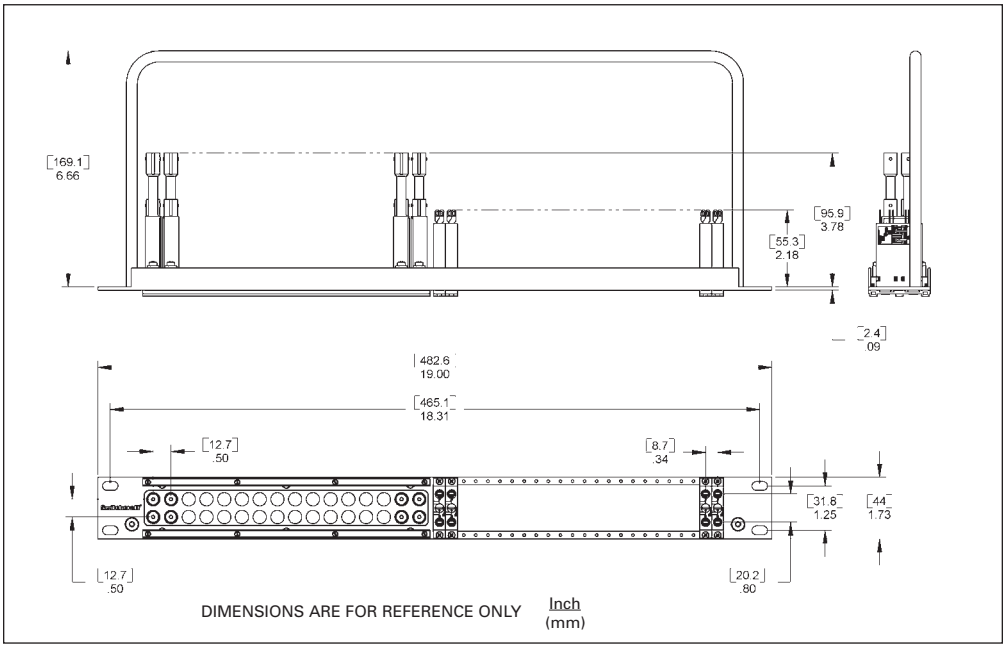

# MBPK Video/Audio Patchbay Series



## Features and Benefits

- Combines 16 midsize video jacks and 48 TT bantam audio jacks.
- Video jacks are rated from DC to 3.0 GHZ.
- All audio jacks are nickel-plated with steel frames and gold-plated cross-bar switching contacts.
- Rugged, attractive anodized aluminum frame for increased reliability.
- Large designation strips for easy patch point identification.
- Audio jacks rated at 30,000 cycles.

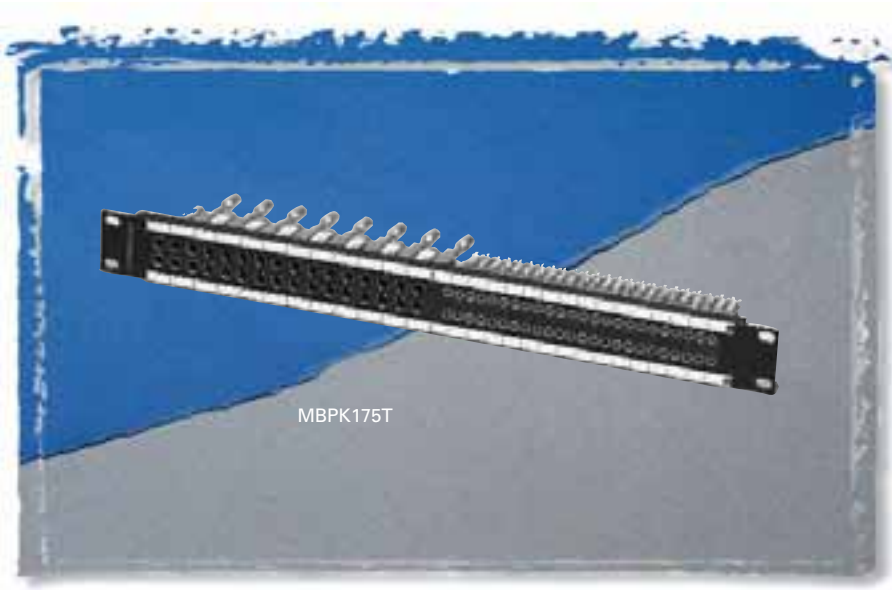


## Video Jack Specifications

**See page 39 for details**

## Audio Jack Specifications

**See page 69 for details**

### Materials

Frame: Aluminum, black anodized

**The MBPK Series combines our popular MVJ midsize video jacks with our standard nickel-plated, steel frame audio jacks. This patchbay combines 16 midsize video jacks with 48 TT bantam audio jacks. Perfect for applications where a full video and audio patchbay are unnecessary. The video jacks are rated up to 3.0GHz, and the audio jacks meet 30,000 cycles. The audio jacks have T, R, S, TN, and RN terminals, and feature gold-plated contacts and flared solder terminals.**

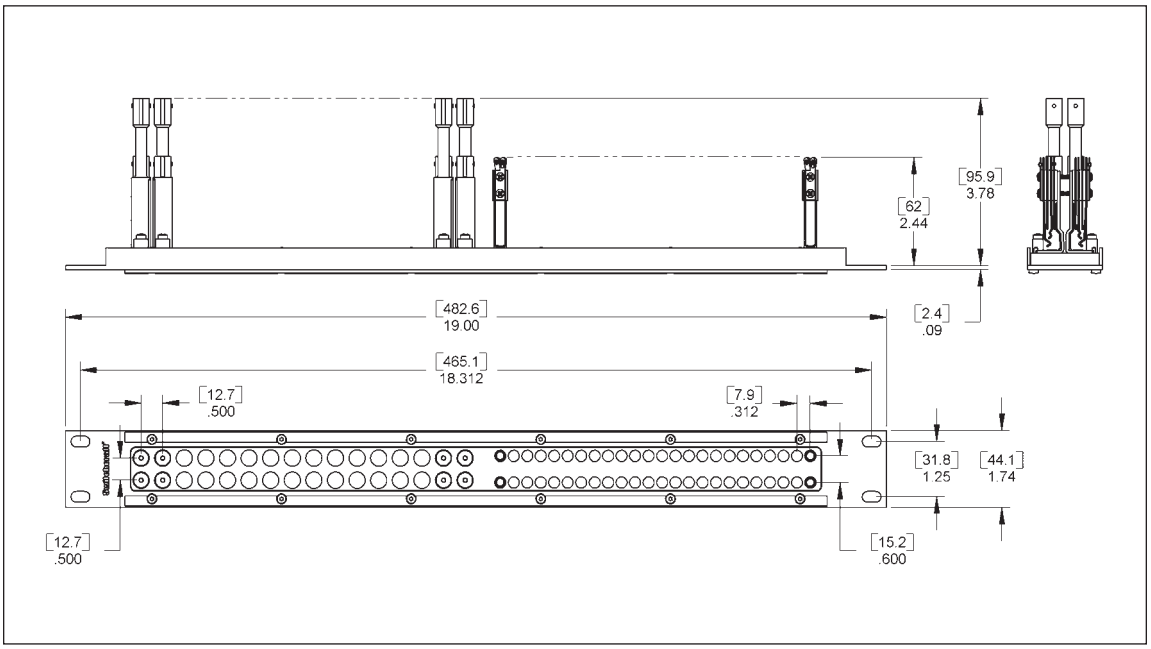


DIMENSIONS ARE FOR REFERENCE ONLY Inch (mm)

Switchcraft®
www.switchcraft.com
5555 North Elston Avenue / Chicago, IL 60630
Phone: 773-792-2700 / Fax: 773-792-2129

# PATCHCORDS/MOLDED CABLES



## Audio and Video Patchcords

### Features and Benefits - Audio

- 110 ohm impedance-matched digital patchcords meet AES/EBU interface standards for digital patching
- Available with a variety of plug terminations, plug finishes, cord lengths and cable colors, the patchcords offer design flexibility
- Premium quality cable insures high reliability and greater flexibility

### Specifications

Standard plug terminations are single 3-conductor 1/4" and TT®
Nickel-plated plugs (standard), brass and gold-plated (optional)
Cable jacket material is PVC. Black is standard with other colors available

### Features and Benefits - Video

- Designed and built to highest quality standards for efficient video signal transmission
- Cable type is RG59 (75W)
- Rugged nickel-plated handles with knurled area for positive finger grip
- Available in standard size or midsize styles

### Specifications

**Materials**

Housing: Nickel-plated, copper alloy
Contact Pin: Gold-plated, copper alloy
Boot: Thermoplastic, in black and colors

**A wide variety of audio patchcords and molded cable assemblies are available. Some of the more popular versions are the 18Q and 20Q Series for professional 1/4" patching, the TT* and TTD Series for TT or bantam AES/EBU digital patching. The VP and VMP Series offer exceptional performance for video signal patching.**

### Ordering Information

**Video Patchcords**

| Part Number | Type | Part Number | Type |
|---|---|---|---|
| VP3** | Standard | VMP2** | Midsize |
| VP4** | Standard | VMP3** | Midsize |
| VP5** | Standard | VMP4** | Midsize |
| VP6** | Standard | VMP5** | Midsize |
| VP7** | Standard | VMP6** | Midsize |
| VP8** | Standard | VMP7** | Midsize |
| VP9** | Standard | VMP8** | Midsize |
| VP10** | Standard | VMP9** | Midsize |
| VSPP | Standard | VMP10** | Midsize |
| VMP1** | Midsize | VMPP | Midsize |

When ordering, add the following for cable color: BK-Black, BL-Blue, R-Red, O-Orange, Y-Yellow, GN-Green, P-Purple, GY-Gray

## Ordering Information

| Part Number | Type | Plug Finger | Description |
|---|---|---|---|
| **Audio Patchcords** | | | |
| 18QD18 | 1/4" Mil-Type | Brass | 2 foot, black nylon jacket |
| 18QF18 | 1/4" Mil-Type | Brass | 3 foot, black nylon jacket |
| 18QH18 | 1/4" Mil-Type | Brass | 4 foot, black nylon jacket |
| 20QD20N* | 1/4" Mil-Type | Nickel | 2 foot, nylon jacket |
| 20QF20N* | 1/4" Mil-Type | Nickel | 3 foot, nylon jacket |
| 20QH20N* | 1/4" Mil-Type | Nickel | 4 foot, nylon jacket |

When ordering, add the following for cable color: 0-Black, 2-Red, 5-Green, 6-Blue

| | | | |
|---|---|---|---|
| TT122 | TT or Bantam | Brass | 1 foot, molded gray jacket |
| TT124 | TT or Bantam | Brass | 2 foot, molded gray jacket |
| TT126 | TT or Bantam | Brass | 3 foot, molded gray jacket |
| TT127 | TT or Bantam | Brass | 4 foot, molded gray jacket |
| TT128 | TT or Bantam | Brass | 5 foot, molded gray jacket |
| **AES/EBU 110 Ohm Digital Single Plug Patchcords** | | | |
| TT1* | TT or Bantam | Nickel | 1 foot, molded |
| TT2* | TT or Bantam | Nickel | 2 foot, molded |
| TT3* | TT or Bantam | Nickel | 3 foot, molded |
| TT4* | TT or Bantam | Nickel | 4 foot, molded |
| TT5* | TT or Bantam | Nickel | 5 foot, molded |
| TT6* | TT or Bantam | Nickel | 6 foot, molded |
| TT7* | TT or Bantam | Nickel | 7 foot, molded |
| TT8* | TT or Bantam | Nickel | 8 foot, molded |
| TT9* | TT or Bantam | Nickel | 9 foot, molded |
| TT10* | TT or Bantam | Nickel | 10 foot, molded |
| **AES/EBU 110 Ohm Digital, or RS422 Dual Plug Patchcords** | | | |
| TTD1* | TT or Bantam | Nickel | 1 foot, molded |
| TTD2* | TT or Bantam | Nickel | 2 foot, molded |
| TTD3* | TT or Bantam | Nickel | 3 foot, molded |
| TTD4* | TT or Bantam | Nickel | 4 foot, molded |
| TTD5* | TT or Bantam | Nickel | 5 foot, molded |
| TTD6* | TT or Bantam | Nickel | 6 foot, molded |
| TTD7* | TT or Bantam | Nickel | 7 foot, molded |
| TTD8* | TT or Bantam | Nickel | 8 foot, molded |
| TTD9* | TT or Bantam | Nickel | 8 foot, molded |
| TTD10* | TT or Bantam | Nickel | 10 foot, molded |

When ordering, add the following for cable color: BK-Black, BL-Blue, R-Red, O-Orange, Y-Yellow, GN-Green, P-Purple, GY-Gray

## Ordering Information

| Part No. | Description |
|---|---|
| **Molded MIDI Cables** | |
| MD3 | 3 foot, 5 pin DIN, molded black |
| MD6 | 6 foot, 5 pin DIN, molded black |
| MD10 | 10 foot, 5 pin DIN, molded black |
| MD15 | 15 foot, 5 pin DIN, molded black |

Uses 4 cond., 24 awg, PVC outer jacket, braided shielded cable

| | |
|---|---|
| **1/4" Cables** | |
| 05AD05 | 2 foot, mono, male to male |
| 05AK05 | 6 foot, mono, male to male |
| 05AN05 | 10 foot, mono, male to male |
| 05AU05 | 25 foot, mono, male to male |
| 05AN15 | 10 foot, mono, male to RA male |
| 05AN80 | 10 foot, mono, male to female |
| 05AU80 | 25 foot, mono, male to female |
| 10BF10 | 3 foot, stereo, male to male |
| 10BK10 | 6 foot, stereo, male to male |
| 10BN10 | 10 foot, stereo, male to male |
| 15AK15 | 6 foot, mono, RA male to RA male |
| **RCA** | |
| 25AF25 | 3 foot, male to male |
| 25AK25 | 6 foot, male to male |
| 25AN25 | 10 foot, male to male |
| 25AK82 | 6 foot, male to female |
| 30AK30 | 6 foot, RA male to RA male |
| 30AN30 | 10 foot, RA male to RA male |
| 30AR30 | 15 foot, RA male to RA male |
| **1/4" to RCA** | |
| 05AK25 | 6 foot, 1/4" male to RCA male |
| 05AN25 | 10 foot, 1/4" male to RCA male |

Uses either single or 2 cond, 22awg, PVC outer jacket, braided shielded cable

DIMENSIONS ARE FOR REFERENCE ONLY Inch (mm)



5555 North Elston Avenue / Chicago, IL 60630
Phone: 773-792-2700 / Fax: 773-792-2129

# Q-G® Audio Connector Series

## A, AA, AAA Cord Style Series

Switchcraft offers a wide range of cord style XLR connectors.

The A Series features a dual pressure plate strain relief mechanism to securely fasten the connector to the cable. The A Series is also available with FAS-DISCONNECT detent.

The AA Series features a 1-piece strain relief mechanism that clamps onto the outer jacket of the cable.

The AAA Series features a twist-on handle with a built-in strain relief mechanism and a pre-loaded insert. The new R Series offers the same strain relief system as the AAA Series.

### Specifications

**Electrical**

Contact Resistance: 50 milliohm maximum, per pole
Current Rating @ 125VAC: 3 pole - 15A, 4 pole -10A, 5 & 6 pole - 7.5A, 7 pole - 5A
Insulation Resistance: 1,000 MW, minimum
Dielectric Withstanding Voltage: 1,000 V (rms)
Capacitance: ≤3pF between pins and ≤6 pF between pins and shell, maximum

**Mechanical**

Insertion/Withdrawal Forces: 10 lbs. maximum, 8 lbs. nominal/ 7 lbs. maximum, 5 lbs. nominal

**Materials**

Shell: Die-Cast zinc with nickel finish or black chrome
Handle: Die cast with nickel finish or black chrome. Also black thermoplastic handle available
O Ring: TPR (Thermoplastic rubber).
Insert Insulation: Molded thermoplastic
Socket Contacts: Silver plated copper alloy tarnish resistant; bifurcated on 3 and 4 contact types. Gold is available.
Pin Contacts: Silver plated copper alloy.

**See Page 56 for Mechanical Drawings**

Resists tarnishing, and provides excellent electrical conductivity. Gold is available.
Latch lock: High strength die cast zinc
Multi-finger cable clamp and rubber gasket: TPR (Thermoplastic plastic & rubber)
Flex Relief: TPR (Thermoplastic rubber)

### Ordering Information

| Part Number | Style | Finish | Pins/ Contacts | Notes |
|---|---|---|---|---|
| A*F, A*M | Cord | Nickel | Silver | Standard Cable Clamp |
| A*FB, A*MB | Cord | Black | Silver | Standard Cable Clamp |
| A*FBAU, A*MBAU | Cord | Black | Gold | Standard Cable Clamp |
| A*FL, A*ML | Cord | Nickel | Silver | Standard cable clamp, large flex relief |
| AA*F, AA*M | Cord | Nickel | Silver | One piece cable clamp |
| AA*FB, AA*MB | Cord | Black | Silver | One piece cable clamp |
| AA*FBAU, AA*MBAU | Cord | Black | Gold | One piece cable clamp |
| AA*FL, AA*ML | Cord | Nickel | Silver | One piece cable clamp, large flex relief |
| AAA*FZ, AAA*MZ | Cord | Nickel | Silver | Twist-on metal handle |
| AAA*FBZ, AAA*MBZ | Cord | Black | Silver | Twist-on metal handle |
| AAA*FBAUZ, AAA*MBAUZ | Cord | Black | Gold | Twist-on metal handle |
| AAA*FPZ, AAA*MPZ | Cord | Nickel | Silver | Twist-on plastic handle |
| AAA*FPBZ, AAA*MPBZ | Cord | Black | Silver | Twist-on plastic handle |
| AAA*FPBAUZ, AAA*MPBAUZ | Cord | Black | Gold | Twist-on plastic handle |

* Available 3 - 7 pins or contacts

# Q-G® Audio Connector Series



## B, C, D, E Panel Style Series

Switchcraft also offers a wide range of panel mount connectors.

The B Series features a round housing with a threaded collar for mounting. The female version requires a spanner wrench to tighten the connector to the chassis. Both male and female are available with black finish.

The C Series is another round housing panel mount, which has 0.140" mounting holes requiring #5-40 screws to mount.

The D Series, our most popular version, is a rectangle housing panel mount. The standard Rawall finish resists scratching, while the optional satin finish offers a smooth finish for mounting on a brushed finished chassis.

The E Series offers a panel mount with quick release inserts. A small screwdriver is used to remove the inserts, allowing for easy gender changes. The male and female E Series fit into the same panel cut-outs.

The E Series is also available with PC terminals. Contact the factory for details.

### Ordering Information

| Part Number | Style | Finish | Pins/ Contacts | Notes |
|---|---|---|---|---|
| B*F, B*M | Panel | Nickel | Silver | Threaded Collar |
| B*FB, B*MB | Panel | Black | Silver | Threaded Collar |
| C*F, C*M | Panel | Nickel | Silver | Uses #5-40 mounting screws |
| C*FB, C*MB | Panel | Black | Silver | Uses #5-40 mounting screws |
| D*F, D*M | Panel | Nickel | Silver | Uses #5-40 mounting screws |
| D*FB, D*MB | Panel | Black | Silver | Rectangle housing |
| D*FBAU, D*MBAU | Panel | Black | Gold | Rectangle housing |
| D*FS, D*MS | Panel | Nickel | Silver | Rectangle housing, smooth finish |
| E3FSC, E3MSC | Panel | Nickel | Silver | Male/Female same panel cut-out |
| E3FSCB, E3MSCB | Panel | Black | Silver | Male/Female same panel cut-out |
| E3FSCBAU, E3MSCBAU | Panel | Black | Gold | Male/Female same panel cut-out |

* Available 3 - 7 pins or contacts

**See Page 57 for Mechanical Drawings**



5555 North Elston Avenue / Chicago, IL 60630
Phone: 773-792-2700 / Fax: 773-792-2129

# Q-G® Audio Connector Series

## J, K, P, R, T Wallplate, Gooseneck, Panel & Cord Style Series

The J and K Series are wallplates using the D Series receptacles pre-mounted. Available in single or dual connector versions.

The PD Series is a plastic panel mount series, using 94V-0 rated material. Both male and female mount into the same panel cut-out and are available in solder cup, straight PC, and right angle PC terminals.

Switchcraft also offers gooseneck connectors and cord plugs with on-off switches. The P Series are gooseneck connectors available in male or female, with optional black finishes. The male has external 5/8-27 threads, the female has internal 5/8-27 threads.

The new R Series incorporates the same strain relief system as the AAA Series. The insert can be offset at 45˚ to accommodate a wide variety of applications.

The T Series is similar to the A Series female cord plug, but offers a DPDT (2-C) locking on-off switch. The slide switch is rated at 500mA, 125V.

### Ordering Information

| Part Number | Style | Finish | Pins/ Contacts | Notes |
|---|---|---|---|---|
| J3FS | Wallplate | Nickel | Silver | Single D3F |
| K3FS | Wallplate | Nickel | Silver | Dual D3F's |
| P*F, P*M | Gooseneck | Nickel | Silver | Female ext. threads, male int.threads |
| P*FB, P*MB | Gooseneck | Black | Silver | Female ext. threads, male int.threads |
| PD3FSC1, PD3MSC1 | Panel | Black | Silver | Plastic Housing |
| PD3FSC1AU, PD3MSC1AU | Panel | Black | Gold | Plastic Housing |
| R*FZ, R*MZ | Cord | Nickel | Silver | Right Angle |
| R*FBZ, R*MBZ | Cord | Black | Silver | Right Angle |
| R*FBAUZ, R*MBAUZ | Cord | Black | Gold | Right Angle |
| T3F | Cord | Nickel | Silver | On-off switch |

* Available 3 - 7 pins or contacts

**See Pages 58 and 59 for Mechanical Drawings**

# Tini-Q-G® Connector Series

## Tini-Q-G® Cord & Panel Style Series

The Tini-QG Series is a miniature version of the standard QG Series. These "mini-XLR's" come in a wide variety of configurations. The standard TA Series cord plugs are available in 3-6 pins or contacts. The L versions, with their larger strain reliefs, are available in 3-8 pins or contacts.The TB and TY Series are panel mount connectors. The TB Series is a male connector, featuring a round panel cut-out and 3-8 pins. The TY Series is a female connector, featuring a rectangular housing and 3-5 contacts. The TA and TB Series are available with a black finish. Gold-plated contacts are available on all series. Contact the factory for details.

### Materials

Housing: Plugs and Male Receptacles — Copper alloy, nickel-plated; Female Receptacles — Die-cast zinc, nickel-plated
Black Tini-Q-G® Housing: Copper alloy, black chrome-plated
Pin and Socket Contacts: Copper alloy, silver-plated
Flex Relief: Molded black thermoplastic elastomer
Latch Button: Molded black thermoplastic
Release Lever and Mounting Washer: Steel, nickel-plated
Standoff/Ground Terminal and Cable Clamp: Steel, electrotinned
Inserts and Insulating Spacer: Molded, high strength thermoplastic
Latch (Female): Copper alloy, nickel-plated
Mounting Nut: Copper alloy, nickel-plated

### Ordering Information

| Part Number | Style | Finish | Pins/ Contacts | Notes |
|---|---|---|---|---|
| TA*F, TA*M | Cord | Nickel | Silver | Available in 3 - 6 pins or contacts |
| TA*FL, TA*ML | Cord | Nickel | Silver | Accommodates large cable, available in 3 - 8 pins or contacts |
| TA*FB, TA*MB | Cord | Black | Silver | Available in 3 - 6 pins or contacts |
| TB*M | Panel | Nickel | Silver | Male, round flange, threaded, available in 3 - 8 pins or contacts |
| TB*MB | Panel | Black | Silver | Male, round flange, threaded, available in 3 - 8 pins or contacts |
| TY*F | Panel | Nickel | Silver | Female, rectangle flange, available in 3 - 5 pins or contacts |

**See Page 59 for Mechanical Drawings**

### Specifications

#### Electrical

Contact Resistance: .010 ohms maximum after life (and after salt spray)
Current Rating (Carry Only): 5A, 125 VAC (4A, 125 VAC on 5 circuit) based on 30˚C maximum
Insulation Resistance: 510,000 megohms minimum @ 500 VDC (initial); 10,000 megohms minimum (after humidity test)
Dielectric Strength: 1,000V (rms)

#### Mechanical

Life: 5,000 operations minimum
Solderability Standard: Meets EIA RS-186-9E
Mechanical Shock: Meets Mil-Std-202, method 213B
Vibration: Meets Mil-Std-202, method 201A
Wire Size: #22 wire gauge solid; #24 wire gauge stranded

#### Environmental

Thermal Range: -55˚C to +85˚C
Humidity: Meets Mil-Std-202, method 106D
Thermal Shock: Meets Mil-Std-202, method 107D
Salt Spray: Meets Mil-Std-202, method 101

Switchcraft®
www.switchcraft.com
5555 North Elston Avenue / Chicago, IL 60630
Phone: 773-792-2700 / Fax: 773-792-2129

# HPC Connector Series

## HPC Panel Style Series

The HPC Series is a complete line of high power loudspeaker connectors that are completely compatible with the Neutrik® Speakon® 4 pole connector series. Included in the series are round and rectangular panel mounts, straight cord plugs, right angle cord plugs, and in-line cord plug, plus a barrel adapter.

The HPC panel mounts come with two different flange depths, either 0.100" or 0.200" depths. The 0.200" depth allows for easy rear mounting of the connector and maintains proper mating with the cord plug. Also, the panel mounts have two different Faston® terminal sizes, 0.187" and 0.250" wide. Both are rated at 50A, per UL 1977. The PC mount versions have either straight, right angle, or right angle with a mounting post. They are rated at 30A per UL 1977. The right angle PC mount version with the post allows for snap-in placement onto the PC board during wave soldering.

The HPC cord plugs are offered in straight, right angle, and an in-line version. All have 0.250" Faston® terminals, rated at 50A per UL 1977, which makes it easy to swap out plugs. The unique feature of the cord plugs is their "push to lock" design. They do not require a 1/4 turn to engage the contacts – simply push the connector in like an XLR. This feature eliminates the need to remember to turn the connector to make contact with the contacts. To disengage, simply push the latch lever forward and pull the connector out. The straight cord plug uses a twist on handle, while the in-line and right angle cord plugs use a snap-in handle. The in-line connector mates with both straight and right angle cord plugs.

For those who find it more convenient, we also offer a barrel adapter which mates with either straight or right angle cord plugs.

### Ordering Information

| Part Number | Style | Notes |
|---|---|---|
| HPCP41F | Panel | Rectangle, 0.100" flange depth, 0.250" faston terms |
| HPCP42F | Panel | Rectangle, 0.200" flange depth, 0.250" faston terms |
| HPCP41F1 | Panel | Rectangle, 0.100" flange depth, 0.187" faston terms |
| HPCP42F1 | Panel | Rectangle, 0.200" flange depth, 0.187" faston terms |
| HPCP410PC | Panel | Rectangle, 0.100" flange depth, straight PC terms |
| HPCP420PC | Panel | Rectangle, 0.200" flange depth, straight PC terms |
| HPCP410RA | Panel | Rectangle, 0.100" flange depth, right angle PC terms |
| HPCP420RA | Panel | Rectangle, 0.200" flange depth, right angle PC terms |
| HPCPR41F | Panel | Round, 0.100" flange depth, 0.250" faston terms |
| HPCPR42F | Panel | Round, 0.200" flange depth, 0.250" faston terms |
| HPCPR41F1 | Panel | Round, 0.100" flange depth, 0.187" faston terms |
| HPCPR42F1 | Panel | Round, 0.200" flange depth, 0.187" faston terms |
| HPCPR410PC | Panel | Round, 0.100" flange depth, straight PC terms |
| HPCPR420PC | Panel | Round, 0.200" flange depth, straight PC terms |

**See Pages 61 and 62 for Mechanical Drawings**

Speakon® is a registered trademark of Neutrik Inc.

# HPC Connector Series
## HPC Cord, & Adapter Style Series

### Ordering Information

| Part Number | Style | Notes |
|---|---|---|
| HPCC4F | Cord | Straight with 0.250" faston terms |
| HPCI4F | Cord | Inline with 0.250" faston terms |
| HPCC4RAF | Cord | Right angle with 0.250" faston terms |

**See Page 62 for Mechanical Drawings**

### Specifications

**Mechanical**
**(Panel and Cord Mounts)**

Shock: Per Mil-Std 202, Method 213B, Cond. K
Vibration: Mil-Std 202, Method 201A
Life: 1,000 rotational cycles
Cable Range (cord mount): 10AWG, 0.560" cable OD maximum

**Electrical**
**(Panel and Cord Mounts)**

Voltage Rating: 1,500 AC RMS, per Mil-Std 202, Method 301
Current Rating (Faston® terminals): 50A RMS w/10AWG wire, normal ambient, per UL 1977
Current Rating (PC terminals): 30A per UL 1977
Contact Resistance: 1mΩ, 1.5mΩ after 1,000 insertion/withdrawals
Insulation Resistance: > 2T Ω

**Environmental**
**(Panel and Cord Mounts)**

Salt Spray: Mil-Std 202, Method 101D, Cond. B
Thermal Shock: Mil-Std 202, Method 107G
Temperature Limits: -55˚C to +85˚ C
Moisture Resistance: Mil-Std. 202, Method 106E
Life @ Ambient Temperature: Mil-Std 202, Method 108A
Touchproof: IEC 65 and 1010-1
IP Rating: IEC 529, IP 25

**Materials**
**(Panel and Cord Mounts)**

Housings: Thermoplastic UL 94V-0 rated
Seal Rings: Thermoplastic rubber
Contacts: Silver-plated over copper alloy


5555 North Elston Avenue / Chicago, IL 60630
Phone: 773-792-2700 / Fax: 773-792-2129

# CONNECTORS



## EH Series Receptacles

The EH Series consist of different styles of popular connectors in our E Series housing. This allows the end user to punch one single hole size and populate wall plates, gang assemblies with different types of connectors. Connector styles include BNC feed-throughs, RCA feed-throughs, USB feed-throughs, IEEE 1394 Firewire feed-throughs, BNC to solder cup, and RCA to BNC.

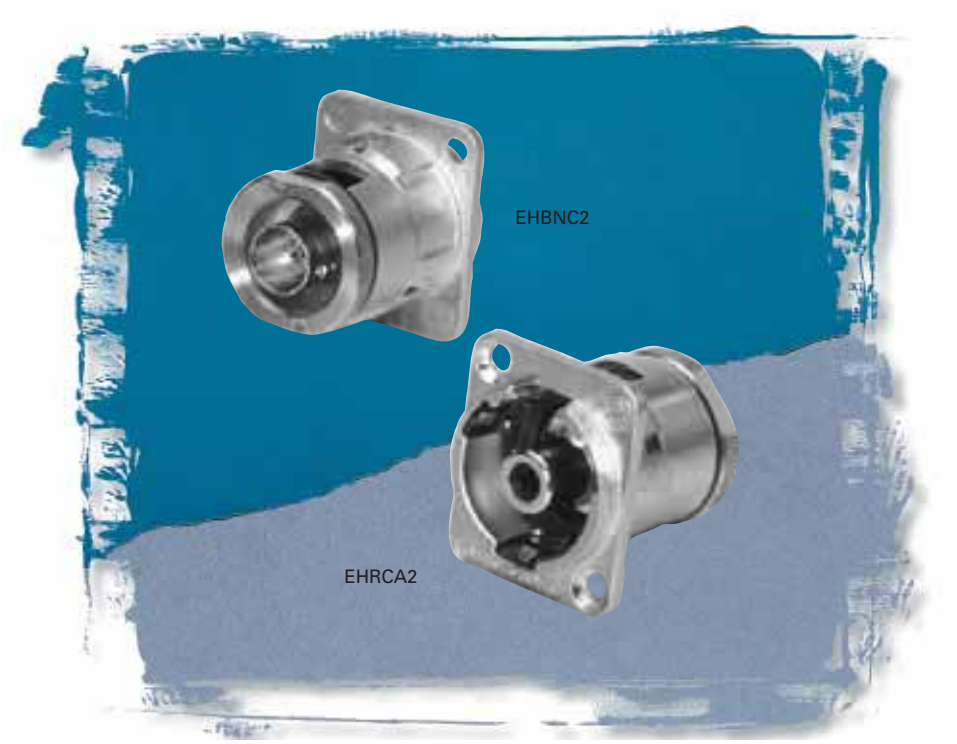


### Features

- Utilizes same panel cut-out as E Series QG connectors
- Rugged metal shells
- Available with a wide variety of popular feed-through connectors

### Ordering Information

| Part Number | Description |
|---|---|
| EHBNC2 | BNC to BNC |
| EHBNCSC | BNC to solder cup |
| EHRCA2 | RCA to RCA |
| EHRCABNC | RCA to BNC |
| EHUSB2 | USB to USB |
| EH13942 | IEEE1394 to IEEE1394 |
| EHCAT62 | Cat6 to Cat6 |

**Note: For black finish add 'B' suffix**
**See Page 55 for Mechanical Drawings**

The 5-pin DIN connector has been adopted by the audio industry as the standard MIDI (Musical Instrument Digital Interface) connector. Switchcraft offers a wide variety of DIN and mini-DIN connectors, however, only the 5-pin DIN versions are shown in this catalog. The more popular versions used in the audio industry include straight metal, straight plastic, and right angle cord plugs, as well as metal chassis and plastic right angle PC mount versions.

The 2500 Series microphone connectors are still used in many retro-style microphones. Cable mount versions can accommodate cable OD's up to 0.281".

## Specifications

### Materials

Shell: Die-cast zinc alloy, nickel plated
Receptacle Mounting Flange: Steel
Receptacle Body: Plastic
Insert Material: Plastic
Socket Contacts: Tin-plated
Pin Contacts: Tin-plated
Switching Contacts: Silver-plated
Cable Relief Bushing: Soft plastic

## Ordering Information

| Part Number | Style | Notes |
|---|---|---|
| 05BL5M | Cord | Male, straight, metal handle |
| 05GM5M | Cord | Male, straight, plastic handle |
| 05DL5M | Cord | Male, right angle, metal handle |
| 57GB5F | Panel | Female |
| 57PC5F | Panel | Female, right angle, PC mount |
| 57PC5FS | Panel | Female, right angle, PC mount, shielded |
| 2501F | Cord | Female, single contact, locking collar |
| 2501M | Cord | Male, single contact, ext. threads |
| 2501MP | Panel | Male, single contact, ext. threads |

**See Page 60 for Mechanical Drawings**


5555 North Elston Avenue / Chicago, IL 60630
Phone: 773-792-2700 / Fax: 773-792-2129

# HP75BNC Series

## True 75 Ohm BNC Series

The HP75BNC Series is a true 75 Ohm impedance BNC connector series. All connectors meet stringent guidelines for top performance. The HP75BNC Series is available in a wide variety of cable types. All use standard crimping tools.

### Features and Benefits

- True 75 Ohm impedance
- Rugged nickel-plated, machined housings
- Gold-plated center pins enhance performance

### Specifications

**Electrical**

Contact Resistance: 75 Ohms
Voltage Rating: 500 Volts RMS
Return Loss: Less than -25 db at 3 GHz
Insulation Resistance: 5000 Megohms minimum

**Mechanical**

Lifecycles: 500 minimum
Center Contact Retention: 6 lbs. minimum
Coupling Mechanism: 100 lbs. minimum
Force to Engage: 2.5 lbs. maximum

**Environmental**

Thermal Range: -65˚C to 165˚C
Moisture Resistance: Mil Std 202
Corrosion: Mil Std 202
Flammability: UL 94-V0
Vibration: Mil Std 202
Solvent Resistance: Mil Std 202

**Finish**

Body/Bayonet: Nickel-plated, copper alloy
Center Conductor: 50 mi gold-plated copper alloy

**See Next Page for Mechanical Drawings**

### Ordering Information

| Part Number | Crimp Info | Cable Type |
|---|---|---|
| HP75BNC1 | Pin .041 Hex<br>Ferrule .255 | Belden 8241, 8279, 82241<br>Gepco VJ59U<br>Comm/Scope 5563 |
| HP75BNC2 | Pin .041 Hex<br>Ferrule .324 Hex | Belden 8281, 8281B, 9141, 88281, 9231, 8141, 9118, 9248<br>Gepco VP618PE, VP618PVC, VP6000<br>Comm/Scope 7501, 7506 |
| HP75BNC7 | Pin .041 Hex<br>Ferrule .278 Hex | Belden 1694A, 1695A, 87120, 89120, 9066, 9114, 9659<br>Gepco VSD2001, VSD2001TS<br>Comm/Scope 5729 ,5765, 2227K, 2227V, 2229V, 2275V, 2276V, 2279V |
| HP75BNC9 | Pin .041 Hex<br>Ferrule .255 Hex | Belden 1505A, 1506A, 8212, 8241F, 9167, 9259,<br>Gepco VPM2000, VPM2000TS, VPM2000TK<br>Comm/Scope 2000, 5553, 5565, 5572 |
| HP75BNC12 | Pin .041 Hex<br>Ferrule .178 Hex | Belden 1855A, 1865A<br>Gepco VDM230, VDM250, RGB230/250 Series<br>Comm/Scope 7537, 7538 |

# Connector Dimension Drawings



## True 75 Ohm BNC Series, EH Series

### HP75BNC Series

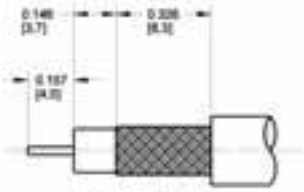

RECOMMENDED
CABLE STRIPPING DIMENSIONS

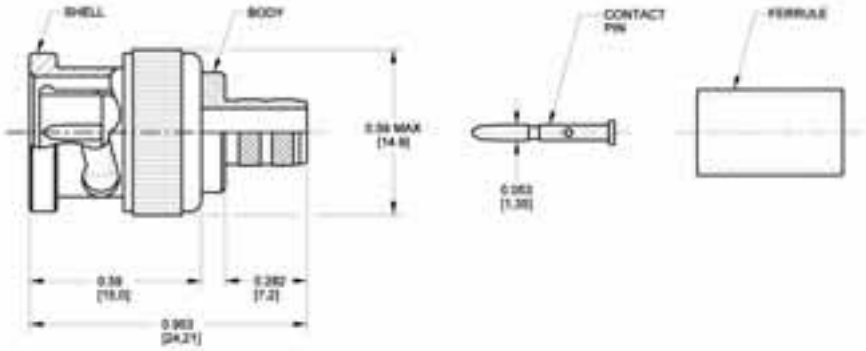


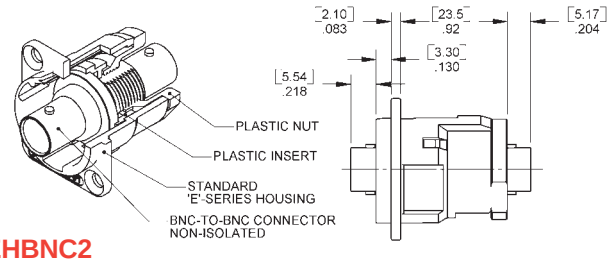


### EHBNC2

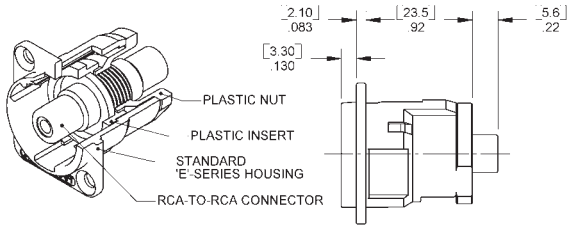


### EHRCA2

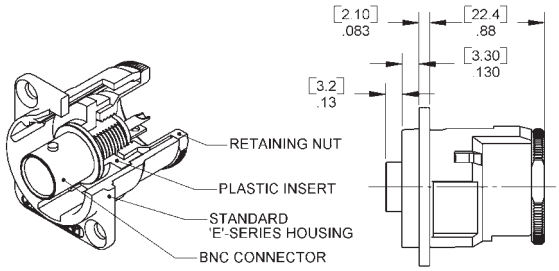


### EHBNCSC

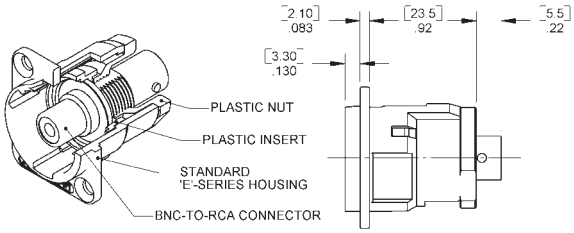


### EHRCABNC

DIMENSIONS ARE FOR REFERENCE ONLY $\frac{\text{Inch}}{(\text{mm})}$

Switchcraft®
www.switchcraft.com

5555 North Elston Avenue / Chicago, IL 60630
Phone: 773-792-2700 / Fax: 773-792-2129

# Connector Dimension Drawings

## Q-G® Audio - A, AA, AAA Series

### A*F

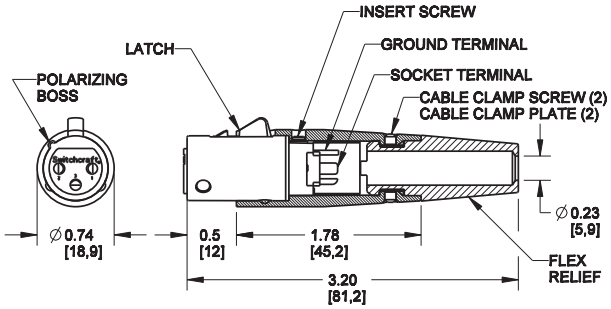


### A*M

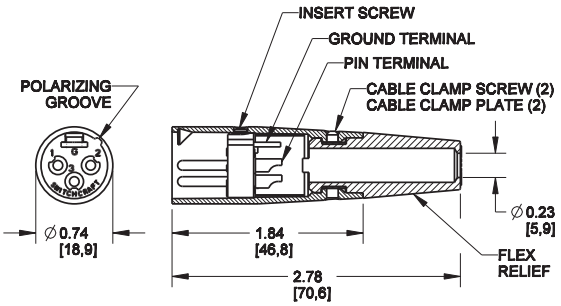


### AA*F

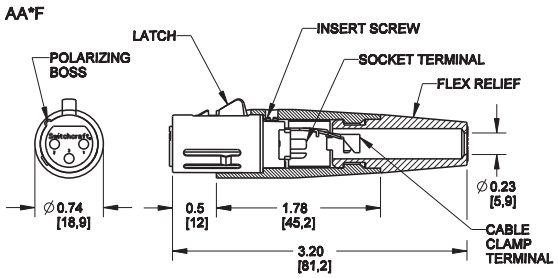


### AA*M

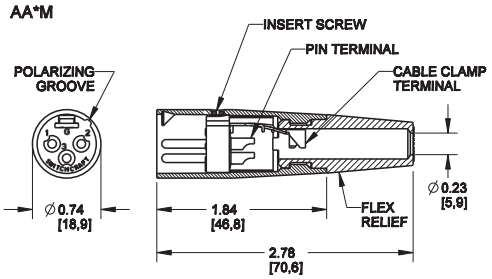


### AAA*FZ

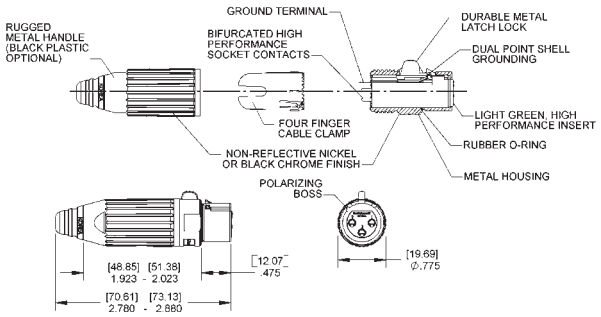


### AAA*MZ

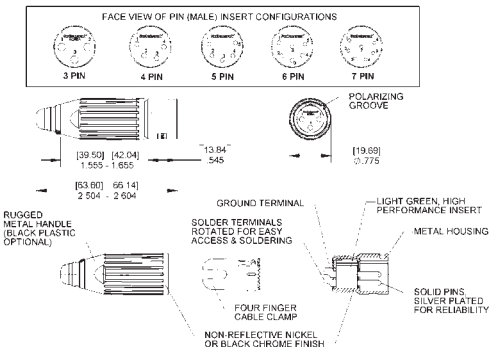

# Connector Dimension Drawings



## Q-G® Audio - B, C, D, E Series

### B*F

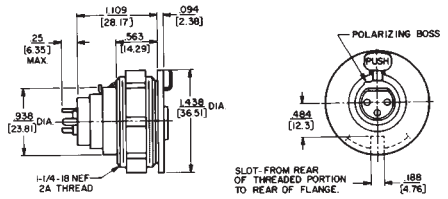


### B*M

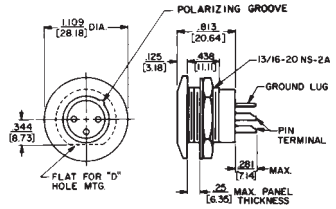


### C*F

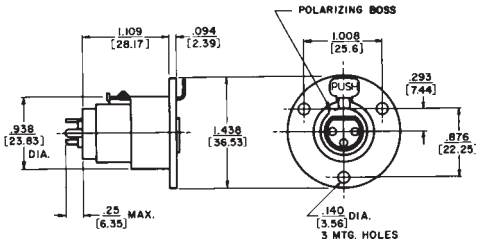


### C*M

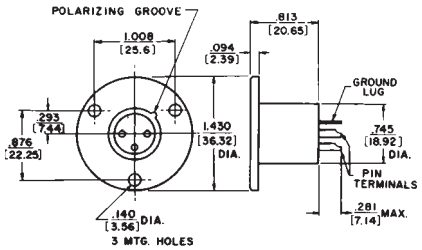


### D*F

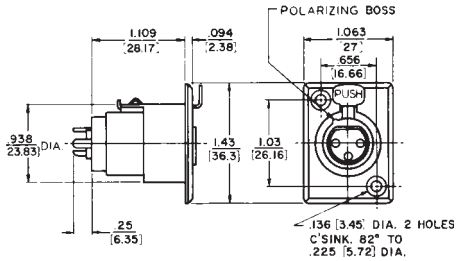


### D*M

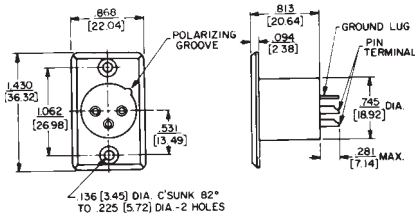


### E3FSC and E3MSC

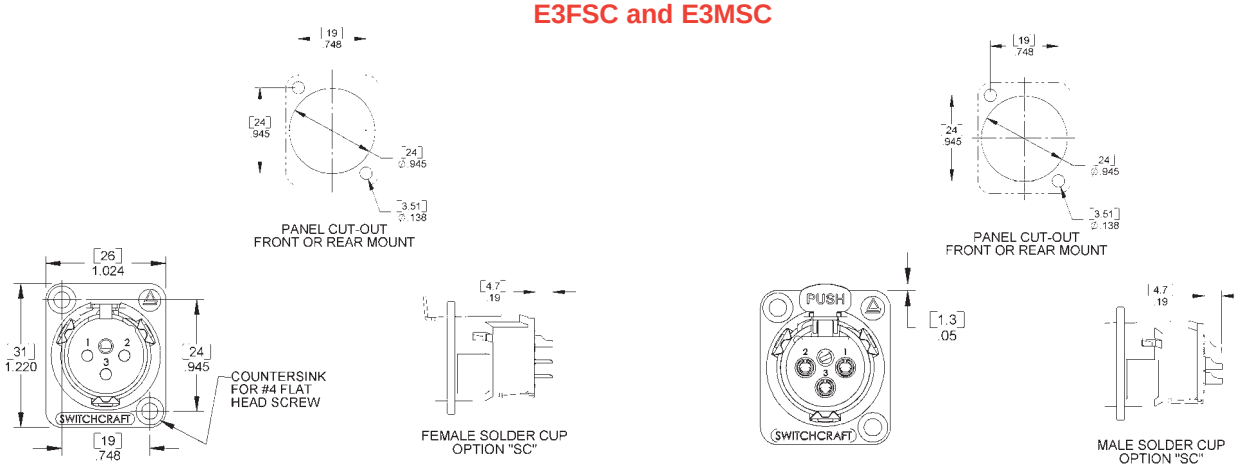


DIMENSIONS ARE FOR REFERENCE ONLY Inch (mm)

Switchcraft®
www.switchcraft.com
5555 North Elston Avenue / Chicago, IL 60630
Phone: 773-792-2700 / Fax: 773-792-2129

# Connector Dimension Drawings

## Q-G® Audio - J, K, P, R Series

### J3FS

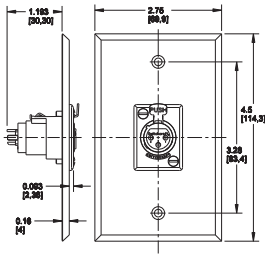

### K3FS

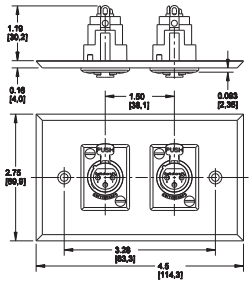

### PD3FSC1AU

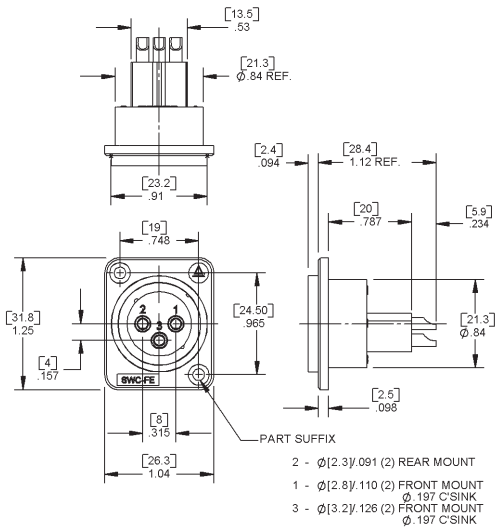


### PD3MSC1AU

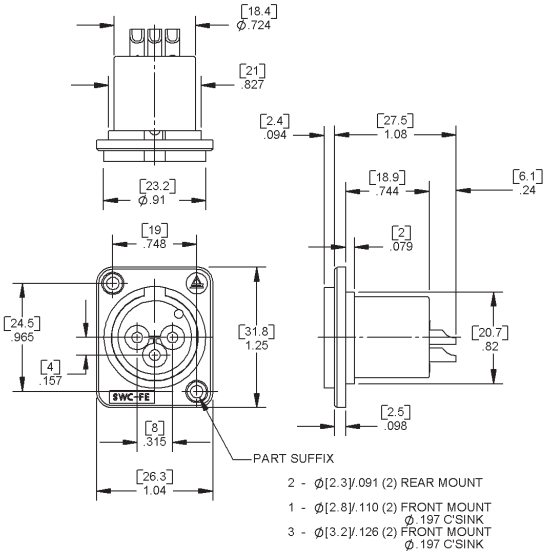


### R*MZ

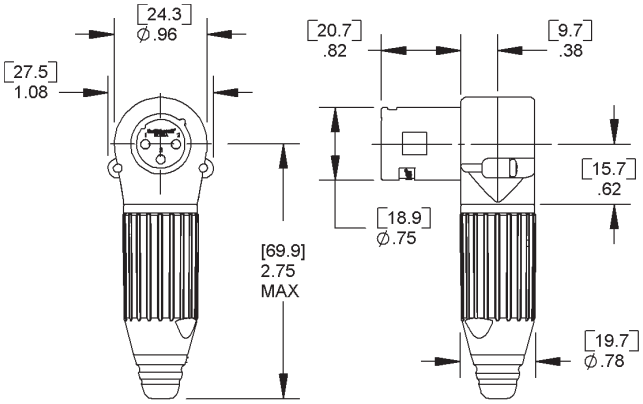


### R*FZ

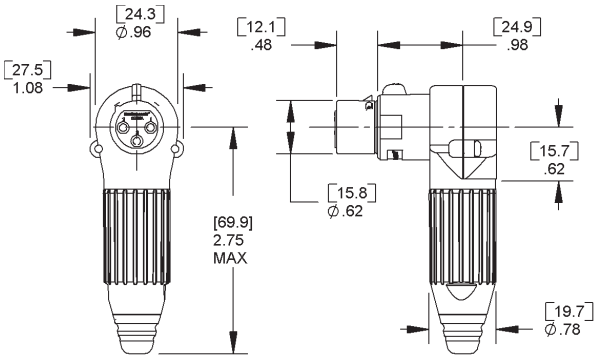


Switch

# Connector Dimension Drawings

## Q-G® Audio - T Series

### T3F

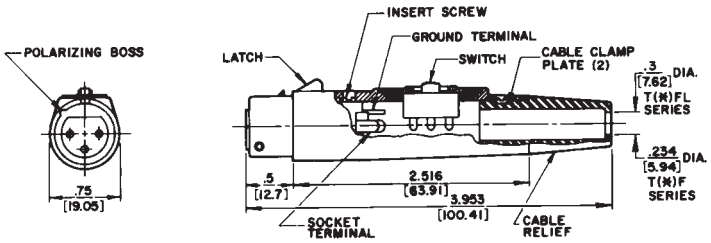


### TA*M

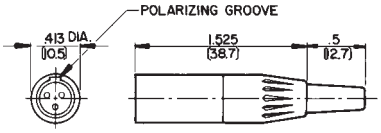


### TA*F

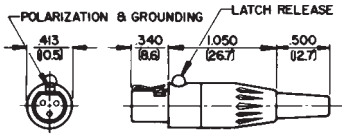


### TB*M

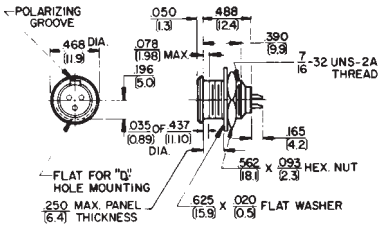


### TY*F

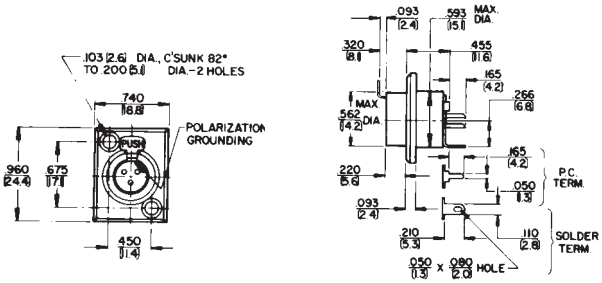


DIMENSIONS ARE FOR REFERENCE ONLY Inch (mm)

Switchcraft®
www.switchcraft.com
5555 North Elston Avenue / Chicago, IL 60630
Phone: 773-792-2700 / Fax: 773-792-2129

# Connector Dimension Drawings

## MIDI, Q-G® Audio - P Series

### 05BL5M

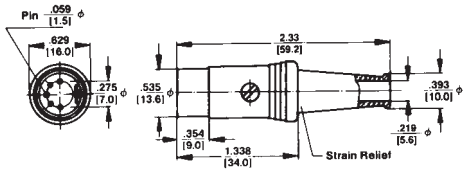


### 05GM5M

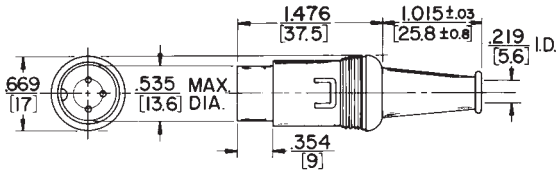


### 57GB5F

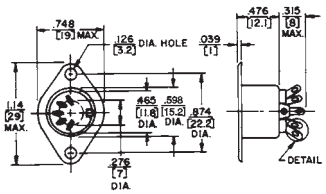


### 57PC5F

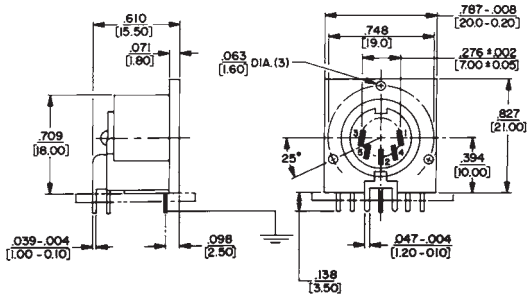


### P*F

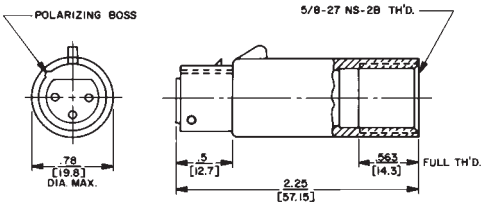


### P*M

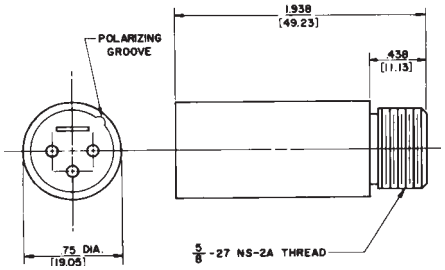


Switc

# Connector Dimension Drawings



## HPC Panel Style Series

### HPC

FOR ALL TERMINALS SHOWN, ROUND COUNTERPARTS EXIST

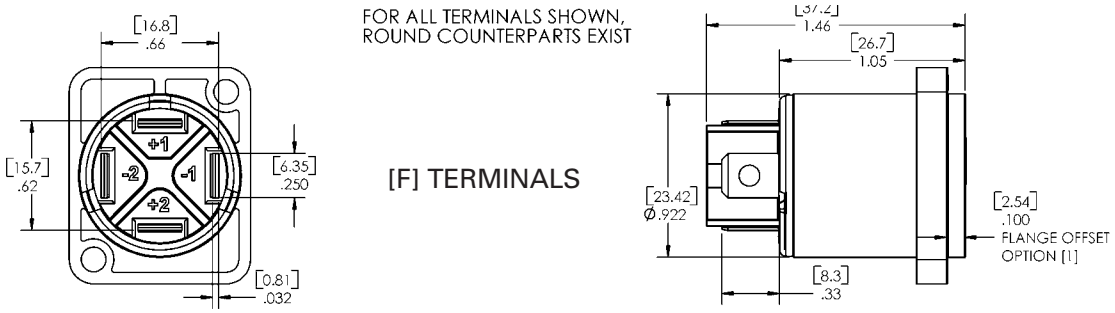


[F] TERMINALS

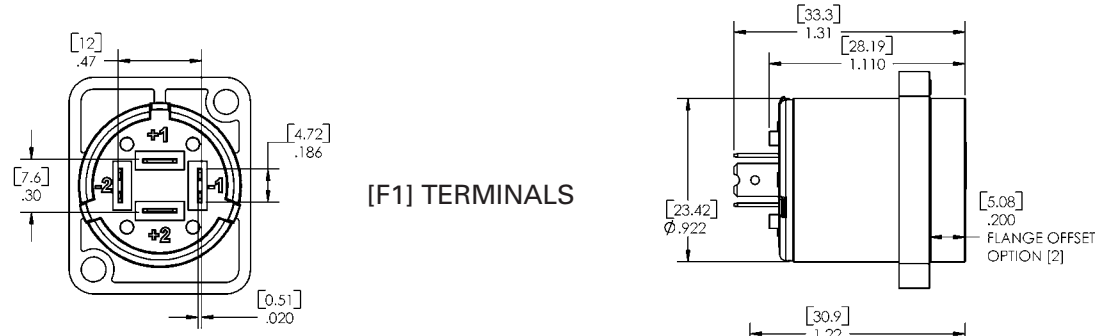


[F1] TERMINALS

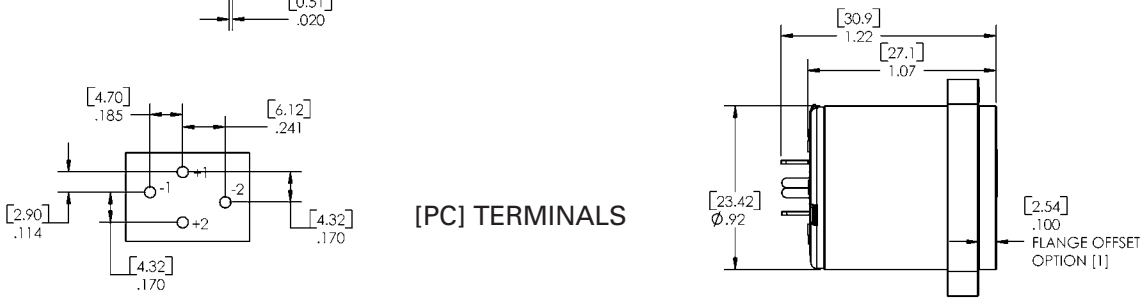


[PC] TERMINALS

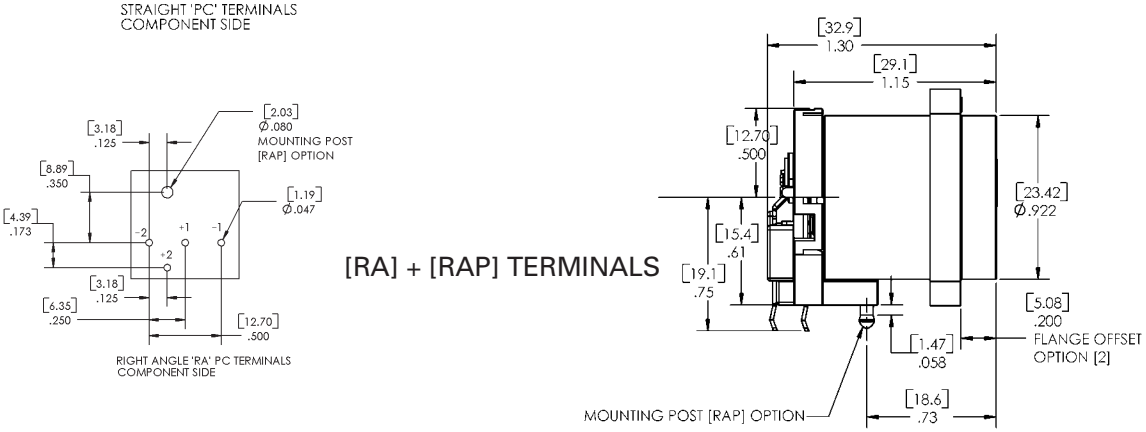


[RA] + [RAP] TERMINALS

DIMENSIONS ARE FOR REFERENCE ONLY Inch (mm)

Switchcraft®
www.switchcraft.com
5555 North Elston Avenue / Chicago, IL 60630
Phone: 773-792-2700 / Fax: 773-792-2129

# Connector Dimension Drawings

## HPC Panel Style Series

### HPC

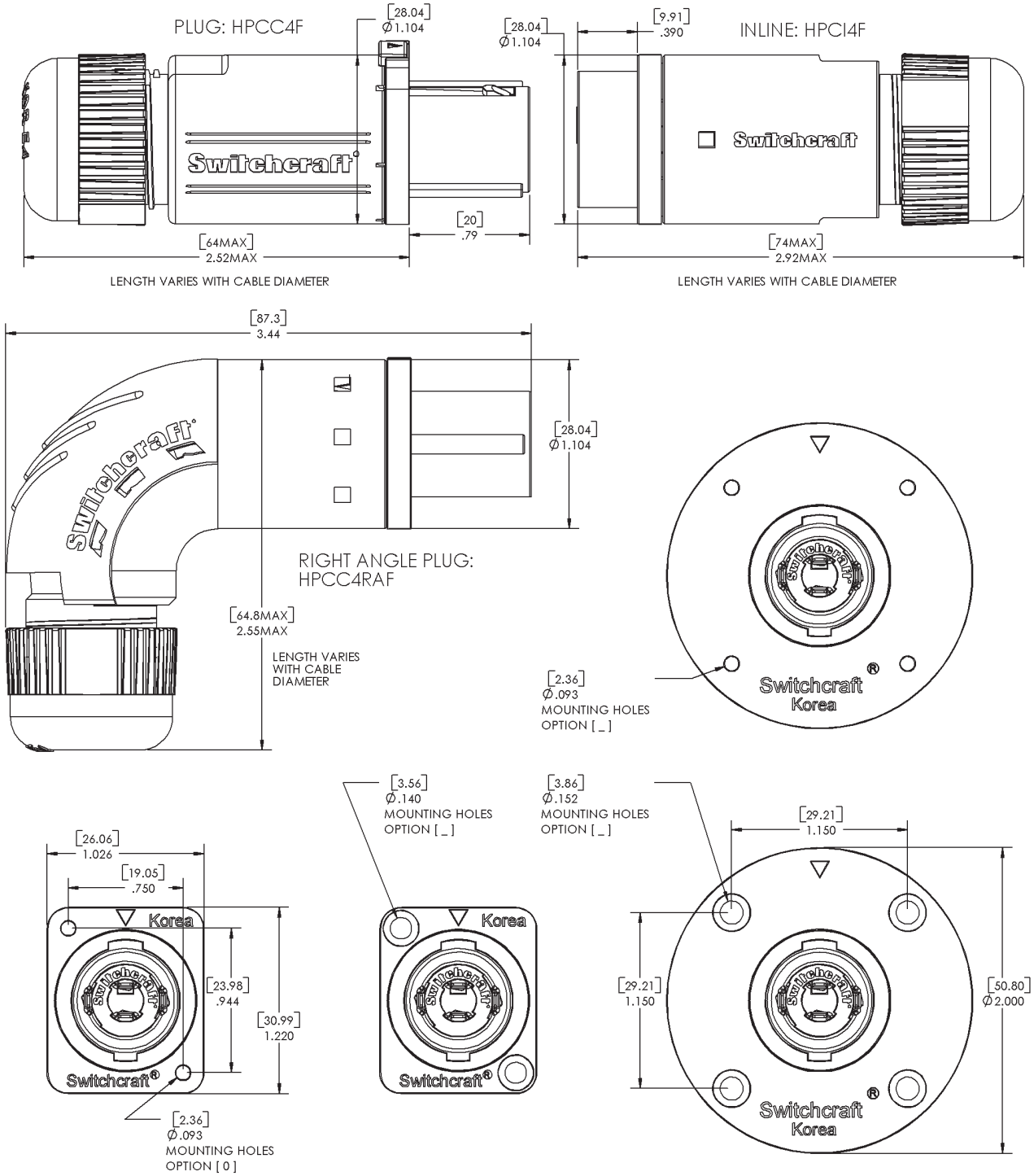

# AUDIO ADAPTERS

## XLR to XLR, RCA, 1/4," TQ-G Adapter Series



A wide variety of audio adapters are available from Switchcraft. Ranges include XLR to XLR, XLR to RCA, XLR to 1/4", along with a multitude of specialty adapters. Our DMX adapters allow users to adapt from 5 pin DMX controls to the more prevalent 3 pin XLR.

### Ordering Information

| Part Number | Description |
|---|---|
| **XLR to XLR** | |
| 389 | 3 Pin female to 3 pin female |
| 390 | 3 Pin male to 3 pin male |
| S3FM | 3 Pin male to 3 pin female |
| S3F5M | 3 Pin female to 5 pin male |
| S5F3M | 5 Pin female to 3 pin male |
| **XLR to RCA** | |
| 321 | 3 Pin female XLR to male RCA |
| 322 | 3 Pin female XLR to female RCA |
| 323 | 3 Pin male XLR to male RCA |
| 324 | 3 Pin male XLR to female RCA |
| **XLR to 1/4"** | |
| 383A | 3 Pin female XLR to female 1/4", 3 cond. |
| 384A | 3 Pin male XLR to female 1/4", 3 cond. |
| 386A | 3 Pin female XLR to male 1/4", 3 cond. |
| 387A | 3 Pin male XLR to male 1/4", 3 cond. |
| **XLR to TQ-G** | |
| TA01 | 3 Pin XLR female to 3 pin TQG female |
| TA02 | 4 Pin XLR female to 4 pin TQG female |
| TA04 | 3 Pin XLR male to 3 pin TQG female |
| TA05 | 4 Pin XLR male to 4 pin TQG female |

DIMENSIONS ARE FOR REFERENCE ONLY Inch (mm)

Switchcraft®
www.switchcraft.com
5555 North Elston Avenue / Chicago, IL 60630
Phone: 773-792-2700 / Fax: 773-792-2129

# AUDIO ADAPTERS



## 1/4" to 1/4", RCA; RCA to RCA; & Miscellaneous Adapter Series

### Ordering Information

| Part Number | Description |
|---|---|
| **1/4" to 1/4"** | |
| 361A | Mono female to female |
| 362A | Stereo female to female |
| 363 | Mono male to male |
| 340 | 2 Mono jacks parallel to mono plug |
| 352A | Stereo jack to mono plug |
| **1/4" to RCA** | |
| 330P | 2 RCA jacks to mono plug, 4" cable |
| 336A | Female 1/4" to male RCA |
| 345A | Female RCA to male 1/4" |
| **RCA to RCA** | |
| 330F1 | 2 Female RCA parallel to 1 male RCA |
| 330F2 | 1 Male and 1 female parallel to 1 male |
| 349A | Female to female |
| **Miscellaneous** | |
| 332A | Old MC1M type to 1/4" female |
| 365 | Tini-Jax (.141") to RCA male |
| 370A | Female RCA to Tini-Plug (.141") |
| 374 | 1/4" female to Tini-Plug (.141") |
| 376 | Tini-Jax (.141") to Micro-Plug (.097") |
| 377 | Micro-Jax (.097") to Tini-Plug (.141") |
| 44 | Female 2500 Series to 1/4" plug |

# Littel Phone, Hi-D, Right Angle PC Mount 1/4", 1/4" Extension Jack Series

Switchcraft offers an extensive variety of 1/4" commercial jacks. Littel phone jacks offer open frame designs, Hi-D jacks offer an enclosed, 94V-0 rated thermoplastic housing, our RA jacks are designed for right angle PC board layouts, and our Extension jacks allow the end user to extend cable lengths. All offer a wide range of options to fit a multitude of needs. For mating plugs, look to page 83 for all of the various options.

## Specifications

### Mechanical

Life: 10,000 insertion/withdrawal cycles, minimum

### Electrical

Contact Resistance: .030 ohms maximum (initial), .050 ohms maximum (after humidity, durability exposure) Per Mil-Std-202E
Insulation Resistance: 10,000 MW minimum (initial), 1,000 MW minimum (after humidity)
Dielectric Withstanding Voltage: 500V, 60 Hz (rms) AC
Contact Rating: 1A, 25 VDC

### Environmental

Thermal Range: -55˚C to +85˚C (non-operating); -20˚C to +65˚C (operating)
Thermal Shock: Per Mil-Std-202, method 107
Humidity: Per Mil-Std-202, method 106
Salt Spray: Per Mil-Std 202, method 101

### Materials

Mounting Bushing: Copper alloy, nickel-plated (RN & RA Series: Thermoplastic)
Insulation: Rigid plastic
Springs: Special copper alloy. Integral contacts are standard in the isolated switching circuits
Sleeve Terminal: Copper alloy
Hardware: Supplied with one Number P10001 copper alloy nickel-plated hex nut, and one Number S1022 steel nickel-plated washer

**See next page for ordering information**


5555 North Elston Avenue / Chicago, IL 60630
Phone: 773-792-2700 / Fax: 773-792-2129

# Jack Series

## Ordering Information

| Part No. | Conductors | Typical Description | Mating Plug | Notes |
|---|---|---|---|---|
| **Littel Phone Jacks** | | | | |
| 11 | 2 | single open | 280 | |
| 12A | 2 | single closed | 280 | |
| 12B | 3 | double open | 297 | |
| 14B | 3 | double closed | 297 | |
| **Hi-D Jacks** | | | | |
| 111 | 2 | single open | 280 | |
| 112B | 3 | double open | 297 | |
| 113BPC1M | 3 | tip closed, ring open (common to sleeve) | 297 or 482NC | PC terms, accepts Littel and Mil-type plugs |
| 114B | 3 | double closed | 297 | |
| 114BPC | 3 | double closed | 297 | PC terms |
| 114BPCS | 3 | double closed | 297 | Springlock PC terms |
| 114BPC1M | 3 | double closed | 297 or 482NC | PC terms, accepts Littel and Mil-type plugs, metric thread |
| Z15J | 2 | single open | 187B | 15A rated |
| **Right Angle PC Mount 1/4" Jacks** | | | | |
| RA49B11 | 2 | single open | 280 | |
| RN112APC | 2 | single closed | 280 | |
| RA49C14B | 3 | double closed | 297 | |
| **1/4" Extension Jacks** | | | | |
| 80 | 2 | single open | 280 | Screw terms, black handle |
| 88 | 2 | single open | 280 | Solder terms, black handle |
| 120 | 2 | single open | 280 | Screw terms, shielded handle |
| 121 | 2 | single open | 280 | Solder terms, shielded handle |
| 131 | 3 | double open | 297 | Solder terms, shielded handle |
| 133 | 3 | double open | 298 | Solder terms, shielded handle, locking |
| 830 | 3 | double open | 297 | Screw terms, black handle |
| 128 | 2 | single open | 280 | Solder terms, shielded handle |
| 1238 | 3 | double open | 297 | Solder terms, shielded handle |

**See Pages 72–74 for Mechanical Drawings**

# Thick Panel/Guitar, Locking 1/4", Tini, Tini-Extension, Micro, 3.5mm

The TP or Thick Panel jacks are typically used in applications such as loudspeaker enclosures and solid-body guitars. Only premium materials are used in the manufacture of these jacks. Locking 1/4" jacks allow the end user to lock the mating plug, providing positive detent to the connection. Also offered is a wide range of 1/8" jacks and true 3.5mm jacks.

## Specifications - Thick Panel Series & Locking Jacks

### Electrical

Insulation Resistance: 2 x 106 MW at 500 VDC per Mil-Std-202, method 302 (initial)
Dielectric Withstanding Voltage: 1,000 VAC (ms)
Life: 10,000 cycles minimum

### Environmental

Thermal Range: -55˚C to +85˚C (non operating); -20˚C to +65˚C (operating)
Thermal Shock: Per Mil-Std-202, method 107
Humidity: Per Mil-Std-202, method 106
Salt Spray: Per Mil-Std-202, method 101

### Materials

Shell - Locking Jacks: Die-cast zinc, with satin nickel-plating; Black chrome over nickel-plating on special order
Insert and Latch: Thermoplastic, UL94V-0
Latch Release: Nickel-plated die-cast zinc
Contact Springs: Tin-plated copper alloy
Mounting Bushing - Thick Panel Jacks: Nickel-plated copper alloy with knurled flange
Insulating Spacer: Rigid plastic

(continued on next page)


5555 North Elston Avenue / Chicago, IL 60630
Phone: 773-792-2700 / Fax: 773-792-2129

# Jack Series

(continued from previous page)

Insulator/Spring Mount: Thermo-plastic
Springs: Copper alloy
Terminals: Tip: Copper alloy; Ring: (Number 152B only) Copper alloy; Sleeve: Steel, tin-plated
Hardware - Thick Panel Jacks: Supplied with one, Number P10531 nickel-plated copper alloy hex nut; and one, Number P1476 nickel-plated copper alloy flat washer

## Specifications - 35RAPC Series

### Electrical

Contact Resistance: 20 milliohms maximum
Insulation Resistance: 100 milliohms minimum at 250 VDC
Dielectric Withstanding Voltage: 250 VAC
Life: 5,000 cycles, minimum
Insertion Force: 0.88 pounds - 3.5 pounds
Withdrawal Force: 0.88 pounds - 2.64 pounds

### Materials

Coil Spring: Steel Wire
Bushing: Nickel-plated copper alloy
Terminal: Silver-plated copper alloy
Tip Spring: Silver-plated copper alloy
Shunt Terminal: Plated copper alloy
Cover: Thermoplastic, transparent UL 94V-2
Body: Thermoplastic, UL 94V-1 black color

## Specifications - 35PM Series & Tini Jack Series

### Electrical

Contact Resistance: .075 ohms maximum
Insulation Resistance: 5,000 MW minimum
Dielectric Withstanding Voltage: 250 VAC maximum
Life: 5,000 insertion/withdrawal cycles, minimum
Contact Rating: .25A, 48 VDC

### Materials

Mounting Bushing: Nickel-plated copper alloy
Insulating Spacers: Rigid plastic
Springs: Copper alloy
Sleeve Terminal: Tin-plated copper alloy
Hardware: Supplied with one, Number P11501 nickel-plated brass locknut; and one, Number S17901 nickel-plated steel flat washer

## Ordering Information

| Part No. | Conductors | Description | Typical Mating Plug | Notes |
|---|---|---|---|---|
| **Thick Panel/Guitar Jacks (1/4")** | | | | |
| 151 | 2 | single open | 280 | Nickel finish |
| 152 | 3 | double open | 297 | Brass finish |
| 152B | 3 | double open | 297 | Nickel finish |
| 153 | 2 | single open | 280 | Gold-plated springs, electro-polish brass finish, 9/16-12 UNC wood thread |
| 154 | 3 | double open | 297 | Gold-plated, no cable clamp |
| 155 | 3 | double open | 297 | Black satin chrome finish, no cable clamp |
| **Locking 1/4" Jacks** | | | | |
| E111L | 2 | single open | 280 | |
| E112BL | 3 | double open | 297 | |
| **Tini-Jacks (.141")** | | | | |
| 41 | 2 | single open | 750 | |
| 42A | 2 | single closed | 750 | |
| 142A | 2 | single closed | 750 | |
| PC142A | 2 | single closed | 750 | PC terms |
| **Tini-Extension Jacks (.141")** | | | | |
| 125 | 2 | single open | 750 | |
| **3.5mm Jacks** | | | | |
| 35RAPC2AV | 2 | single closed | | Threaded bushing, PC terms |
| 35RAPC2BH3 | 3 | double open | 35HDNN | Threaded bushing, PC terms |
| 35RAPC3BH3 | 3 | tip closed, ring open | 35HDNN | Threaded bushing, PC terms |
| 35RAPC4BH3 | 3 | double closed | 35HDNN | Threaded bushing, PC terms |
| 35RAPC7J | 3 | top jack dual open | 35HDNN | Dual vertical jack bottom jack dual closed |
| 35RAPC7JS | 3 | top jack dual open | 35HDNN | Dual vertical jack, shielded bottom jack dual closed |
| 35PM1 | 2 | single open | 750 | |
| 35PM2A | 2 | single closed | 750 | |

**See Pages 75-79 for Mechanical Drawings**

# Jack Series

## Phono, Phono Extension, TT or Bantam, MT 1/4" Jack Series

Phono jacks, more commonly called RCA jacks offer low cost, two conductor connections. TT or bantam jacks are the same type used in our audio patchbays. Typically used in high end studio applications. MT or 1/4" jacks are just a bigger version of the TT jacks. Same high quality, just in a larger package.

### Specifications - Phono Jacks

**Materials**

Frame and Shell: Steel, plated
Center Terminal: Plated copper alloy (3517PC); Plated copper alloy (3514PC)
Insulator: Thermoplastic (3514PC) Ceramic and glass filled thermoplastic (3517PC)

**For 3515PC Only:**

Contact and Saddle: Spring type copper alloy, copper alloy pre-tinned
Shell: Steel or copper alloy, plated
Insulator Bushing: Ceramic
Insulator Spacer: Glass-filled thermoplastic

### Specifications - TT and MT Jacks

**Mechanical**

Life: Commercial – 30,000 insertion/withdrawal cycles, minimum; Military – 30,000 insertion/withdrawal cycles, minimum
Mechanical Shock: Military – Per Mil-Std-202, method 213, Test Condition H (75g)
Vibration: Military – Per Mil-Std-202, method 213, (10-55 Hz)

**Electrical**

Contact Resistance: Commercial – .030 ohms maximum (initial), .050 ohms maximum (after humidity, durability, exposure); Military – .010 ohms maximum (initial), .020 ohms maximum (after life), .10 ohms maximum (after salt spray)
Insulation Resistance: Commercial – 10,000 MΩ minimum (initial), 1,000 MΩ minimum (after humidity); Military – 10,000 MΩ minimum (initial), 1,000 MΩ minimum (after humidity, durability exposure)
Dielectric Withstanding Voltage: 500V, 60 Hz (rms) AC

(continued on next page)

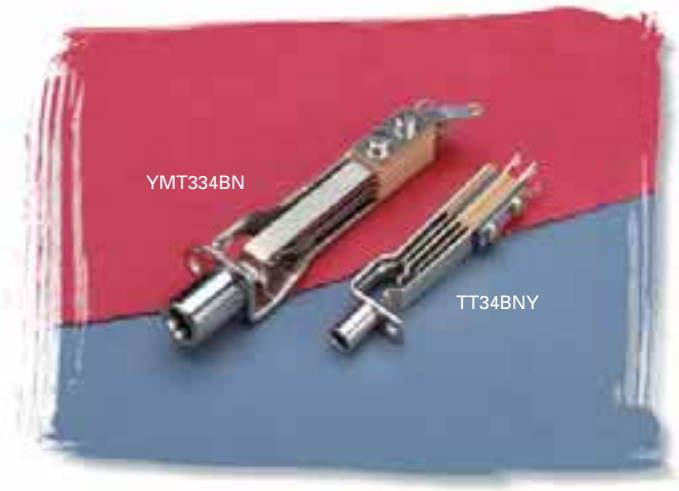




5555 North Elston Avenue / Chicago, IL 60630
Phone: 773-792-2700 / Fax: 773-792-2129

# Jack Series

(continued from previous page)

**Environmental**

Thermal Range: Commercial — 55˚C to +85˚C (non-operating), -20˚C to +65˚C (operating); Military – -55˚C to +85˚C (non operating), -40˚C to +65˚C (operating)

Thermal Shocks: Commercial – Per Mil-Std-202, method 107; Military – Per Mil-Std-202, method 107

Humidity: Commercial – Per Mil-Std-202, method 106; Military — 0% to 95% operating and non-operating

Salt Spray: Commercial – Per Mil-Std-202, method 101; Military – Per Mil-Std-202, method 101 (48 hours)

Moisture Resistance: Military – Per Mil-Std-202, method 106 (240 hours)

**Materials**

Frame: Steel, nickel plated

Springs: Copper alloy

Contacts: Welded, crossbar, gold plated

## Ordering Information

| Part No. | Conductors | Typical Description | Mating Plug | Notes |
|---|---|---|---|---|
| **Phono Jacks** | | | | |
| 3501FP | 2 | single open | 3502A | Front mounting |
| 3501FR | 2 | single open | 3502A | Rear mounting |
| 3514PC | 2 | single open | 3502A | Right angle, PC mount |
| 3517PC | 2 | single open | 3502A | Right angle, PC mount |
| BPJR** | 2 | single open | 3502A | Rear mounting, colored insulators |
| BPJR**AU | 2 | single open | 3502A | Same as above, with gold-plating |
| BPJF** | 2 | single open | 3502A | Front mounting, colored insulators |
| BPJF**AU | 2 | single open | 3502A | Same as above, with gold-plating |
| BPJJ** | 2 | single open | 3502A | Feed through mount |
| BPJJ**AU | 2 | single open | 3502A | Same as above, with gold-plating |
| **Phone Extension Jacks** | | | | |
| 3503 | 2 | single open | 3502A | |
| **TT or Bantam Jacks** | | | | |
| TT34B | 3 | double closed | TT253NC | |
| TT34BNY | 3 | double closed | TT253NC | Nickel-plated frame, fanned terminals |
| WTT34B | 3 | double closed | TT253NC | Wire-wrap terminals |
| **MT 1/4" Jacks** | | | | |
| MT334B | 3 | double closed | 482NC | |
| WMT334B | 3 | double closed | 482NC | Wire-wrap terminals |
| YMT334BN | 3 | double closed | 482NC | Nickel-plated frame, fanned terminals |

** To designate color of insulator, use: 01– Black, 02 – Red, 03 – White, 04 – Yellow, 05 - Blue, 06 - Green

**See Pages 80-82 for Mechanical Drawings**

# Power/Jacks Plugs Series
## 700, S700, 800 Cord & Panel Style Series

Low power AC to DC power jacks and plugs are used throughout the audio industry, to power a wide variety of products. Switchcraft offers both cord plug and panel mount versions, including locking and non-locking versions.

### Specifications - Plugs

**Electrical:**

Current (Carry): 5 amps

**Materials**

Plug Sleeve and Pin: Nickel-plated copper alloy
Lock Ring: Nickel-plated copper alloy
Lock Ring Thread Size: 5/16" - 32 UNEF 2B
Finger Insulator: Molded plastic
Insulating Washers: Rigid plastic
Sleeve Terminal: Copper alloy, electro-tinned
Handle: Molded plastic
Handle Thread Size: 5/16" - 24 UNF 2B

### Specifications - Jacks

**Mechanical**

Life: 10,000 insertion/withdrawal cycles minimum
Insertion/Withdrawal Forces: 3 pound insertion (maximum), 4 ounce minimum withdrawal

**Electrical**

Contact Resistance: .01 ohms maximum (initial), .02 ohms maximum (after humidity, durability exposure), .1 ohms maximum (after salt spray)
Insulation Resistance: 10,000 MW minimum (initial), 1,000 MW minimum (after humidity, durability exposure)
Dielectric Withstanding Voltage: 500 VAC maximum
Contact Rating: 5A, 12 VDC resistive

**Materials**

Housing: Molded plastic
Mounting Bushing and Hex Nut: Plated copper alloy
Pin, Spring and Terminals: Plated copper alloy
Insulators: Rigid plastic
Hardware: Supplied with one Number P2439 nickel-plated brass hex nut, and one Number P2441 nickel-plated steel flat washer

### Ordering Information

| Part Number | Style | Notes |
|---|---|---|
| 712A | Panel | 0.100" center pin |
| 722A | Panel | 0.080" center pin |
| 732A | Panel | 0.050" center pin |
| 760 | Cord | 0.100" center hole, black handle |
| 765 | Cord | 0.100“ center hole, red handle |
| S760 | Cord | 0.080" center hole, black handle |
| S765 | Cord | 0.080" center hole, red handle |
| 860 | Cord | 0.050" center hole, black handle |
| 865 | Cord | 0.050" center hole, red handle |
| 760K | Cord | 0.100" center hole, black handle, locking |
| S760K | Cord | 0.080" center hole, black handle, locking |

**See Next Page for Mechanical Drawings**


5555 North Elston Avenue / Chicago, IL 60630
Phone: 773-792-2700 / Fax: 773-792-2129

# Jack Series Dimension Drawings

## Littel Phone, Hi-D, 1/4" Extension, 700 Panel Jack Series

### 11, 12A, 12B, 14B

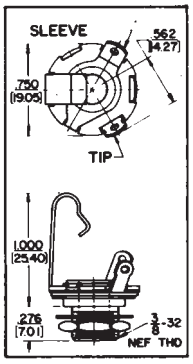


11 Series

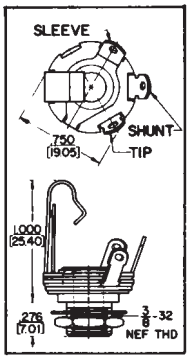


12A Series

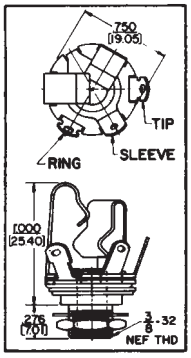


12B Series

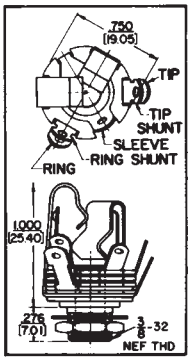


14B Series

### 712A

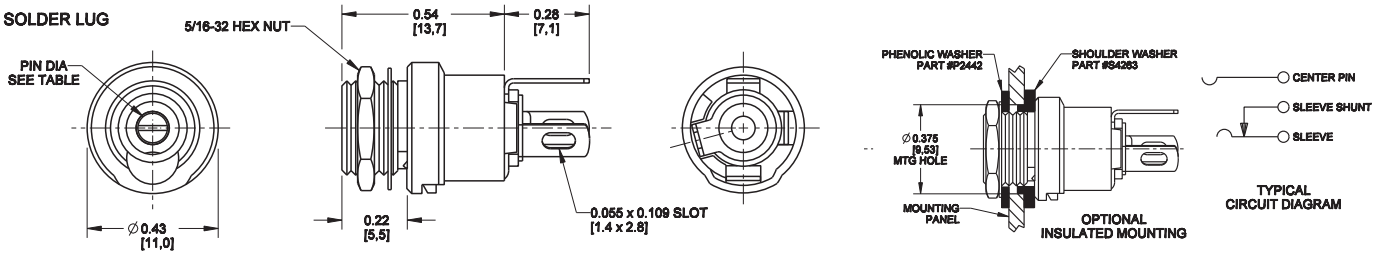


### Z15J

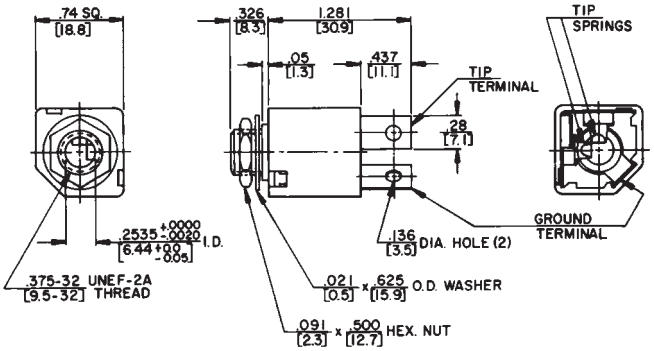


### 80

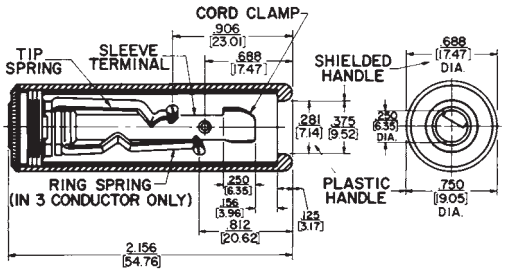


Switcl

# Jack Series Dimension Drawings

## Littel Phone, Hi-D, 1/4" Extension Jack Series

### Solder Lug Terminals for Hi-D Jax - 111, 112B, 114B

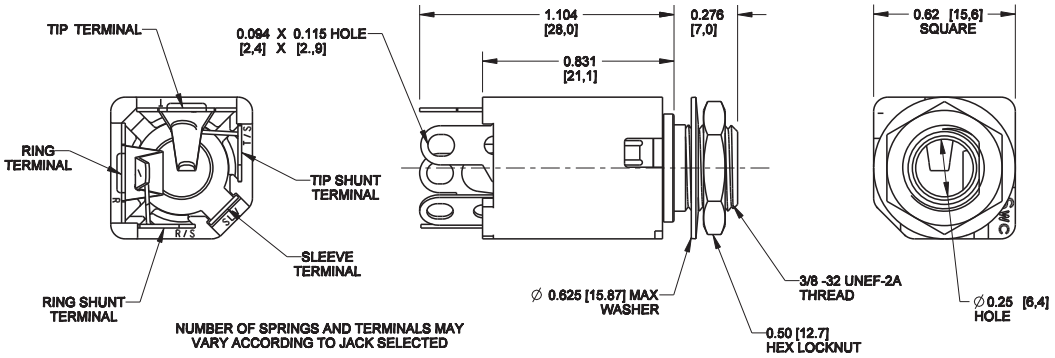


### Spring Lock PC Terminals for Hi-D Jax - 114BPCS

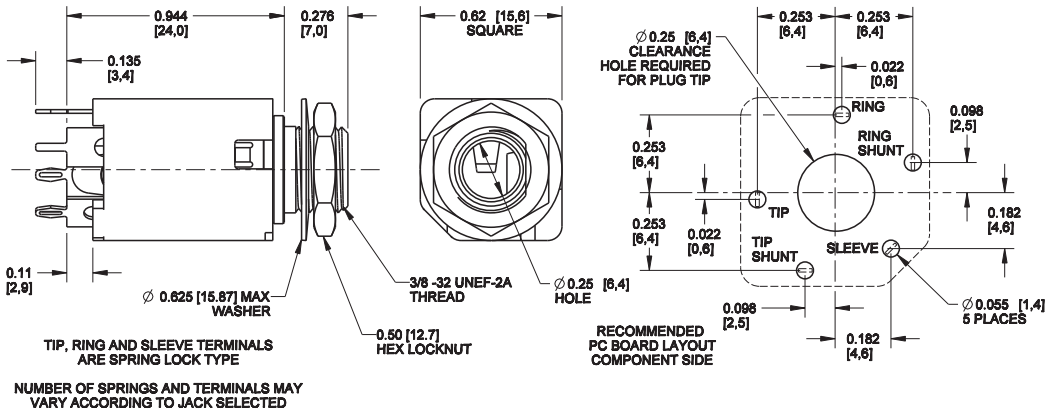


### PC Terminals for Hi-D Jax - 113BPC1M, 114BPC1M

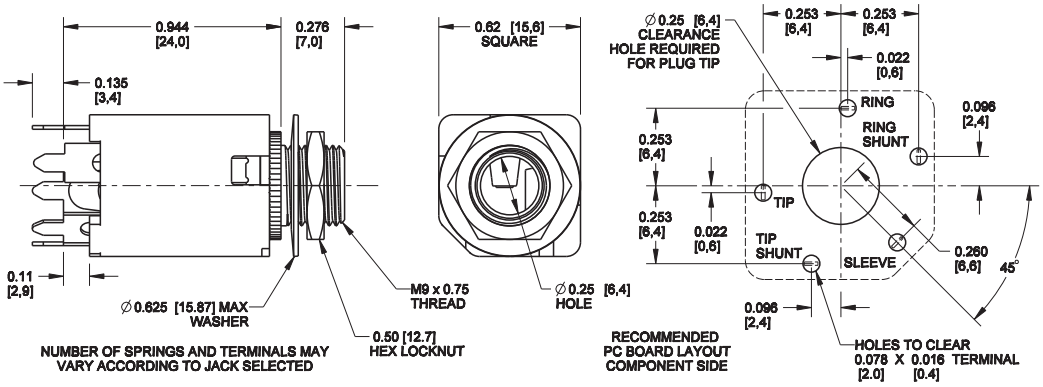


DIMENSIONS ARE FOR REFERENCE ONLY Inch / (mm)

Switchcraft®
www.switchcraft.com
5555 North Elston Avenue / Chicago, IL 60630
Phone: 773-792-2700 / Fax: 773-792-2129

# Jack Series Dimension Drawings

## Right Angle PC Mount 1/4" Jack Series

### RA49B11

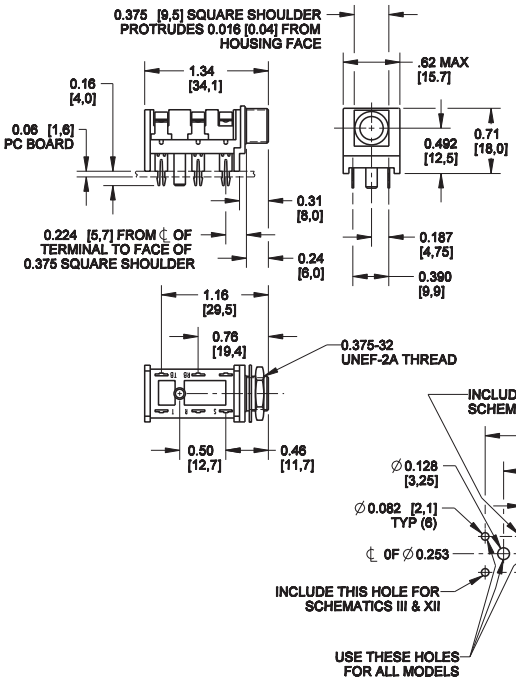


### RA49C14B

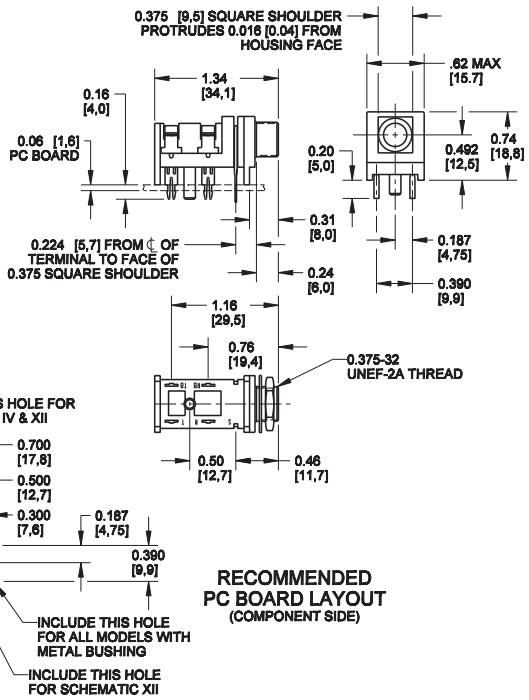


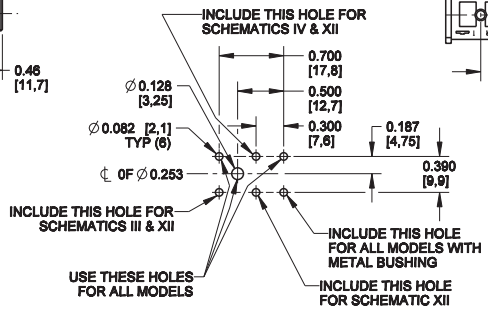


RECOMMENDED PC BOARD LAYOUT (COMPONENT SIDE)

### RN112APC

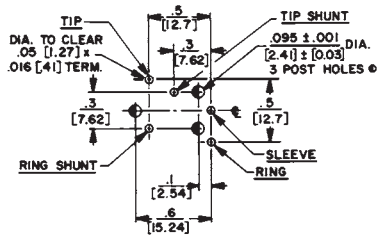


RECOMMENDED PC BOARD LAYOUT (Component Side)

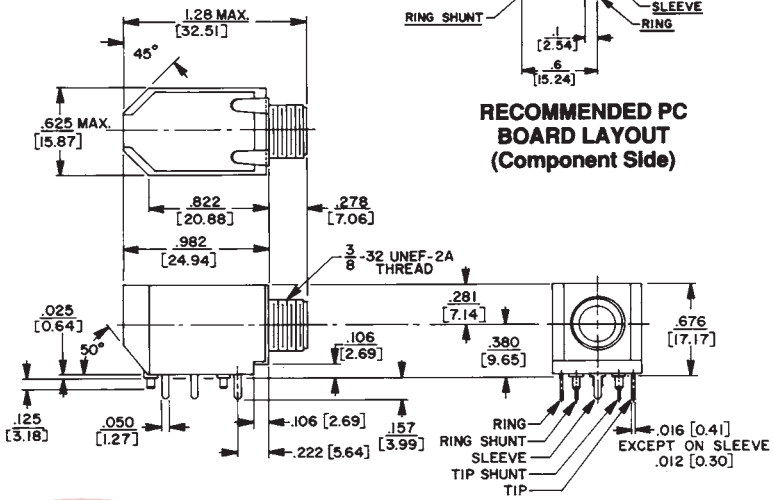


Switc

# Jack Series Dimension Drawings

## Thick Panel/Guitar, Locking 1/4", Tini, Tini Extension Jack Series

### 151, 153

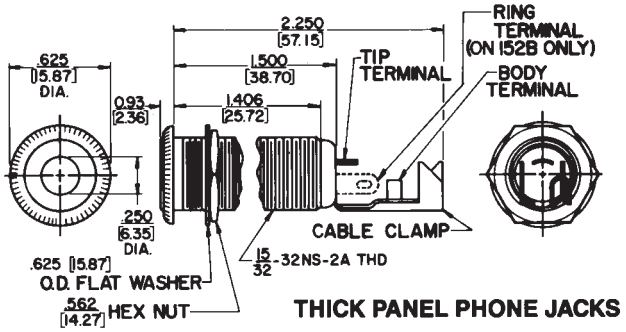


THICK PANEL PHONE JACKS

### E111L, E112BL

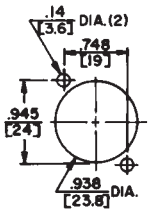


RECOMMENDED PANEL CUTOUT

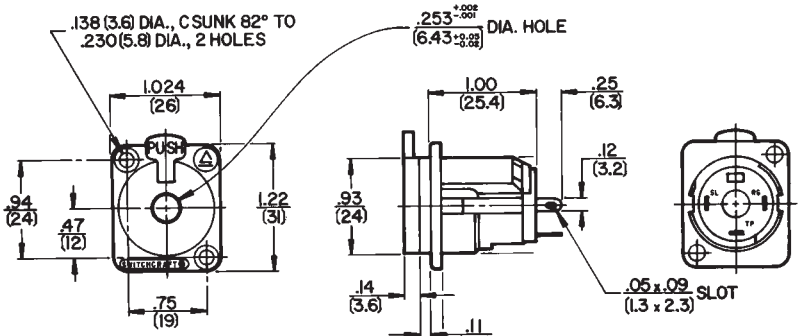


LOCKING PHONE JACKS, SERIES E

### 41, 42A

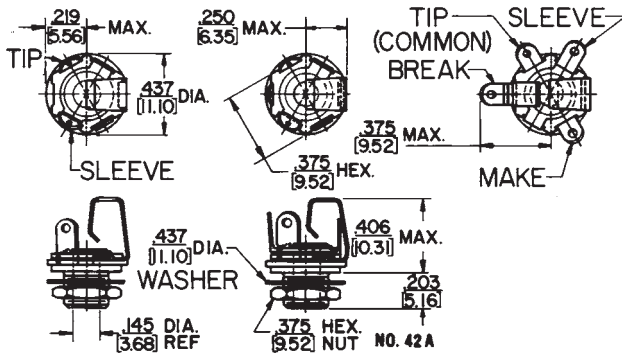


### 125

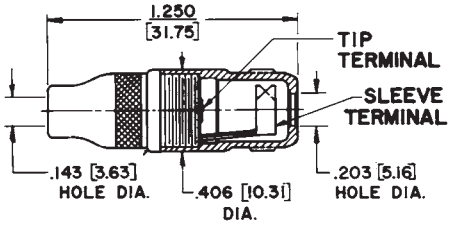


TINI-EXTENSION JAX JACK

DIMENSIONS ARE FOR REFERENCE ONLY Inch (mm)

Switchcraft®
www.switchcraft.com
5555 North Elston Avenue / Chicago, IL 60630
Phone: 773-792-2700 / Fax: 773-792-2129

# Jack Series Dimension Drawings

## Micro, 3.5mm Jack Series

### 142, PC142A

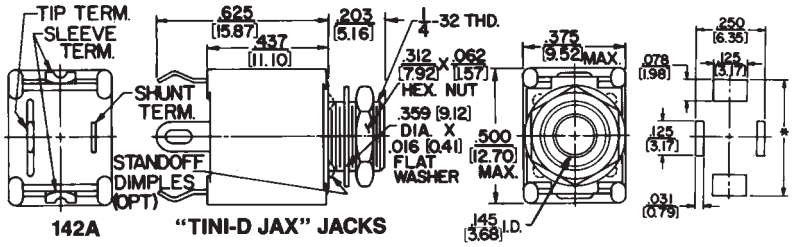


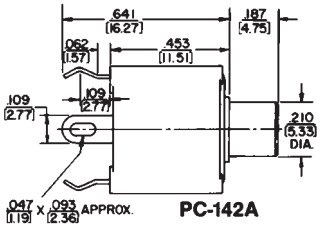


*.406 [10.31] FOR .062 [1.57] THK. BOARD
*.422 [10.72] FOR .078 [1.98] THK. BOARD
*.437 [11.10] FOR .093 [2.36] THK. BOARD

**RECOMMENDED PC BOARD LAYOUTS**

### 35RAPC2AV

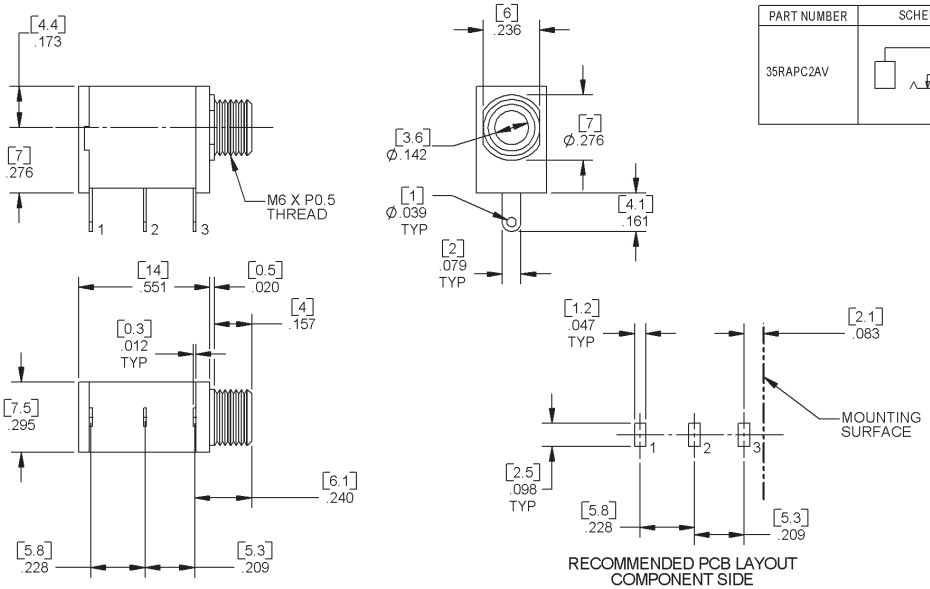


| PART NUMBER | SCHEMATIC |
|---|---|
| 35RAPC2AV | 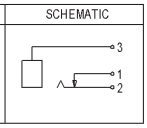 |



Switc

* Please visit the product pages on our website for the most up-to-date product information



## 35RAPC2BH3, 35RAPC3BH3, 35RAPC4BH3

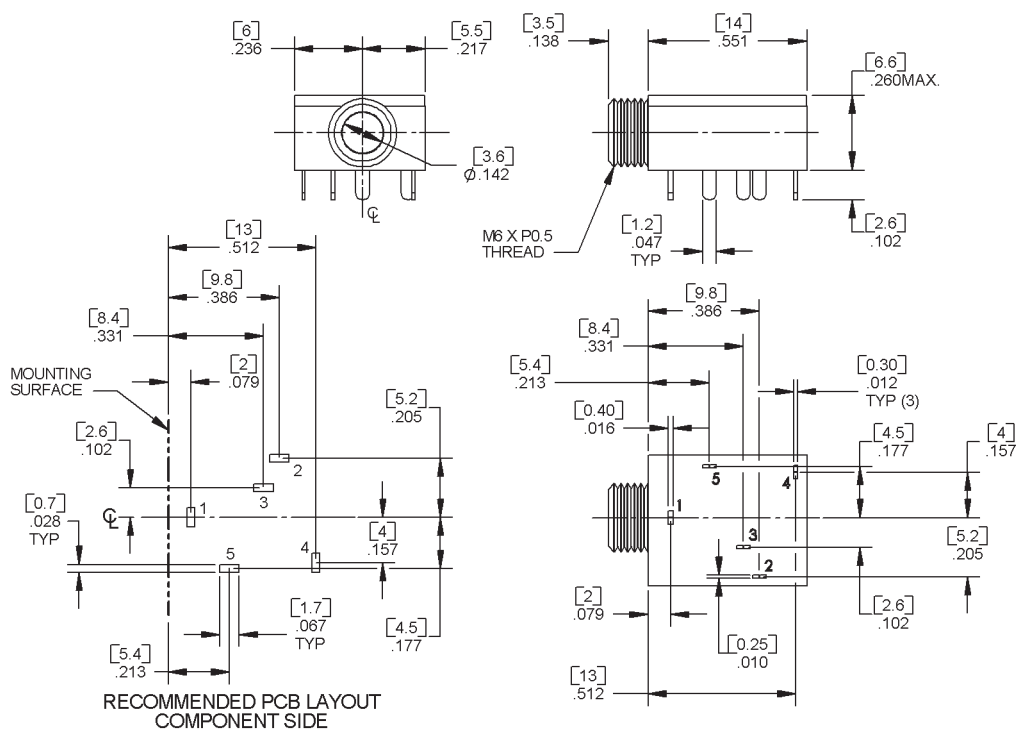


| PART NUMBER | SCHEMATIC |
|---|---|
| 35RAPC3BH3 | 1 2 4 5 |
| 35RAPC4BH3 | 1 2 3 4 5 |
| 35RAPC2BH3 | 1 2 5 |
| 35RAPC2AH3 | 1 4 5 |

DIMENSIONS ARE FOR REFERENCE ONLY Inch (mm)

Switchcraft®
www.switchcraft.com
5555 North Elston Avenue / Chicago, IL 60630
Phone: 773-792-2700 / Fax: 773-792-2129

# Jack Series Dimension Drawings

## 3.5mm Jack Series

### 35RAPC7J, 35RAPC7JS

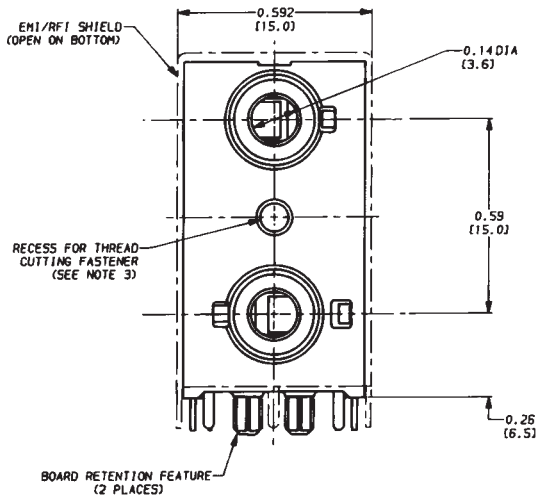


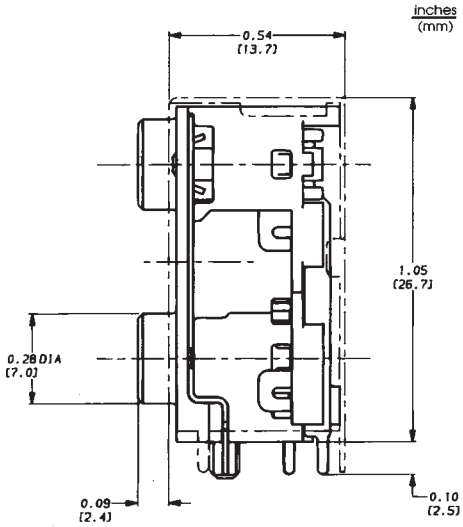


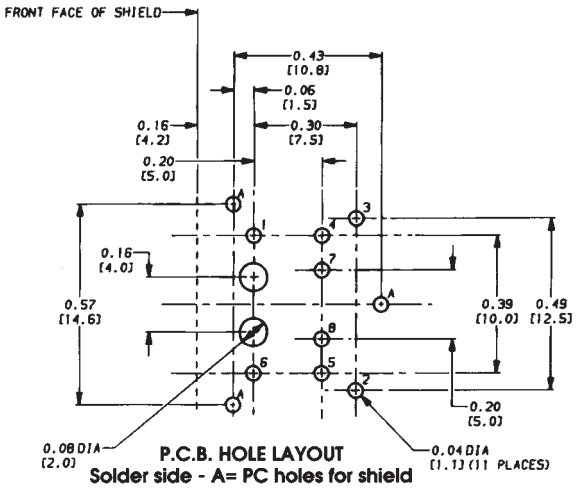


P.C.B. HOLE LAYOUT
Solder side - A= PC holes for shield

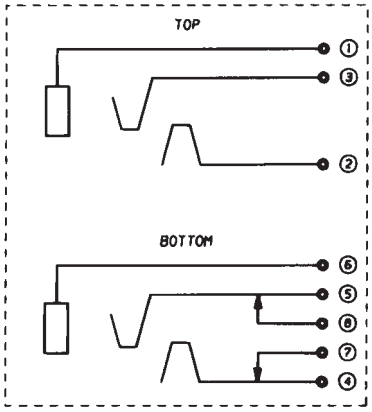


SCHEMATIC

Switc

# Jack Series Dimension Drawings



## 3.5mm Jack Series

### 35PM1

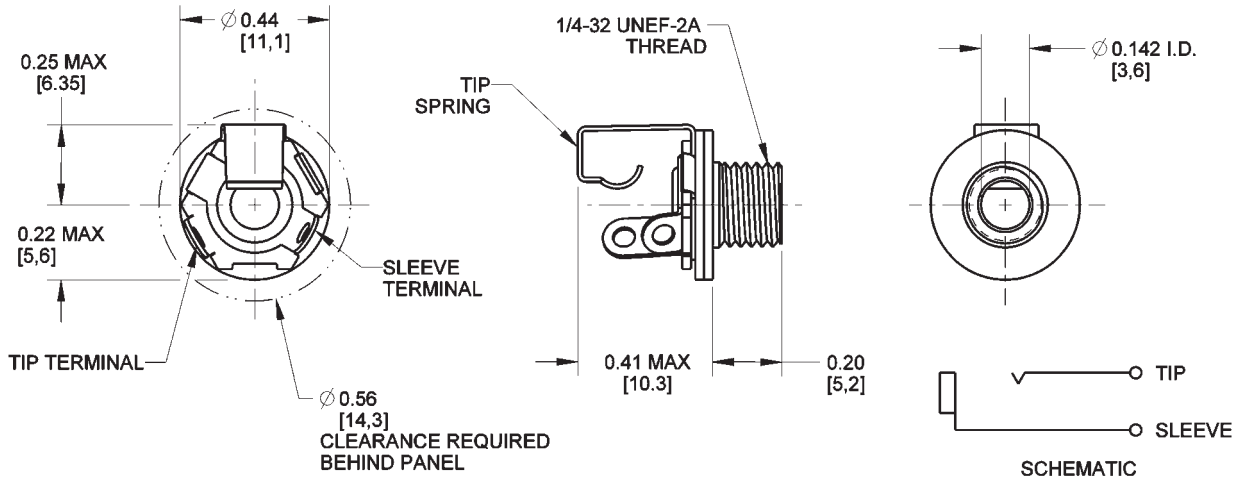


### 35PM2A

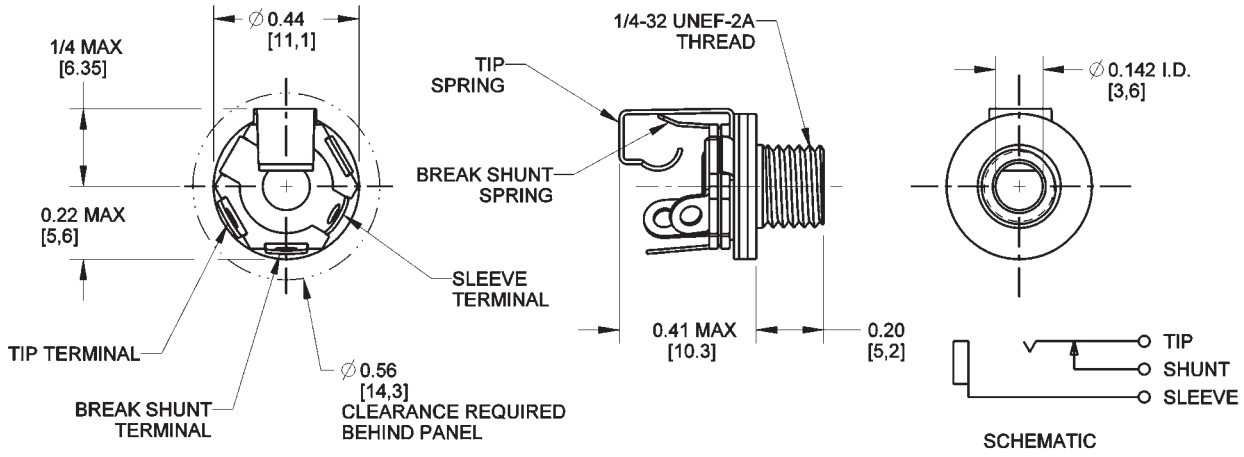


DIMENSIONS ARE FOR REFERENCE ONLY Inch (mm)

Switchcraft®
www.switchcraft.com
5555 North Elston Avenue / Chicago, IL 60630
Phone: 773-792-2700 / Fax: 773-792-2129

# Jack Series Dimension Drawings

## Phono and Phono Extension Jack Series

### 3501FP

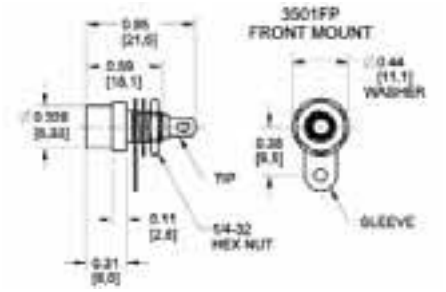


### BPJJ Series

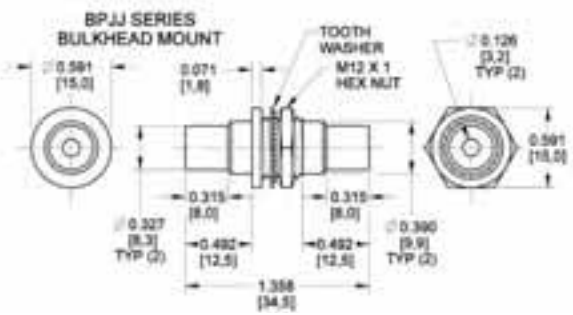


### 3501FR

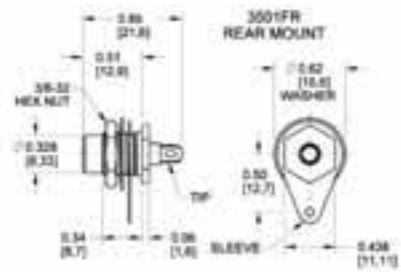


### BPJF Series

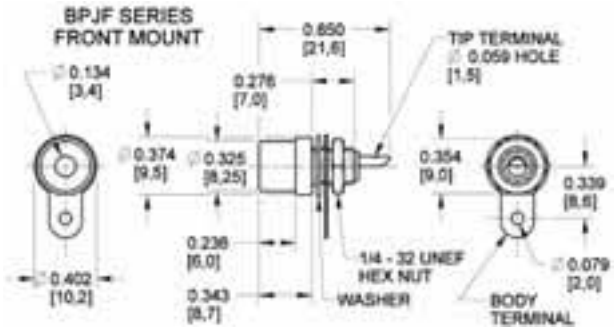


### 3503 Extension

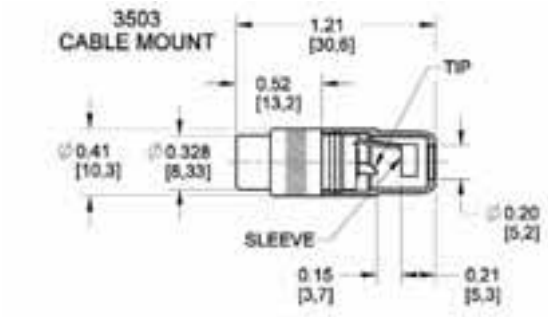


### BPJR Series

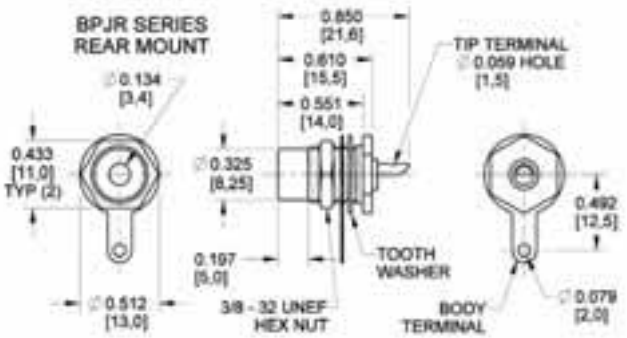


### 3514PC, 3517PC

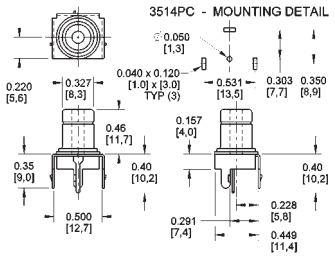


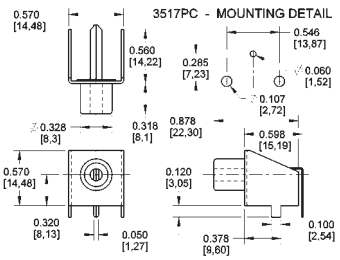


Switc

# Jack Series Dimension Drawings



## TT or Bantam Jack Series

### TT34B, TT34BN, WTT34B

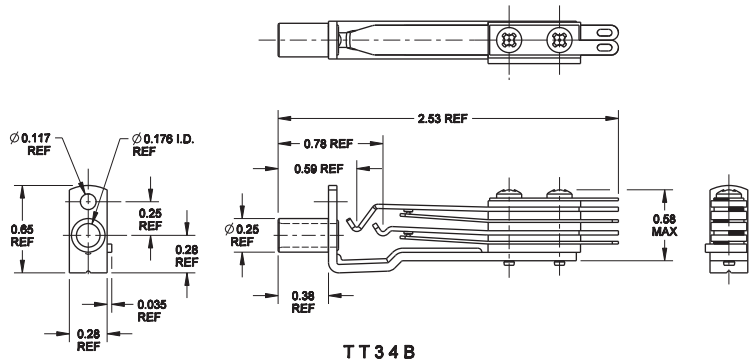


TT34B

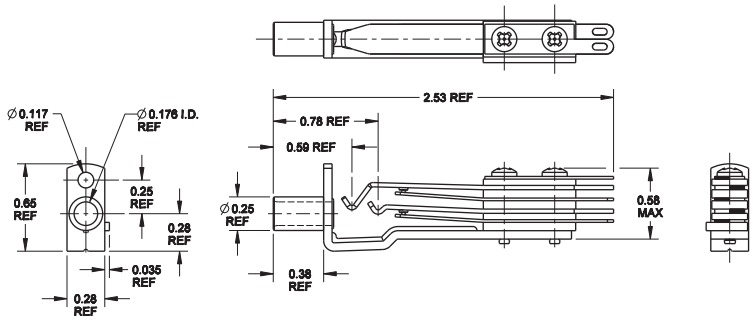


TT34BN

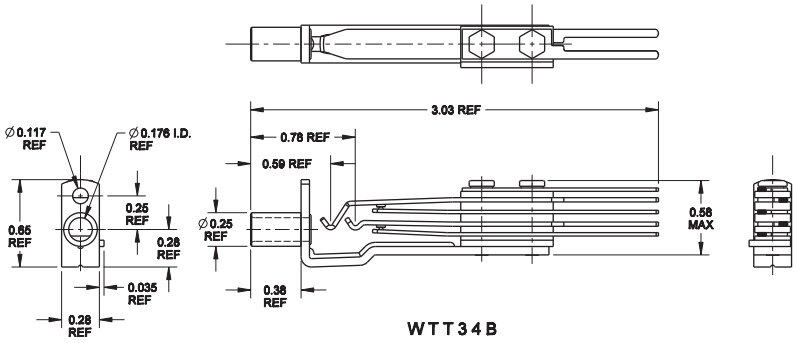


WTT34B

DIMENSIONS ARE FOR REFERENCE ONLY Inch (mm)

Switchcraft®
www.switchcraft.com
5555 North Elston Avenue / Chicago, IL 60630
Phone: 773-792-2700 / Fax: 773-792-2129

# Jack Series Dimension Drawings

## MT 1/4" Jack Series

### MT334B, WMT334B, YMT334BN

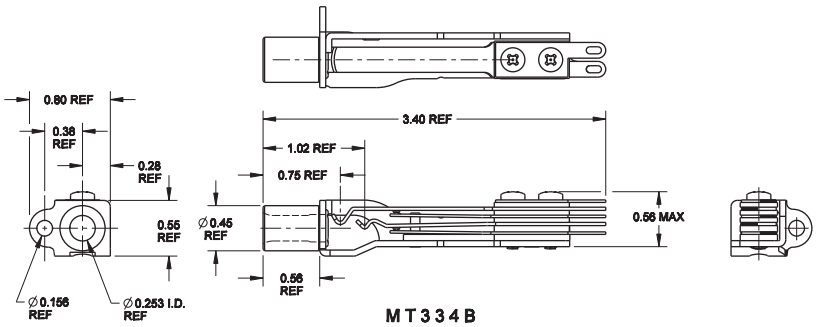


MT334B

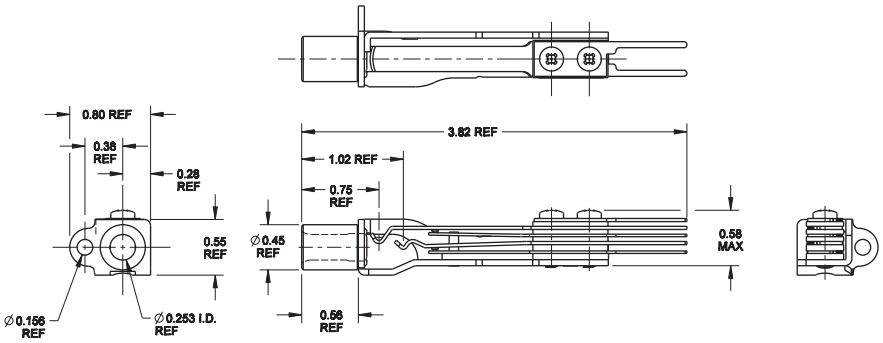


WMT334BN

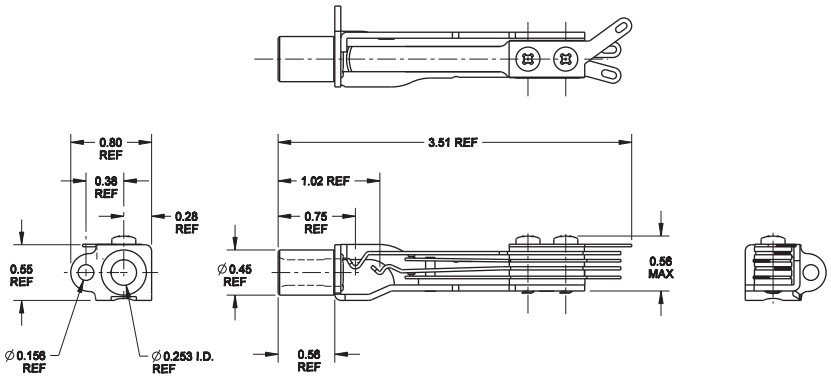


YMT334BN

Switc

# Littel 1/4", Right Angle 1/4", Silent, Super Heavy Duty Plug Series

Switchcraft Littel Plugs all feature one-piece tip rods for added strength and durability. All are offered in a wide variety of configurations, including straight, right angle, shielded, screw or solder terminals. The Heavy Duty Speaker plugs have larger cable clamps and are rated at 15A. The Silent plugs have a unique circuit-closing device which stops hums, pops, and squeals when the plug is removed or inserted from the jack. Miti plugs feature heavy duty brass construction, rugged cable clamps, and spring flex reliefs. All plugs meet EIA standards for tip configuration, which ensures you they mate properly with the jack.

## Specifications

### Electrical

- Contact Resistance (typical Depends on Mating Jack): < 0.020 ohms
- Dielectric Withstand Voltage: 500 VAC (minimum)
- Insulation Resistance @ 500 VDC: 2,000 megohms (minimum)
- Insulation Resistance (after Mil-Std-202 Salt Spray): 1,000 megohms (minimum)
- Working Voltage: 250 VAC, 140 VDC
- Insert/Withdrawal Force: Depends on Mating Jack
- Soldering Requirement: ANSI/J-Std-001
- Temperature Range: -40˚C to +85˚C
- U.L. Component Recognition File No: E118169
- Life: Depends on Mating Jack

### Materials

- Tip: Nickel-plated copper alloy
- Sleeve: Nickel-plated copper alloy
- Handle: Nickel-plated copper alloy
- Tip Terminal: Copper alloy, electrotin-plated
- Cable Clamp: Copper alloy, electro-tinplated

**See Next Page for Ordering Information**

DIMENSIONS ARE FOR REFERENCE ONLY Inch (mm)



5555 North Elston Avenue / Chicago, IL 60630
Phone: 773-792-2700 / Fax: 773-792-2129

# Plug Series

## Ordering Information

| Part No. | Typical Conductors | Terminals | Mating Jack | Handle | Notes |
|---|---|---|---|---|---|
| **1/4"" Littel Plug Series** | | | | | |
| 240 | 2 | Screw | 11 | Black | |
| 245 | 2 | Screw | 11 | Red | |
| 250 | 2 | Solder | 11 | Black | |
| 260 | 2 | Screw | 11 | Black | |
| 270 | 2 | Screw | 11 | Black | |
| 280 | 2 | Solder | 11 | Shielded | |
| 281 | 2 | Solder | 11 | Shielded | Unassembled |
| 580 | 2 | Solder | 11 | Shielded | Diecast handle |
| 285 | 2 | Solder | 11 | Shielded | Unassembled |
| 285L | 2 | Solder | 11 | Shielded | Larger cable clamp |
| 267 | 3 | Solder | 12B | Black | |
| 290 | 3 | Screw | 12B | Shielded | |
| 297 | 3 | Solder | 12B | Shielded | |
| 299 | 3 | Solder | 12B | Shielded | Diecast handle |
| **Heavy Duty Speaker Plugs** | | | | | |
| 184 | 2 | Solder | 11 or Z15J | Shielded | Accepts Cable OD up to .375" |
| 188 | 2 | Solder | 11 or Z15J | Shielded | Accepts Cable OD up to .450" |
| 187 | 2 | Solder | 11 or Z15J | Shielded | Accepts Cable OD up to .330" |
| 187B | 2 | Solder | 11 or Z15J | Shielded | Black Handle, accepts Cable OD up to .330" |
| **Right Angle 1/4" Plugs** | | | | | |
| 226 | 2 | Solder | 11 | Shielded | |
| 228 | 2 | Solder | 11 | Shielded | Flat handle |
| 236 | 3 | Solder | 12B | Shielded | |
| 238 | 3 | Solder | 12B | | Flat handle |
| **Silent Plug** | | | | | |
| 172 | 2 | Screw | 11 | Shielded | |
| 181 | 2 | Solder | 11 | Shielded | |
| **Miti Plugs** | | | | | |
| 174S | 2 | Solder | 11 or Z15J | Shielded | Brass finish, spring flex relief |

**See Pages 88-89 for Mechanical Drawings**

# Tini, Micro, 3.5mm Stereo, Right Angle 3.5mm Stereo, Phono, Right Angle Phono Plugs Series

Switchcraft offers a wide variety of Tini, Micro, 3.5mm, and RCA or Phono plugs. Tini plugs are 2 conductor plugs with plug finger diameters of .141" or 3.57mm. Micro plugs are 2 conductor plugs with plug finger diameters of .097" or 2.47mm. Our 35HD Series are true 3.5mm plugs, available in both straight and right angle versions; and available only in 3 conductor. The RCA or Phono plugs come with either hollow pins or solid pins. The 3502 offers hollow pins and standard size handle, the 3502L offers the same pin, but with a larger handle, accommodating cables up to .290". The 3502A and 3502RA Series offer solid pins and the larger cable clamps and handles. The 3558 Series offers a low cost alternative, with hollow pins and plastic handles.

## Specifications

### Mechanical

Life rating: 5,000 insertion/withdrawals
Insertion/Withdrawal Force: 1 lb (depending on mating jack)

### Electrical

Insulation Resistance: > 100 megohms
Dielectric Withstanding Voltage: 250 VAC

### Environmental

Thermal Range: -55˚C to +85˚C (non operating); -20˚C to 65˚C (operating)
Thermal Shock: Mil-Std 202, method 107
Humidity: Mil-Std 202, method 106
Salt Spray: Mil-Std 202, method 101

(continued on next page)

5555 North Elston Avenue / Chicago, IL 60630
Phone: 773-792-2700 / Fax: 773-792-2129

# Plug Series

### Materials

Tip, Rod and Body (also integral coupling collar on lock micro-plug): Nickel-plated copper alloy
Insulation: Molded thermoplastic
Sleeve Termination and Cable Clamp: Tinned copper alloy
Handle: Nickel-plated copper alloy, or anodized aluminum, or thermoplastic. See factory for details.

## Ordering Information

| Part No. | Conductors | Terminals | Typical Mating Jack | Handle | Notes |
|---|---|---|---|---|---|
| **Tini-Plug (.141")** | | | | | |
| 740 | 2 | Screw | 41 | Black | |
| 750 | 2 | Solder | 41 | Black | |
| 755 | 2 | Solder | 41 | Red | |
| 780 | 2 | Solder | 41 | Shielded | |
| **Micro-Plugs (.097")** | | | | | |
| 850 | 2 | Solder | TR2A | Black | |
| 855 | 2 | Solder | TR2A | Red | |
| 851 | 2 | Solder | TR2A | Black | Locking version |
| 880 | 2 | Solder | TR2A | Shielded | |
| 881 | 2 | Solder | TR2A | Shielded | Locking version |
| **3.5mm Stereo Plugs** | | | | | |
| 35HDNN | 3 | Solder | | Shielded | |
| 35HDBAU | 3 | Solder | | Black Shielded | Gold-plated finger |
| 35HDNAU | 3 | Solder | | Shielded | Gold-plated finger |
| **3.5mm Right Angle Stereo Plugs** | | | | | |
| 35HDRANN | 3 | Solder | | Shielded | |
| 35HDRABAU | 3 | Solder | | Black Shielded | Gold-plated finger |
| 35HDRAAU | 3 | Solder | | Shielded | Gold-plated finger |
| **Phono Plugs** | | | | | |
| 3502 | 2 | Solder | 3501FP | Shielded | Hollow Pin |
| 3502A | 2 | Solder | 3501FP | Shielded | Large cable clamp, solid pin |
| 3502AAU | 2 | Solder | 3501FP | Shielded | Gold-plated finger |
| 3502ABAU | 2 | Solder | 3501FP | Black shielded | Gold-plated finger |
| 3502L | 2 | Solder | 3501FP | Shielded | Hollow pin, large cable clamp |
| 35581 | 2 | Solder | 3501FP | Red | Plastic handle |
| 35582 | 3 | Solder | 3501FP | Black | Plastic handle |
| 35585 | 3 | Solder | 3501FP | White | Plastic handle |
| **Right Angle Phono Plugs** | | | | | |
| 3502RA | 2 | Solder | 3501FP | Shielded | |
| 3502RABAU | 2 | Solder | 3501FP | Black Shielded | Gold-plated finger |
| 3502RAAU | 2 | Solder | 3501FP | Shielded | Gold-plated finger |

**See Pages 90-92 for Mechanical Drawings**

# TT or Bantam, Mil-Style 1/4" Plugs Series

Switchcraft leads the industry when developing innovative TT and MT Style plugs. Our "N" version plugs offer nickel-plated plug fingers to reduce tarnishing and corrosion. Our "NC" version plugs not only offer nickel-plated plug fingers, but also large, easy to use solder cups and terminals, plus easy to use cable clamps that really secure your cable to the plugs.

## Specifications

### Materials

Tip Rod, Body and Screws: Copper alloy, natural finish
Terminals (NC Version): Tinned copper alloy
Insulation: Thermoplastic, per Mil-P-22985, Type II, Class 1
Handles: Thermoplastic, Type 6, per Mil-M-20693, Type II
Shielded (NC Version): Machined from copper alloy, nickel-plated

**See Page 93 for Mechanical Drawings**

## Ordering Information

| Part No. | Conductors | Terminals | Handle | Notes |
|---|---|---|---|---|
| **TT or Bantam Plugs** | | | | |
| TT253 | 3 | Screw | Black | |
| TT253N | 3 | Screw | Black | Nickel-plated finger |
| TT253NC | 3 | Solder | Black | Nickel-plated finger |
| TT254 | 3 | Screw | Red | |
| TT254N | 3 | Screw | Red | Nickel-plated finger |
| TT254NC | 3 | Solder | Red | Nickel-plated finger |
| **Mil-Style 1/4 Plugs** | | | | |
| 480 | 3 | Screw | Black | 0.206" OD |
| 482 | 3 | Screw | Red | |
| 482N | 3 | Screw | Red | Nickel-plated finger |
| 482NC | 3 | Solder | Red Shielded | Nickel-plated finger |
| 482NCP | 3 | Solder | Red | Nickel-plated finger |
| 483 | 3 | Screw | Black | |
| 483N | 3 | Screw | Black | Nickel-plated finger |
| 483NC | 3 | Screw | Black Shielded | Nickel-plated finger |
| 483NCP | 3 | Solder | Black | Nickel-plated finger |
| 484 | 3 | Screw | Red | 0.206" OD |
| 485NC | 3 | Solder | Shielded | Nickel-plated finger |


5555 North Elston Avenue / Chicago, IL 60630
Phone: 773-792-2700 / Fax: 773-792-2129

* Please visit the product pages on our website for the most up-to-date product information



# Plug Series Dimension Drawings

## Littel Plug 1/4" Series

### 260

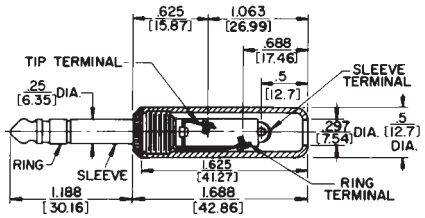


**No. 260 typical** — shown with screw-type terminals and plastic handle.

### 280 Typical

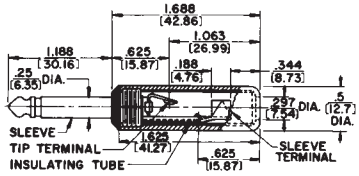


**No. 280 typical** — shown with solder lug terminals, cord clamp and shielded handle.

### 188

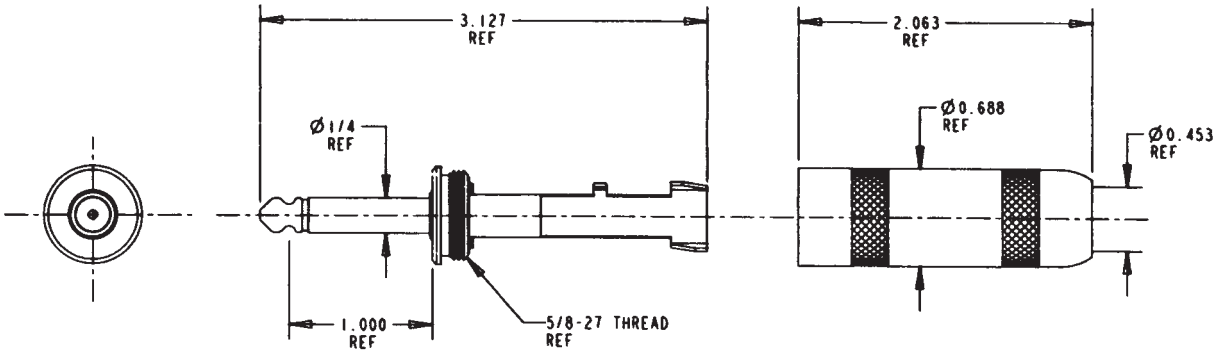


### 187BL

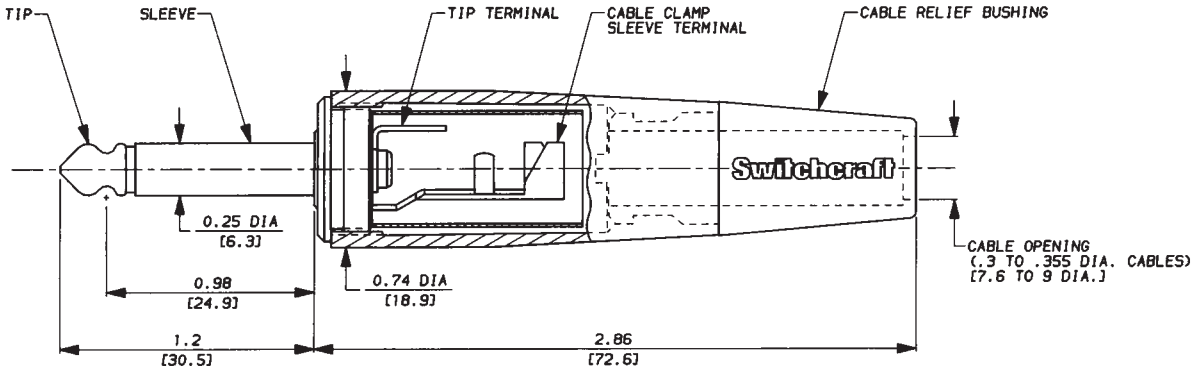


**No. 187BL (Typical)**

Switc

# Plug Series Dimension Drawings

## Littel Right Angle 1/4", Silent, Super Heavy Duty Plug Series

### 228 Right Angle 1/4" Plugs

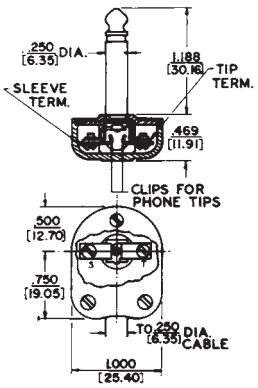


### 236 Right Angle 1/4" Plugs

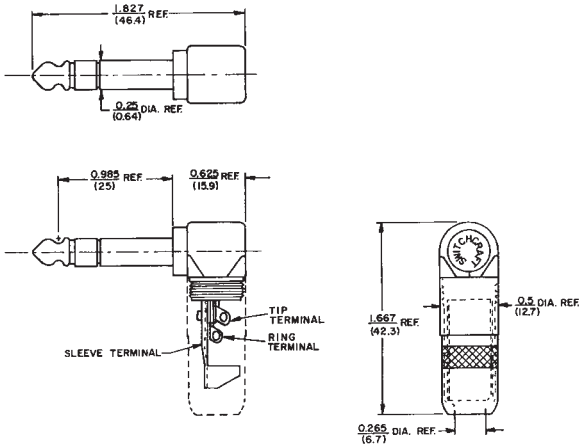


No. 236

### 172

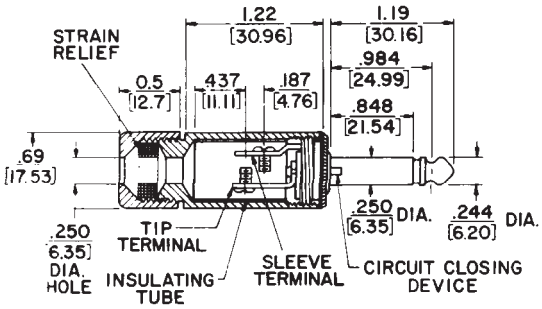


### 181 Silent Plug

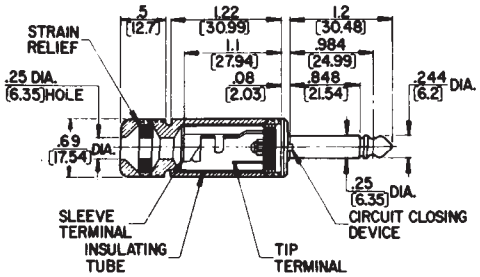


### 174S Super Heavy Duty Plug

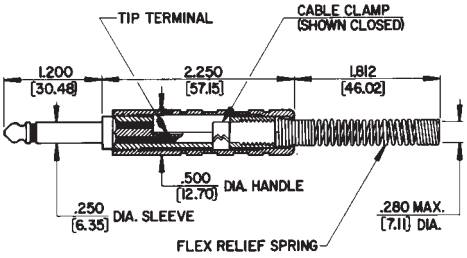


DIMENSIONS ARE FOR REFERENCE ONLY Inch / (mm)



5555 North Elston Avenue / Chicago, IL 60630
Phone: 773-792-2700 / Fax: 773-792-2129

# Plug Series Drawings

## Tini, Micro Plug Series

### 740, 750 Tini-Plugs

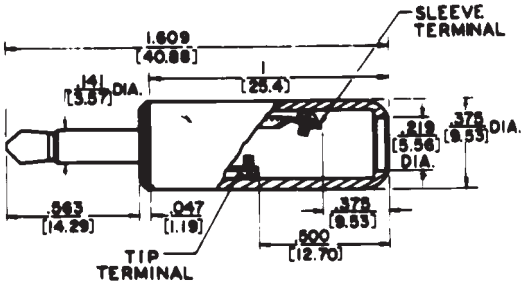


740 Screw Terminals Series

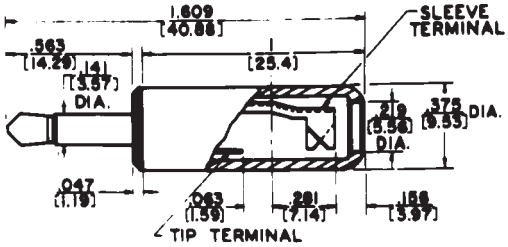


750 Clamp-Lug Terminals

### 850, 851 Micro Plugs

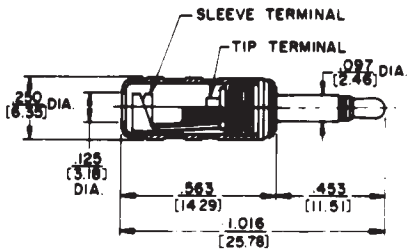


850 (typical) Series

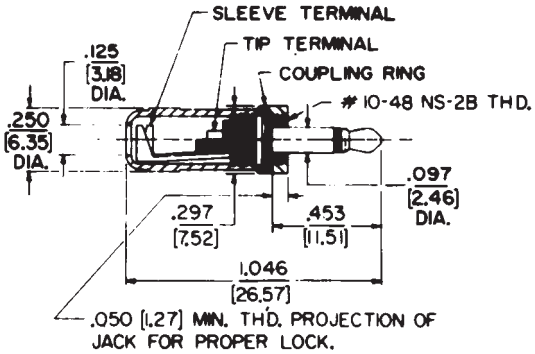


851 (typical) Series

Switcl

## 35HDNN, 35HDBAU, 35HDNAU

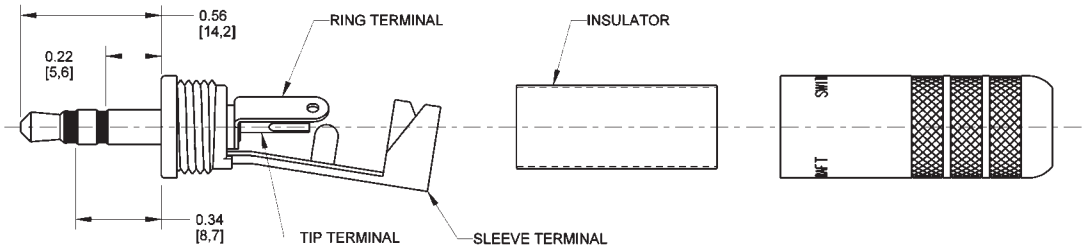


## 35HDRANN, 35HDRABAU, 35HDRAAU

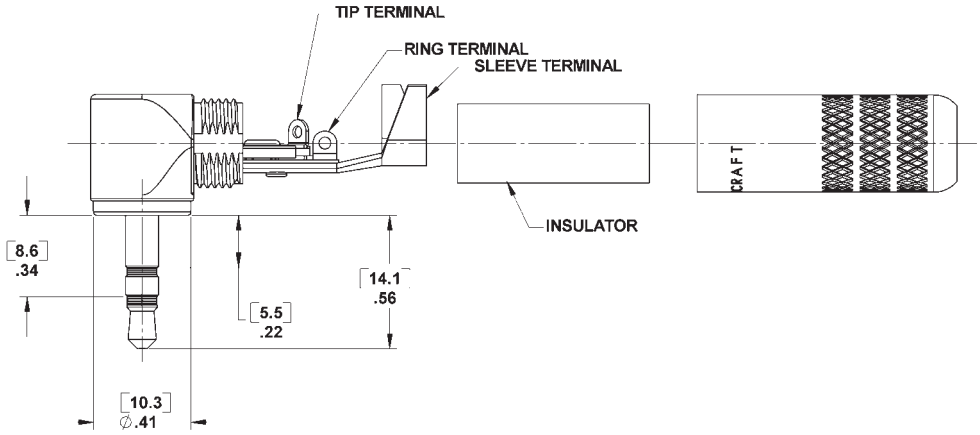


DIMENSIONS ARE FOR REFERENCE ONLY Inch (mm)

Switchcraft®
www.switchcraft.com
5555 North Elston Avenue / Chicago, IL 60630
Phone: 773-792-2700 / Fax: 773-792-2129

# Plug Series Drawings

## Phono and Phone Right Angle Plug Series

### 3502, 3502A, 35581 Phono Plug

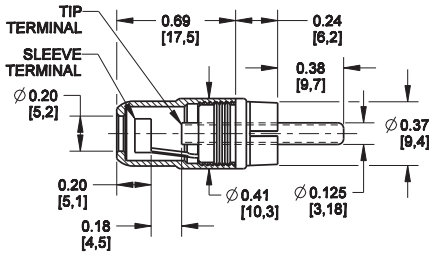


3502 Series

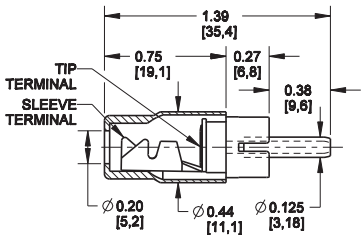


35581 Series

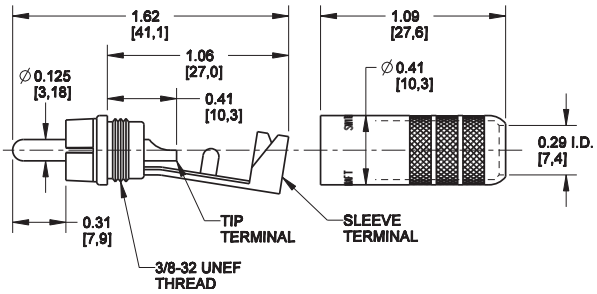


3502A Series

### 3502RA Plug

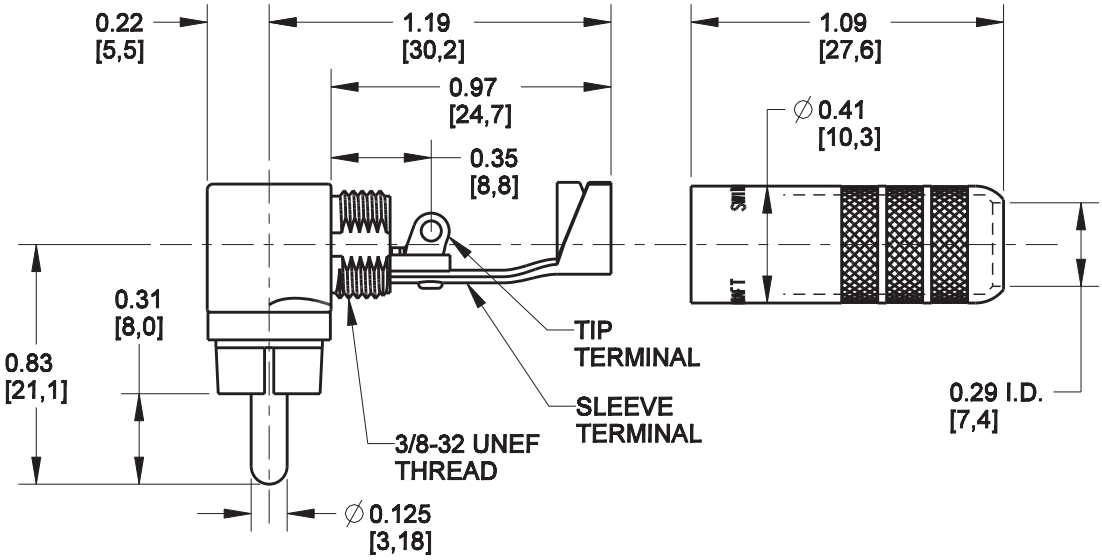


Switc

# TT or Bantam, Mil-Style 1/4" Plug Series

## TT253, TT253NC Plug

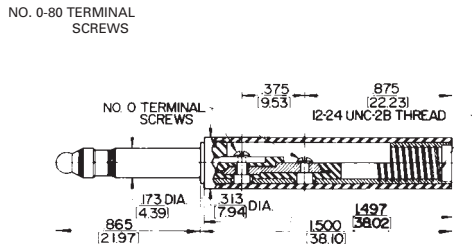


TT253 Series

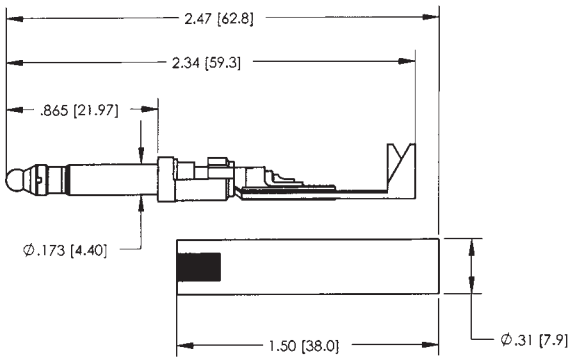


TT253NC Series

## 480, 482, 482NC, 484 Mil-Style 1/4" Plug

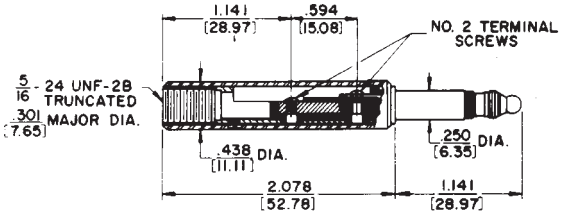


480 Series

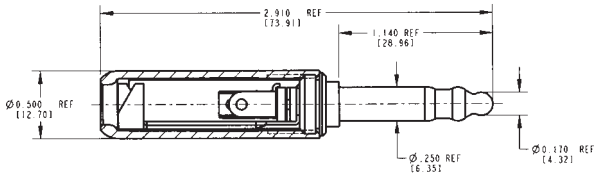


482NC Series

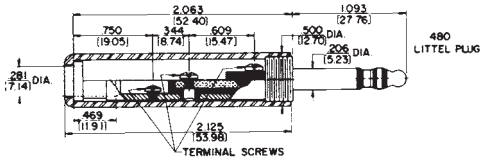


482 Series

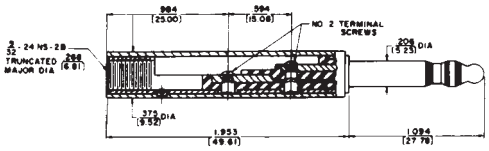


484 Series

DIMENSIONS ARE FOR REFERENCE ONLY Inch / (mm)

Switchcraft®
www.switchcraft.com
5555 North Elston Avenue / Chicago, IL 60630
Phone: 773-792-2700 / Fax: 773-792-2129

# Switch Series

## Guitar and Knobs, and Broadcast Switch Series

The 12000 Series switches are premium grade switches used primarily in guitars as pick-up switches. The largest names in the industry rely on our switches for quality and durability. Our 84000 Series and PL Series switches are used in broadcast studios, theater lighting, anywhere large illuminated switches are needed.

**Note: Knobs must be ordered separately.**

### Specifications - 12000 Series

**Electrical**

Contact Ratings: Fine silver contacts rated at 3A, 300W maximum AC non-inductive load standard. Other contacts available
Leakage Resistance: 1,000 MW or greater
Dielectric Strength: 250 VDC

**Materials**

Frame: Copper alloy, plated (3,000, 13,000); Steel, plated (12,000)
Bushing and Shaft: Copper alloy, plated
Springs: Copper alloy
Knob: Black molded thermoplastic
Mounting Hardware: Knurled copper alloy locknut T10711, supplied. P10531 hex locknut, special order
Insulation: Rigid plastic spacers with plastic tubing through stack. Rigid plastic and/or thermoplastic lifters. Thermoplastic cam on actuator end

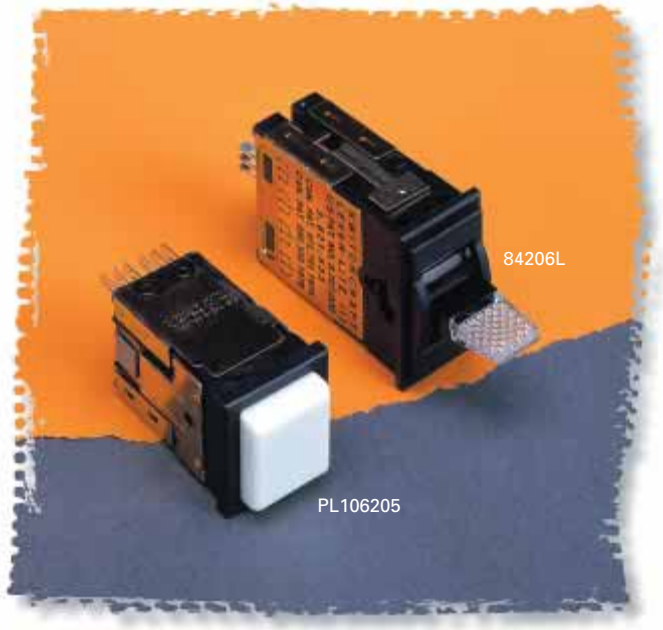


### Specifications - 8400 Series

**Electrical**

Temperature Range: -22˚F to 158˚F (-30˚C to +70˚C)
Dielectric Strength: 1 kV DC
Leakage Resistance: 1,000 MW or greater

**Materials**

Mounting/Retaining Clips and Covers: Steel, plated
Contact Ratings: Gold crossbar rated at 1A, 200W Maximum AC non-inductive loads
(continued on next page)

(continued from previous page)

Springs: Copper alloy, plated
Lamp Terminals: Copper alloy, plated
Lamp Socket: Zinc, plated
Terminals: Copper alloy, plated, straight solder lugs
Housing, Escutcheon, Knob, Actuator and Switching Stacks Insulation: Molded plastic

## Specifications - PL Series

PUSH-LITE Switches Series and PL Indicators

### Contacts

Welded crossbar Gold Alloy, rated at 2 amps., 200 watts max., AC non-inductive load.

### Electrical

6,000 Minimum Life (Gold Alloy Contacts) per UL 1054.

### Materials

Push-Lite Switch Assemblies:

Housing, Lifters, Switch Modules, Barriers and Pushbuttons: Molded Plastics
Contacts Springs: Phosphor Bronze, Silver Plated
Lamp Terminals: Brass, Silver plated
Lamp Socket, Light Divider and Yoke Assembly: Nickel Silver
Mounting Bracket and Retaining Clips: Steel with iridescent iridite over Cadmium Plating

Series PL Pushbuttons:

Housing, Color Filter Inserts and Display Screens: High impact thermoplastic

PL Indicators:

Housing: Molded glass filled Plastics
Mounting Bracket: Steel, iridescent over cadmium Plating.
Lamp Retainer and Terminals: Nickel Silver.
Display Screen (Pushbutton): Molded Plastics.

## Ordering Information

| Part Number | Circuitry | Description |
|---|---|---|
| **Guitar Switches** | | |
| 12010 | SPST(NC)/SPST(NC) | Straight, nickel finish, riveted silver contacts |
| 12011 | SPST(NC)/SPST(NC) | Straight, bright brass finish, riveted silver contacts |
| 12012 | SPDT(non-shorting)/SPST(NC) | Right angle, nickel finish, welded silver contacts |
| 12013 | SPST(NC)/SPST(NC) | Right angle, nickel finish, welded silver contacts |
| 12014 | SPST(NC)/SPST(NC) | Right angle, black finish, welded silver contacts |
| 12015 | DPDT(NC)/DPDT(NC) | Right angle, nickel finish, welded silver contacts |
| 12016 | SPST(NC)/SPST(NC) | Right angle, bright brass finish, riveted silver contacts |
| 12017 | SPST(NC/SPST(NC) | Right angle, nickel finish, welded gold contacts |
| **Knobs** | | |
| T12742 | | Black |
| T12745 | | White |
| T127410 | | Ivory |
| P2912 | | Amber |
| **Broadcast Switches** | | |
| 84206L | DPDT | 2 Position, locking |
| 84306L | SPDT(non-shorting) both sides | 3 Position, locking |
| 84312L | DPDT both sides | 3 Position, locking |
| 84324L | DPDT both sides | 3 Position, locking |
| K131 | | Filter kit, 3 of ea. (amb, blu, grn, red, wht, and yel) |
| PL106205 | DPDT | Momentary, single lamp |
| PL206205 | DPDT | Momentary, twin lamp |
| PL106705 | DPDT | Push-lock/Push-release, single lamp |
| PL206705 | DPDT | Push-lock/Push-release, twin lamp |

**See Next Page for Mechanical Drawings**



5555 North Elston Avenue / Chicago, IL 60630
Phone: 773-792-2700 / Fax: 773-792-2129

# Switch Series Drawings

## Guitar and Knobs, and Broadcast Switch Series

### 12000 Series RA Lev-R® Switches

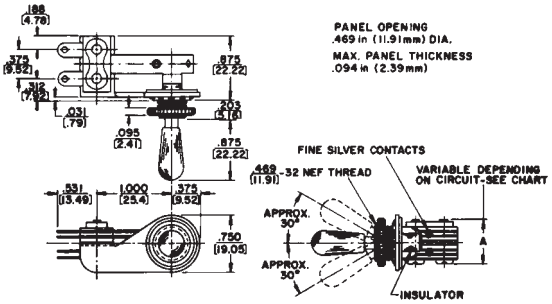


### 12000 Series Straight Lev-R® Switches

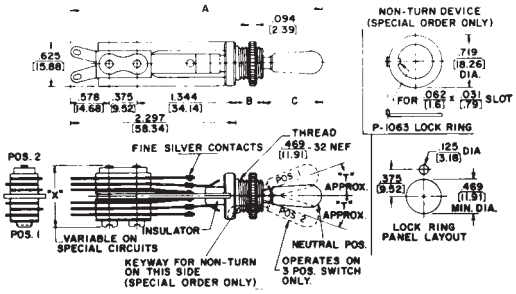


### 84000 Series Lever-Lite® Switches

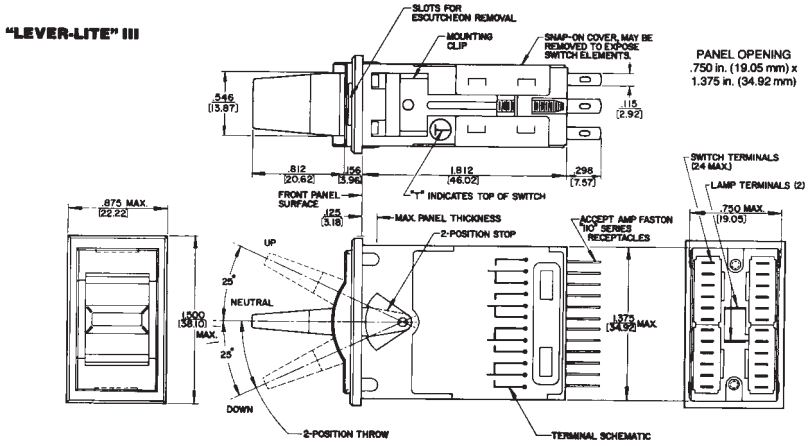


### PL Series Push-Lite® Switches

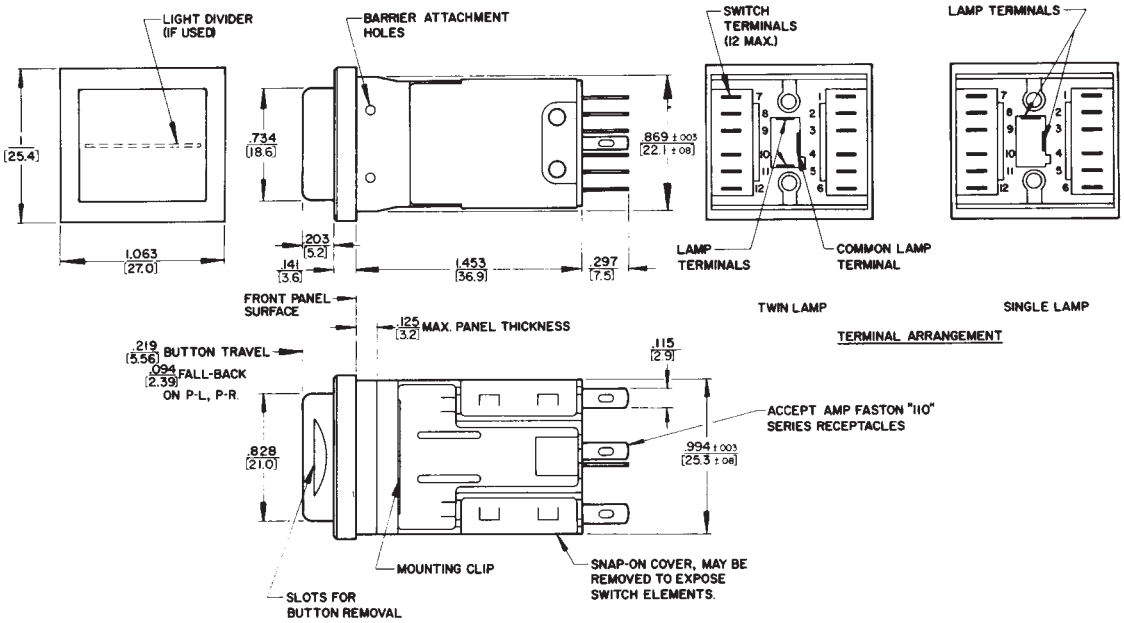

* Please visit the product pages on our website for the most up-to-date product information

# NOTES



DIMENSIONS ARE FOR REFERENCE ONLY Inch (mm)

Switchcraft®
www.switchcraft.com
5555 North Elston Avenue / Chicago, IL 60630
Phone: 773-792-2700 / Fax: 773-792-2129

# INDEX




05AD05 ....45
05AK05 ....45
05AK25 ....45
05AN05 ....45
05AN15 ....45
05AN25 ....45
05AN80 ....45
05AU05 ....45
05AU80 ....45
05BL5M ....53
05DL5M ....53
05GM5M ....53
10BF10 ....45
10BK10 ....45
10BN10 ....45
11 ....66
111 ....66
112B ....66
113BPC1M ....66
114B ....66
114BPC ....66
114BPC1M ....66
114BPCS ....66
120 ....66
12010 ....95
12011 ....95
12012 ....95
12013 ....95
12014 ....95
12015 ....95
12016 ....95
12017 ....95
121 ....66
1238 ....66
125 ....68
128 ....66
12A ....66
12B ....66
131 ....66
133 ....66
142A ....68
14B ....66
151 ....68
152 ....68
152B ....68
153 ....68
154 ....68
155 ....68
15AK15 ....45
172 ....84
174S ....84
181 ....84
184 ....84
187 ....84
187B ....84
188 ....84
18QD18 ....45
18QF18 ....45
18QH18 ....45
20QD20N ....45
20QF20N ....45
20QH20N ....45
226 ....84
228 ....84
236 ....84
238 ....84
240 ....84
245 ....84
250 ....84
2501F ....53
2501M ....53
2501MP ....53
25AF25 ....45
25AK25 ....45
25AK82 ....45
25AN25 ....45
260 ....84
267 ....84
270 ....84
280 ....84
281 ....84
285 ....84
285L ....84
290 ....84
297 ....84
299 ....84
30AK30 ....45
30AN30 ....45
30AR30 ....45
321 ....63
322 ....63
323 ....63
324 ....63
330F1 ....64
330F2 ....64
330P ....64
332A ....64
336A ....64
340 ....64
345A ....64
349A ....64
3501FP ....70
3501FR ....70
3502 ....86
3502A ....86
3502AAU ....86
3502ABAU ....86
3502L ....86
3502RA ....86
3502RAAU ....86
3502RABAU ....86
3503 ....70
3514PC ....70
3517PC ....70
352A ....64
35581 ....86
35582 ....86
35585 ....86
35HDBAU ....86
35HDNAU ....86
35HDNN ....86
35HDRAAU ....86
35HDRABAU ....86
35HDRANN ....86
35PM1 ....68
35PM2A ....68
35RAPC2AV ....68
35RAPC2BH3 ....68
35RAPC3BH3 ....68
35RAPC4BH3 ....68
35RAPC7J ....68
35RAPC7JS ....68
361A ....64
362A ....64
363 ....64
365 ....64
370A ....64
374 ....64
376 ....64
377 ....64
383A ....63
384A ....63
386A ....63
387A ....63
389 ....63
390 ....63
41 ....68
42A ....68
44 ....64
480 ....87
482 ....87
482N ....87
482NC ....87
482NCP ....87
483 ....87
483N ....87
483NC ....87
483NCP ....87
484 ....87
485NC ....87
516-090-000-301 ....20
516-090-000-302 ....20
516-120-000-101 ....20
516-120-000-102 ....20
516-290-500 ....20
516-290-590 ....20
57GB5F ....53
57PC5F ....53
57PC5FS ....53
580 ....84
712A ....71
722A ....71
732A ....71
740 ....86
750 ....86
755 ....86
760 ....71
760K ....71
765 ....71
780 ....86
80 ....66
830 ....66
84206L ....95
84306L ....95
84312L ....95
84324L ....95
850 ....86
851 ....86
855 ....86
860 ....71
865 ....71
88 ....66
880 ....86
881 ....86
A*F ....46
A*FB ....46


Switc

# INDEX




A*FBAU ....46
A*FL ....46
A*M ....46
A*MB ....46
A*MBAU ....46
A*ML ....46
AA*F ....46
AA*FB ....46
AA*FBAU ....46
AA*FL ....46
AA*M ....46
AA*MB ....46
AA*MBAU ....46
AA*ML ....46
AAA*FBAUZ ....46
AAA*FBZ ....46
AAA*FPBAUZ ....46
AAA*FPBZ ....46
AAA*FPZ ....46
AAA*FZ ....46
AAA*MBAUZ ....46
AAA*MBZ ....46
AAA*MPBAUZ ....46
AAA*MPBZ ....46
AAA*MPZ ....46
AAA*MZ ....46
B*F ....47
B*FB ....47
B*M ....47
B*MB ....47
BPJF** ....70
BPJF**AU ....70
BPJJ** ....70
BPJJ**AU ....70
BPJR** ....70
BPJR**AU ....70
C*F ....47
C*FB ....47
C*M ....47
C*MB ....47
D*F ....47
D*FB ....47
D*FBAU ....47
D*FS ....47
D*M ....47
D*MB ....47
D*MBAU ....47
D*MS ....47
E111L ....68
E112BL ....68
E3FSC ....47
E3FSCB ....47
E3FSCBAU ....47
E3MSC ....47
E3MSCB ....47
E3MSCBAU ....47
EH13942 ....52
EHBNC2 ....52
EHBNCSC ....52
EHCAT62 ....52
EHRCA2 ....52
EHRCABNC ....52
EHUSB2 ....52
HP75BNC1 ....54
HP75BNC12 ....54
HP75BNC2 ....54
HP75BNC7 ....54
HP75BNC9 ....54
HPCC4F ....51
HPCC4RAF ....51
HPCI4F ....51
HPCP410PC ....50
HPCP410RA ....50
HPCP41F ....50
HPCP41F1 ....50
HPCP420PC ....50
HPCP420RA ....50
HPCP42F ....50
HPCP42F1 ....50
HPCPK112F ....30
HPCPK112F1 ....30
HPCPK1B ....30
HPCPK324F ....30
HPCPK324F1 ....30
HPCPK3B ....30
HPCPR410PC ....50
HPCPR41F ....50
HPCPR41F1 ....50
HPCPR420PC ....50
HPCPR42F ....50
HPCPR42F1 ....50
J3FS ....48
K131 ....95
K3FS ....48
K459 ....4
K460 ....4
MBPK175T ....43
MD10 ....45
MD15 ....45
MD3 ....45
MD6 ....45
MT334B ....70
MT48FN ....26
MT48HN ....26
MT48K1FN ....24
MT48K1HN ....24
MT48K1NN ....24
MT48K1NS ....24
MT48K3FN ....24
MT48K3HN ....24
MT48K3NN ....24
MT48NN ....26
MT48NS ....26
MT52FN ....26
MT52HN ....26
MT52K1FN ....24
MT52K1HN ....24
MT52K1NN ....24
MT52K1NS ....24
MT52K3FN ....24
MT52K3HN ....24
MT52K3NN ....24
MT52NN ....26
MT52NS ....26
MTP24K7 ....18
MTP48K1NO ....14
MTP48K1NS ....14
MTP48K3BPNS ....18
MTP48K3NO ....14
MTP48K3NS ....14
MTP48K3PBNO ....18
MTP48K3SNO ....14
MTP52K3BPNO ....18
MTPFA48K1NO ....8
MTPFA48K1NS ....8
MTPH48K1NO ....5
MTPH48K1NS ....5
MTPH48K3NO ....5
MTPH48K3NS ....5
MTPH48K3SNO ....5
MVEZNPK175T ....42
MVJ*75T ....39
MVJ*NT ....39
MVP32K1*75T ....37
MVP32K1*NT ....37
MVP32K2*75T ....37
MVP32K2*NT ....37
MVP32K3*75T ....37
MVP32K3*NT ....37
P*F ....48
P*FB ....48
P*M ....48
P*MB ....48
P2912 ....95
PC142A ....68
PD3FSC1 ....48
PD3FSC1AU ....48
PD3MSC1 ....48
PD3MSC1AU ....48
PL106205 ....95
PL106705 ....95
PL206205 ....95
PL206705 ....95
PT1LA ....4
PT2B ....4
QGPK116FB ....32
QGPK116MB ....32
QGPK18M8FB ....32
QGPK1B ....32
QGPK332MFB ....32
QGPK3B ....32
R*FBAUZ ....48
R*FBZ ....48
R*FZ ....48
R*MBAUZ ....48
R*MBZ ....48
R*MZ ....48
RA49B11 ....66
RA49C14B ....66
RN112APC ....66
RS422H48N081 ....12
RS422H4N161 ....12
RS422H4N162 ....12
RS422H4N242 ....12
RS422V4N081 ....12
RS422V4N161 ....12
RS422V4N162 ....12
RS422V4N242 ....12
RS422V4N322 ....12
S3F5M ....63
S3FM ....63
S5F3M ....63
S760 ....71
S760K ....71
S765 ....71
T127410 ....95


Switchcraft®
www.switchcraft.com
5555 North Elston Avenue / Chicago, IL 60630
Phone: 773-792-2700 / Fax: 773-792-2129

# INDEX




T12742 .....95
T12745 .....95
T3F .....48
TA*F .....49
TA*FB.....49
TA*FL .....49
TA*M.....49
TA*MB .....49
TA*ML.....49
TA01 .....63
TA02 .....63
TA04 .....63
TA05 .....63
TB*M .....49
TB*MB .....49
TT1 .....45
TT10 .....45
TT122 .....45
TT124 .....45
TT126 .....45
TT127 .....45
TT128 .....45
TT2 .....45
TT253 .....87
TT253N.....87
TT253NC .....87
TT254 .....87
TT254N.....87
TT254NC .....87
TT3 .....45
TT34B .....70
TT34BN .....81
TT34BNY.....70
TT4 .....45
TT5 .....45
TT6 .....45
TT7 .....45
TT8 .....45
TT9 .....45
TT96EDACNO.....20
TT96EDACNS .....20
TTD1.....45
TTD10.....45
TTD2.....45
TTD3.....45
TTD4.....45
TTD5.....45
TTD6.....45
TTD7.....45
TTD8.....45
TTD9.....45
TTEZN****0 .....10
TTP96ASFN.....28
TTP96ASHN .....28
TTP96ASNN .....28
TTP96K1FN .....22
TTP96K1HN .....22
TTP96K1NN .....22
TTP96K3BPNS .....18
TTP96K3FN .....22
TTP96K3HN .....22
TTP96K3NN .....22
TTP96K5BPNS .....18
TTPFA96K1NO .....8
TTPFA96K1NS .....8
TTPH96K1NO .....5
TTPH96K1NS .....5
TTPH96K3NO .....5
TTPH96K3NS .....5
TTPW96K1HN.....16
TTPW96K1NN.....16
TTPW96K1NS .....16
TTPW96K3HN.....16
TTPW96K3NN.....16
TTPW96K3NS .....16
TY*F .....49
VAPK1HD*75T.....40
VAPK1HD*NT .....40
VAPK1SD*75T .....40
VAPK1SD*NT.....40
VAPK3HD*75T.....40
VAPK3HD*NT .....40
VAPK3SD*75T .....40
VAPK3SD*NT.....40
VJHD*75TX.....36
VJHD*NTX.....36
VJSD*75TX.....36
VJSD*NTX .....36
VMAFN.....40
VMPP .....44
VMVHD*75T.....40
VMVHD*NT .....40
VMVSD*75T .....40
VMVSD*NT.....40
VPP24K1HD*75T.....34
VPP24K1HD*NT.....34
VPP24K1SD*75T.....34
VPP24K1SD*NT .....34
VPP24K3HD*75T.....34
VPP24K3HD*NT.....34
VPP24K3SD*75T.....34
VPP24K3SD*NT .....34
VPP26K1HD*75T.....34
VPP26K1HD*NT.....34
VPP26K1SD*75T.....34
VPP26K1SD*NT .....34
VPP26K3HD*75T.....34
VPP26K3HD*NT.....34
VPP26K3SD*75T.....34
VPP26K3SD*NT .....34
VSPP.....44
WMT334B.....70
WTT34B .....70
YMT334BN .....70
Z15J.....66


Switc

ООО «ЛайфЭлектроникс» “LifeElectronics” LLC

ИНН 7805602321 КПП 780501001 Р/С 40702810122510004610 ФАКБ "АБСОЛЮТ БАНК" (ЗАО) в г.Санкт-Петербурге К/С 30101810900000000703 БИК 044030703

*Компания «Life Electronics» занимается поставками электронных компонентов импортного и отечественного производства от производителей и со складов крупных дистрибьюторов Европы, Америки и Азии.*

*С конца 2013 года компания активно расширяет линейку поставок компонентов по направлению коаксиальный кабель, кварцевые генераторы и конденсаторы (керамические, пленочные, электролитические), за счёт заключения дистрибьюторских договоров*

*Мы предлагаем:*

- *Конкурентоспособные цены и скидки постоянным клиентам.*
- *Специальные условия для постоянных клиентов.*
- *Подбор аналогов.*
- *Поставку компонентов в любых объемах, удовлетворяющих вашим потребностям.*

- *Приемлемые сроки поставки, возможна ускоренная поставка.*
- *Доставку товара в любую точку России и стран СНГ.*
- *Комплексную поставку.*
- *Работу по проектам и поставку образцов.*
- *Формирование склада под заказчика.*

- *Сертификаты соответствия на поставляемую продукцию (по желанию клиента).*
- *Тестирование поставляемой продукции.*
- *Поставку компонентов, требующих военную и космическую приемку.*
- *Входной контроль качества.*
- *Наличие сертификата ISO.*

*В составе нашей компании организован Конструкторский отдел, призванный помогать разработчикам, и инженерам.*

*Конструкторский отдел помогает осуществить:*

- *Регистрацию проекта у производителя компонентов.*
- *Техническую поддержку проекта.*
- *Защиту от снятия компонента с производства.*
- *Оценку стоимости проекта по компонентам.*
- *Изготовление тестовой платы монтаж и пусконаладочные работы.*

*Тел: +7 (812) 336 43 04 (многоканальный)*
*Email: org@lifeelectronics.ru*

***www.lifeelectronics.ru***