Three-wire Serial EEPROM

2K (256 x 8 or 128 x 16)

4K (512 x 8 or 256 x 16)

AT93C56A
AT93C66A

Not Recommended for New Design. Replaced by AT93C56B or AT93C66B.

1. Features

- **Low-voltage and Standard-voltage Operation**
  - **2.7 (V_{CC} = 2.7V to 5.5V)**
  - **1.8 (V_{CC} = 1.8V to 5.5V)**
- **User-selectable Internal Organization**
  - **2K: 256 x 8 or 128 x 16**
  - **4K: 512 x 8 or 256 x 16**
- **Three-wire Serial Interface**
- **Sequential Read Operation**
- **2 MHz Clock Rate (5V)**
- **Self-timed Write Cycle (10 ms Max)**
- **High Reliability**
  - **Endurance: 1 Million Write Cycles**
  - **Data Retention: 100 Years**
- **Automotive Devices Available**
- **8-lead JEDEC PDIP, 8-lead JEDEC SOIC, 8-lead EIAJ SOIC, 8-lead Ultra Thin mini-MAP (MLP 2x3), 8-lead Ultra Lead Frame Land Grid Array (ULA), 8-lead TSSOP and 8-ball dBGA2 Packages**

2. Description

The AT93C56A/66A provides 2048/4096 bits of serial electrically erasable programmable read-only memory (EEPROM) organized as 128/256 words of 16 bits each (when the ORG pin is connected to VCC) and 256/512 words of 8 bits each (when the ORG pin is tied to ground). The device is optimized for use in many industrial and commercial applications where low-power and low-voltage operations are essential. The AT93C56A/66A is available in space-saving 8-lead PDIP, 8-lead JEDEC SOIC, 8-lead EIAJ SOIC, 8-lead Ultra Thin mini-MAP (MLP 2x3), 8-lead Ultra Lead Frame Land Grid Array (ULA), 8-lead TSSOP, and 8-ball dBGA2 packages.

The AT93C56A/66A is enabled through the Chip Select pin (CS) and accessed via a three-wire serial interface consisting of Data Input (DI), Data Output (DO), and Shift Clock (SK). Upon receiving a read instruction at DI, the address is decoded and the data is clocked out serially on the data output pin DO. The write cycle is completely self-timed and no separate erase cycle is required before write. The write cycle is only enabled when the part is in the Erase/Write Enable State. When CS is brought “high” following the initiation of a write cycle, the DO pin outputs the Ready/Busy status of the part.

The AT93C56A/66A is available in 2.7V to 5.5V and 1.8V to 5.5V versions.

3378O–SEEPR–11/09

Table 2-1. Pin Configurations

Pin Name	Function
CS	Chip Select
SK	Serial Data Clock
DI	Serial Data Input
DO	Serial Data Output
GND	Ground
VCC	Power Supply
ORG	Internal Organization
NC	No Connect

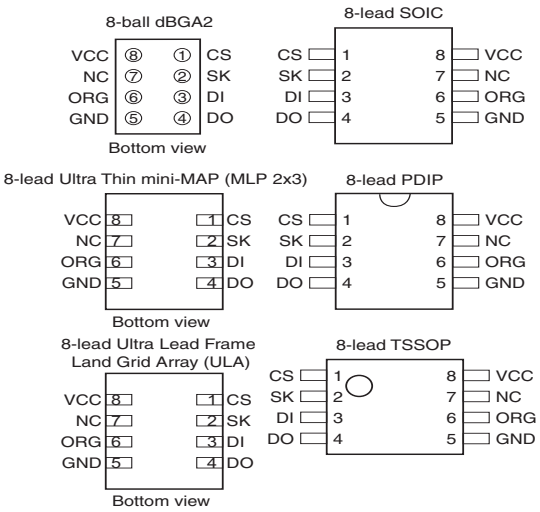

3. Absolute Maximum Ratings*

Operating Temperature ..... –55°C to +125°C

Storage Temperature..... –65°C to +150°C

Voltage on Any Pin
with Respect to Ground ..... –1.0V to +7.0V

Maximum Operating Voltage 6.25V

DC Output Current..... 5.0 mA

*NOTICE: Stresses beyond those listed under “Absolute Maximum Ratings” may cause permanent damage to the device. This is a stress rating only, and functional operation of the device at these or any other conditions beyond those indicated in the operational sections of this specification is not implied. Exposure to absolute maximum rating conditions for extended periods may affect device reliability

Figure 3-1. Block Diagram

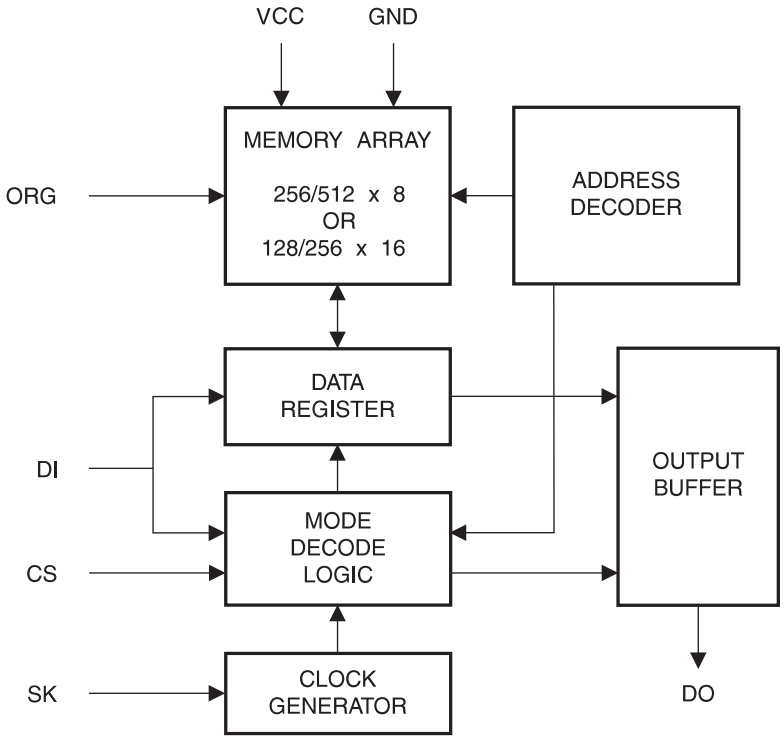

Note: When the ORG pin is connected to VCC, the x 16 organization is selected. When it is connected to ground, the x 8 organization is selected. If the ORG pin is left unconnected and the application does not load the input beyond the capability of the internal 1 Meg ohm pullup, then the x 16 organization is selected.

Table 3-1. Pin Capacitance(Note:)

Applicable over recommended operating range from T_A = 25°C, f = 1.0 MHz, V_{CC} = +5.0V (unless otherwise noted)

Symbol	Test Conditions	Max	Units	Conditions
C_{OUT}	Output Capacitance (DO)	5	pF	V_{OUT} = 0V
C_{IN}	Input Capacitance (CS, SK, DI)	5	pF	V_{IN} = 0V

Note: 1. This parameter is characterized and is not 100% tested.

Table 3-2. DC Characteristics

Applicable over recommended operating range from: T_{AI} = –40°C to +85°C, V_{CC} = +1.8V to +5.5V, V_{CC} = +1.8V to +5.5V (unless otherwise noted)

Symbol	Parameter	Test Condition		Min	Typ	Max	Unit
V_{CC1}	Supply Voltage			1.8		5.5	V
V_{CC2}	Supply Voltage			2.7		5.5	V
V_{CC3}	Supply Voltage			4.5		5.5	V
I_{CC}	Supply Current	V_{CC} = 5.0V	READ at 1.0 MHz		0.5	2.0	mA
			WRITE at 1.0 MHz		0.5	2.0	mA
I_{SB1}	Standby Current	V_{CC} = 1.8V	CS = 0V		0.4	1.0	µA
I_{SB2}	Standby Current	V_{CC} = 2.7V	CS = 0V		6.0	10.0	µA
I_{SB3}	Standby Current	V_{CC} = 5.0V	CS = 0V		10.0	15.0	µA
I_{IL}	Input Leakage	V_{IN} = 0V to V_{CC}			0.1	3.0	µA
I_{OL}	Output Leakage	V_{IN} = 0V to V_{CC}			0.1	3.0	µA
V_{IL1}(Note:) V_{IH1}(Note:)	Input Low Voltage Input High Voltage	2.7V ≤ V_{CC} ≤ 5.5V		–0.6 2.0		0.8 V_{CC} + 1	V
V_{IL2}(Note:) V_{IH2}(Note:)	Input Low Voltage Input High Voltage	1.8V ≤ V_{CC} ≤ 2.7V		–0.6 V_{CC} x 0.7		V_{CC} x 0.3 V_{CC} + 1	V
V_{OL1} V_{OH1}	Output Low Voltage Output High Voltage	2.7V ≤ V_{CC} ≤ 5.5V	I_{OL} = 2.1 mA			0.4	V
			I_{OH} = –0.4 mA	2.4			V
V_{OL2} V_{OH2}	Output Low Voltage Output High Voltage	1.8V ≤ V_{CC} ≤ 2.7V	I_{OL} = 0.15 mA			0.2	V
			I_{OH} = –100 µA	V_{CC} – 0.2			V

Note: 1. V_{IL} min and V_{IH} max are reference only and are not tested.

Table 3-3. AC Characteristics

Applicable over recommended operating range from T_{AI} = –40°C to + 85°C, V_{CC} = As Specified, CL = 1 TTL Gate and 100 pF (unless otherwise noted)

Symbol	Parameter	Test Condition		Min	Typ	Max	Units
f_{SK}	SK Clock Frequency	$4.5V \le V_{CC} \le 5.5V$ $2.7V \le V_{CC} \le 5.5V$ $1.8V \le V_{CC} \le 5.5V$		0 0 0		2 1 0.25	MHz
t_{SKH}	SK High Time	$2.7V \le V_{CC} \le 5.5V$ $1.8V \le V_{CC} \le 5.5V$		250 1000			ns
t_{SKL}	SK Low Time	$2.7V \le V_{CC} \le 5.5V$ $1.8V \le V_{CC} \le 5.5V$		250 1000			ns
t_{CS}	Minimum CS Low Time	$2.7V \le V_{CC} \le 5.5V$ $1.8V \le V_{CC} \le 5.5V$		250 1000			ns
t_{CSS}	CS Setup Time	Relative to SK	$2.7V \le V_{CC} \le 5.5V$ $1.8V \le V_{CC} \le 5.5V$	50 200			ns
t_{DIS}	DI Setup Time	Relative to SK	$2.7V \le V_{CC} \le 5.5V$ $1.8V \le V_{CC} \le 5.5V$	100 400			ns
t_{CSH}	CS Hold Time	Relative to SK		0			ns
t_{DIH}	DI Hold Time	Relative to SK	$2.7V \le V_{CC} \le 5.5V$ $1.8V \le V_{CC} \le 5.5V$	100 400			ns
t_{PD1}	Output Delay to “1”	AC Test	$2.7V \le V_{CC} \le 5.5V$ $1.8V \le V_{CC} \le 5.5V$			250 1000	ns
t_{PD0}	Output Delay to “0”	AC Test	$2.7V \le V_{CC} \le 5.5V$ $1.8V \le V_{CC} \le 5.5V$			250 1000	ns
t_{SV}	CS to Status Valid	AC Test	$2.7V \le V_{CC} \le 5.5V$ $1.8V \le V_{CC} \le 5.5V$			250 1000	ns
t_{DF}	CS to DO in High Impedance	AC Test CS = V_{IL}	$2.7V \le V_{CC} \le 5.5V$ $1.8V \le V_{CC} \le 5.5V$			150 400	ns
t_{WP}	Write Cycle Time		$1.8V \le V_{CC} \le 5.5V$	0.1	3	10	ms
Endurance(Note:)	5.0V, 25°C			1M			Write Cycles

Note: 1. This parameter is characterized and is not 100% tested.

Table 3-4. Instruction Set for the AT93C56A and AT93C66A

Instruction	SB	Op Code	Address		Data		Comments
			x 8	x 16	x 8	x 16	
READ	1	10	$A_8 – A_0$	$A_7 – A_0$			Reads data stored in memory, at specified address.
EWEN	1	00	11XXXXXXX	11XXXXXX			Write enable must precede all programming modes.
ERASE	1	11	$A_8 – A_0$	$A_7 – A_0$			Erases memory location $A_n – A_0$.
WRITE	1	01	$A_8 – A_0$	$A_7 – A_0$	$D_7 – D_0$	$D_{15} – D_0$	Writes memory location $A_n – A_0$.
ERAL	1	00	10XXXXXXX	10XXXXXX			Erases all memory locations. Valid only at V_{CC} = 4.5V to 5.5V.
WRAL	1	00	01XXXXXXX	01XXXXXX	$D_7 – D_0$	$D_{15} – D_0$	Writes all memory locations. Valid only at V_{CC} = 5.0V ±10% and Disable Register cleared.
EWDS	1	00	00XXXXXXX	00XXXXXX			Disables all programming instructions.

Note: The X's in the address field represent don't care values and must be clocked.

4. Functional Description

The AT93C56A/66A is accessed via a simple and versatile three-wire serial communication interface. Device operation is controlled by seven instructions issued by the host processor. **A valid instruction starts with a rising edge of CS** and consists of a Start Bit (logic “1”) followed by the appropriate Op Code and the desired memory address location.

READ (READ): The Read (READ) instruction contains the address code for the memory location to be read. After the instruction and address are decoded, data from the selected memory location is available at the serial output pin DO. Output data changes are synchronized with the rising edges of serial clock SK. It should be noted that a dummy bit (logic “0”) precedes the 8- or 16-bit data output string. The AT93C56A/66A supports sequential read operations. The device will automatically increment the internal address pointer and clock out the next memory location as long as Chip Select (CS) is held high. In this case, the dummy bit (logic “0”) will not be clocked out between memory locations, thus allowing for a continuous stream of data to be read.

ERASE/WRITE (EWEN): To assure data integrity, the part automatically goes into the Erase/Write Disable (EWDS) state when power is first applied. An Erase/Write Enable (EWEN) instruction must be executed first before any programming instructions can be carried out. Please note that once in the EWEN state, programming remains enabled until an EWDS instruction is executed or V_{CC} power is removed from the part.

ERASE (ERASE): The Erase instruction programs all bits in the specified memory location to the logical “1” state. The self-timed erase cycle starts once the ERASE instruction and address are decoded. The DO pin outputs the Ready/Busy status of the part if CS is brought high after being kept low for a minimum of 250 ns (t_{CS}). A logic “1” at pin DO indicates that the selected memory location has been erased, and the part is ready for another instruction.

WRITE (WRITE): The Write (WRITE) instruction contains the 8 or 16 bits of data to be written into the specified memory location. The self-timed programming cycle t_{WP} starts after the last bit of data is received at serial data input pin DI. The DO pin outputs the Ready/Busy status of the part if CS is brought high after being kept low for a minimum of 250 ns (t_{CS}). A logic “0” at DO indicates that programming is still in progress. A logic “1” indicates that the memory location at the specified address has been written with the data pattern contained in the instruction and the part is ready for further instructions. **A READY/BUSY status cannot be obtained if the CS is brought high after the end of the self-timed programming cycle t_{WP}.**

ERASE ALL (ERAL): The Erase All (ERAL) instruction programs every bit in the memory array to the logic “1” state and is primarily used for testing purposes. The DO pin outputs the Ready/Busy status of the part if CS is brought high after being kept low for a minimum of 250 ns (t_{CS}). The ERAL instruction is valid only at V_{CC} = 5.0V ± 10%.

WRITE ALL (WRAL): The Write All (WRAL) instruction programs all memory locations with the data patterns specified in the instruction. The DO pin outputs the Ready/Busy status of the part if CS is brought high after being kept low for a minimum of 250 ns (t_{CS}). The WRAL instruction is valid only at V_{CC} = 5.0V ± 10%.

ERASE/WRITE DISABLE (EWDS): To protect against accidental data disturb, the Erase/Write Disable (EWDS) instruction disables all programming modes and should be executed after all programming operations. The operation of the READ instruction is independent of both the EWEN and EWDS instructions and can be executed at any time.

5. Timing Diagrams

Figure 5-1. Synchronous Data Timing

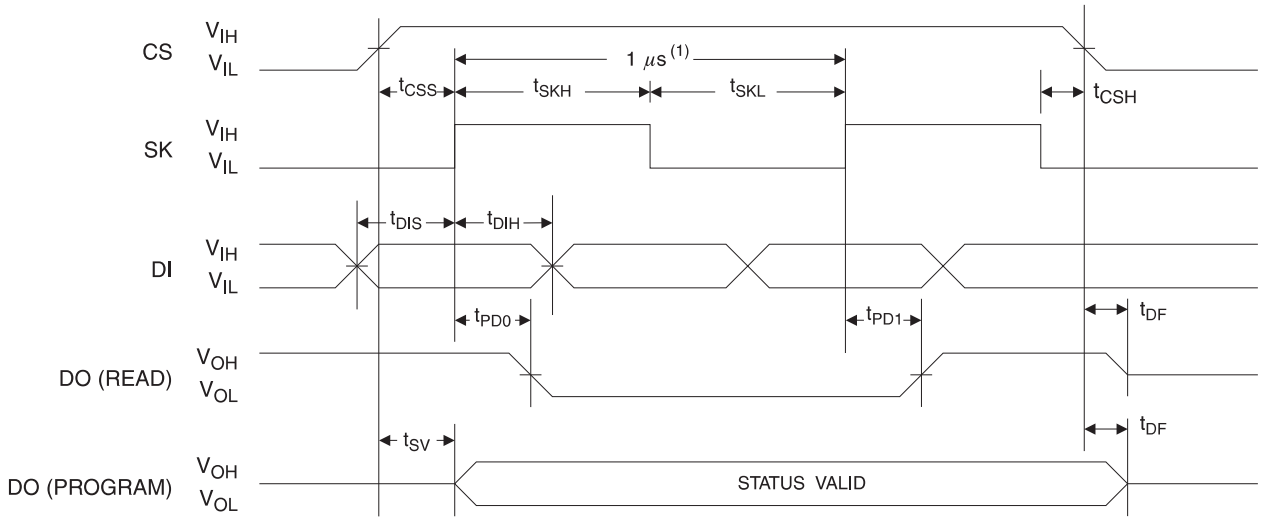

Note: 1. This is the minimum SK period.

Table 5-1. Organization Key for Timing Diagrams

	AT93C56A (2K)		AT93C66A (4K)	
I/O	**x 8**	**x 16**	**x 8**	**x 16**
A_N	A_8 (1)	A_7 (2)	A_8	A_7
D_N	D_7	D_{15}	D_7	D_{15}

Notes: 1. A_8 is a DON'T CARE value, but the extra clock is required.
2. A_7 is a DON'T CARE value, but the extra clock is required.

Figure 5-2. READ Timing

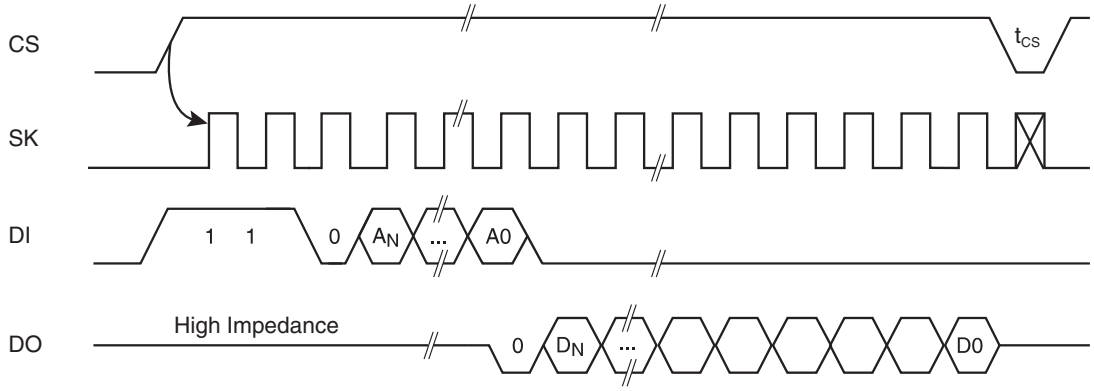

Figure 5-3. EWEN Timing

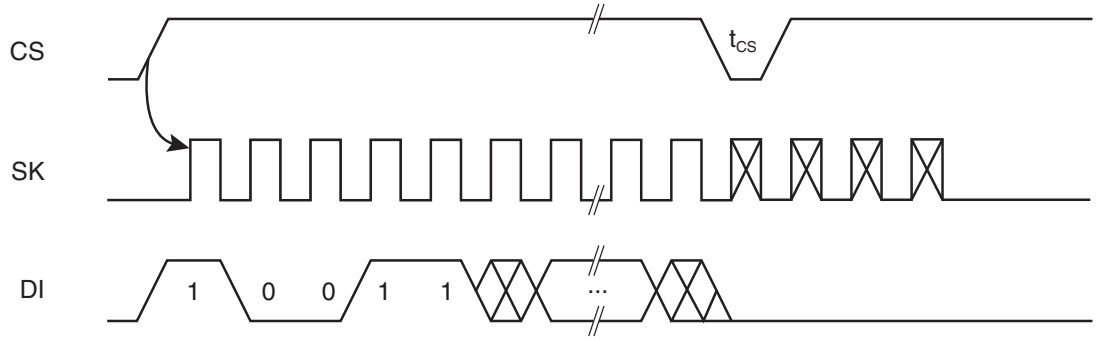

Figure 5-4. EWDS Timing

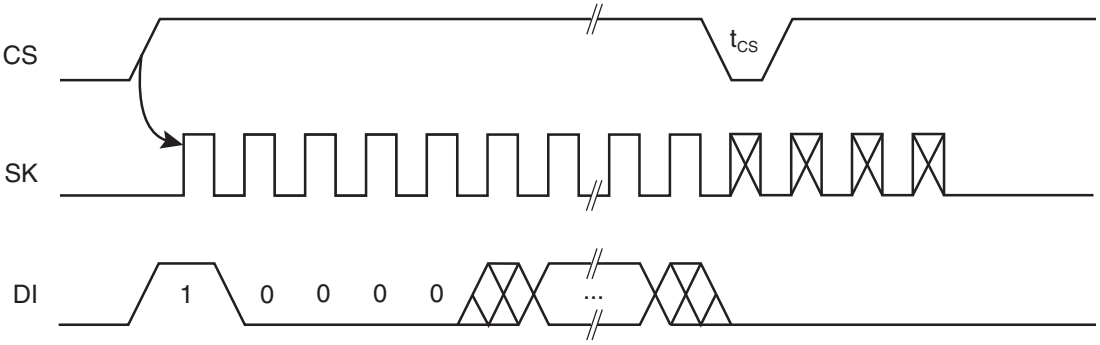

Figure 5-5. WRITE Timing

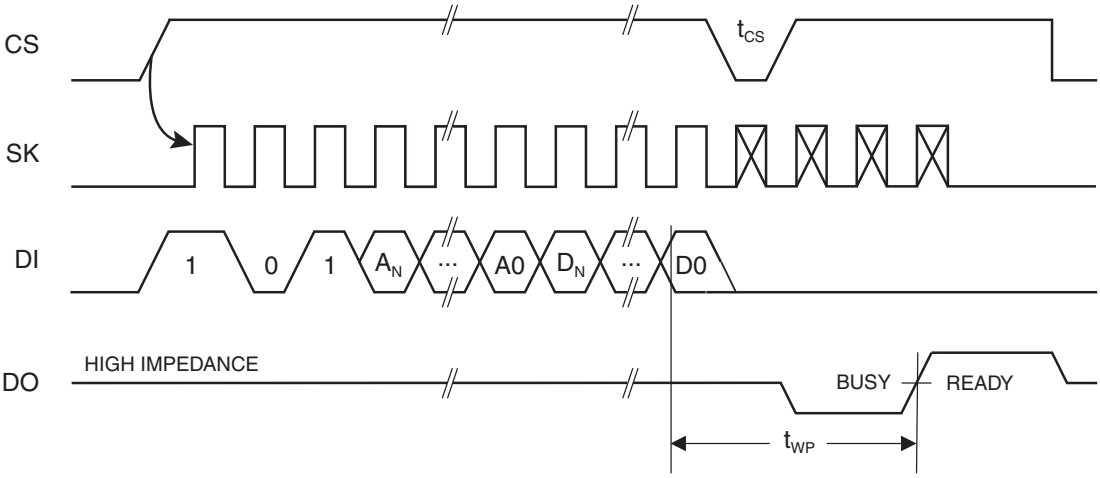

Figure 5-6. WRAL Timing[1]

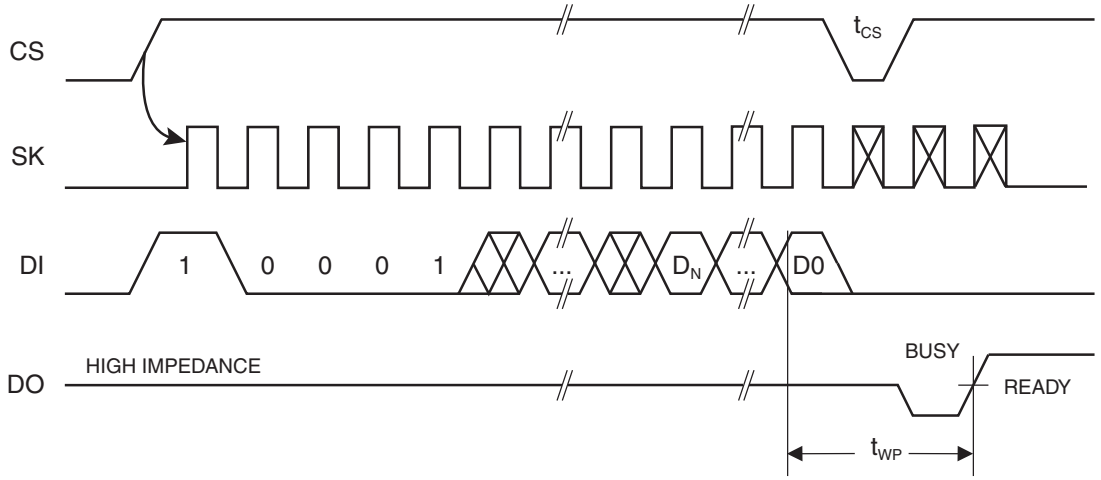

Note: 1. Valid only at V_{CC} = 4.5V to 5.5V.

Figure 5-7. ERASE Timing

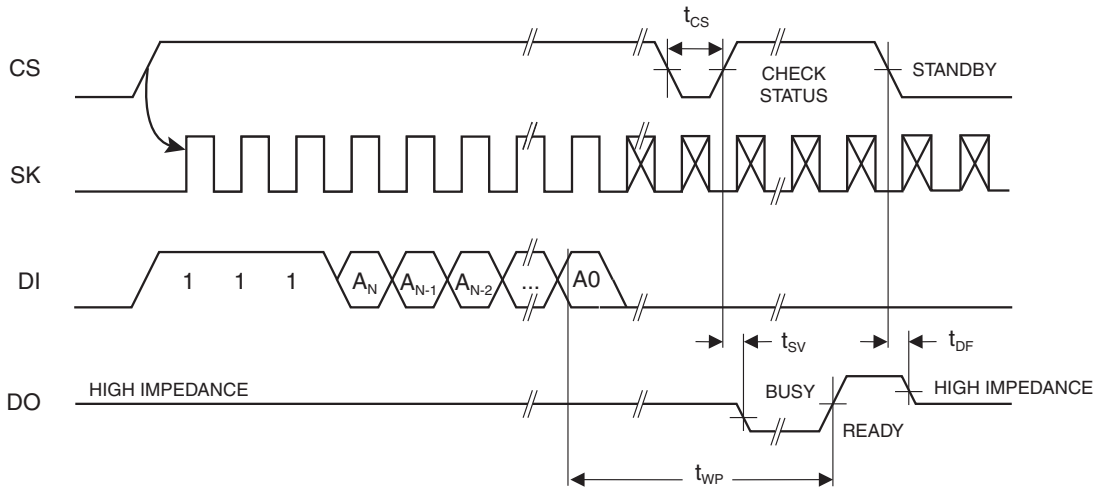

Figure 5-8. ERAL Timing[1]

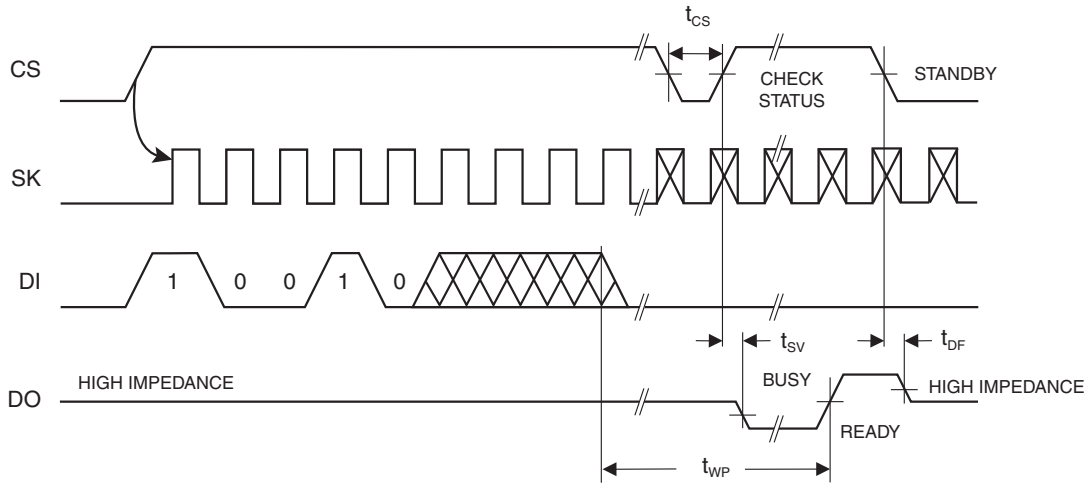

Note: 1. Valid only at V_{CC} = 4.5V to 5.5V.

6. AT93C56A Ordering Information[1]

Ordering Code	Package	Operation Range
AT93C56A-10PU-2.7[2]	8P3	Lead-free/Halogen-free/ Industrial Temperature (–40°C to 85°C)
AT93C56A-10PU-1.8[2]	8P3	
AT93C56A-10SU-2.7[2]	8S1	
AT93C56A-10SU-1.8[2]	8S1	
AT93C56AW-10SU-2.7[2]	8S2	
AT93C56AW-10SU-1.8[2]	8S2	
AT93C56A-10TU-2.7[2]	8A2	
AT93C56A-10TU-1.8[2]	8A2	
AT93C56AU3-10UU-1.8[2]	8U3-1	
AT93C56AD3-10DH-1.8[3]	8D3	
AT93C56AY1-10YU-1.8[2] (Not recommended for new design)	8Y1	
AT93C56AY6-10YH-1.8[3]	8Y6	
AT93C56A-W1.8-11[4]	Die Sales	Industrial Temperature (–40°C to 85°C)

Notes:
1. For 2.7V devices used in the 4.5V to 5.5V range, please refer to performance values in the AC and DC characteristics table.
2. “U” designates Green package + RoHS compliant.
3. “H” designates Green package + RoHS compliant, with NiPdAu Lead Finish.
4. Available in waffle pack and wafer form; order as SL788 for inkless wafer form. Bumped die available upon request. Please contact Serial Marketing.

Package Type	
8P3	8-lead, 0.300" Wide, Plastic Dual Inline Package (PDIP)
8S1	8-lead, 0.150" Wide, Plastic Gull Wing Small Outline (JEDEC SOIC)
8S2	8-lead, 0.200" Wide, Plastic Gull Wing Small Outline (EIAJ SOIC)
8A2	8-lead, 0.170" Wide, Thin Shrink Small Outline Package (TSSOP)
8U3-1	8-ball, die Ball Grid Array Package (dBGA2)
8Y1	8-lead, 4.90 mm x 3.00 mm Body, Dual Footprint, Non-leaded, Miniature Array Package (MAP)
8Y6	8-lead, 2.00 mm x 3.00 mm Body, 0.50 mm Pitch, Ultra Thin Mini-MAP, Dual No Lead package (DFN), (MLP 2x3 mm)
8D3	8-lead, 1.80 mm x 2.20 mm Body, Ultra Lead Frame Land Grid Array (ULA)
Options	
–2.7	Low-voltage (2.7V to 5.5V)
–1.8	Low-voltage (1.8V to 5.5V)

7. AT93C66A Ordering Information[1]

Ordering Code	Package	Operation Range
AT93C66A-10PU-2.7[2]	8P3	Lead-free/Halogen-free/ Industrial Temperature (–40°C to 85°C)
AT93C66A-10PU-1.8[2]	8P3	
AT93C66A-10SU-2.7[2]	8S1	
AT93C66A-10SU-1.8[2]	8S1	
AT93C66AW-10SU-2.7[2]	8S2	
AT93C66AW-10SU-1.8[2]	8S2	
AT93C66A-10TU-2.7[2]	8A2	
AT93C66A-10TU-1.8[2]	8A2	
AT93C66AU3-10UU-1.8[2]	8U3-1	
AT93C66AD3-10DH-1.8[3]	8D3	
AT93C66AY1-10YU-1.8[2] (Not recommended for new design)	8Y1	
AT93C66AY6-10YH-1.8[3]	8Y6	
AT93C66A-W1.8-11[4]	Die Sale	Industrial Temperature (–40°C to 85°C)

Notes:
1. For 2.7V devices used in the 4.5V to 5.5V range, please refer to performance values in the AC and DC characteristics table.
2. “U” designates Green package + RoHS compliant.
3. “H” designates Green package + RoHS compliant, with NiPdAu Lead Finish.
4. Available in waffle pack and wafer form; order as SL788 for inkless wafer form. Bumped die available upon request. Please contact Serial EEPROM Marketing.

Package Type	
8P3	8-lead, 0.300" Wide, Plastic Dual Inline Package (PDIP)
8S1	8-lead, 0.150" Wide, Plastic Gull Wing Small Outline (JEDEC SOIC)
8S2	8-lead, 0.200" Wide, Plastic Gull Wing Small Outline (EIAJ SOIC)
8A2	8-lead, 0.170" Wide, Thin Shrink Small Outline Package (TSSOP)
8U3-1	8-ball, die Ball Grid Array Package (dBGA2)
8Y1	8-lead, 4.90 mm x 3.00 mm Body, Dual Footprint, Non-leaded, Miniature Array Package (MAP)
8Y6	8-lead, 2.00 mm x 3.00 mm Body, 0.50 mm Pitch, Ultra Thin Mini-MAP, Dual No Lead package (DFN), (MLP 2x3 mm)
8D3	8-lead, 1.80 mm x 2.20 mm Body, Ultra Lead Frame Land Grid Array (ULA)
Options	
–2.7	Low-voltage (2.7V to 5.5V)
–1.8	Low-voltage (1.8V to 5.5V)

8. Packaging Information

8.1 8P3 – PDIP

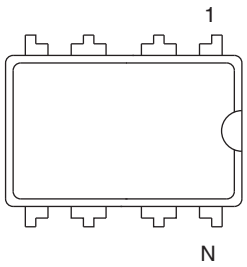

Top View

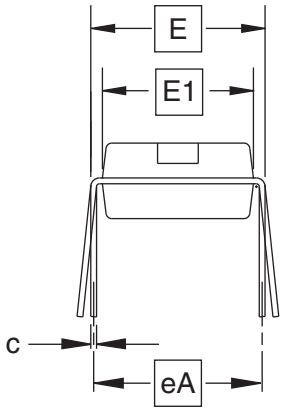

End View

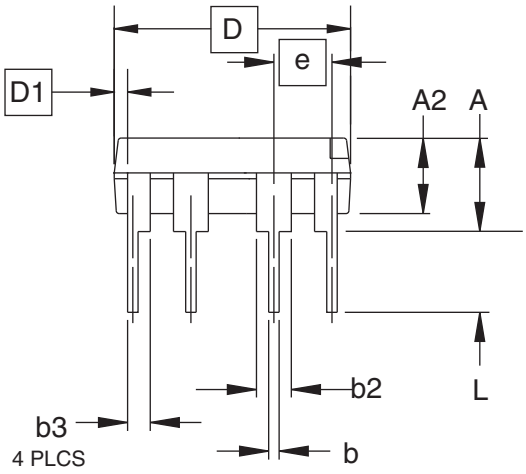

Side View

COMMON DIMENSIONS
(Unit of Measure = inches)

SYMBOL	MIN	NOM	MAX	NOTE
A			0.210	2
A2	0.115	0.130	0.195	
b	0.014	0.018	0.022	5
b2	0.045	0.060	0.070	6
b3	0.030	0.039	0.045	6
c	0.008	0.010	0.014	
D	0.355	0.365	0.400	3
D1	0.005			3
E	0.300	0.310	0.325	4
E1	0.240	0.250	0.280	3
e	0.100 BSC			
eA	0.300 BSC			4
L	0.115	0.130	0.150	2

Notes:
1. This drawing is for general information only; refer to JEDEC Drawing MS-001, Variation BA for additional information.
2. Dimensions A and L are measured with the package seated in JEDEC seating plane Gauge GS-3.
3. D, D1 and E1 dimensions do not include mold Flash or protrusions. Mold Flash or protrusions shall not exceed 0.010 inch.
4. E and eA measured with the leads constrained to be perpendicular to datum.
5. Pointed or rounded lead tips are preferred to ease insertion.
6. b2 and b3 maximum dimensions do not include Dambar protrusions. Dambar protrusions shall not exceed 0.010 (0.25 mm).

01/09/02

	TITLE	DRAWING NO.	REV.
2325 Orchard Parkway San Jose, CA 95131	**8P3**, 8-lead, 0.300" Wide Body, Plastic Dual In-line Package (PDIP)	8P3	B

8.2 8S1 – JEDEC SOIC

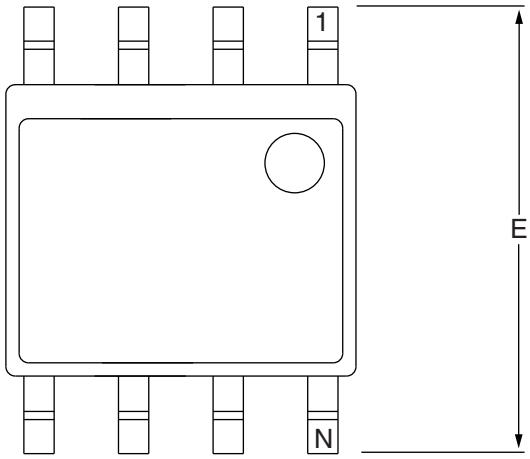

Top View

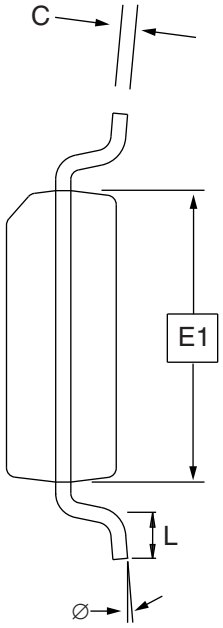

End View

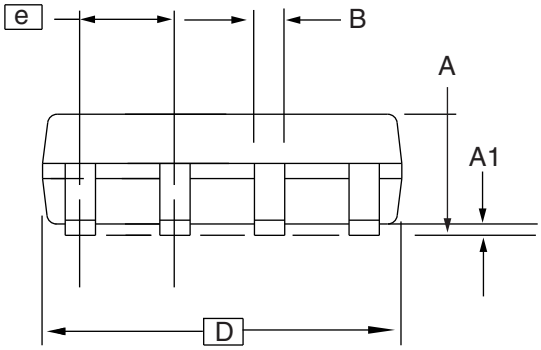

Side View

COMMON DIMENSIONS
(Unit of Measure = mm)

SYMBOL	MIN	NOM	MAX	NOTE
A	1.35	–	1.75	
A1	0.10	–	0.25	
b	0.31	–	0.51	
C	0.17	–	0.25	
D	4.80	–	5.00	
E1	3.81	–	3.99	
E	5.79	–	6.20	
e	1.27 BSC			
L	0.40	–	1.27	
∅	0˚	–	8˚	

Note: These drawings are for general information only. Refer to JEDEC Drawing MS-012, Variation AA for proper dimensions, tolerances, datums, etc.

10/7/03

1150 E. Cheyenne Mtn. Blvd. Colorado Springs, CO 80906	**TITLE** **8S1**, 8-lead (0.150" Wide Body), Plastic Gull Wing Small Outline (JEDEC SOIC)	**DRAWING NO.** 8S1	**REV.** B

8.3 8S2 – EIAJ SOIC

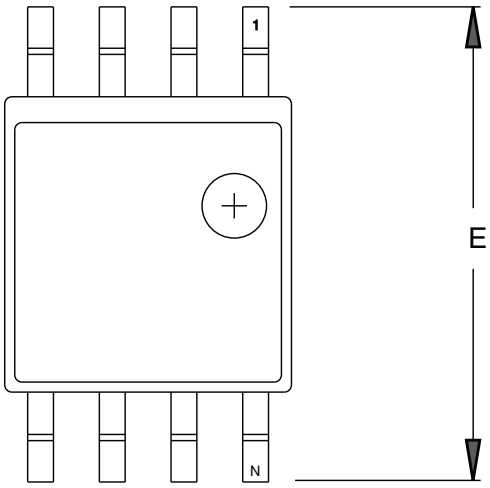

TOP VIEW

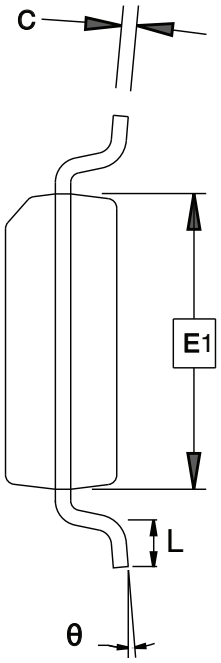

END VIEW

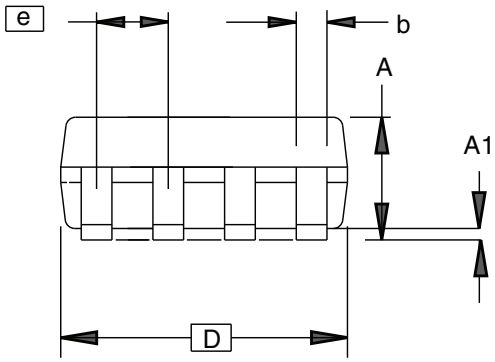

SIDE VIEW

COMMON DIMENSIONS
(Unit of Measure = mm)

SYMBOL	MIN	NOM	MAX	NOTE
A	1.70		2.16	
A1	0.05		0.25	
b	0.35		0.48	5
C	0.15		0.35	5
D	5.13		5.35	
E1	5.18		5.40	2, 3
E	7.70		8.26	
L	0.51		0.85	
θ	0°		8°	
e	1.27 BSC			4

Notes:
1. This drawing is for general information only; refer to EIAJ Drawing EDR-7320 for additional information.
2. Mismatch of the upper and lower dies and resin burrs aren't included.
3. It is recommended that upper and lower cavities be equal. If they are different, the larger dimension shall be regarded.
4. Determines the true geometric position.
5. Values b,C apply to plated terminal. The standard thickness of the plating layer shall measure between 0.007 to .021 mm.

04/07/06

2325 Orchard Parkway San Jose, CA 95131	**TITLE** **8S2,** 8-lead, 0.209" Body, Plastic Small Outline Package (EIAJ)	**DRAWING NO.** 8S2	**REV.** D

8.4 8Y6 – MiniMap (MLP 2x3)

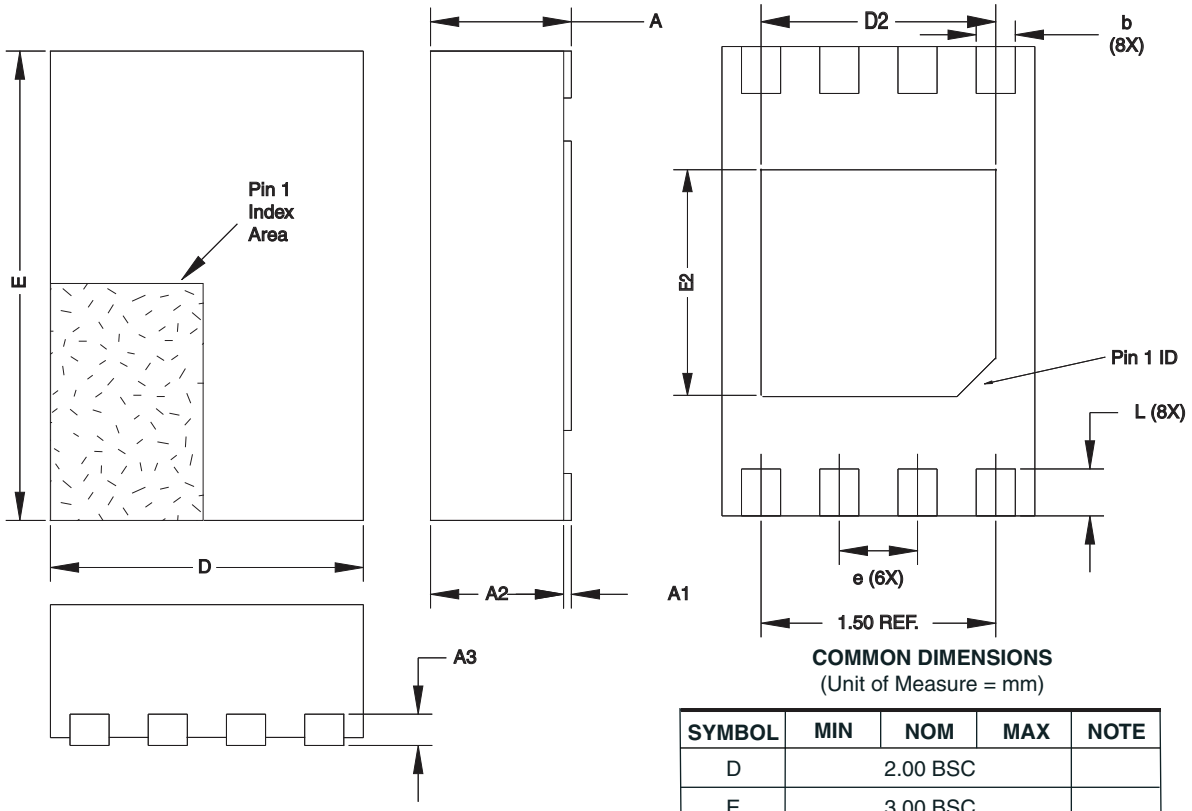

COMMON DIMENSIONS
(Unit of Measure = mm)

SYMBOL	MIN	NOM	MAX	NOTE
D		2.00 BSC		
E		3.00 BSC		
D2	1.40	1.50	1.60	
E2	-	-	1.40	
A	-	-	0.60	
A1	0.0	0.02	0.05	
A2	-	-	0.55	
A3		0.20 REF		
L	0.20	0.30	0.40	
e		0.50 BSC		
b	0.20	0.25	0.30	2

Notes:
1. This drawing is for general information only. Refer to JEDEC Drawing MO-229, for proper dimensions, tolerances, datums, etc.
2. Dimension b applies to metallized terminal and is measured between 0.15 mm and 0.30 mm from the terminal tip. If the terminal has the optional radius on the other end of the terminal, the dimension should not be measured in that radius area.
3. Soldering the large thermal pad is optional, but not recommended. No electrical connection is accomplished to the device through this pad, so if soldered it should be tied to ground

11/21/08

	TITLE	GPC	DRAWING NO.	REV.
Package Drawing Contact: packagedrawings@atmel.com	**8Y6, 8-lead** 2.0x3.0 mm Body, 0.50 mm Pitch, UltraThin Mini-MAP, Dual No Lead Package (Sawn)(UDFN)	YNZ	8Y6	E

8.5 8Y1 – Map

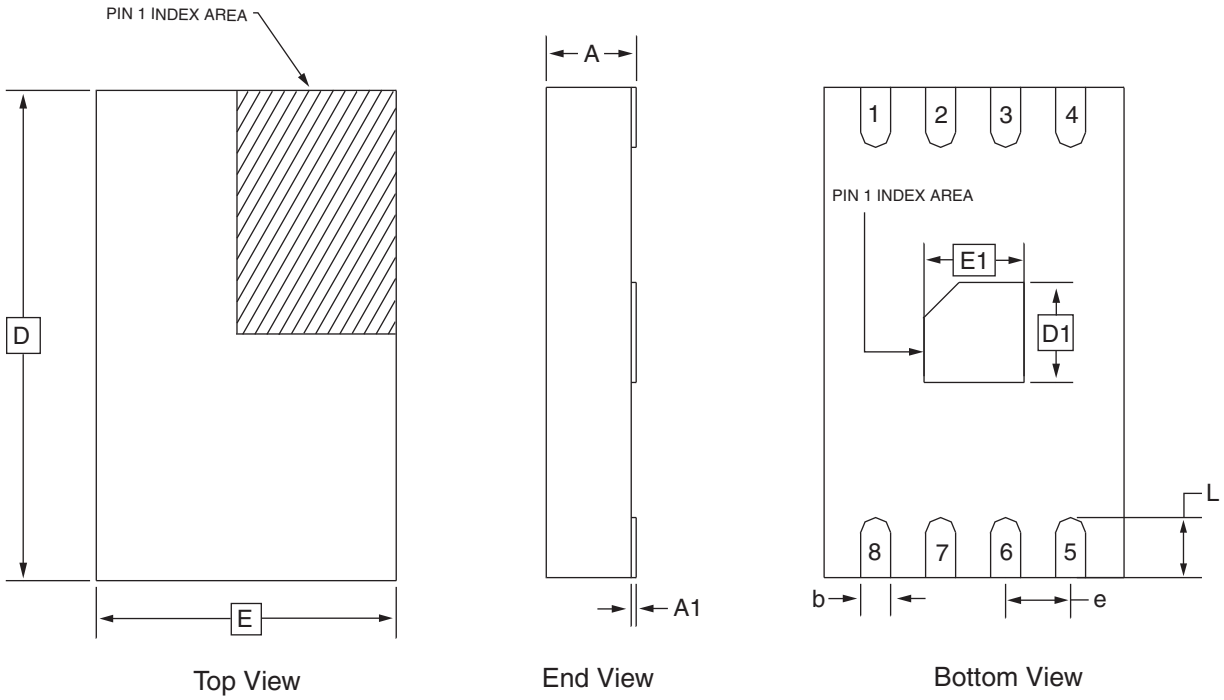

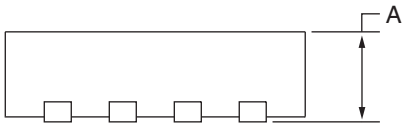

Side View

COMMON DIMENSIONS
(Unit of Measure = mm)

SYMBOL	MIN	NOM	MAX	NOTE
A	–	–	0.90	
A1	0.00	–	0.05	
D	4.70	4.90	5.10	
E	2.80	3.00	3.20	
D1	0.85	1.00	1.15	
E1	0.85	1.00	1.15	
b	0.25	0.30	0.35	
e	0.65 TYP			
L	0.50	0.60	0.70	

2/28/03

2325 Orchard Parkway San Jose, CA 95131	**TITLE** **8Y1,** 8-lead (4.90 x 3.00 mm Body) MSOP Array Package (MAP) Y1	**DRAWING NO.** 8Y1	**REV.** C

8.6 8A2 – TSSOP

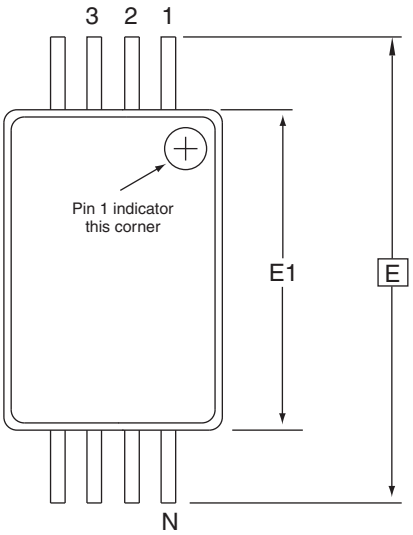

Top View

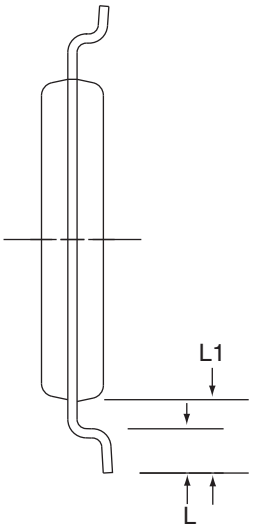

End View

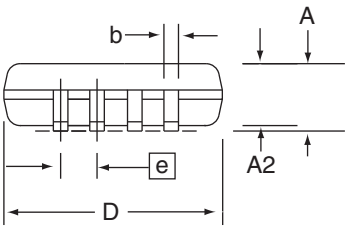

Side View

COMMON DIMENSIONS
(Unit of Measure = mm)

SYMBOL	MIN	NOM	MAX	NOTE
D	2.90	3.00	3.10	2, 5
E		6.40 BSC		
E1	4.30	4.40	4.50	3, 5
A	–	–	1.20	
A2	0.80	1.00	1.05	
b	0.19	–	0.30	4
e		0.65 BSC		
L	0.45	0.60	0.75	
L1		1.00 REF		

Notes:
1. This drawing is for general information only. Refer to JEDEC Drawing MO-153, Variation AA, for proper dimensions, tolerances, datums, etc.
2. Dimension D does not include mold Flash, protrusions or gate burrs. Mold Flash, protrusions and gate burrs shall not exceed 0.15 mm (0.006 in) per side.
3. Dimension E1 does not include inter-lead Flash or protrusions. Inter-lead Flash and protrusions shall not exceed 0.25 mm (0.010 in) per side.
4. Dimension b does not include Dambar protrusion. Allowable Dambar protrusion shall be 0.08 mm total in excess of the b dimension at maximum material condition. Dambar cannot be located on the lower radius of the foot. Minimum space between protrusion and adjacent lead is 0.07 mm.
5. Dimension D and E1 to be determined at Datum Plane H.

5/30/02

2325 Orchard Parkway San Jose, CA 95131	**TITLE** **8A2**, 8-lead, 4.4 mm Body, Plastic Thin Shrink Small Outline Package (TSSOP)	**DRAWING NO.** 8A2	**REV.** B

8.7 8U3-1 – dBGA2

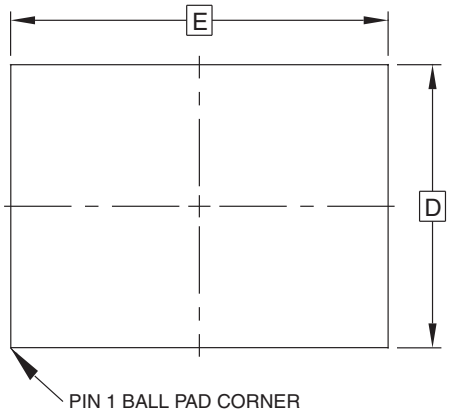

Top View

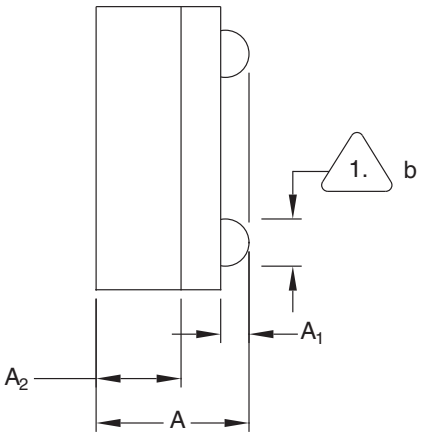

Side View

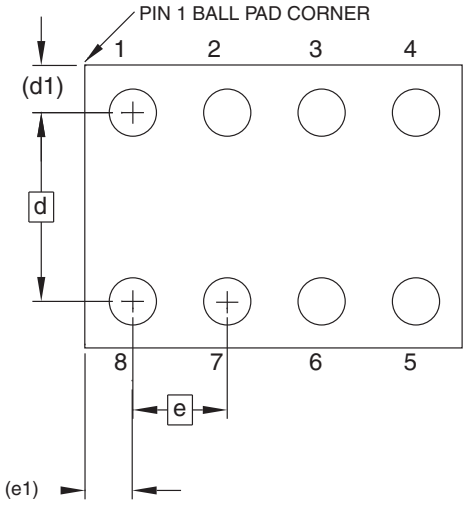

Bottom View
8 Solder Balls

1. This drawing is for general information only.
2. Dimension 'b' is measured at maximum solder ball diameter

COMMON DIMENSIONS
(Unit of Measure = mm)

SYMBOL	MIN	NOM	MAX	NOTE
A	0.713	0.79	0.85	
A1	0.09	0.14	0.19	
A2	0.40	0.45	0.50	
b	0.20	0.25	0.30	2
D	1.50 BSC			
E	2.00 BSC			
e	0.50 BSC			
e1	0.25 REF			
d	1.00 BSC			
d1	0.25 REF			

5/3/05

1150E Cheyenne Mt. Blvd Colorado Springs, CO 80906	TITLE 8U3-1, 8-ball, 1.50 x 2.00 mm Body, 0.50 mm pitch, Small Die Ball Grid Array Package (dBGA2)	DRAWING NO. PO8U3-1	REV. b

8.8 8D3 - ULA

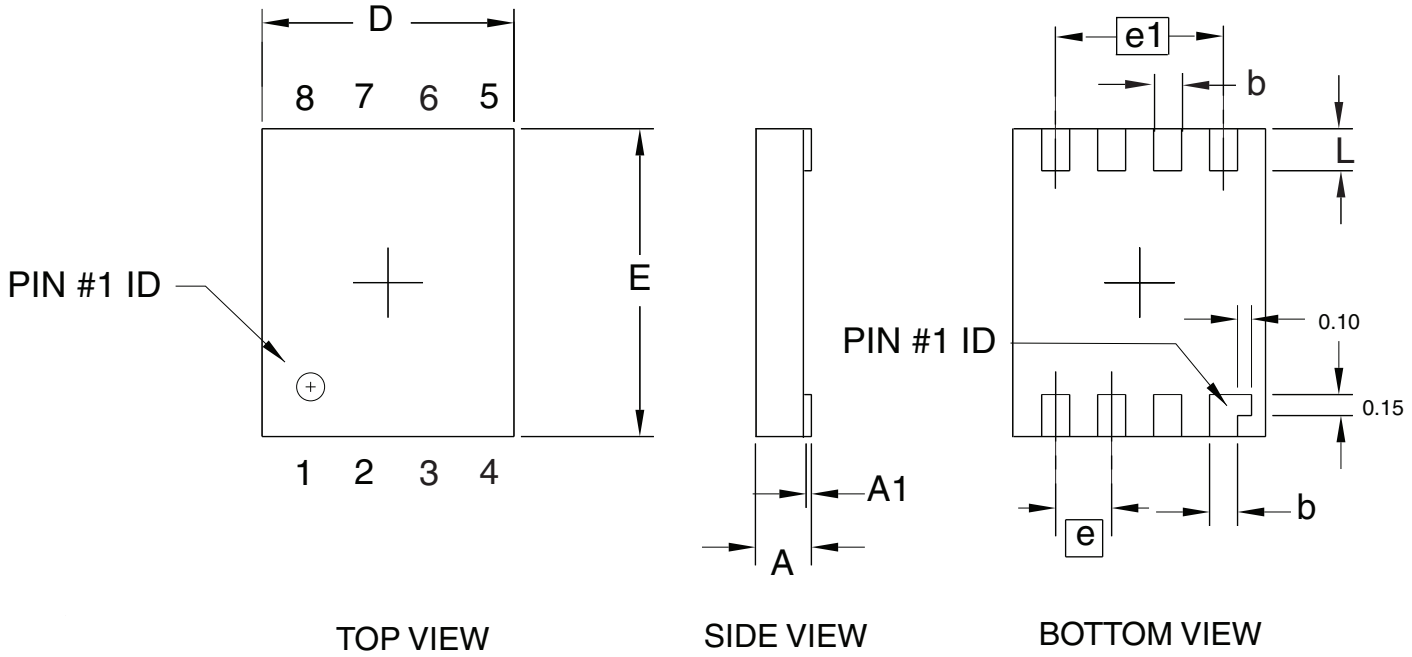

COMMON DIMENSIONS
(Unit of Measure = mm)

SYMBOL	MIN	NOM	MAX	NOTE
A	–	–	0.40	
A1	0.00	–	0.05	
D	1.70	1.80	1.90	
E	2.10	2.20	2.30	
b	0.15	0.20	0.25	
e		0.40 TYP		
e1		1.20 REF		
L	0.25	0.30	0.35	

11/15/05

	TITLE	DRAWING NO.	REV.
1150 E. Cheyenne Mtn. Blvd. Colorado Springs, CO 80906	**8D3**, 8-lead (1.80 x 2.20 mm Body) Ultra Leadframe Land Grid Array (ULLGA) D3	8D3	0

9. Revision History

Revision No.	Date	Comments
3378O	07/2012	Not recommended for new design. Use AT93C56B/66B.
3378O	11/2009	Added 8S2 package drawing
3378N	1/2009	Updated 8Y6 package drawing
3378M	7/2008	Updated Ordering Codes
3378L	11/2007	Updated to new template Added ULA package offering
3378K	12/2006	Removed DC/Don't Connect and replaced with NC/No Conenct Adjusted size of Block diagram on pg. 2 Made all diagrams on pages 6-9 consistently the same size Corrected 8U3-1

Headquarters

Atmel Corporation
2325 Orchard Parkway
San Jose, CA 95131
USA
Tel: 1(408) 441-0311
Fax: 1(408) 487-2600

International

Atmel Asia
Room 1219
Chinachem Golden Plaza
77 Mody Road Tsimshatsui
East Kowloon
Hong Kong
Tel: (852) 2721-9778
Fax: (852) 2722-1369

Atmel Europe
Le Krebs
8, Rue Jean-Pierre Timbaud
BP 309
78054 Saint-Quentin-en-
Yvelines Cedex
France
Tel: (33) 1-30-60-70-00
Fax: (33) 1-30-60-71-11

Atmel Japan
9F, Tonetsu Shinkawa Bldg.
1-24-8 Shinkawa
Chuo-ku, Tokyo 104-0033
Japan
Tel: (81) 3-3523-3551
Fax: (81) 3-3523-7581

Product Contact

Web Site
www.atmel.com

Technical Support
s_eeprom@atmel.com

Sales Contact
www.atmel.com/contacts

Literature Requests
www.atmel.com/literature

Disclaimer: The information in this document is provided in connection with Atmel products. No license, express or implied, by estoppel or otherwise, to any intellectual property right is granted by this document or in connection with the sale of Atmel products. **EXCEPT AS SET FORTH IN ATMEL'S TERMS AND CONDITIONS OF SALE LOCATED ON ATMEL'S WEB SITE, ATMEL ASSUMES NO LIABILITY WHATSOEVER AND DISCLAIMS ANY EXPRESS, IMPLIED OR STATUTORY WARRANTY RELATING TO ITS PRODUCTS INCLUDING, BUT NOT LIMITED TO, THE IMPLIED WARRANTY OF MERCHANTABILITY, FITNESS FOR A PARTICULAR PURPOSE, OR NON-INFRINGEMENT. IN NO EVENT SHALL ATMEL BE LIABLE FOR ANY DIRECT, INDIRECT, CONSEQUENTIAL, PUNITIVE, SPECIAL OR INCIDENTAL DAMAGES (INCLUDING, WITHOUT LIMITATION, DAMAGES FOR LOSS OF PROFITS, BUSINESS INTERRUPTION, OR LOSS OF INFORMATION) ARISING OUT OF THE USE OR INABILITY TO USE THIS DOCUMENT, EVEN IF ATMEL HAS BEEN ADVISED OF THE POSSIBILITY OF SUCH DAMAGES.** Atmel makes no representations or warranties with respect to the accuracy or completeness of the contents of this document and reserves the right to make changes to specifications and product descriptions at any time without notice. Atmel does not make any commitment to update the information contained herein. Unless specifically provided otherwise, Atmel products are not suitable for, and shall not be used in, automotive applications. Atmel's products are not intended, authorized, or warranted for use as components in applications intended to support or sustain life.

© 2009 Atmel Corporation. **All rights reserved.** Atmel®, Atmel logo and combinations thereof, and others, are registered trademarks or trademarks of Atmel Corporation or its subsidiaries. Other terms and product names may be trademarks of others.

3378O–SEEPR–11/09

ООО «ЛайфЭлектроникс» “LifeElectronics” LLC

ИНН 7805602321 КПП 780501001 Р/С 40702810122510004610 ФАКБ "АБСОЛЮТ БАНК" (ЗАО) в г.Санкт-Петербурге К/С 30101810900000000703 БИК 044030703

Компания «Life Electronics» занимается поставками электронных компонентов импортного и отечественного производства от производителей и со складов крупных дистрибьюторов Европы, Америки и Азии.

С конца 2013 года компания активно расширяет линейку поставок компонентов по направлению коаксиальный кабель, кварцевые генераторы и конденсаторы (керамические, пленочные, электролитические), за счёт заключения дистрибьюторских договоров

Мы предлагаем:

- *Конкурентоспособные цены и скидки постоянным клиентам.*
- *Специальные условия для постоянных клиентов.*
- *Подбор аналогов.*
- *Поставку компонентов в любых объемах, удовлетворяющих вашим потребностям.*

- *Приемлемые сроки поставки, возможна ускоренная поставка.*
- *Доставку товара в любую точку России и стран СНГ.*
- *Комплексную поставку.*
- *Работу по проектам и поставку образцов.*
- *Формирование склада под заказчика.*

- *Сертификаты соответствия на поставляемую продукцию (по желанию клиента).*
- *Тестирование поставляемой продукции.*
- *Поставку компонентов, требующих военную и космическую приемку.*
- *Входной контроль качества.*
- *Наличие сертификата ISO.*

В составе нашей компании организован Конструкторский отдел, призванный помогать разработчикам, и инженерам.

Конструкторский отдел помогает осуществить:

- *Регистрацию проекта у производителя компонентов.*
- *Техническую поддержку проекта.*
- *Защиту от снятия компонента с производства.*
- *Оценку стоимости проекта по компонентам.*
- *Изготовление тестовой платы монтаж и пусконаладочные работы.*

Тел: +7 (812) 336 43 04 (многоканальный)
Email: org@lifeelectronics.ru

www.lifeelectronics.ru