TS5N214
2-BIT 1-OF-4 FET MULTIPLEXER/DEMULTIPLEXER HIGH-BANDWIDTH BUS SWITCH

SCDS206–AUGUST 2005

FEATURES

- **Low and Flat ON-State Resistance (r_{on}) Characteristics Over Operating Range (r_{on} = 3 Ω Typ)**
- **0- to 10-V Switching on Data I/O Ports**
- **Bidirectional Data Flow With Near-Zero Propagation Delay**
- **Low Input/Output Capacitance Minimizes Loading and Signal Distortion ($C_{io(OFF)}$ = 20 pF Max, B Port)**
- **V_{CC} Operating Range From 4.75 V to 5.25 V**
- **Latch-Up Performance Exceeds 100 mA Per JESD 78, Class II**
- **ESD Performance Tested Per JESD 22**
  - **2000-V Human-Body Model (A114-B, Class II)**
  - **1000-V Charged-Device Model (C101)**
- **Supports Both Digital and Analog Applications: PCI Interface, Differential Signal Interface, Memory Interleaving, Bus Isolation, Low-Distortion Signal Gating**

DBQ OR PW PACKAGE
(TOP VIEW)

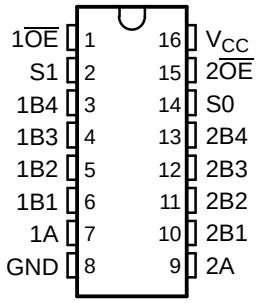

DESCRIPTION/ORDERING INFORMATION

The TS5N214 is a high-bandwidth FET bus switch utilizing a charge pump to elevate the gate voltage of the pass transistor, providing a low and flat ON-state resistance (r_{on}). The low and flat ON-state resistance allows for minimal propagation delay and supports rail-to-rail switching on the data input/output (I/O) ports. The device also features low data I/O capacitance to minimize capacitive loading and signal distorion on the data bus. Specifically designed to support high-bandwidth applications, the TS5N214 provides an optimized interface solution ideally suited for broadband communications, networking, and data-intensive computing systems.

The TS5N214 is a 2-bit 1-of-4 multiplexer/demultiplexer with separate output-enable ($1\overline{OE}$, $2\overline{OE}$) inputs. The select (S0, S1) inputs control the data path of the multiplexer/demultiplexer. When $\overline{OE}$ is low, the multiplexer/demultiplexer is enabled and the A port is connected to the B port, allowing bidirectional data flow between ports. When $\overline{OE}$ is high, the multiplexer/demultiplexer is disabled and a high-impedance state exists between the A and B ports.

This device is fully specified for partial-power-down applications using I_{off}. The I_{off} circuitry prevents damaging current backflow through the device when it is powered down. The device has isolation during power off.

To ensure the high-impedance state during power up or power down, $\overline{OE}$ should be tied to V_{CC} through a pullup resistor; the minimum value of the resistor is determined by the current-sinking capability of the driver.

ORDERING INFORMATION

T_A	PACKAGE(1)		ORDERABLE PART NUMBER	TOP-SIDE MARKING
–40°C to 85°C	SSOP (QSOP) – DBQ	Tape and reel	TS5N214DBQR	YB214
	TSSOP – PW	Tape and reel	TS5N214PWR	YB214

(1) Package drawings, standard packing quantities, thermal data, symbolization, and PCB design guidelines are available at www.ti.com/sc/package.

Please be aware that an important notice concerning availability, standard warranty, and use in critical applications of Texas Instruments semiconductor products and disclaimers thereto appears at the end of this data sheet.

PRODUCTION DATA information is current as of publication date. Products conform to specifications per the terms of the Texas Instruments standard warranty. Production processing does not necessarily include testing of all parameters.

Copyright © 2005, Texas Instruments Incorporated

FUNCTION TABLE (EACH MULTIPLEXER/DEMULTIPLEXER)

INPUTS			INPUT/OUTPUT A	FUNCTION
$\overline{OE}$	S1	S0		
L	L	L	B1	A port = B1 port
L	L	H	B2	A port = B2 port
L	H	L	B3	A port = B3 port
L	H	H	B4	A port = B4 port
H	X	X	Z	Disconnect

LOGIC DIAGRAM (POSITIVE LOGIC)

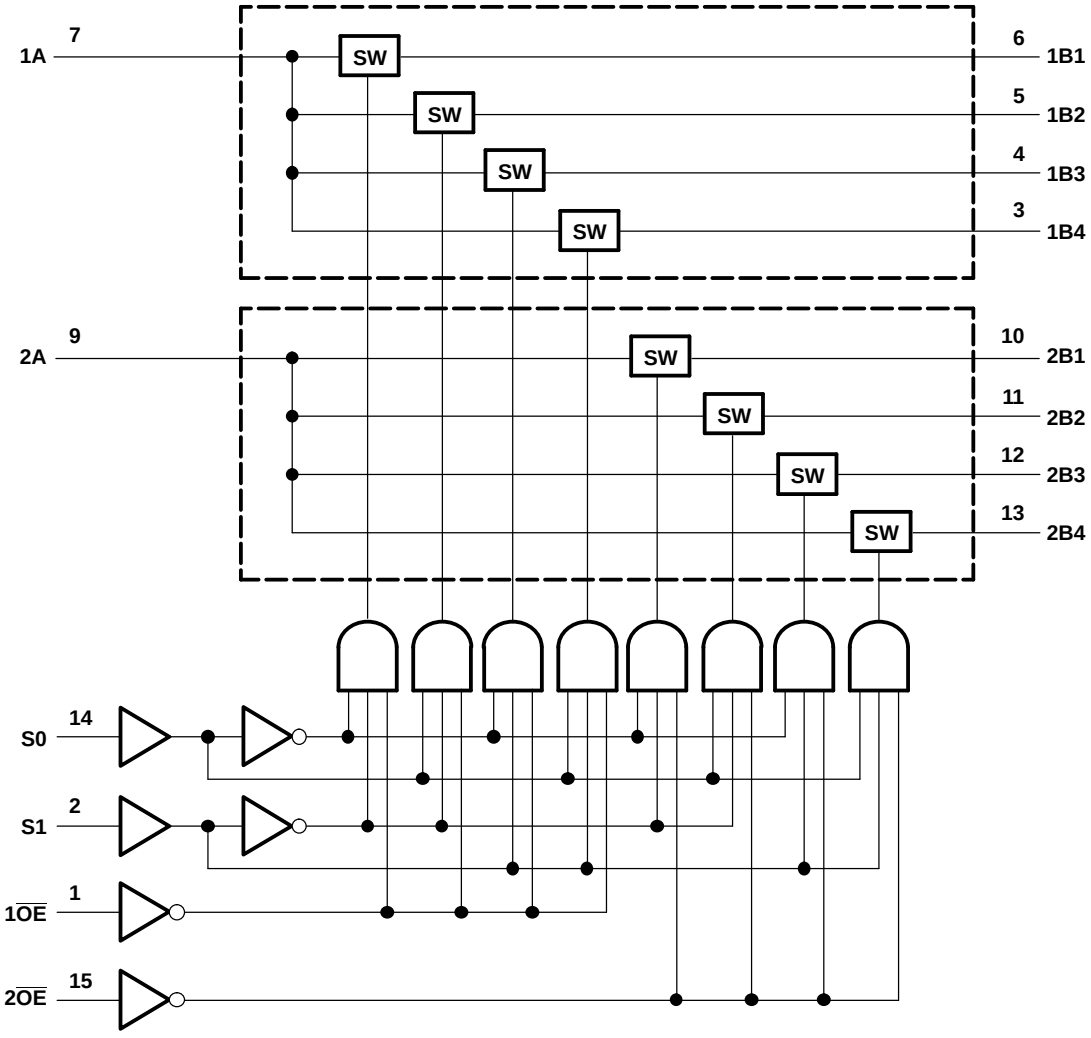

SIMPLIFIED SCHEMATIC, EACH FET SWITCH (SW)

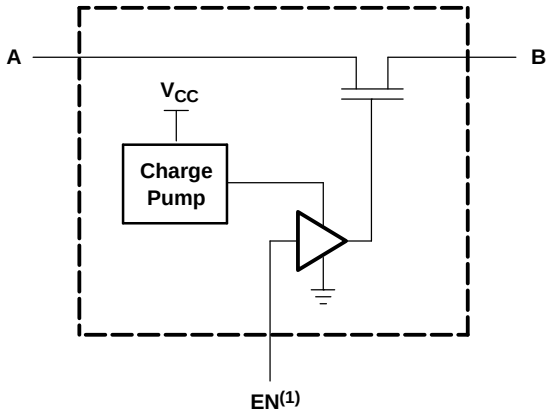

(1) EN is the internal enable signal applied to the switch.

Absolute Maximum Ratings(1)

over operating free-air temperature range (unless otherwise noted)

			MIN	MAX	UNIT
V_{CC}	Supply voltage range		–0.5	7	V
V_{IN}	Control input voltage range(2)(3)		–0.5	7	V
$V_{I/O}$	Switch I/O voltage range(2)(3)(4)		–0.5	11	V
$I_{I/O}$	ON-state switch current(5)			±100	mA
	Continuous current through V_{CC} or GND			±100	mA
θ_{JA}	Package thermal impedance(6)	DBQ package		90	°C/W
		PW package		108	
T_{stg}	Storage temperature range		–65	150	°C

(1) Stresses beyond those listed under "absolute maximum ratings" may cause permanent damage to the device. These are stress ratings only, and functional operation of the device at these or any other conditions beyond those indicated under "recommended operating conditions" is not implied. Exposure to absolute-maximum-rated conditions for extended periods may affect device reliability.
(2) All voltages are with respect to ground, unless otherwise specified.
(3) The input and output voltage ratings may be exceeded if the input and output clamp-current ratings are observed.
(4) V_I and V_O are used to denote specific conditions for $V_{I/O}$.
(5) I_I and I_O are used to denote specific conditions for $I_{I/O}$.
(6) The package thermal impedance is calculated in accordance with JESD 51-7.

Recommended Operating Conditions(1)

		MIN	MAX	UNIT
V_{CC}	Supply voltage	4.75	5.25	V
V_{IH}	High-level control input voltage	2	5.25	V
V_{IL}	Low-level control input voltage	0	0.8	V
$V_{I/O}$	Data input/output voltage	0	10	V
T_A	Operating free-air temperature	–40	85	°C

(1) All unused control inputs of the device must be held at V_{CC} or GND to ensure proper device operation. Refer to the TI application report, *Implications of Slow or Floating CMOS Inputs*, literature number SCBA004.

Electrical Characteristics

over recommended operating free-air temperature range (unless otherwise noted)

PARAMETER		TEST CONDITIONS[1]			MIN	TYP[2]	MAX	UNIT
I_{IN}	Control inputs	V_{CC} = 5.25 V,	V_{IN} = 0 to V_{CC}				10	µA
I_{OZ}[3]		V_{CC} = 5.25 V,	V_O = 0 to 10 V, V_I = 0,	Switch OFF, V_{IN} = V_{CC} or GND			10	µA
		V_{CC} = 0 V,	V_O = Open,	V_I = 0 to 10 V			10	
I_{CC}		V_{CC} = 5.25 V,	$I_{I/O}$ = 0, Switch ON or OFF,	V_{IN} = V_{CC} or GND			10	mA
C_{in}	Control inputs	V_{CC} = 5 V,	V_{IN} = 10 V or 0				10	pF
$C_{io(OFF)}$	A port	V_{CC} = 5 V,	Switch OFF, V_{IN} = V_{CC} or GND,	$V_{I/O}$ = 10 V or 0			60	pF
	B port	V_{CC} = 5 V,	Switch OFF, V_{IN} = V_{CC} or GND,	$V_{I/O}$ = 10 V or 0			20	
$C_{io(ON)}$		V_{CC} = 5 V,	Switch ON, V_{IN} = V_{CC} or GND,	$V_{I/O}$ = 10 V or 0			100	pF
r_{on}[4]		V_{CC} = 4.75 V, TYP at V_{CC} = 5 V	V_I = 0 V,	I_O = 50 mA		3	7.5	Ω
			V_I = 8 V,	I_O = –50 mA			7.5	
			V_I = 10 V,	I_O = –50 mA			12.5	

(1) V_{IN} and I_{IN} refer to control inputs. V_I, V_O, I_I, and I_O refer to data pins.
(2) All typical values are at V_{CC} = 5 V (unless otherwise noted), T_A = 25°C.
(3) For I/O ports, the parameter I_{OZ} includes the I/O leakage current.
(4) Measured by the voltage drop between the A and B terminals at the indicated current through the switch. ON-state resistance is determined by the lower of the voltages of the two (A or B) terminals.

Switching Characteristics

over recommended operating free-air temperature range (unless otherwise noted) (see Figure 3)

PARAMETER	FROM (INPUT)	TO (OUTPUT)	V_{CC} = 5 V ± 0.25 V		UNIT
			MIN	MAX	
t_{pd}[1]	A or B	B or A		3	ns
$t_{pd(s)}$	S	A		200	ns
t_{en}	S	B		200	ns
	$\overline{OE}$	A or B		200	
t_{dis}	S	B		200	ns
	$\overline{OE}$	A or B		200	

(1) The propagation delay is the calculated RC time constant of the typical ON-state resistance of the switch and the specified load capacitance, when driven by an ideal voltage source (zero output impedance).

Dynamic Characteristics

over recommended operating free-air temperature range, V_{CC} = 5 V ± 5% (unless otherwise noted)

PARAMETER	TEST CONDITIONS				MIN	TYP[1]	MAX	UNIT
Bandwidth (BW)[2]	R_L = 50 Ω,	V_I = 0.632 V (P-P),	See Figure 4		25			MHz
OFF isolation (O_{ISO})	R_L = 50 Ω,	V_I = 0.632 V (P-P),	f = 25 MHz,	See Figure 5		–50		dB
Crosstalk (X_{TALK})	R_L = 50 Ω,	V_I = 0.632 V (P-P),	f = 25 MHz,	See Figure 6 and Figure 7		–50		dB

(1) All typical values are at V_{CC} = 5 V (unless otherwise noted), T_A = 25°C
(2) Bandwidth is the frequency where the gain is –3 dB below the DC gain.

TYPICAL PERFORMANCE

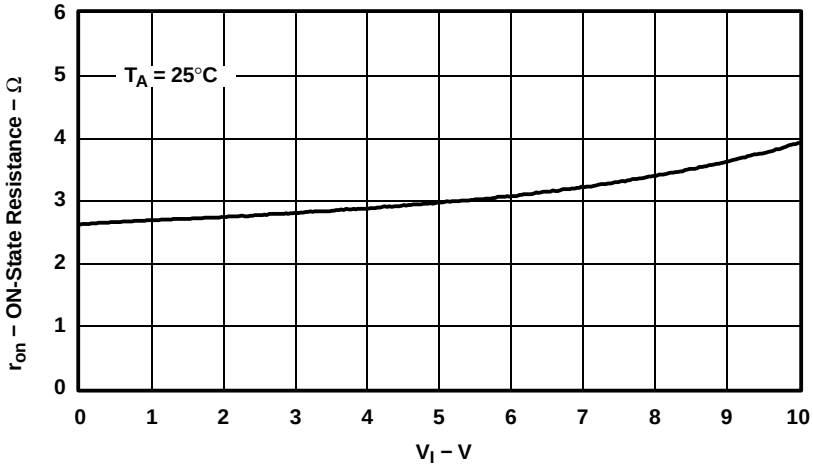

Figure 1. Typical r_{on} vs V_I, V_{CC} - 5 V, and I_O = –50 mA

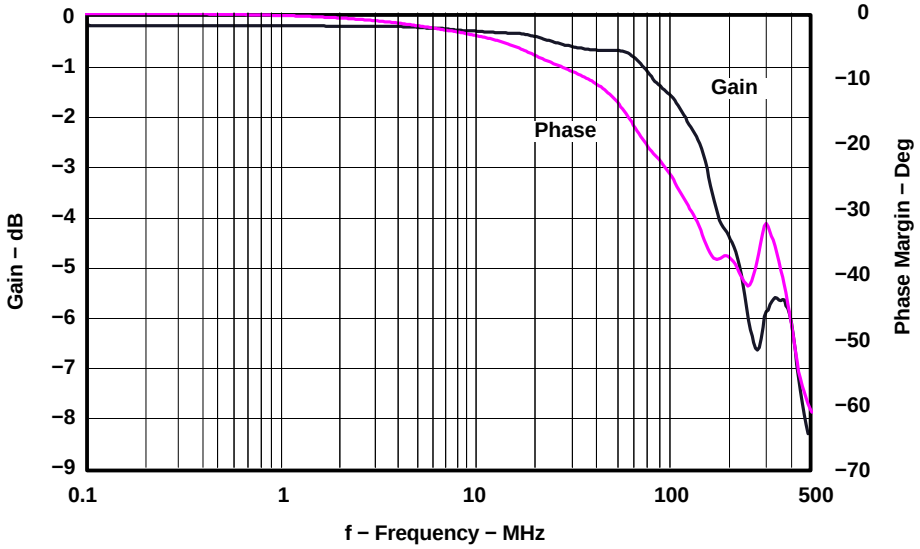

Figure 2. Frequency Response vs Bandwidth

TYPICAL PERFORMANCE (continued)

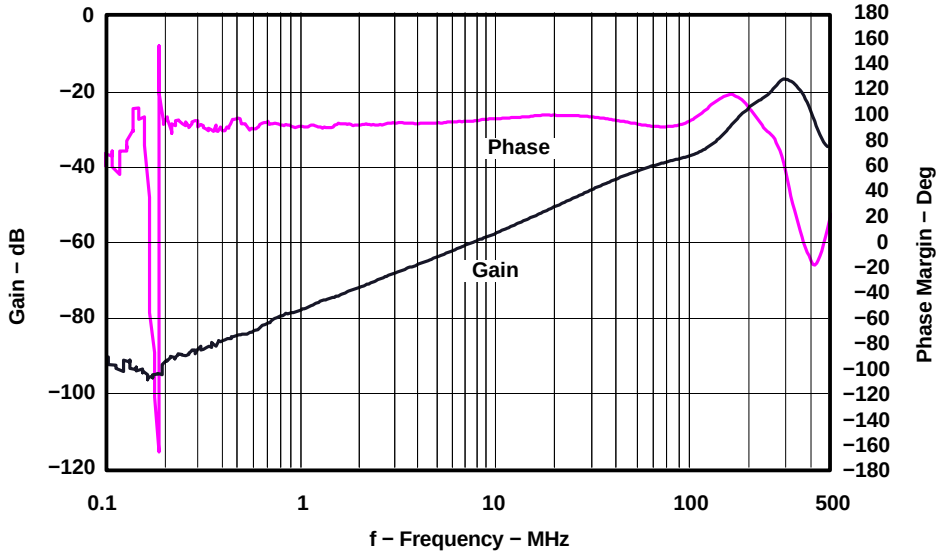

Figure 3. Frequency Response vs OFF Isolation

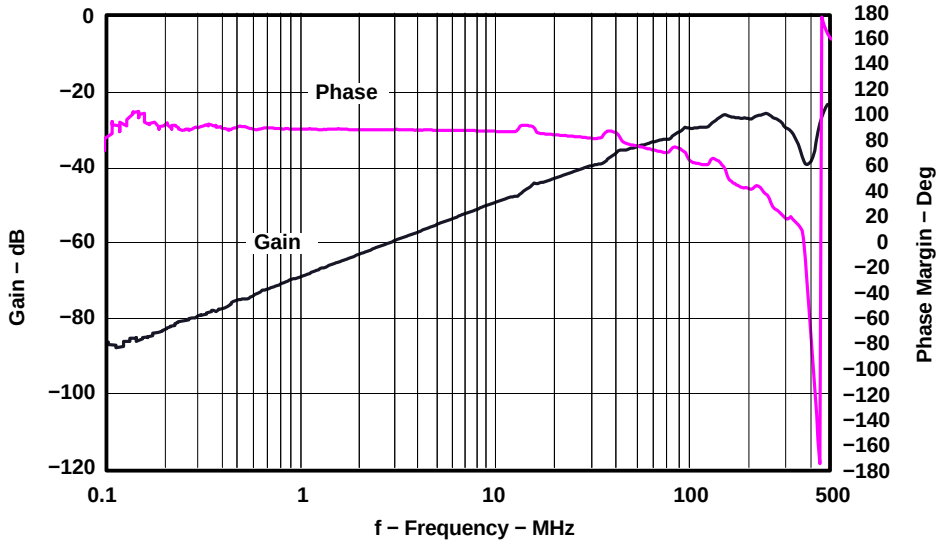

Figure 4. Frequency Response vs Crosstalk

PARAMETER MEASUREMENT INFORMATION

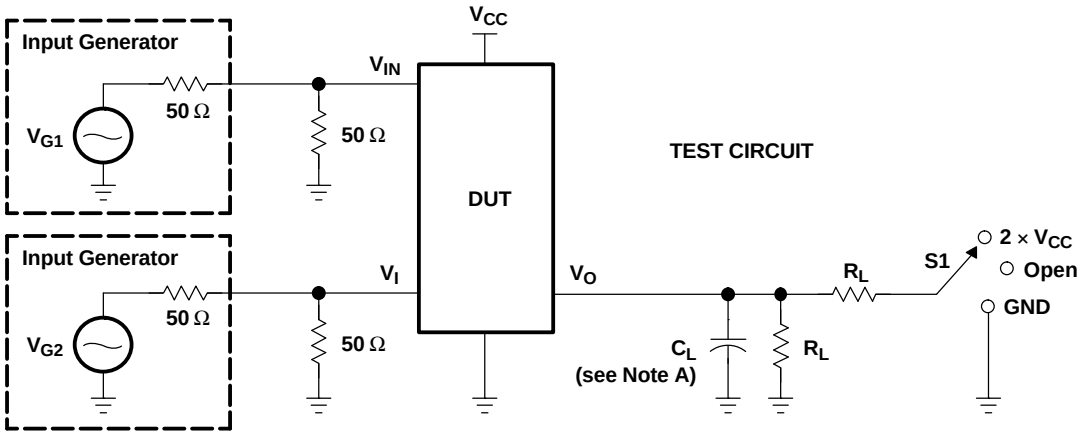

TEST	V_{CC}	S1	R_L	V_I	C_L	V_Δ
$t_{pd(s)}$†	5 V ± 0.25 V	Open	100 Ω	V_{CC}	35 pF	
t_{PLZ}/t_{PZL}	5 V ± 0.25 V	2 × V_{CC}	100 Ω	GND	35 pF	0.3 V
t_{PHZ}/t_{PZH}	5 V ± 0.25 V	GND	100 Ω	V_{CC}	35 pF	0.3 V

† t_{pds} is measured with Demux inputs at opposite voltage levels, i.e. V_{B1} = 5 V, V_{B2} = GND.

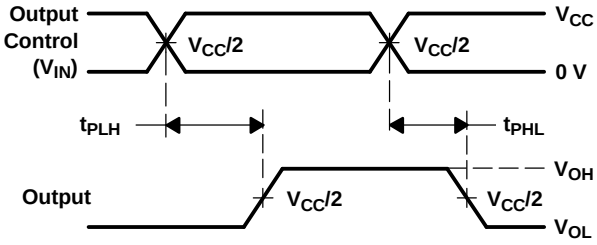

VOLTAGE WAVEFORMS
PROPAGATION DELAY TIMES ($t_{pd(s)}$)

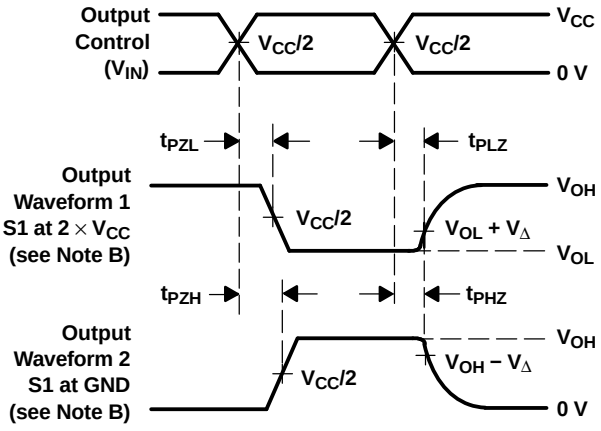

VOLTAGE WAVEFORMS
ENABLE AND DISABLE TIMES

NOTES: A. C_L includes probe and jig capacitance.
B. Waveform 1 is for an output with internal conditions such that the output is low, except when disabled by the output control. Waveform 2 is for an output with internal conditions such that the output is high, except when disabled by the output control.
C. All input pulses are supplied by generators having the following characteristics: PRR ≤ 10 MHz, Z_O = 50 Ω, t_r < 25 ns, t_f < 25 ns.
D. The outputs are measured one at a time, with one transition per measurement.
E. t_{PLZ} and t_{PHZ} are the same as t_{dis}.
F. t_{PZL} and t_{PZH} are the same as t_{en}.
G. t_{PLH} and t_{PHL} are the same as $t_{pd(s)}$. The tpd propagation delay is the calculated RC time constant of the typical ON-state resistance of the switch and the specified load capacitance, when driven by an ideal voltage source (zero output impedance).
H. All parameters and waveforms are not applicable to all devices.

Figure 5. Test Circuit and Voltage Waveforms

PARAMETER MEASUREMENT INFORMATION (continued)

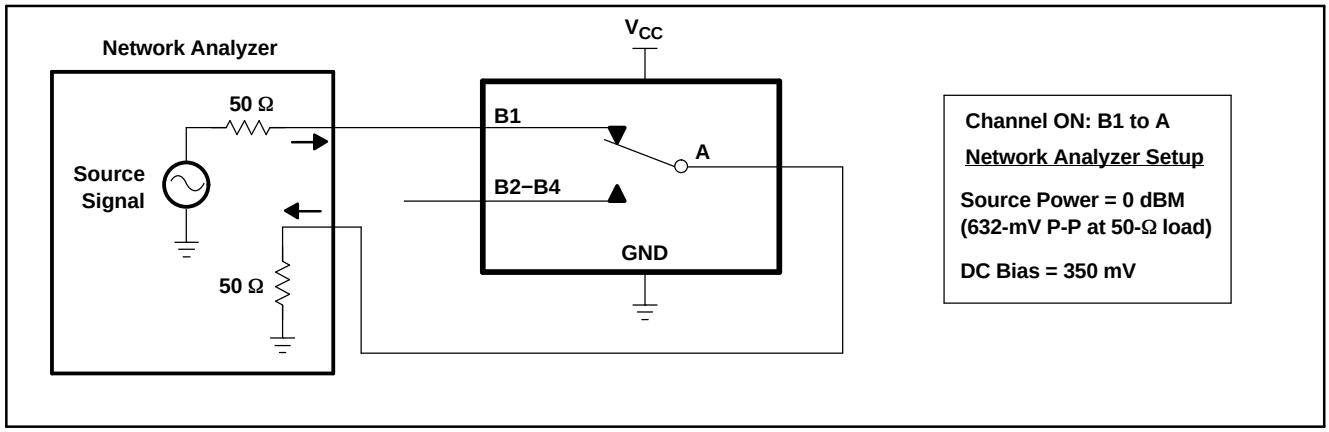

Figure 6. Bandwidth (BW)

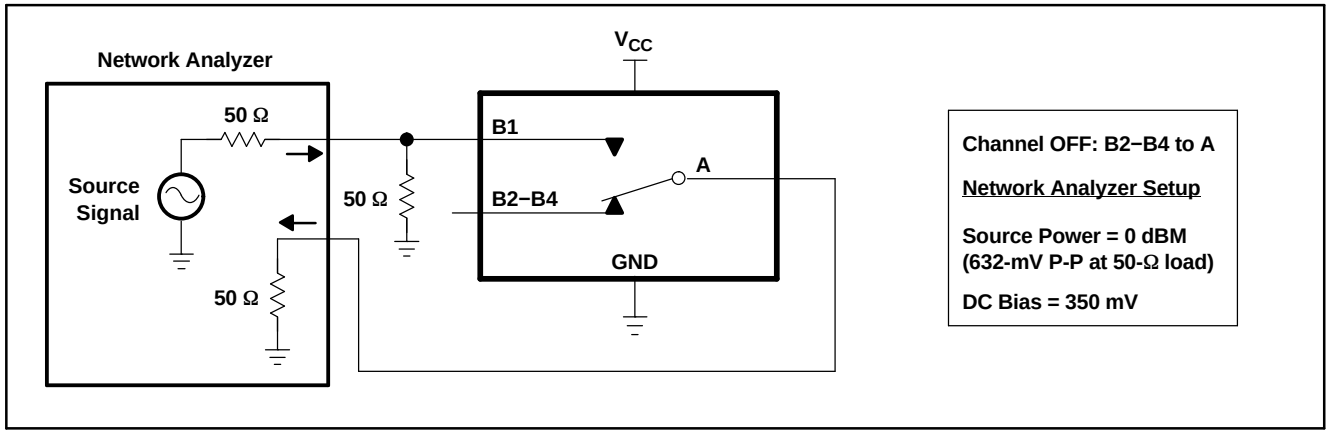

Figure 7. OFF Isolation (O_{ISO})

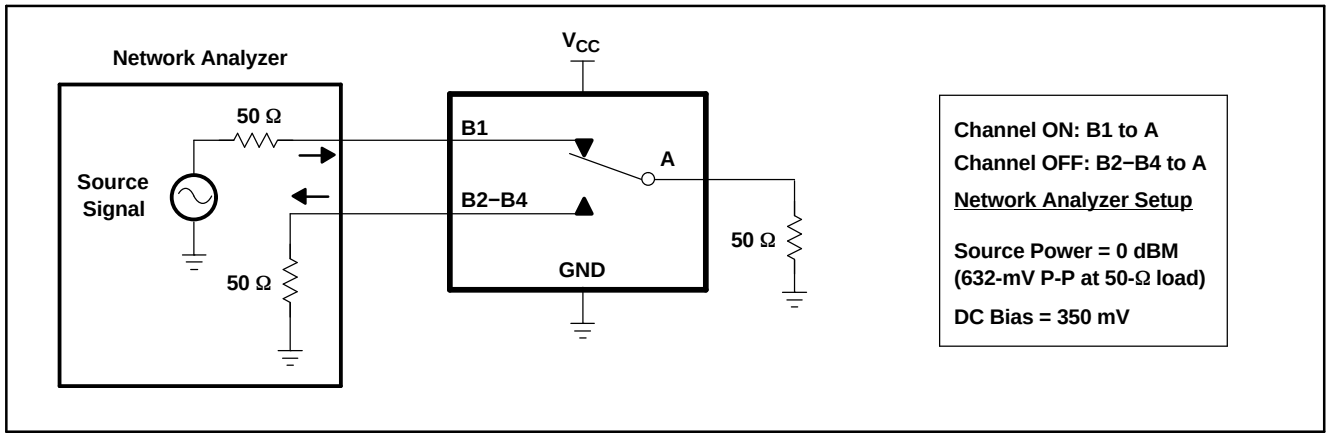

Figure 8. Crosstalk (X_{TALK})

PARAMETER MEASUREMENT INFORMATION (continued)

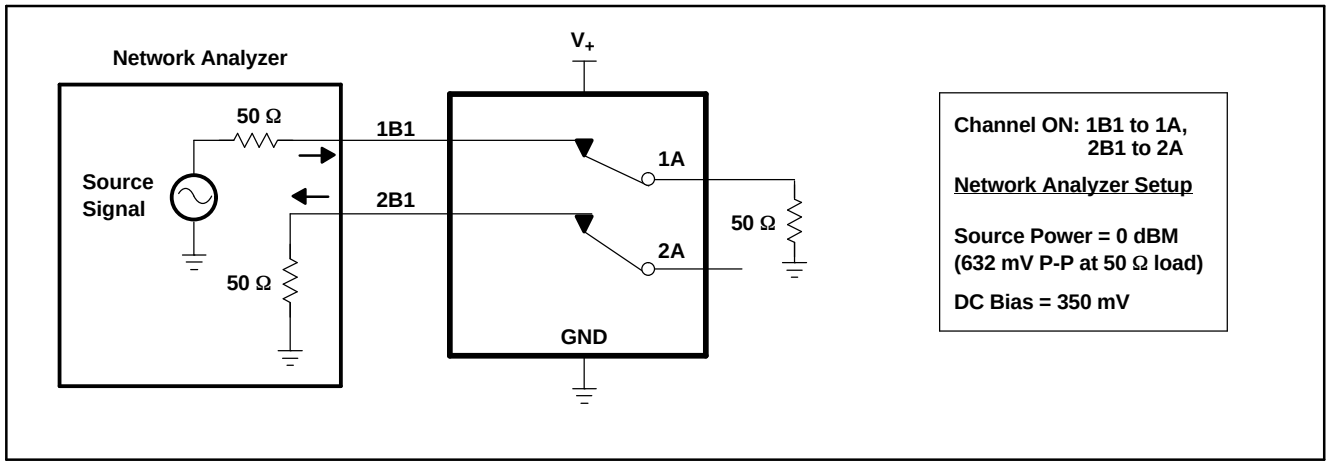

Figure 9. Adjacent Channel Crosstalk (X_{TALK})

MECHANICAL DATA

DBQ (R–PDSO–G**) PLASTIC SMALL-OUTLINE PACKAGE

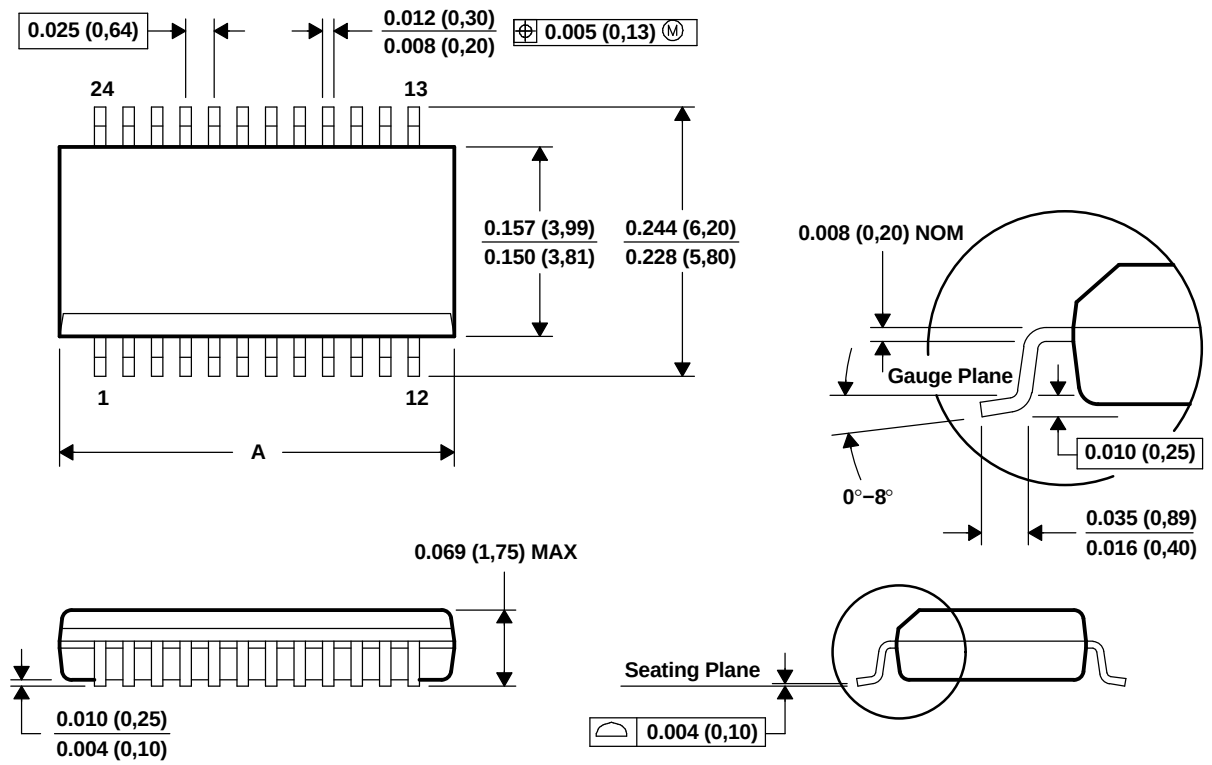

DIM \ PINS **	16	20	24	28
A MAX	0.197 (5,00)	0.344 (8,74)	0.344 (8,74)	0.394 (10,01)
A MIN	0.189 (4,80)	0.337 (8,56)	0.337 (8,56)	0.386 (9,80)
D M0−137 VARIATION	AB	AD	AE	AF

4073301/F 02/2002

A. All linear dimensions are in inches (millimeters).

B. This drawing is subject ot change without notice.

C. Body dimensions do not include mold flash or protrusion not to exceed 0.006 (0,15).

D. Falls within JEDEC MO-137.

MECHANICAL DATA (continued)

PW (R–PDSO–G)** **PLASTIC SMALL-OUTLINE PACKAGE**

14 PINS SHOWN

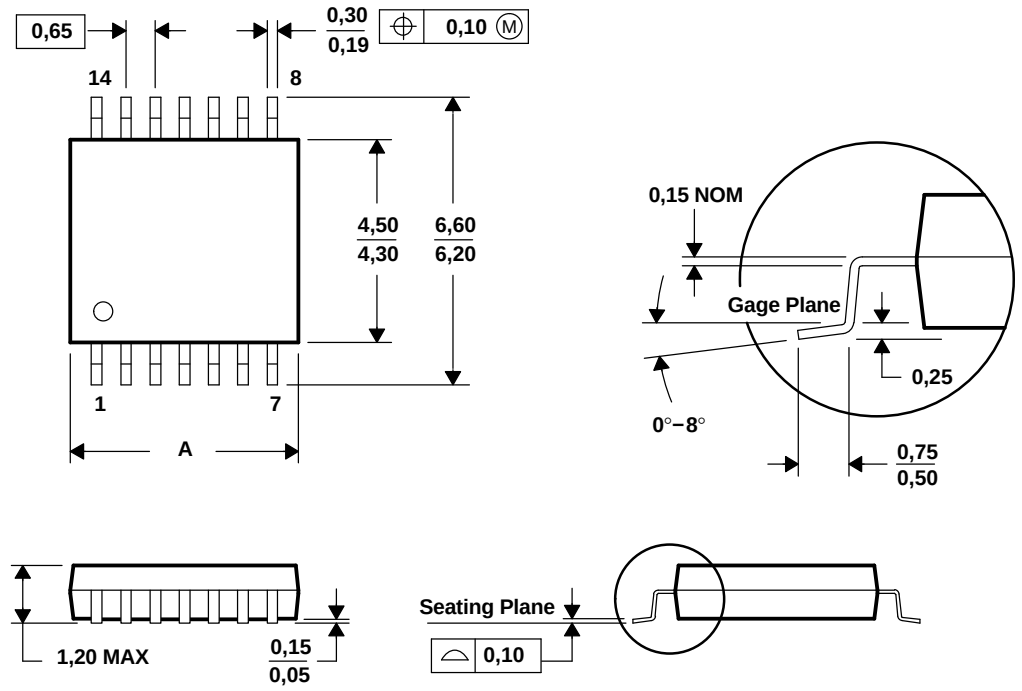

DIM \ PINS **	8	14	16	20	24	28
A MAX	3,10	5,10	5,10	6,60	7,90	9,80
A MIN	2,90	4,90	4,90	6,40	7,70	9,60

4040064/F 01/97

A. All linear dimensions are in millimeters.

B. This drawing is subject to change without notice.

C. Body dimensions do not include mold flash or protrusion not to exceed 0, 15.

D. Falls within JEDEC MO-153

PACKAGING INFORMATION

Orderable Device	Status (1)	Package Type	Package Drawing	Pins	Package Qty	Eco Plan (2)	Lead/ Ball Finish	MSL Peak Temp (3)	Samples (Requires Login)
TS5N214DBQR	ACTIVE	SSOP	DBQ	16	2500	Green (RoHS & no Sb/Br)	CU NIPDAU	Level-2-260C-1 YEAR	
TS5N214DBQRE4	ACTIVE	SSOP	DBQ	16	2500	Green (RoHS & no Sb/Br)	CU NIPDAU	Level-2-260C-1 YEAR	
TS5N214DBQRG4	ACTIVE	SSOP	DBQ	16	2500	Green (RoHS & no Sb/Br)	CU NIPDAU	Level-2-260C-1 YEAR	
TS5N214PW	ACTIVE	TSSOP	PW	16	90	Green (RoHS & no Sb/Br)	CU NIPDAU	Level-1-260C-UNLIM	
TS5N214PWE4	ACTIVE	TSSOP	PW	16	90	Green (RoHS & no Sb/Br)	CU NIPDAU	Level-1-260C-UNLIM	
TS5N214PWG4	ACTIVE	TSSOP	PW	16	90	Green (RoHS & no Sb/Br)	CU NIPDAU	Level-1-260C-UNLIM	
TS5N214PWR	ACTIVE	TSSOP	PW	16	2000	Green (RoHS & no Sb/Br)	CU NIPDAU	Level-1-260C-UNLIM	
TS5N214PWRE4	ACTIVE	TSSOP	PW	16	2000	Green (RoHS & no Sb/Br)	CU NIPDAU	Level-1-260C-UNLIM	
TS5N214PWRG4	ACTIVE	TSSOP	PW	16	2000	Green (RoHS & no Sb/Br)	CU NIPDAU	Level-1-260C-UNLIM	

(1) The marketing status values are defined as follows:
ACTIVE: Product device recommended for new designs.
LIFEBUY: TI has announced that the device will be discontinued, and a lifetime-buy period is in effect.
NRND: Not recommended for new designs. Device is in production to support existing customers, but TI does not recommend using this part in a new design.
PREVIEW: Device has been announced but is not in production. Samples may or may not be available.
OBSOLETE: TI has discontinued the production of the device.

(2) Eco Plan - The planned eco-friendly classification: Pb-Free (RoHS), Pb-Free (RoHS Exempt), or Green (RoHS & no Sb/Br) - please check http://www.ti.com/productcontent for the latest availability information and additional product content details.
TBD: The Pb-Free/Green conversion plan has not been defined.
Pb-Free (RoHS): TI's terms "Lead-Free" or "Pb-Free" mean semiconductor products that are compatible with the current RoHS requirements for all 6 substances, including the requirement that lead not exceed 0.1% by weight in homogeneous materials. Where designed to be soldered at high temperatures, TI Pb-Free products are suitable for use in specified lead-free processes.
Pb-Free (RoHS Exempt): This component has a RoHS exemption for either 1) lead-based flip-chip solder bumps used between the die and package, or 2) lead-based die adhesive used between the die and leadframe. The component is otherwise considered Pb-Free (RoHS compatible) as defined above.
Green (RoHS & no Sb/Br): TI defines "Green" to mean Pb-Free (RoHS compatible), and free of Bromine (Br) and Antimony (Sb) based flame retardants (Br or Sb do not exceed 0.1% by weight in homogeneous material)

(3) MSL, Peak Temp. -- The Moisture Sensitivity Level rating according to the JEDEC industry standard classifications, and peak solder temperature.

Important Information and Disclaimer: The information provided on this page represents TI's knowledge and belief as of the date that it is provided. TI bases its knowledge and belief on information provided by third parties, and makes no representation or warranty as to the accuracy of such information. Efforts are underway to better integrate information from third parties. TI has taken and continues to take reasonable steps to provide representative and accurate information but may not have conducted destructive testing or chemical analysis on incoming materials and chemicals. TI and TI suppliers consider certain information to be proprietary, and thus CAS numbers and other limited information may not be available for release.

In no event shall TI's liability arising out of such information exceed the total purchase price of the TI part(s) at issue in this document sold by TI to Customer on an annual basis.

TAPE AND REEL INFORMATION

REEL DIMENSIONS

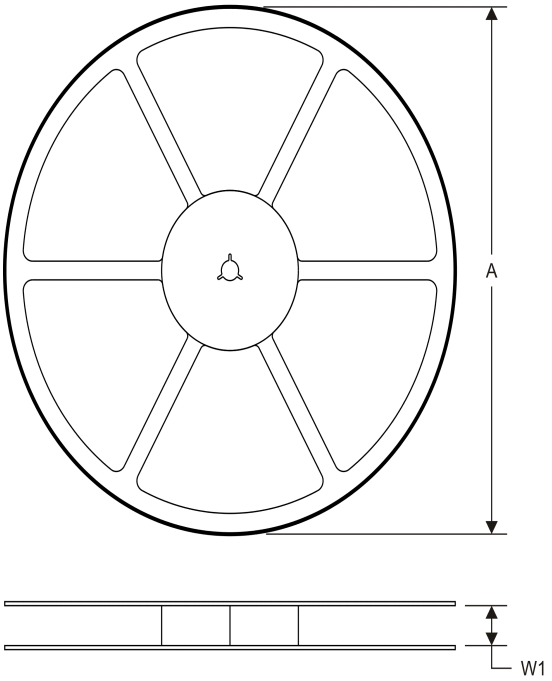

TAPE DIMENSIONS

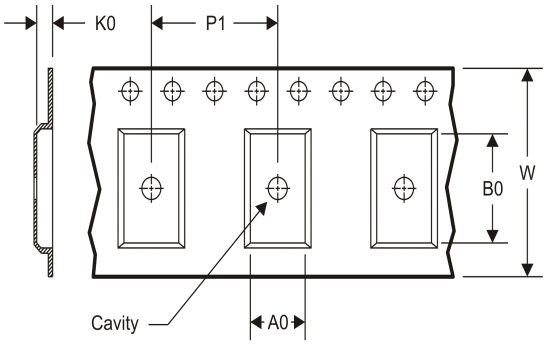

A0	Dimension designed to accommodate the component width
B0	Dimension designed to accommodate the component length
K0	Dimension designed to accommodate the component thickness
W	Overall width of the carrier tape
P1	Pitch between successive cavity centers

TAPE AND REEL INFORMATION

*All dimensions are nominal

Device	Package Type	Package Drawing	Pins	SPQ	Reel Diameter (mm)	Reel Width W1 (mm)	A0 (mm)	B0 (mm)	K0 (mm)	P1 (mm)	W (mm)	Pin1 Quadrant
TS5N214PWR	TSSOP	PW	16	2000	330.0	12.4	6.9	5.6	1.6	8.0	12.0	Q1

TAPE AND REEL BOX DIMENSIONS

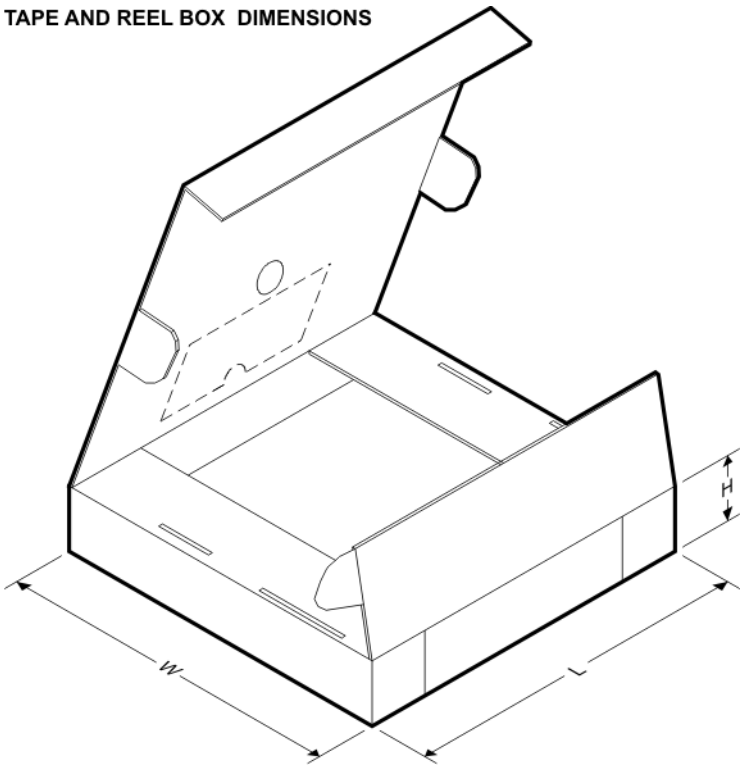

*All dimensions are nominal

Device	Package Type	Package Drawing	Pins	SPQ	Length (mm)	Width (mm)	Height (mm)
TS5N214PWR	TSSOP	PW	16	2000	367.0	367.0	35.0

PW (R–PDSO–G16) PLASTIC SMALL OUTLINE

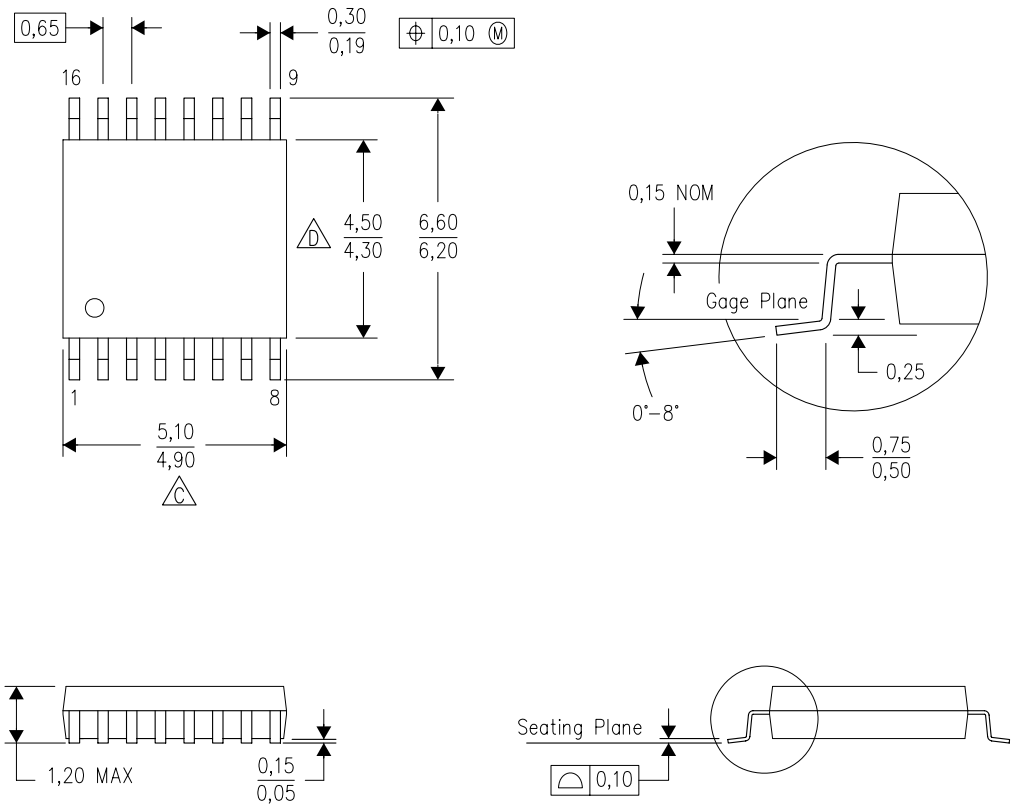

4040064–4/G 02/11

NOTES:
A. All linear dimensions are in millimeters. Dimensioning and tolerancing per ASME Y14.5M–1994.
B. This drawing is subject to change without notice.
C. Body length does not include mold flash, protrusions, or gate burrs. Mold flash, protrusions, or gate burrs shall not exceed 0,15 each side.
D. Body width does not include interlead flash. Interlead flash shall not exceed 0,25 each side.
E. Falls within JEDEC MO–153

PW (R–PDSO–G16) PLASTIC SMALL OUTLINE

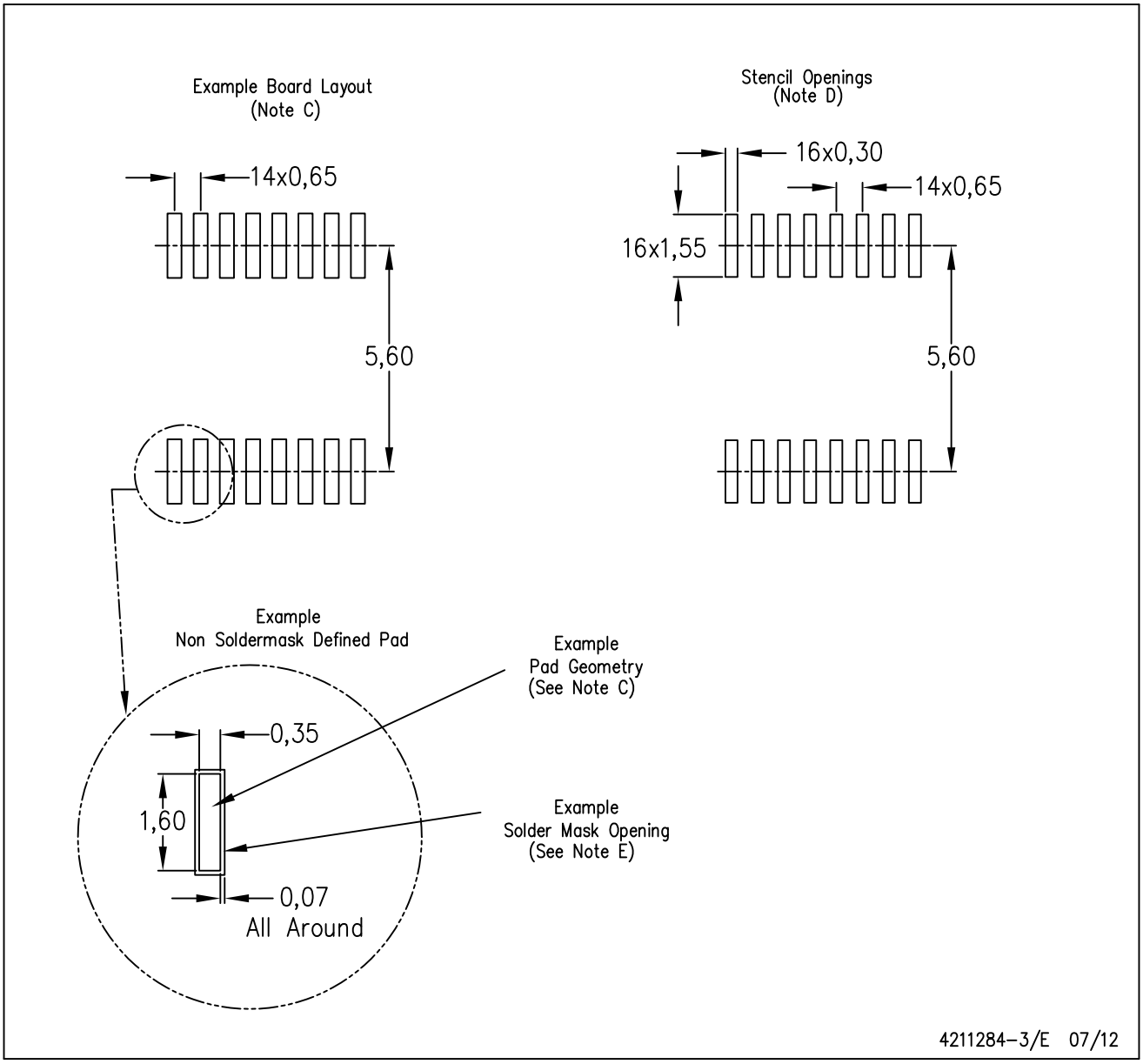

NOTES:
A. All linear dimensions are in millimeters.
B. This drawing is subject to change without notice.
C. Publication IPC–7351 is recommended for alternate designs.
D. Laser cutting apertures with trapezoidal walls and also rounding corners will offer better paste release. Customers should contact their board assembly site for stencil design recommendations. Refer to IPC–7525 for other stencil recommendations.
E. Customers should contact their board fabrication site for solder mask tolerances between and around signal pads.

DBQ (R–PDSO–G16) PLASTIC SMALL–OUTLINE PACKAGE

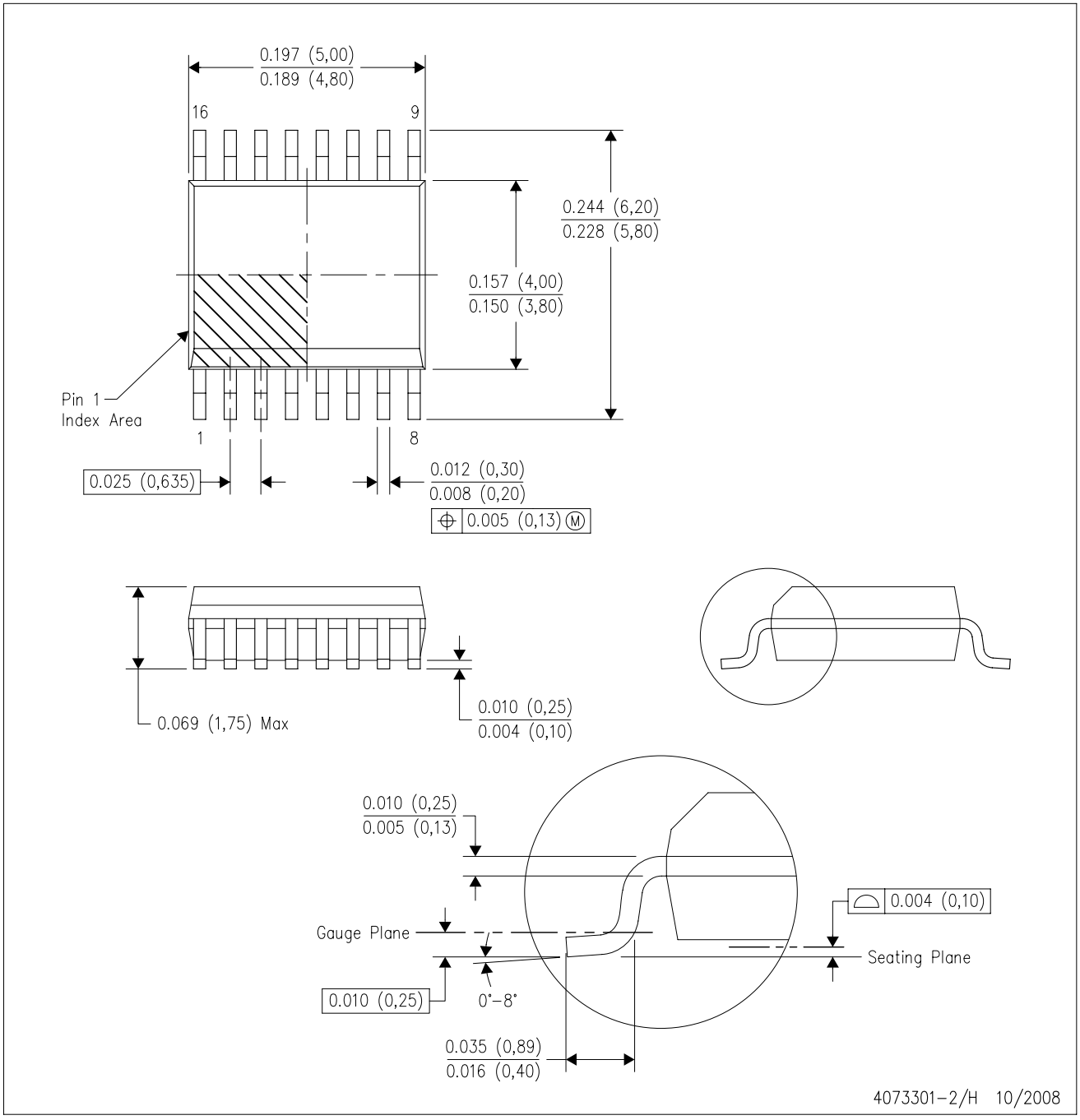

NOTES:
A. All linear dimensions are in inches (millimeters).
B. This drawing is subject to change without notice.
C. Body dimensions do not include mold flash or protrusion not to exceed 0.006 (0,15) per side.
D. Falls within JEDEC MO–137 variation AB.

DBQ (R–PDSO–G16) PLASTIC SMALL OUTLINE PACKAGE

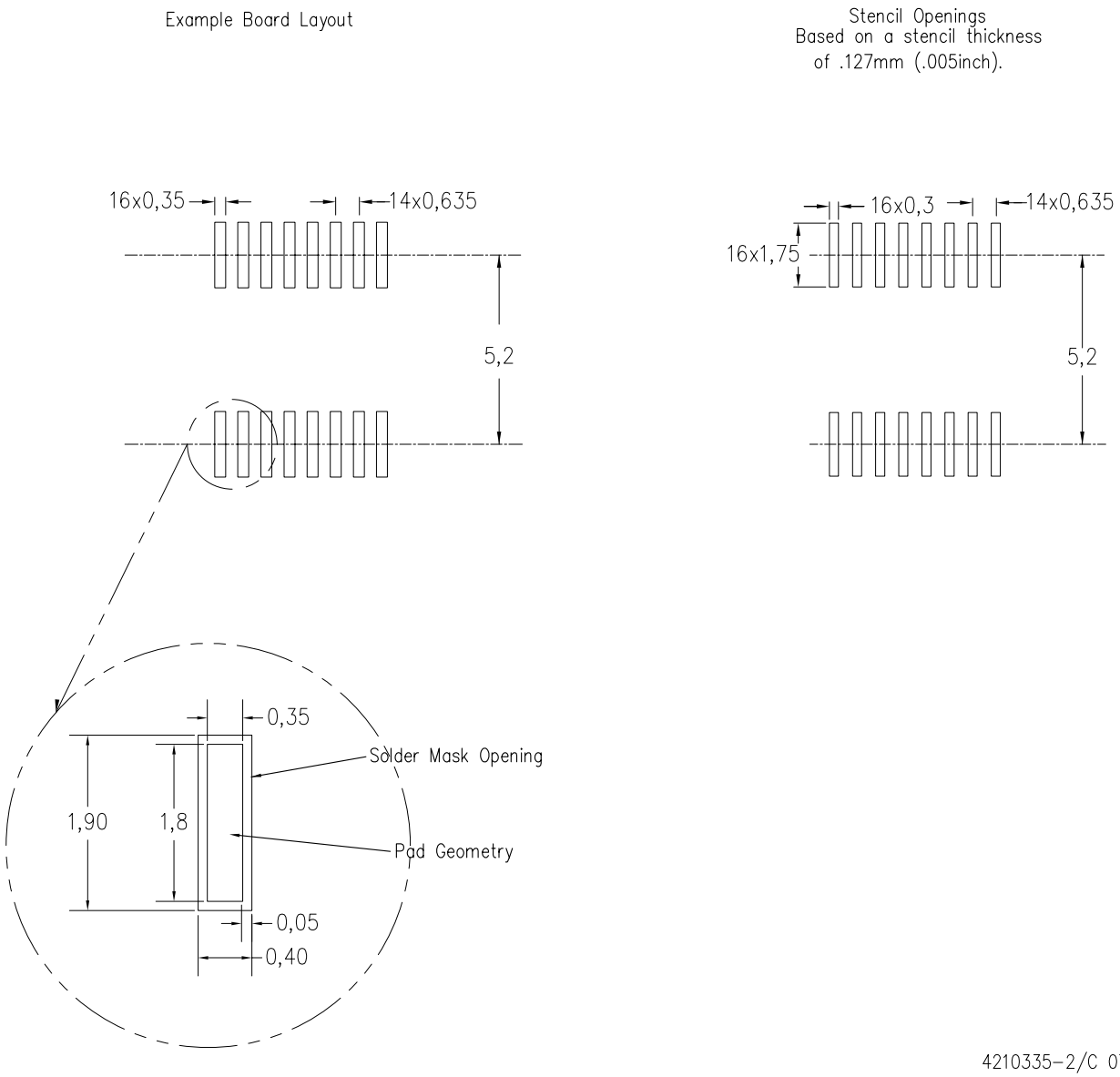

NOTES:
A. All linear dimensions are in millimeters.
B. This drawing is subject to change without notice.
C. Customers should place a note on the circuit board fabrication drawing not to alter the center solder mask defined pad.
D. Publication IPC–7351 is recommended for alternate designs.
E. Laser cutting apertures with trapezoidal walls and also rounding corners will offer better paste release. Customers should contact their board assembly site for stencil design recommendations. Example stencil design based on a 50% volumetric metal load solder paste. Refer to IPC–7525 for other stencil recommendations.

IMPORTANT NOTICE

Texas Instruments Incorporated and its subsidiaries (TI) reserve the right to make corrections, enhancements, improvements and other changes to its semiconductor products and services per JESD46C and to discontinue any product or service per JESD48B. Buyers should obtain the latest relevant information before placing orders and should verify that such information is current and complete. All semiconductor products (also referred to herein as “components”) are sold subject to TI’s terms and conditions of sale supplied at the time of order acknowledgment.

TI warrants performance of its components to the specifications applicable at the time of sale, in accordance with the warranty in TI’s terms and conditions of sale of semiconductor products. Testing and other quality control techniques are used to the extent TI deems necessary to support this warranty. Except where mandated by applicable law, testing of all parameters of each component is not necessarily performed.

TI assumes no liability for applications assistance or the design of Buyers’ products. Buyers are responsible for their products and applications using TI components. To minimize the risks associated with Buyers’ products and applications, Buyers should provide adequate design and operating safeguards.

TI does not warrant or represent that any license, either express or implied, is granted under any patent right, copyright, mask work right, or other intellectual property right relating to any combination, machine, or process in which TI components or services are used. Information published by TI regarding third-party products or services does not constitute a license to use such products or services or a warranty or endorsement thereof. Use of such information may require a license from a third party under the patents or other intellectual property of the third party, or a license from TI under the patents or other intellectual property of TI.

Reproduction of significant portions of TI information in TI data books or data sheets is permissible only if reproduction is without alteration and is accompanied by all associated warranties, conditions, limitations, and notices. TI is not responsible or liable for such altered documentation. Information of third parties may be subject to additional restrictions.

Resale of TI components or services with statements different from or beyond the parameters stated by TI for that component or service voids all express and any implied warranties for the associated TI component or service and is an unfair and deceptive business practice. TI is not responsible or liable for any such statements.

Buyer acknowledges and agrees that it is solely responsible for compliance with all legal, regulatory and safety-related requirements concerning its products, and any use of TI components in its applications, notwithstanding any applications-related information or support that may be provided by TI. Buyer represents and agrees that it has all the necessary expertise to create and implement safeguards which anticipate dangerous consequences of failures, monitor failures and their consequences, lessen the likelihood of failures that might cause harm and take appropriate remedial actions. Buyer will fully indemnify TI and its representatives against any damages arising out of the use of any TI components in safety-critical applications.

In some cases, TI components may be promoted specifically to facilitate safety-related applications. With such components, TI’s goal is to help enable customers to design and create their own end-product solutions that meet applicable functional safety standards and requirements. Nonetheless, such components are subject to these terms.

No TI components are authorized for use in FDA Class III (or similar life-critical medical equipment) unless authorized officers of the parties have executed a special agreement specifically governing such use.

Only those TI components which TI has specifically designated as military grade or “enhanced plastic” are designed and intended for use in military/aerospace applications or environments. Buyer acknowledges and agrees that any military or aerospace use of TI components which have ***not*** been so designated is solely at the Buyer's risk, and that Buyer is solely responsible for compliance with all legal and regulatory requirements in connection with such use.

TI has specifically designated certain components which meet ISO/TS16949 requirements, mainly for automotive use. Components which have not been so designated are neither designed nor intended for automotive use; and TI will not be responsible for any failure of such components to meet such requirements.

Products		**Applications**	
Audio	www.ti.com/audio	Automotive and Transportation	www.ti.com/automotive
Amplifiers	amplifier.ti.com	Communications and Telecom	www.ti.com/communications
Data Converters	dataconverter.ti.com	Computers and Peripherals	www.ti.com/computers
DLP® Products	www.dlp.com	Consumer Electronics	www.ti.com/consumer-apps
DSP	dsp.ti.com	Energy and Lighting	www.ti.com/energy
Clocks and Timers	www.ti.com/clocks	Industrial	www.ti.com/industrial
Interface	interface.ti.com	Medical	www.ti.com/medical
Logic	logic.ti.com	Security	www.ti.com/security
Power Mgmt	power.ti.com	Space, Avionics and Defense	www.ti.com/space-avionics-defense
Microcontrollers	microcontroller.ti.com	Video and Imaging	www.ti.com/video
RFID	www.ti-rfid.com		
OMAP Mobile Processors	www.ti.com/omap	**TI E2E Community**	e2e.ti.com
Wireless Connectivity	www.ti.com/wirelessconnectivity		

Mailing Address: Texas Instruments, Post Office Box 655303, Dallas, Texas 75265
Copyright © 2012, Texas Instruments Incorporated

LifeElectronics
Живое партнерство

ООО «ЛайфЭлектроникс» **“LifeElectronics” LLC**

ИНН 7805602321 КПП 780501001 Р/С 40702810122510004610 ФАКБ "АБСОЛЮТ БАНК" (ЗАО) в г.Санкт-Петербурге К/С 30101810900000000703 БИК 044030703

Компания «Life Electronics» занимается поставками электронных компонентов импортного и отечественного производства от производителей и со складов крупных дистрибьюторов Европы, Америки и Азии.

С конца 2013 года компания активно расширяет линейку поставок компонентов по направлению коаксиальный кабель, кварцевые генераторы и конденсаторы (керамические, пленочные, электролитические), за счёт заключения дистрибьюторских договоров

Мы предлагаем:

- *Конкурентоспособные цены и скидки постоянным клиентам.*
- *Специальные условия для постоянных клиентов.*
- *Подбор аналогов.*
- *Поставку компонентов в любых объемах, удовлетворяющих вашим потребностям.*

- *Приемлемые сроки поставки, возможна ускоренная поставка.*
- *Доставку товара в любую точку России и стран СНГ.*
- *Комплексную поставку.*
- *Работу по проектам и поставку образцов.*
- *Формирование склада под заказчика.*

- *Сертификаты соответствия на поставляемую продукцию (по желанию клиента).*
- *Тестирование поставляемой продукции.*
- *Поставку компонентов, требующих военную и космическую приемку.*
- *Входной контроль качества.*
- *Наличие сертификата ISO.*

В составе нашей компании организован Конструкторский отдел, призванный помогать разработчикам, и инженерам.

Конструкторский отдел помогает осуществить:

- *Регистрацию проекта у производителя компонентов.*
- *Техническую поддержку проекта.*
- *Защиту от снятия компонента с производства.*
- *Оценку стоимости проекта по компонентам.*
- *Изготовление тестовой платы монтаж и пусконаладочные работы.*

Тел: +7 (812) 336 43 04 (многоканальный)
Email: org@lifeelectronics.ru

www.lifeelectronics.ru