Slim Incremental 50-mm-dia. Rotary Encoder

E6C2-C

CSM_E6C2-C_DS_E_5_1

General-purpose Encoder with External Diameter of 50 mm

- Incremental model
- External diameter of 50 mm.
- Resolution of up to 2,000 ppr.
- IP64 (improved oil-proof construction with sealed bearings)
- Side or back connections are possible. Pre-wired Models with cable connected at an angle.

Be sure to read *Safety Precautions* on page 4.

Ordering Information

Encoders [Refer to *Dimensions* on page 4.]

Power supply voltage	Output configuration	Resolution (pulses/rotation)	Model
5 to 24 VDC	Open-collector output (NPN)	10, 20, 30, 40, 50, 60, 100, 200, 300, 360, 400, 500, 600	**E6C2-CWZ6C (resolution) 2M** Example: E6C2-CWZ6C 10P/R 2M
		720, 800, 1,000, 1,024, 1,200, 1,500, 1,800, 2,000	
12 to 24 VDC	Open-collector output (PNP)	100, 200, 360, 500, 600	**E6C2-CWZ5B (resolution) 2M** Example: E6C2-CWZ5B 100P/R 2M
		1,000, 2,000	
5 to 12 VDC	Voltage output	10, 20, 30, 40, 50, 60, 100, 200, 300, 360, 400, 500, 600	**E6C2-CWZ3E (resolution) 2M** Example: E6C2-CWZ3E 10P/R 2M
		720, 800, 1,000, 1,024, 1,200, 1,500, 1,800, 2,000	
5 VDC	Line-driver output	10, 20, 30, 40, 50, 60, 100, 200, 300, 360, 400, 500, 600	**E6C2-CWZ1X (resolution) 2M** Example: E6C2-CWZ1X 10P/R 2M
		720, 800, 1,000, 1,024, 1,200, 1,500, 1,800, 2,000	

Accessories (Order Separately) [Refer to *Dimensions* on *Rotary Encoder Accessories*.]

Name	Model	Remarks
Couplings	**E69-C06B**	---
	E69-C68B	Different end diameter
	E69-C610B	Different end diameter
	E69-C06M	Metal construction
Flanges	**E69-FCA**	---
	E69-FCA02	E69-2 Servo Mounting Bracket provided.
Servo Mounting Bracket	**E69-2**	Provided with E69-FCA02 Flange.

Refer to *Accessories* for details.

Ratings and Specifications

Item / Model	E6C2-CWZ6C	E6C2-CWZ5B	E6C2-CWZ3E	E6C2-CWZ1X
Power supply voltage	5 VDC –5% to 24 VDC +15%, ripple (p-p): 5% max.	12 VDC –10% to 24 VDC +15%, ripple (p-p): 5% max.	5 VDC –5% to 12 VDC +10%, ripple (p-p): 5% max.	5 VDC ±5%, ripple (p-p): 5% max.
Current consumption*1	80 mA max.	100 mA max.		160 mA max.
Resolution (pulses/rotation)	10, 20, 30, 40, 50, 60, 100, 200, 300, 360, 400, 500, 600, 720, 800, 1,000, 1,024, 1,200, 1,500, 1,800, 2,000	100, 200, 360, 500, 600, 1,000, 2,000	10, 20, 30, 40, 50, 60, 100, 200, 300, 360, 400, 500, 600, 720, 800, 1,000, 1,024, 1,200, 1,500, 1,800, 2,000	
Output phases	Phases A, B, and Z			Phases A, $\overline{A}$, B, $\overline{B}$, Z, and $\overline{Z}$
Output configuration	NPN open-collector output	PNP open-collector output	Voltage output (NPN output)	Line driver output*2
Output capacity	Applied voltage: 30 VDC max. Sink current: 35 mA max. Residual voltage: 0.4 V max. (at sink current of 35 mA)	Applied voltage: 30 VDC max. Source current: 35 mA max. Residual voltage: 0.4 V max. (at source current of 35 mA)	Output resistance: 2 kΩ Output current: 20 mA max. Residual voltage: 0.4 V max. (at sink current of 20 mA)	AM26LS31 equivalent Output voltage: High level: I_O = –20 mA Low level: I_S = 20 mA Output voltage: V_O = 2.5 V min. V_S = 0.5 V max.
Maximum response frequency*3	100 kHz	50 kHz	100 kHz	
Phase difference between outputs	90°±45° between A and B (1/4 T ± 1/8 T)			
Rise and fall times of output	1 μs max. (Control output voltage: 5 V, Load resistance: 1 kΩ, Cable length: 2 m)	1 μs max. (Cable length: 2 m, Sink current: 10 mA)		0.1 μs max. (Cable length: 2 m, I_O = –20 mA, I_S = 20 mA)
Starting torque	10 mN·m max.			
Moment of inertia	1×10^{-6} kg·m² max.; 3×10^{-7} kg·m² max. at 600 P/R max.			
Shaft loading Radial	50 N			
Shaft loading Thrust	30 N			
Maximum permissible speed	6,000 r/min			
Protection circuits	Power supply reverse polarity protection, Load short-circuit protection			---
Ambient temperature range	Operating: –10 to 70°C (with no icing), Storage: –25 to 85°C (with no icing)			
Ambient humidity range	Operating/Storage: 35% to 85% (with no condensation)			
Insulation resistance	20 MΩ min. (at 500 VDC) between current-carrying parts and case			
Dielectric strength	500 VAC, 50/60 Hz for 1 min between current-carrying parts and case			
Vibration resistance	Destruction: 10 to 500 Hz, 150 m/s² or 2-mm double amplitude for 11 min 3 times each in X, Y, and Z directions			
Shock resistance	Destruction: 1,000 m/s² 3 times each in X, Y, and Z directions			
Degree of protection	IEC 60529 IP64, in-house standards: oilproof			
Connection method	Pre-wired Models (Standard cable length: 2 m)			
Material	Case: Zinc alloy, Main unit: Aluminum, Shaft: SUS420J2			
Weight (packed state)	Approx. 400 g			
Accessories	Instruction manual Note: Coupling, mounting bracket and hex-head spanner are sold separately.			

Note: Origin Indication
The following illustration shows the relationship between phase Z and the origin. Set cut face D to the phase Z origin as shown in the illustration.

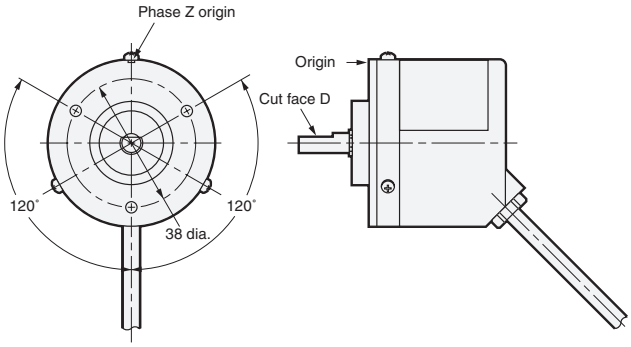

*1. An inrush current of approximately 9 A will flow for approximately 0.3 ms when the power is turned ON.
*2. The line driver output is a data transmission circuit compatible with RS-422A and long-distance transmission is possible with a twisted-pair cable.(AM26LS31 equivalent)
*3. The maximum electrical response speed is determined by the resolution and maximum response frequency as follows:

$$\text{Maximum electrical response speed (rpm)} = \frac{\text{Maximum response frequency}}{\text{Resolution}} \times 60$$

This means that the E6C2-C Rotary Encoder will not operate electrically if its speed exceeds the maximum electrical response speed.

I/O Circuit Diagrams

Model/Output Circuits	Output mode	Connection

E6C2-CWZ6C

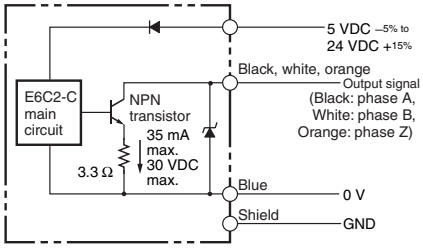

E6C2-CWZ5B

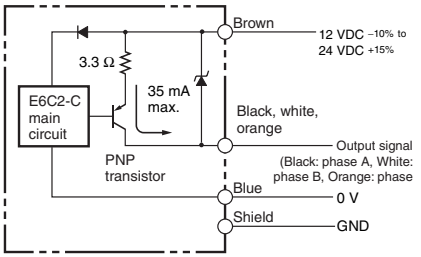

E6C2-CWZ6C NPN Open-collector Output Model
E6C2-CWZ5B PNP Open-collector Output Model

Direction of rotation: CW
(as viewed from end of shaft)

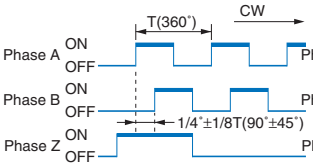

Note: Phase A is 1/4 T ± 1/8 T faster than phase B.

Direction of rotation: CCW
(as viewed from end of shaft)

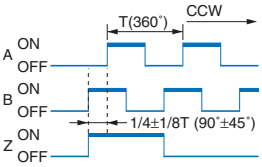

Note: Phase A is 1/4 T ± 1/8 T slower than phase B.

(The ONs in the above timing chart mean that the output transistor is ON and the OFFs mean that the output transistor is OFF.)

Color	Terminal
Brown	Power supply (+Vcc)
Black	Output phase A
White	Output phase B
Orange	Output phase Z
Blue	0 V (common)

E6C2-CWZ3E

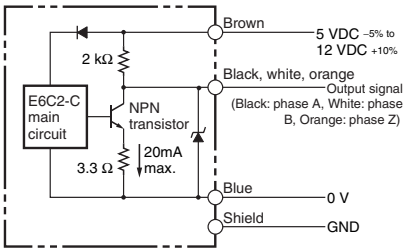

E6C2-CWZ3E Voltage Output Model

Direction of rotation: CW
(as viewed from end of shaft)

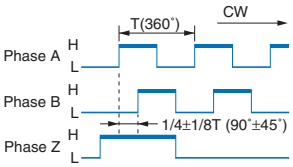

Note: Phase A is 1/4 T ± 1/8 T faster than phase B.

Direction of rotation: CCW
(as viewed from end of shaft)

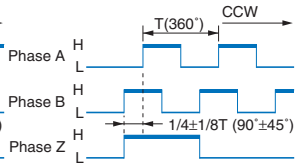

Note: Phase A is 1/4 T ± 1/8 T slower than phase B.

E6C2-CWZ1X

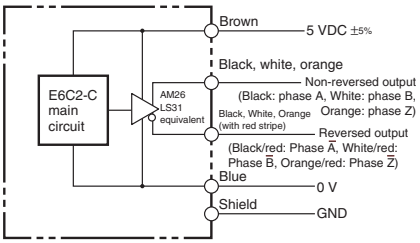

E6C2-CWZ1X Line Driver Output Model

Direction of rotation: CW
(as viewed from end of shaft)

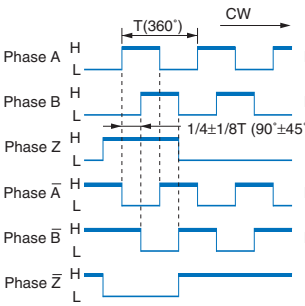

Direction of rotation: CCW
(as viewed from end of shaft)

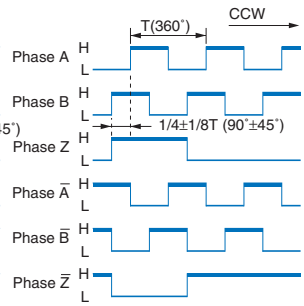

Color	Terminal
Brown	Power supply (+Vcc)
Black	Output phase A
White	Output phase B
Orange	Output phase Z
Black/red stripes	Output phase Ā
White/red stripes	Output phase B̄
Orange/ red stripes	Output phase Z̄
Blue	0 V (common)

Note: Receiver: AM26LS32 equivalent

Note: 1. The shielded cable outer core (shield) is not connected to the inner area or to the case.
2. The phase A, phase B, and phase Z circuits are all identical.
3. Normally, connect GND to 0 V or to an external ground.

Safety Precautions

Refer to *Warranty and Limitations of Liability*.

⚠ WARNING

This product is not designed or rated for ensuring safety of persons either directly or indirectly. Do not use it for such purposes.

Precautions for Correct Use

Do not use the Encoder under ambient conditions that exceed the ratings.

● Wiring

Cable Extension Characteristics

- When the cable length is extended, the output waveform startup time is lengthened and it affects the phase difference characteristics of phases A and B. Conditions will change according to frequency, noise, and other factors. As a guideline, use a cable length of 10 m* or less. If the cable must be more than 2 m, use a Model with a Line-driver Output (max. length for line-driver output: 100 m).

* Recommended Cable
Conductor cross section: 0.2 mm^2
Spiral shield
Conductor resistance: 92 Ω/km max. (20°C)
Insulation resistance: 5 Ω/km min. (20°C)

- The output waveform startup time changes not only according to the length of the cable, but also according to the load resistance and the cable type.
- Extending the cable length not only changes the startup time, but also increases the output residual voltage.

● Connection

Spurious pulses may be generated when power is turned ON and OFF. Wait at least 0.1 s after turning ON the power to the Encoder before using the connected device, and stop using the connected device at least 0.1 s before turning OFF the power to the Encoder. Also, turn ON the power to the load only after turning ON the power to the Encoder.

(Unit: mm)

Dimensions

Tolerance class IT16 applies to dimensions in this datasheet unless otherwise specified.

Encoder

E6C2-CWZ□□

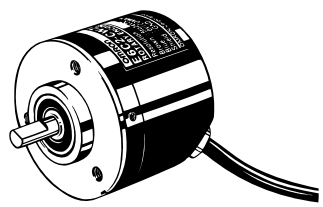

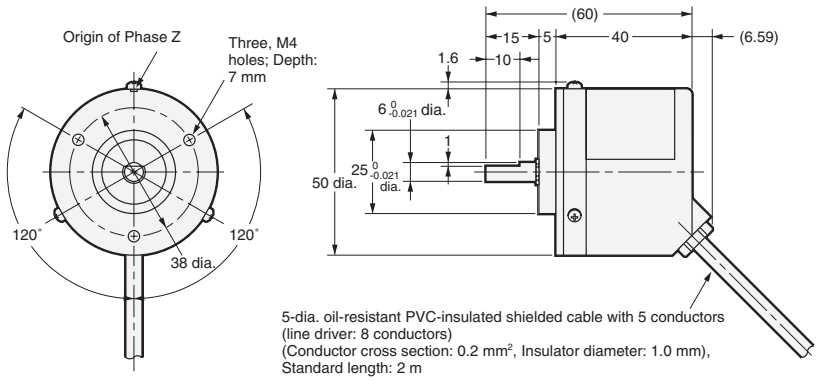

Accessories (Order Separately)

Couplings

E69-C06B
E69-C68B
E69-C610B
E69-C06M

Flanges

E69-FCA
E69-FCA02

Servo Mounting Bracket

E69-2 (Three brackets in a set.)
Refer to *Accessories* for details.

Read and Understand This Catalog

Please read and understand this catalog before purchasing the products. Please consult your OMRON representative if you have any questions or comments.

Warranty and Limitations of Liability

WARRANTY

OMRON's exclusive warranty is that the products are free from defects in materials and workmanship for a period of one year (or other period if specified) from date of sale by OMRON.

OMRON MAKES NO WARRANTY OR REPRESENTATION, EXPRESS OR IMPLIED, REGARDING NON-INFRINGEMENT, MERCHANTABILITY, OR FITNESS FOR PARTICULAR PURPOSE OF THE PRODUCTS. ANY BUYER OR USER ACKNOWLEDGES THAT THE BUYER OR USER ALONE HAS DETERMINED THAT THE PRODUCTS WILL SUITABLY MEET THE REQUIREMENTS OF THEIR INTENDED USE. OMRON DISCLAIMS ALL OTHER WARRANTIES, EXPRESS OR IMPLIED.

LIMITATIONS OF LIABILITY

OMRON SHALL NOT BE RESPONSIBLE FOR SPECIAL, INDIRECT, OR CONSEQUENTIAL DAMAGES, LOSS OF PROFITS OR COMMERCIAL LOSS IN ANY WAY CONNECTED WITH THE PRODUCTS, WHETHER SUCH CLAIM IS BASED ON CONTRACT, WARRANTY, NEGLIGENCE, OR STRICT LIABILITY.

In no event shall the responsibility of OMRON for any act exceed the individual price of the product on which liability is asserted.

IN NO EVENT SHALL OMRON BE RESPONSIBLE FOR WARRANTY, REPAIR, OR OTHER CLAIMS REGARDING THE PRODUCTS UNLESS OMRON'S ANALYSIS CONFIRMS THAT THE PRODUCTS WERE PROPERLY HANDLED, STORED, INSTALLED, AND MAINTAINED AND NOT SUBJECT TO CONTAMINATION, ABUSE, MISUSE, OR INAPPROPRIATE MODIFICATION OR REPAIR.

Application Considerations

SUITABILITY FOR USE

OMRON shall not be responsible for conformity with any standards, codes, or regulations that apply to the combination of products in the customer's application or use of the products.

At the customer's request, OMRON will provide applicable third party certification documents identifying ratings and limitations of use that apply to the products. This information by itself is not sufficient for a complete determination of the suitability of the products in combination with the end product, machine, system, or other application or use.

The following are some examples of applications for which particular attention must be given. This is not intended to be an exhaustive list of all possible uses of the products, nor is it intended to imply that the uses listed may be suitable for the products:

- Outdoor use, uses involving potential chemical contamination or electrical interference, or conditions or uses not described in this catalog.
- Nuclear energy control systems, combustion systems, railroad systems, aviation systems, medical equipment, amusement machines, vehicles, safety equipment, and installations subject to separate industry or government regulations.
- Systems, machines, and equipment that could present a risk to life or property.

Please know and observe all prohibitions of use applicable to the products.

NEVER USE THE PRODUCTS FOR AN APPLICATION INVOLVING SERIOUS RISK TO LIFE OR PROPERTY WITHOUT ENSURING THAT THE SYSTEM AS A WHOLE HAS BEEN DESIGNED TO ADDRESS THE RISKS, AND THAT THE OMRON PRODUCTS ARE PROPERLY RATED AND INSTALLED FOR THE INTENDED USE WITHIN THE OVERALL EQUIPMENT OR SYSTEM.

PROGRAMMABLE PRODUCTS

OMRON shall not be responsible for the user's programming of a programmable product, or any consequence thereof.

Disclaimers

CHANGE IN SPECIFICATIONS

Product specifications and accessories may be changed at any time based on improvements and other reasons.

It is our practice to change model numbers when published ratings or features are changed, or when significant construction changes are made. However, some specifications of the products may be changed without any notice. When in doubt, special model numbers may be assigned to fix or establish key specifications for your application on your request. Please consult with your OMRON representative at any time to confirm actual specifications of purchased products.

DIMENSIONS AND WEIGHTS

Dimensions and weights are nominal and are not to be used for manufacturing purposes, even when tolerances are shown.

PERFORMANCE DATA

Performance data given in this catalog is provided as a guide for the user in determining suitability and does not constitute a warranty. It may represent the result of OMRON's test conditions, and the users must correlate it to actual application requirements. Actual performance is subject to the OMRON Warranty and Limitations of Liability.

ERRORS AND OMISSIONS

The information in this document has been carefully checked and is believed to be accurate; however, no responsibility is assumed for clerical, typographical, or proofreading errors, or omissions.

2011.4

In the interest of product improvement, specifications are subject to change without notice.

OMRON Corporation
Industrial Automation Company

http://www.ia.omron.com/

(c)Copyright OMRON Corporation 2011 All Right Reserved.

Mouser Electronics

Authorized Distributor

Click to View Pricing, Inventory, Delivery & Lifecycle Information:

Omron:

E6C2-CWZ1X 1000P/R 2M E6C2-CWZ1X 100P/R 2M E6C2-CWZ1X 1200P/R 2M E6C2-CWZ1X 1500P/R 2M E6C2-CWZ1X 1800P/R 2M E6C2-CWZ1X 2000P/R 2M E6C2-CWZ1X 20P/R 2M E6C2-CWZ1X 30P/R 2M E6C2-CWZ1X 360P/R 2M E6C2-CWZ1X 400P/R 2M E6C2-CWZ1X 40P/R 2M E6C2-CWZ1X 500P/R 2M E6C2-CWZ1X 60P/R 2M E6C2-CWZ1X 720P/R 2M E6C2-CWZ3E-10 314P/R 5M E6C2-CWZ3E 10P/R 2M E6C2-CWZ3E 1200P/R 2M E6C2-CWZ3E 1500P/R 2M E6C2-CWZ3E 1800P/R 2M E6C2-CWZ3E 2000P/R 2M E6C2-CWZ3E 20P/R 2M E6C2-CWZ3E 300P/R 2M E6C2-CWZ3E 30P/R 2M E6C2-CWZ3E 360P/R 2M E6C2-CWZ3E 400P/R 2M E6C2-CWZ3E 40P/R 2M E6C2-CWZ3E 500P/R 2M E6C2-CWZ3E 600P/R 2M E6C2-CWZ3E 60P/R 2M E6C2-CWZ5B 1000P/R 2M E6C2-CWZ5B 2000P/R 2M E6C2-CWZ5B 200P/R 2M E6C2-CWZ5B 500P/R 2M E6C2-CWZ6C 1000P/R 2M E6C2-CWZ6C 100P/R 2M E6C2-CWZ6C 1024P/R 2M E6C2-CWZ6C 1200P/R 2M E6C2-CWZ6C-12 500P/R 10M E6C2-CWZ6C 1500P/R 2M E6C2-CWZ6C 1800P/R 2M E6C2-CWZ6C 2000P/R 2M E6C2-CWZ6C 20P/R 2M E6C2-CWZ6C 300P/R 2M E6C2-CWZ6C 30P/R 2M E6C2-CWZ6C 360P/R 2M E6C2-CWZ6C 400P/R 2M E6C2-CWZ6C 40P/R 2M E6C2-CWZ6C 50P/R 2M E6C2-CWZ6C 600P/R 2M E6C2-CWZ6C 60P/R 2M E6C2-CWZ6C 720P/R E6C2-CWZ6C 800P/R 2M E6C2-CWZ1X 1024P/R 2M E6C2CWZ6C10PR2M E6C2-CWZ6C 10P/R 2M

ООО «ЛайфЭлектроникс» “LifeElectronics” LLC

ИНН 7805602321 КПП 780501001 Р/С 40702810122510004610 ФАКБ "АБСОЛЮТ БАНК" (ЗАО) в г.Санкт-Петербурге К/С 30101810900000000703 БИК 044030703

Компания «Life Electronics» занимается поставками электронных компонентов импортного и отечественного производства от производителей и со складов крупных дистрибьюторов Европы, Америки и Азии.

С конца 2013 года компания активно расширяет линейку поставок компонентов по направлению коаксиальный кабель, кварцевые генераторы и конденсаторы (керамические, пленочные, электролитические), за счёт заключения дистрибьюторских договоров

Мы предлагаем:

- *Конкурентоспособные цены и скидки постоянным клиентам.*
- *Специальные условия для постоянных клиентов.*
- *Подбор аналогов.*
- *Поставку компонентов в любых объемах, удовлетворяющих вашим потребностям.*

- *Приемлемые сроки поставки, возможна ускоренная поставка.*
- *Доставку товара в любую точку России и стран СНГ.*
- *Комплексную поставку.*
- *Работу по проектам и поставку образцов.*
- *Формирование склада под заказчика.*

- *Сертификаты соответствия на поставляемую продукцию (по желанию клиента).*
- *Тестирование поставляемой продукции.*
- *Поставку компонентов, требующих военную и космическую приемку.*
- *Входной контроль качества.*
- *Наличие сертификата ISO.*

В составе нашей компании организован Конструкторский отдел, призванный помогать разработчикам, и инженерам.

Конструкторский отдел помогает осуществить:

- *Регистрацию проекта у производителя компонентов.*
- *Техническую поддержку проекта.*
- *Защиту от снятия компонента с производства.*
- *Оценку стоимости проекта по компонентам.*
- *Изготовление тестовой платы монтаж и пусконаладочные работы.*

Тел: +7 (812) 336 43 04 (многоканальный)
Email: org@lifeelectronics.ru

www.lifeelectronics.ru