TNY263-268

TinySwitch®-II Family

Enhanced, Energy Efficient, Low Power Off-line Switcher

Product Highlights

TinySwitch-II Features Reduce System Cost

- Fully integrated auto-restart for short circuit and open loop fault protection–saves external component costs
- Built-in circuitry practically eliminates audible noise with ordinary dip-varnished transformer
- Programmable line under-voltage detect feature prevents power on/off glitches–saves external components
- Frequency jittering dramatically reduces EMI (~10 dB) –minimizes EMI filter component costs
- 132 kHz operation reduces transformer size–allows use of EF12.6 or EE13 cores for low cost and small size
- Very tight tolerances and negligible temperature variation on key parameters eases design and lowers cost
- Lowest component count switcher solution
- Expanded scalable device family for low system cost

Better Cost/Performance over RCC & Linears

- Lower system cost than RCC, discrete PWM and other integrated/hybrid solutions
- Cost effective replacement for bulky regulated linears
- Simple ON/OFF control–no loop compensation needed
- No bias winding–simpler, lower cost transformer
- Simple design practically eliminates rework in manufacturing

EcoSmart®–Extremely Energy Efficient

- No load consumption < 50 mW with bias winding and < 250 mW without bias winding at 265 VAC input
- Meets Blue Angel, Energy Star, and EC requirements
- Ideal for cell-phone charger and PC standby applications

High Performance at Low Cost

- High voltage powered–ideal for charger applications
- High bandwidth provides fast turn on with no overshoot
- Current limit operation rejects line frequency ripple
- Built-in current limit and thermal protection improves safety

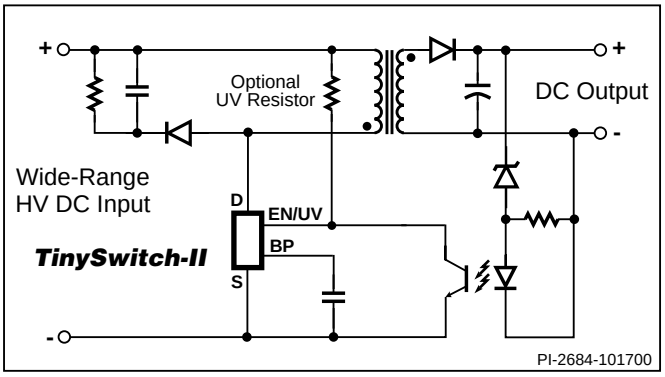

Figure 1. Typical Standby Application.

OUTPUT POWER TABLE				
PRODUCT(3)	230 VAC ±15%		85-265 VAC	
	Adapter(1)	Open Frame(2)	Adapter(1)	Open Frame(2)
TNY263P or G	5 W	7.5 W	3.7 W	4.7 W
TNY264P or G	5.5 W	9 W	4 W	6 W
TNY265P or G	8.5 W	11 W	5.5 W	7.5 W
TNY266P or G	10 W	15 W	6 W	9.5 W
TNY267P or G	13 W	19 W	8 W	12 W
TNY268P or G	16 W	23 W	10 W	15 W

Table 1. Notes: **1.** Typical continuous power in a non-ventilated enclosed adapter measured at 50 °C ambient. **2.** Maximum practical continuous power in an open frame design with adequate heat sinking, measured at 50 °C ambient (See Key Applications Considerations). **3.** Packages: P: DIP-8B, G: SMD-8B. See Part Ordering Information.

Description

TinySwitch-II integrates a 700 V power MOSFET, oscillator, high voltage switched current source, current limit and thermal shutdown circuitry onto a monolithic device. The start-up and operating power are derived directly from the voltage on the DRAIN pin, eliminating the need for a bias winding and associated circuitry. In addition, the *TinySwitch-II* devices incorporate auto-restart, line under-voltage sense, and frequency jittering. An innovative design minimizes audio frequency components in the simple ON/OFF control scheme to practically eliminate audible noise with standard taped/varnished transformer construction. The fully integrated auto-restart circuit safely limits output power during fault conditions such as output short circuit or open loop, reducing component count and secondary feedback circuitry cost. An optional line sense resistor externally programs a line under-voltage threshold, which eliminates power down glitches caused by the slow discharge of input storage capacitors present in applications such as standby supplies. The operating frequency of 132 kHz is jittered to significantly reduce both the quasi-peak and average EMI, minimizing filtering cost.

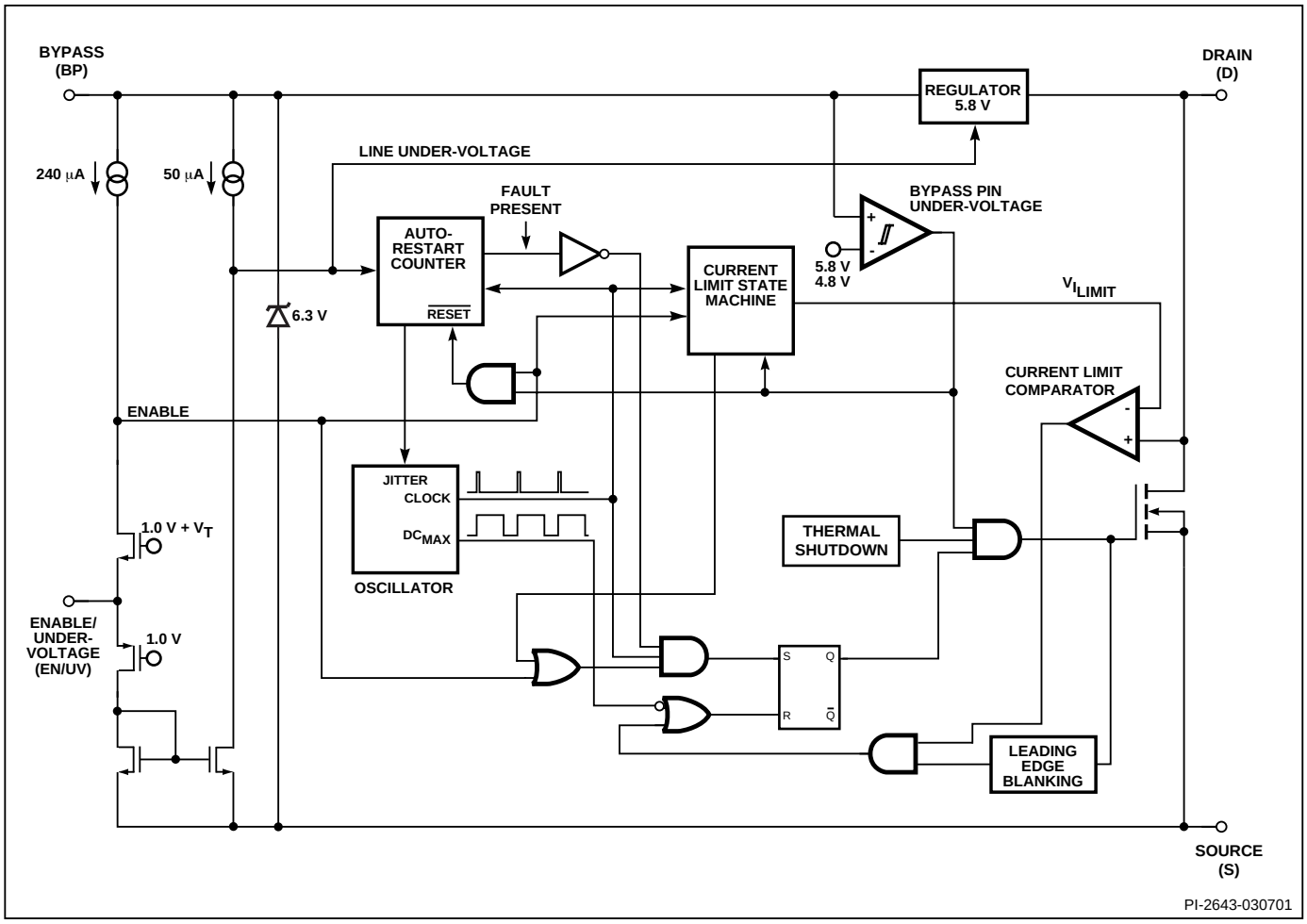

Figure 2. Functional Block Diagram.

Pin Functional Description

DRAIN (D) Pin:
Power MOSFET drain connection. Provides internal operating current for both start-up and steady-state operation.

BYPASS (BP) Pin:
Connection point for a 0.1 µF external bypass capacitor for the internally generated 5.8 V supply.

ENABLE/UNDER-VOLTAGE (EN/UV) Pin:
This pin has dual functions: enable input and line under-voltage sense. During normal operation, switching of the power MOSFET is controlled by this pin. MOSFET switching is terminated when a current greater than 240 µA is drawn from this pin. This pin also senses line under-voltage conditions through an external resistor connected to the DC line voltage. If there is no external resistor connected to this pin, *TinySwitch-II* detects its absence and disables the line under-voltage function.

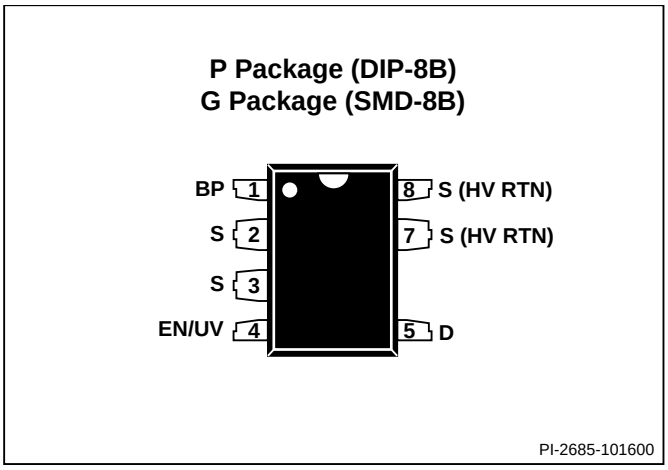

Figure 3. Pin Configuration.

SOURCE (S) Pin:
Control circuit common, internally connected to output MOSFET source.

SOURCE (HV RTN) Pin:
Output MOSFET source connection for high voltage return.

TinySwitch-II Functional Description

TinySwitch-II combines a high voltage power MOSFET switch with a power supply controller in one device. Unlike conventional PWM (pulse width modulator) controllers, *TinySwitch-II* uses a simple ON/OFF control to regulate the output voltage.

The *TinySwitch-II* controller consists of an oscillator, enable circuit (sense and logic), current limit state machine, 5.8 V regulator, BYPASS pin under-voltage circuit, over-temperature protection, current limit circuit, leading edge blanking and a 700 V power MOSFET. *TinySwitch-II* incorporates additional circuitry for line under-voltage sense, auto-restart and frequency jitter. Figure 2 shows the functional block diagram with the most important features.

Oscillator

The typical oscillator frequency is internally set to an average of 132 kHz. Two signals are generated from the oscillator: the maximum duty cycle signal (DC_{MAX}) and the clock signal that indicates the beginning of each cycle.

The *TinySwitch-II* oscillator incorporates circuitry that introduces a small amount of frequency jitter, typically 8 kHz peak-to-peak, to minimize EMI emission. The modulation rate of the frequency jitter is set to 1 kHz to optimize EMI reduction for both average and quasi-peak emissions. The frequency jitter should be measured with the oscilloscope triggered at the falling edge of the DRAIN waveform. The waveform in Figure 4 illustrates the frequency jitter of the *TinySwitch-II*.

Enable Input and Current Limit State Machine

The enable input circuit at the EN/UV pin consists of a low impedance source follower output set at 1.0 V. The current through the source follower is limited to 240 μA. When the current out of this pin exceeds 240 μA, a low logic level (disable) is generated at the output of the enable circuit. This enable circuit output is sampled at the beginning of each cycle on the rising edge of the clock signal. If high, the power MOSFET is turned on for that cycle (enabled). If low, the power MOSFET remains off (disabled). Since the sampling is done only at the beginning of each cycle, subsequent changes in the EN/UV pin voltage or current during the remainder of the cycle are ignored.

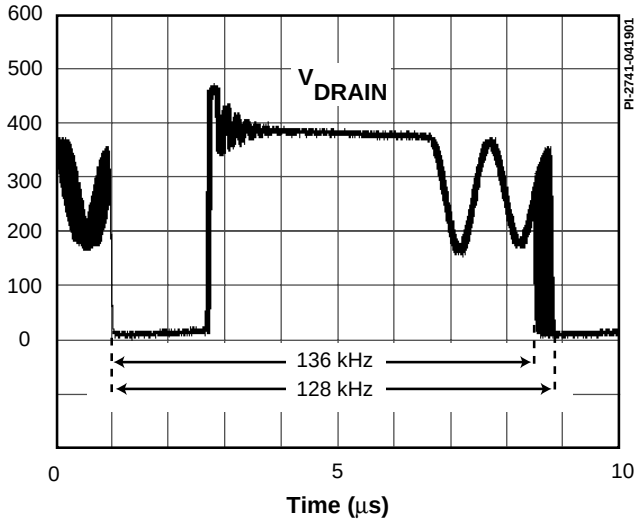

Figure 4. Frequency Jitter.

The current limit state machine reduces the current limit by discrete amounts at light loads when *TinySwitch-II* is likely to switch in the audible frequency range. The lower current limit raises the effective switching frequency above the audio range and reduces the transformer flux density, including the associated audible noise. The state machine monitors the sequence of EN/UV pin voltage levels to determine the load condition and adjusts the current limit level accordingly in discrete amounts.

Under most operating conditions (except when close to no-load), the low impedance of the source follower keeps the voltage on the EN/UV pin from going much below 1.0 V in the disabled state. This improves the response time of the optocoupler that is usually connected to this pin.

5.8 V Regulator and 6.3 V Shunt Voltage Clamp

The 5.8 V regulator charges the bypass capacitor connected to the BYPASS pin to 5.8 V by drawing a current from the voltage on the DRAIN pin whenever the MOSFET is off. The BYPASS pin is the internal supply voltage node for the *TinySwitch-II*. When the MOSFET is on, the *TinySwitch-II* operates from the energy stored in the bypass capacitor. Extremely low power consumption of the internal circuitry allows *TinySwitch-II* to operate continuously from current it takes from the DRAIN pin. A bypass capacitor value of 0.1 μF is sufficient for both high frequency decoupling and energy storage.

In addition, there is a 6.3 V shunt regulator clamping the BYPASS pin at 6.3 V when current is provided to the BYPASS pin through an external resistor. This facilitates powering of *TinySwitch-II* externally through a bias winding to decrease the no-load consumption to about 50 mW.

BYPASS Pin Under-Voltage

The BYPASS pin under-voltage circuitry disables the power MOSFET when the BYPASS pin voltage drops below 4.8 V. Once the BYPASS pin voltage drops below 4.8 V, it must rise back to 5.8 V to enable (turn-on) the power MOSFET.

Over Temperature Protection

The thermal shutdown circuitry senses the die temperature. The threshold is typically set at 135 °C with 70 °C hysteresis. When the die temperature rises above this threshold the power MOSFET is disabled and remains disabled until the die temperature falls by 70 °C, at which point it is re-enabled. A

large hysteresis of 70 °C (typical) is provided to prevent overheating of the PC board due to a continuous fault condition.

Current Limit

The current limit circuit senses the current in the power MOSFET. When this current exceeds the internal threshold (I_{LIMIT}), the power MOSFET is turned off for the remainder of that cycle. The current limit state machine reduces the current limit threshold by discrete amounts under medium and light loads.

The leading edge blanking circuit inhibits the current limit comparator for a short time (t_{LEB}) after the power MOSFET is turned on. This leading edge blanking time has been set so that current spikes caused by capacitance and secondary-side rectifier reverse recovery time will not cause premature termination of the switching pulse.

Auto-Restart

In the event of a fault condition such as output overload, output short circuit, or an open loop condition, *TinySwitch-II* enters into auto-restart operation. An internal counter clocked by the oscillator gets reset every time the EN/UV pin is pulled low. If the EN/UV pin is not pulled low for 50 ms, the power MOSFET switching is normally disabled for 850 ms (except in the case of line under-voltage condition, in which case it is disabled until the condition is removed). The auto-restart alternately enables and disables the switching of the power MOSFET until the fault condition is removed. Figure 5 illustrates auto-restart circuit operation in the presence of an output short circuit.

In the event of a line under-voltage condition, the switching of the power MOSFET is disabled beyond its normal 850 ms time until the line under-voltage condition ends.

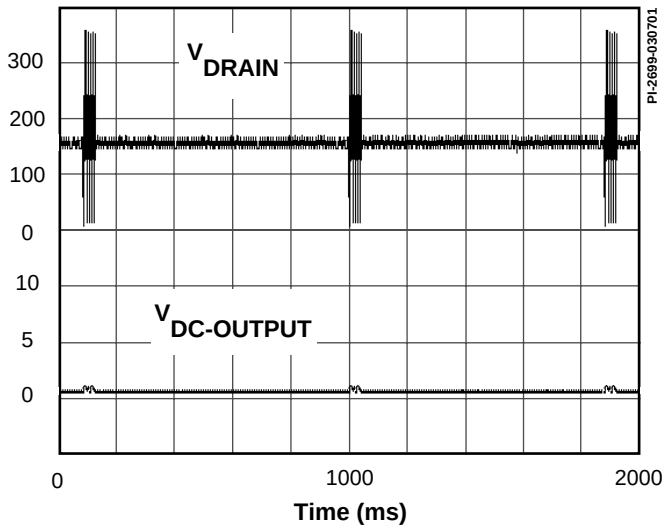

Figure 5. TinySwitch-II Auto-Restart Operation.

Line Under-Voltage Sense Circuit

The DC line voltage can be monitored by connecting an external resistor from the DC line to the EN/UV pin. During power-up or when the switching of the power MOSFET is disabled in auto-restart, the current into the EN/UV pin must exceed 49 μA to initiate switching of the power MOSFET. During power-up, this is accomplished by holding the BYPASS pin to 4.8 V while the line under-voltage condition exists. The BYPASS pin then rises from 4.8 V to 5.8 V when the line under-voltage condition goes away. When the switching of the power MOSFET is disabled in auto-restart mode and a line under-voltage condition exists, the auto-restart counter is stopped. This stretches the disable time beyond its normal 850 ms until the line under-voltage condition ends.

The line under-voltage circuit also detects when there is no external resistor connected to the EN/UV pin (less than ~ 2 μA into the pin). In this case the line under-voltage function is disabled.

TinySwitch-II Operation

TinySwitch-II devices operate in the current limit mode. When enabled, the oscillator turns the power MOSFET on at the beginning of each cycle. The MOSFET is turned off when the current ramps up to the current limit or when the DC_{MAX} limit is reached. Since the highest current limit level and frequency of a *TinySwitch-II* design are constant, the power delivered to the load is proportional to the primary inductance of the transformer and peak primary current squared. Hence, designing the supply involves calculating the primary inductance of the transformer for the maximum output power required. If the *TinySwitch-II* is appropriately chosen for the power level, the current in the calculated inductance will ramp up to current limit before the DC_{MAX} limit is reached.

Enable Function

TinySwitch-II senses the EN/UV pin to determine whether or not to proceed with the next switching cycle as described earlier. The sequence of cycles is used to determine the current limit. Once a cycle is started, it always completes the cycle (even when the EN/UV pin changes state half way through the cycle). This operation results in a power supply in which the output voltage ripple is determined by the output capacitor, amount of energy per switch cycle and the delay of the feedback.

The EN/UV pin signal is generated on the secondary by comparing the power supply output voltage with a reference voltage. The EN/UV pin signal is high when the power supply output voltage is less than the reference voltage.

In a typical implementation, the EN/UV pin is driven by an optocoupler. The collector of the optocoupler transistor is connected to the EN/UV pin and the emitter is connected to the

SOURCE pin. The optocoupler LED is connected in series with a Zener diode across the DC output voltage to be regulated. When the output voltage exceeds the target regulation voltage level (optocoupler LED voltage drop plus Zener voltage), the optocoupler LED will start to conduct, pulling the EN/UV pin low. The Zener diode can be replaced by a TL431 reference circuit for improved accuracy.

ON/OFF Operation with Current Limit State Machine

The internal clock of the *TinySwitch-II* runs all the time. At the beginning of each clock cycle, it samples the EN/UV pin to decide whether or not to implement a switch cycle, and based on the sequence of samples over multiple cycles, it determines the appropriate current limit. At high loads, when the EN/UV pin is high (less than 240 μA out of the pin), a switching cycle with the full current limit occurs. At lighter loads, when EN/UV is high, a switching cycle with a reduced current limit occurs.

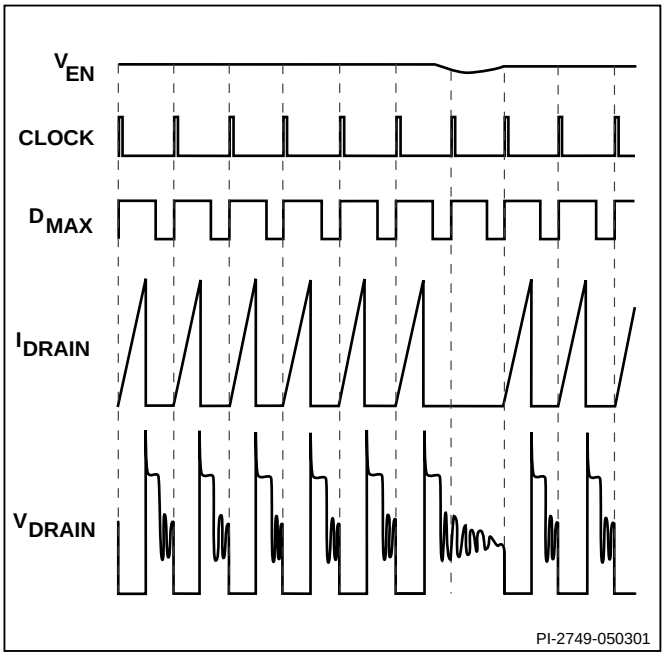

Figure 6. TinySwitch-II Operation at Near Maximum Loading.

At near maximum load, *TinySwitch-II* will conduct during nearly all of its clock cycles (Figure 6). At slightly lower load, it will "skip" additional cycles in order to maintain voltage regulation at the power supply output (Figure 7). At medium loads, cycles will be skipped and the current limit will be reduced (Figure 8). At very light loads, the current limit will be reduced even further (Figure 9). Only a small percentage of cycles will occur to satisfy the power consumption of the power supply.

The response time of the *TinySwitch-II* ON/OFF control scheme is very fast compared to normal PWM control. This provides tight regulation and excellent transient response.

Power Up/Down

The *TinySwitch-II* requires only a 0.1 μF capacitor on the BYPASS pin. Because of its small size, the time to charge this capacitor is kept to an absolute minimum, typically 0.6 ms. Due to the fast nature of the ON/OFF feedback, there is no overshoot at the power supply output. When an external resistor (2 MΩ) is connected from the positive DC input to the EN/UV pin, the power MOSFET switching will be delayed during power-up until the DC line voltage exceeds the threshold (100 V). Figures 10 and 11 show the power-up timing waveform of *TinySwitch-II* in

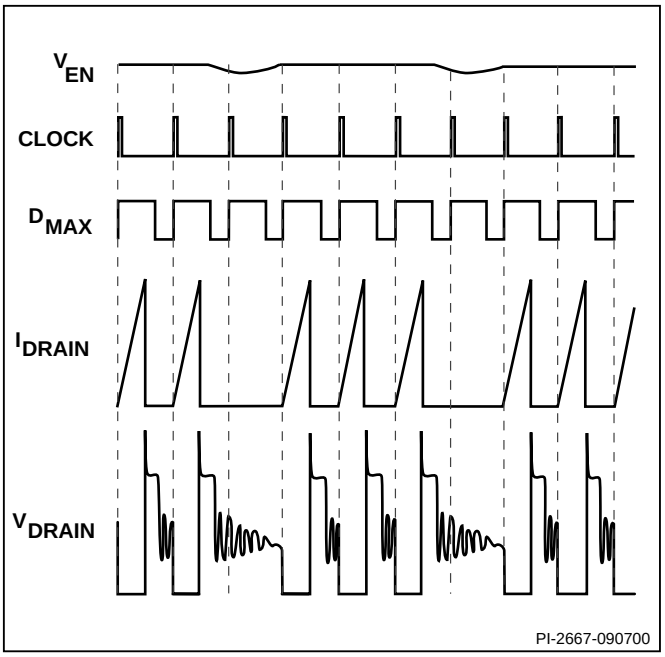

Figure 7. TinySwitch-II Operation at Moderately Heavy Loading.

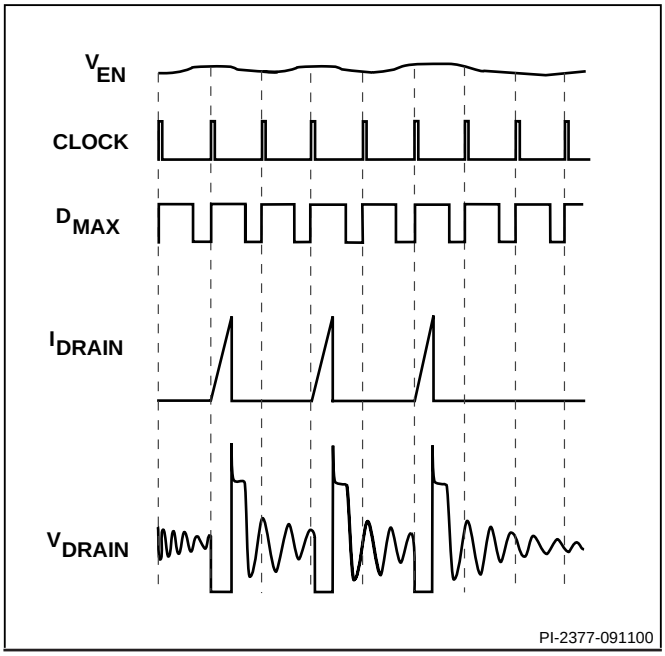

Figure 8. TinySwitch-II Operation at Medium Loading.

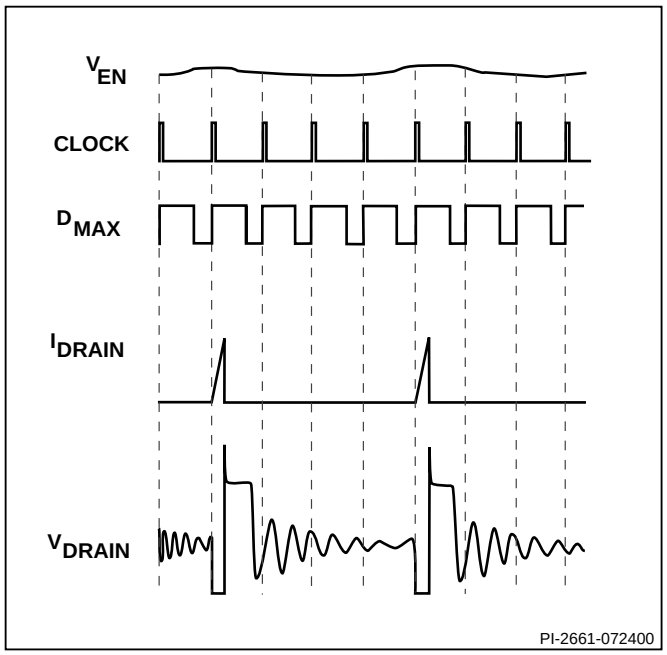

Figure 9. TinySwitch-II Operation at Very Light Load.

applications with and without an external resistor (2 MΩ) connected to the EN/UV pin.

During power-down, when an external resistor is used, the power MOSFET will switch for 50 ms after the output loses regulation. The power MOSFET will then remain off without any glitches since the under-voltage function prohibits restart when the line voltage is low.

Figure 12 illustrates a typical power-down timing waveform of *TinySwitch-II*. Figure 13 illustrates a very slow power-down timing waveform of *TinySwitch-II* as in standby applications.

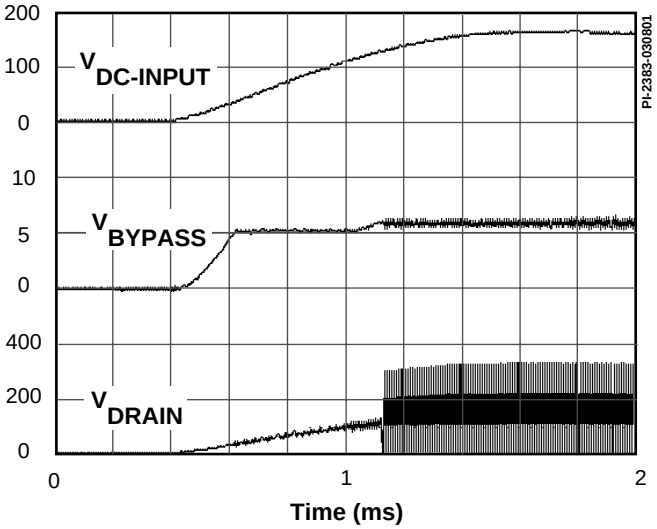

Figure 10. TinySwitch-II Power-up with Optional External UV Resistor (2 MΩ) Connected to EN/UV Pin.

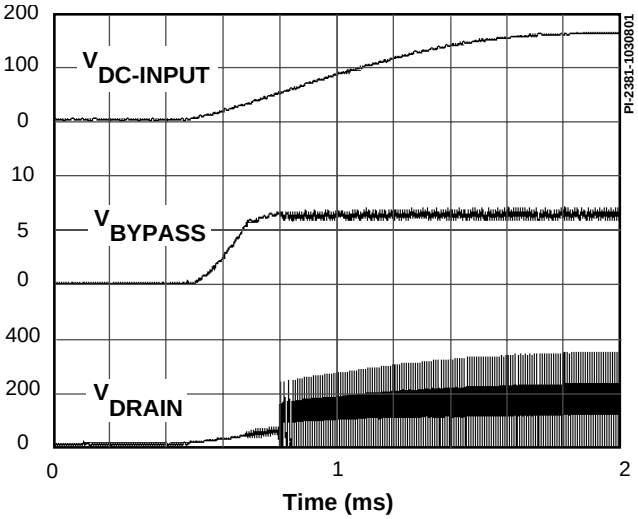

Figure 11. TinySwitch-II Power-up without Optional External UV Resistor Connected to EN/UV Pin.

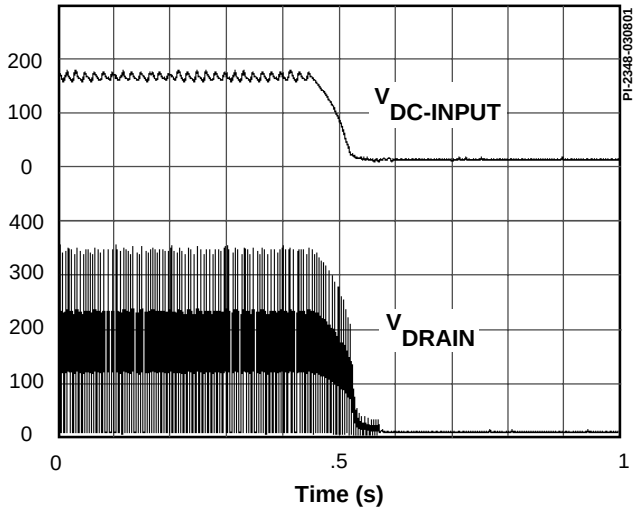

Figure 12. Normal Power-down Timing (without UV).

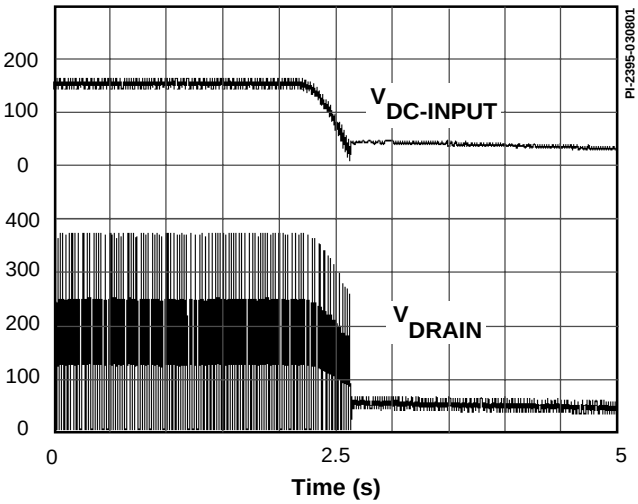

Figure 13. Slow Power-down Timing with Optional External (2 MΩ) UV Resistor Connected to EN/UV Pin.

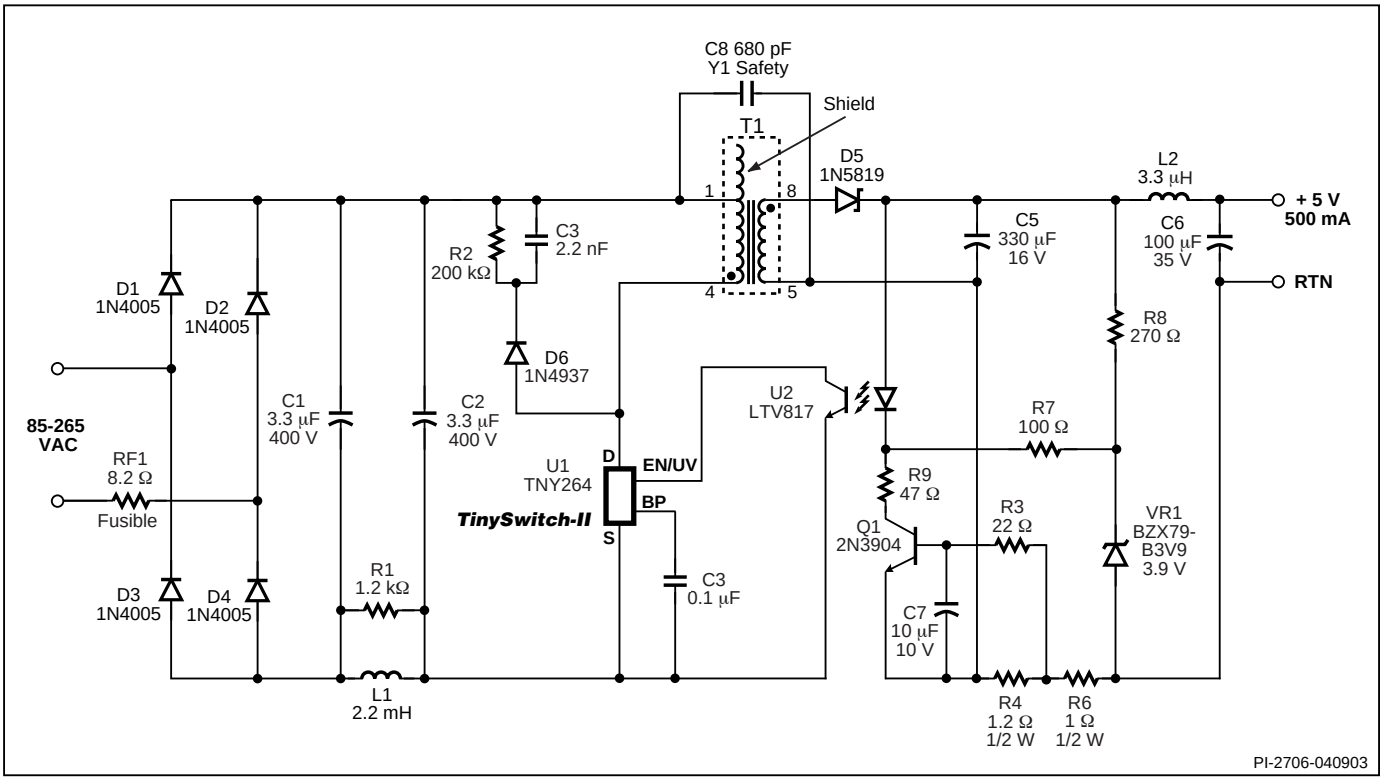

Figure 14. 2.5 W Constant Voltage, Constant Current Battery Charger with Universal Input (85-265 VAC).

The external resistor (2 MΩ) is connected to the EN/UV pin in this case to prevent unwanted restarts.

The *TinySwitch-II* does not require a bias winding to provide power to the chip, because it draws the power directly from the DRAIN pin (see Functional Description above). This has two main benefits. First, for a nominal application, this eliminates the cost of a bias winding and associated components. Secondly, for battery charger applications, the current-voltage characteristic often allows the output voltage to fall close to zero volts while still delivering power. This type of application normally requires a forward-bias winding which has many more associated components. With *TinySwitch-II*, neither are necessary. For applications that require a very low no-load power consumption (50 mW), a resistor from a bias winding to the BYPASS pin can provide the power to the chip. The minimum recommended current supplied is 750 µA. The BYPASS pin in this case will be clamped at 6.3 V. This method will eliminate the power draw from the DRAIN pin, thereby reducing the no-load power consumption and improving full-load efficiency.

Current Limit Operation

Each switching cycle is terminated when the DRAIN current reaches the current limit of the *TinySwitch-II*. Current limit operation provides good line ripple rejection and relatively constant power delivery independent of input voltage.

BYPASS Pin Capacitor

The BYPASS pin uses a small 0.1 µF ceramic capacitor for decoupling the internal power supply of the *TinySwitch-II*.

Application Examples

The *TinySwitch-II* is ideal for low cost, high efficiency power supplies in a wide range of applications such as cellular phone chargers, PC standby, TV standby, AC adapters, motor control, appliance control and ISDN or a DSL network termination. The 132 kHz operation allows the use of a low cost EE13 or EF12.6 core transformer while still providing good efficiency. The frequency jitter in *TinySwitch-II* makes it possible to use a single inductor (or two small resistors for under 3 W applications if lower efficiency is acceptable) in conjunction with two input capacitors for input EMI filtering. The auto-restart function removes the need to oversize the output diode for short circuit conditions allowing the design to be optimized for low cost and maximum efficiency. In charger applications, it eliminates the need for a second optocoupler and Zener diode for open loop fault protection. Auto-restart also saves the cost of adding a fuse or increasing the power rating of the current sense resistors to survive reverse battery conditions. For applications requiring under-voltage lock out (UVLO), such as PC standby, the *TinySwitch-II* eliminates several components and saves cost. *TinySwitch-II* is well suited for applications that require constant voltage and constant current output. As *TinySwitch-II*

is always powered from the input high voltage, it therefore does not rely on bias winding voltage. Consequently this greatly simplifies designing chargers that must work down to zero volts on the output.

2.5 W CV/CC Cell-Phone Charger

As an example, Figure 14 shows a TNY264 based 5 V, 0.5 A, cellular phone charger operating over a universal input range (85 VAC to 265 VAC). The inductor (L1) forms a π-filter in conjunction with C1 and C2. The resistor R1 damps resonances in the inductor L1. Frequency jittering operation of *TinySwitch-II* allows the use of a simple π-filter described above in combination with a single low value Y1-capacitor (C8) to meet worldwide conducted EMI standards. The addition of a shield winding in the transformer allows conducted EMI to be met even with the output capacitively earthed (which is the worst case condition for EMI). The diode D6, capacitor C3 and resistor R2 comprise the clamp circuit, limiting the leakage inductance turn-off voltage spike on the *TinySwitch-II* DRAIN pin to a safe value. The output voltage is determined by the sum of the optocoupler U2 LED forward drop (~1 V), and Zener diode VR1 voltage. Resistor R8 maintains a bias current through the Zener diode to ensure it is operated close to the Zener test current.

A simple constant current circuit is implemented using the V_{BE} of transistor Q1 to sense the voltage across the current sense resistor R4. When the drop across R4 exceeds the V_{BE} of transistor Q1, it turns on and takes over control of the loop by driving the optocoupler LED. Resistor R6 assures sufficient voltage to keep the control loop in operation down to zero volts at the output. With the output shorted, the drop across R4 and R6 (~1.2 V) is sufficient to keep the Q1 and LED circuit active. Resistors R7 and R9 limit the forward current that could be drawn through VR1 by Q1 under output short circuit conditions, due to the voltage drop across R4 and R6.

10 and 15 W Standby Circuits

Figures 15 and 16 show examples of circuits for standby applications. They both provide two outputs: an isolated 5 V and a 12 V primary referenced output. The first, using TNY266P, provides 10 W, and the second, using TNY267P, 15 W of output power. Both operate from an input range of 140 VDC to 375 VDC, corresponding to a 230 VAC or 100/115 VAC with doubler input. The designs take advantage of the line under-voltage detect, auto-restart and higher switching frequency of *TinySwitch-II*. Operation at 132 kHz allows the use of a smaller and lower cost transformer core, EE16 for 10 W and EE22 for 15 W. The removal of pin 6 from the 8 pin DIP *TinySwitch-II* packages provides a large creepage distance which improves reliability in high pollution environments such as fan cooled power supplies.

Capacitor C1 provides high frequency decoupling of the high voltage DC supply, only necessary if there is a long trace length from the DC bulk capacitors of the main supply. The line sense resistors R2 and R3 sense the DC input voltage for line under-voltage. When the AC is turned off, the under-voltage detect feature of the *TinySwitch-II* prevents auto-restart glitches at the output caused by the slow discharge of large storage capacitance in the main converter. This is achieved by preventing the *TinySwitch-II* from switching when the input voltage goes below a level needed to maintain output regulation, and keeping it off until the input voltage goes above the under-voltage threshold, when the AC is turned on again. With R2 and R3, giving a combined value of 2 MΩ, the power up under-voltage threshold is set at 200 VDC, slightly below the lowest required operating DC input voltage, for start-up at 170 VAC, with doubler. This feature saves several components needed to implement the glitch-free turn-off compared with discrete or *TOPSwitch-II* based designs. During turn-on the rectified DC input voltage needs to exceed 200 V under-voltage threshold for the power supply to start operation. But, once the power supply is on it will continue to operate down to 140 V rectified DC input voltage to provide the required hold up time for the standby output.

The auxiliary primary side winding is rectified and filtered by D2 and C2 to create a 12 V primary bias output voltage for the main power supply primary controller. In addition, this voltage is used to power the *TinySwitch-II* via R4. Although not necessary for operation, supplying the *TinySwitch-II* externally reduces the device quiescent dissipation by disabling the internal drain derived current source normally used to keep the BYPASS pin capacitor (C3) charged. An R4 value of 10 kΩ provides 600 μA into the BYPASS pin, which is slightly in excess of the current consumption of *TinySwitch-II*. The excess current is safely clamped by an on-chip active Zener diode to 6.3 V.

The secondary winding is rectified and filtered by D3 and C6. For a 15 W design an additional output capacitor, C7, is required due to the larger secondary ripple currents compared to the 10 W standby design. The auto-restart function limits output current during short circuit conditions, removing the need to over rate D3. Switching noise filtering is provided by L1 and C8. The 5 V output is sensed by U2 and VR1. R5 is used to ensure that the Zener diode is biased at its test current and R6 centers the output voltage at 5 V.

In many cases the Zener regulation method provides sufficient accuracy (typically ± 6% over a 0 °C to 50 °C temperature range). This is possible because *TinySwitch-II* limits the dynamic range of the optocoupler LED current, allowing the Zener diode to operate at near constant bias current. However, if higher accuracy is required, a TL431 precision reference IC may be used to replace VR1.

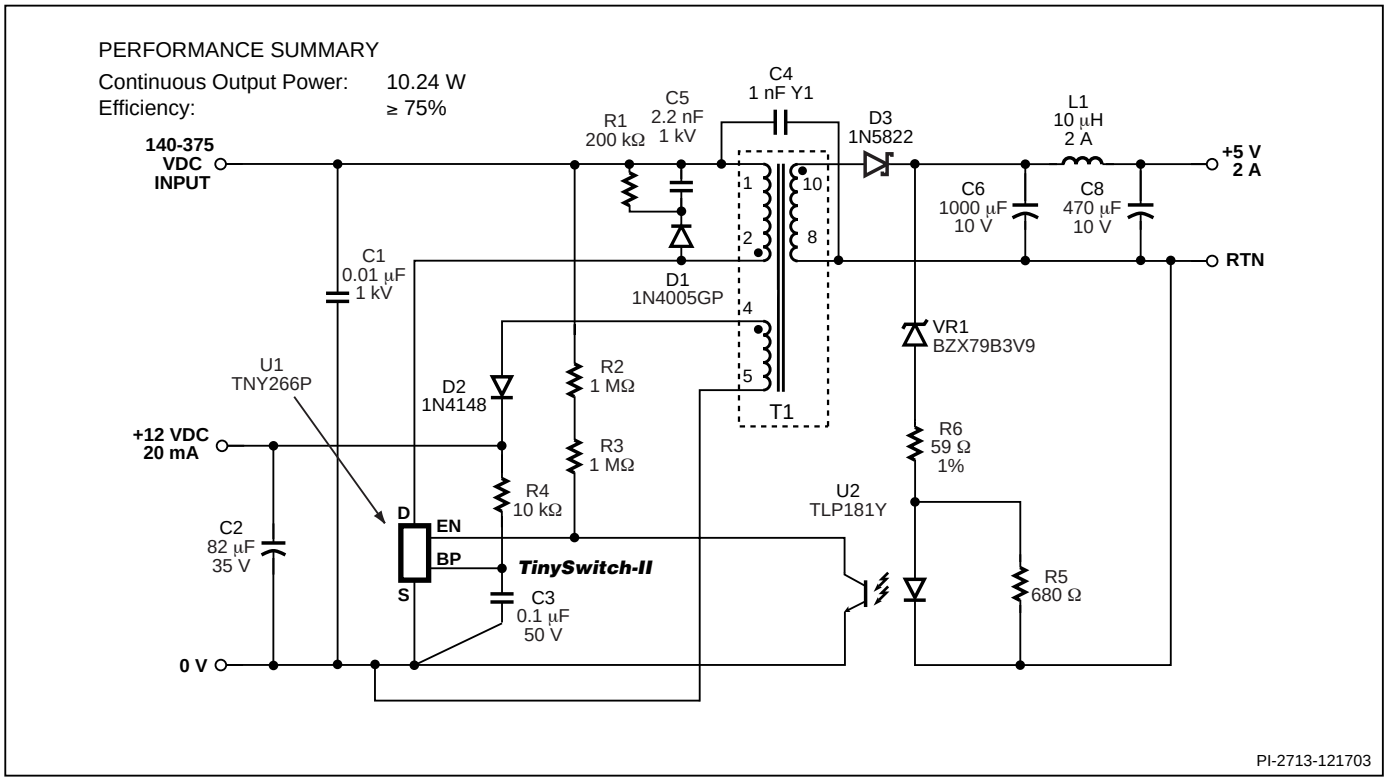

Figure 15. 10 W Standby Supply.

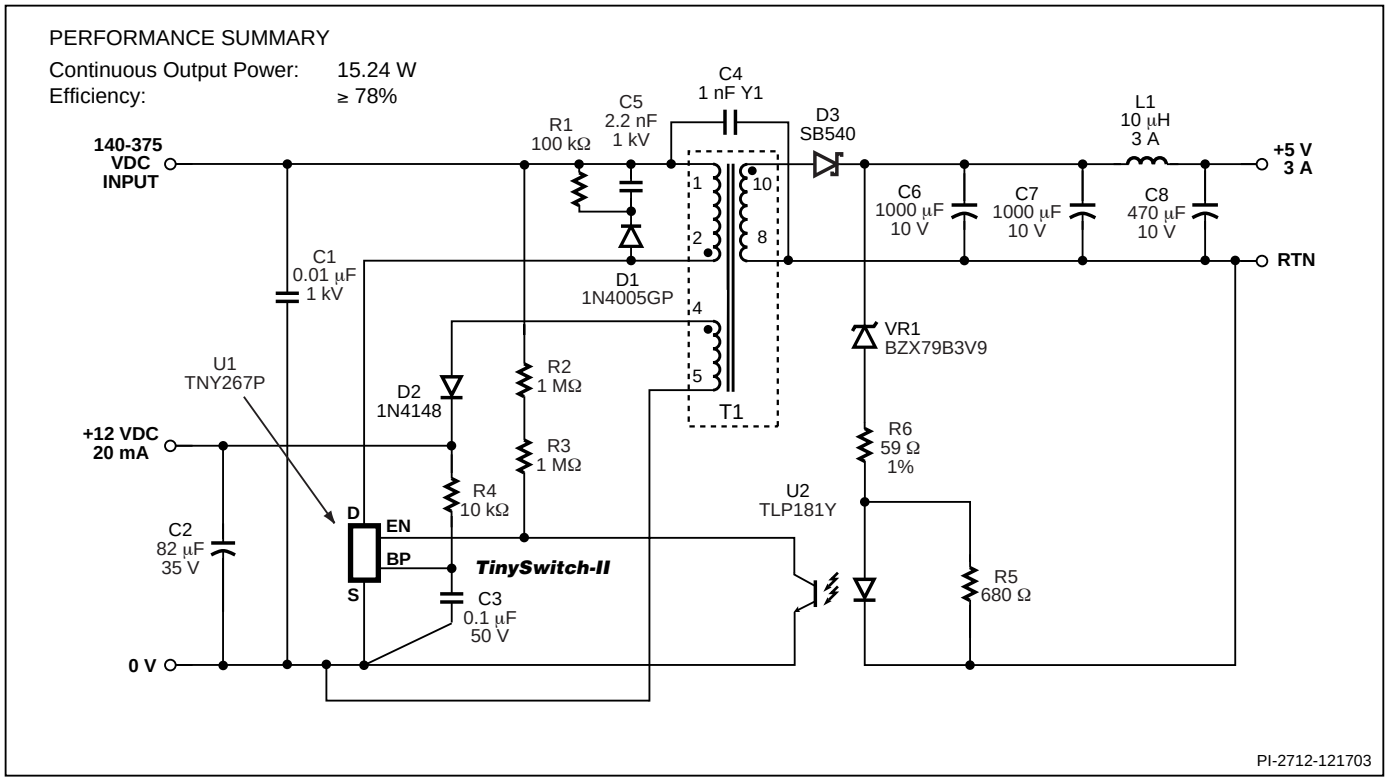

Figure 16. 15 W Standby Supply.

Key Application Considerations

TinySwitch-II vs. *TinySwitch*

Table 2 compares the features and performance differences between the TNY254 device of the *TinySwitch* family with the *TinySwitch-II* family of devices. Many of the new features eliminate the need for or reduce the cost of circuit components. Other features simplify the design and enhance performance.

Design

Output Power

Table 1 (front page) shows the practical maximum continuous output power levels that can be obtained under the following conditions:

1. The minimum DC input voltage is 90 V or higher for 85 VAC input, or 240 V or higher for 230 VAC input or 115 VAC input with a voltage doubler. This corresponds to a filter capacitor of 3 μF/W for universal input and 1 μF/W for 230 VAC or 115 VAC with doubler input.

Function	*TinySwitch* TNY254	*TinySwitch-II* TNY263-268	*TinySwitch-II* Advantages
Switching Frequency and Tolerance Temperature Variation (0 - 100 °C)**	44 kHz ±10% (@25 °C) +8%	132 kHz ±6% (@25 °C) +2%	• Smaller transformer for low cost • Ease of design • Manufacturability • Optimum design for lower cost
Active Frequency Jitter	N/A*	±4 kHz	• Lower EMI minimizing filter component costs
Transformer Audible Noise Reduction	N/A*	Yes - built into controller	• Practically eliminates audible noise with ordinary dip varnished transformer – no special construction or gluing required
Line UV Detect	N/A*	Single resistor programmable	• Prevents power on/off glitches
Current Limit Tolerance Temperature Variation (0 - 100 °C)**	± 11% (@25 °C) -8%	± 7% (@25 °C) 0%	• Increases power capability and simplifies design for high volume manufacturing
Auto-Restart	N/A*	6% effective on-time	• Limits output short-circuit current to less than full load current - No output diode size penalty. • Protects load in open loop fault conditions - No additional components required
BYPASS Pin Zener Clamp	N/A*	Internally clamped to 6.3 V	• Allows *TinySwitch-II* to be powered from a low voltage bias winding to improve efficiency and to reduce on-chip power dissipation
DRAIN Creepage at Package	0.037” / 0.94 mm	0.137” / 3.48 mm	• Greater immunity to arcing as a result of dust, debris or other contaminants build-up

**Not available. ** See typical performance curves.*

Table 2. Comparison Between TinySwitch and TinySwitch-II.

2. A secondary output of 5 V with a Schottky rectifier diode.

3. Assumed efficiency of 77% (TNY267 & TNY268), 75% (TNY265 & TNY266) and 73% (TNY263 & TNY264).

4. The parts are board mounted with SOURCE pins soldered to sufficient area of copper to keep the die temperature at or below 100 °C.

In addition to the thermal environment (sealed enclosure, ventilated, open frame, etc.), the maximum power capability of *TinySwitch-II* in a given application depends on transformer core size and design (continuous or discontinuous), efficiency, minimum specified input voltage, input storage capacitance, output voltage, output diode forward drop, etc., and can be different from the values shown in Table 1.

Audible Noise
The *TinySwitch-II* practically eliminates any transformer audio noise using simple ordinary varnished transformer construction. No gluing of the cores is needed. The audio noise reduction is accomplished by the *TinySwitch-II* controller reducing the current limit in discrete steps as the load is reduced. This minimizes the flux density in the transformer when switching at audio frequencies.

Worst Case EMI & Efficiency Measurement
Since identical *TinySwitch-II* supplies may operate at several different frequencies under the same load and line conditions, care must be taken to ensure that measurements are made under worst case conditions. When measuring efficiency or EMI verify that the *TinySwitch-II* is operating at maximum frequency and that measurements are made at both low and high line input voltages to ensure the worst case result is obtained.

Layout

Single Point Grounding
Use a single point ground connection at the SOURCE pin for the BYPASS pin capacitor and the Input Filter Capacitor (see Figure 17).

Primary Loop Area
The area of the primary loop that connects the input filter capacitor, transformer primary and *TinySwitch-II* together should be kept as small as possible.

Primary Clamp Circuit
A clamp is used to limit peak voltage on the DRAIN pin at turn-off. This can be achieved by using an RCD clamp (as shown in Figure 14). A Zener and diode clamp (200 V) across the primary or a single 550 V Zener clamp from DRAIN to SOURCE can also be used. In all cases care should be taken to minimize the circuit path from the clamp components to the transformer and *TinySwitch-II*.

Thermal Considerations
Copper underneath the *TinySwitch-II* acts not only as a single point ground, but also as a heatsink. The hatched areas shown in Figure 17 should be maximized for good heat sinking of *TinySwitch-II* and the same applies to the output diode.

EN/UV pin
If a line under-voltage detect resistor is used then the resistor should be mounted as close as possible to the EN/UV pin to minimize noise pick up.

The voltage rating of a resistor should be considered for the under-voltage detect (Figure 15: R2, R3) resistors. For 1/4 W resistors, the voltage rating is typically 200 V continuous, whereas for 1/2 W resistors the rating is typically 400 V continuous.

Y-Capacitor
The placement of the Y-capacitor should be directly from the primary bulk capacitor positive rail to the common/return terminal on the secondary side. Such placement will maximize the EMI benefit of the Y-capacitor and avoid problems in common-mode surge testing.

Optocoupler
It is important to maintain the minimum circuit path from the optocoupler transistor to the *TinySwitch-II* EN/UV and SOURCE pins to minimize noise coupling.

The EN/UV pin connection to the optocoupler should be kept to an absolute minimum (less than 12.7 mm or 0.5 in.), and this connection should be kept away from the DRAIN pin (minimum of 5.1 mm or 0.2 in.).

Output Diode
For best performance, the area of the loop connecting the secondary winding, the Output Diode and the Output Filter Capacitor, should be minimized. See Figure 17 for optimized layout. In addition, sufficient copper area should be provided at the anode and cathode terminals of the diode for adequate heatsinking.

Input and Output Filter Capacitors
There are constrictions in the traces connected to the input and output filter capacitors. These constrictions are present for two reasons. The first is to force all the high frequency currents to flow through the capacitor (if the trace were wide then it could flow around the capacitor). Secondly, the constrictions minimize the heat transferred from the *TinySwitch-II* to the input filter capacitor and from the secondary diode to the output filter capacitor. The common/return (the negative output terminal in Figure 17) terminal of the output filter capacitor should be connected with a short, low impedance path to the secondary winding. In addition, the common/return output connection should be taken directly from the secondary winding pin and not from the Y-capacitor connection point.

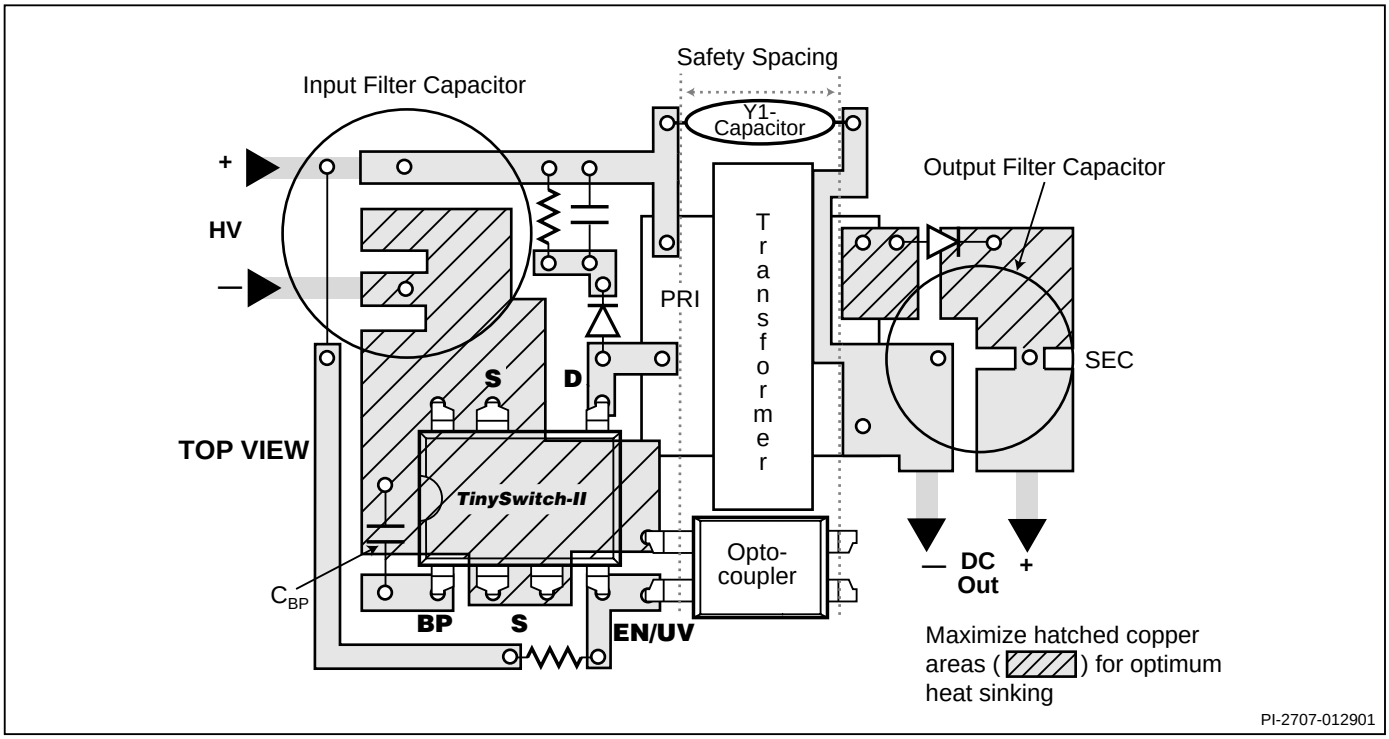

Figure 17. Recommended Circuit Board Layout for TinySwitch-II with Under-Voltage Lock Out Resistor.

PC Board Cleaning

Power Integrations does not recommend the use of "no clean" flux.

For the most up-to-date information visit the PI Web site at: *www.powerint.com*

ABSOLUTE MAXIMUM RATINGS[1]

DRAIN Voltage ..... - 0.3 V to 700 V
Peak DRAIN Current (TNY263) .....400 mA
Peak DRAIN Current (TNY264) .....400 mA
Peak DRAIN Current (TNY265) .....440 mA
Peak DRAIN Current (TNY266) .....560 mA
Peak DRAIN Current (TNY267) .....720 mA
Peak DRAIN Current (TNY268) .....880 mA
EN/UV Voltage ..... - 0.3 V to 9 V
EN/UV Current .....100 mA
BYPASS Voltage ..... -0.3 V to 9 V
Storage Temperature ..... -65 to 150 °C
Operating Junction Temperature[2] ..... -40 to 150 °C
Lead Temperature[3] ..... 260 °C

Notes:
1. All voltages referenced to SOURCE, T_A = 25 °C.
2. Normally limited by internal circuitry.
3. 1/16" from case for 5 seconds.

THERMAL IMPEDANCE

Thermal Impedance: P/G Package:
(θ_{JA}) ..... 70°C/W[2]; 60 °C/W[3]
(θ_{JC})[1] ..... 11 °C/W

Notes:
1. Measured on the SOURCE pin close to plastic interface.
2. Soldered to 0.36 sq. inch (232 mm^2), 2 oz. (610 g/m^2) copper clad.
3. Soldered to 1 sq. inch (645 mm^2), 2 oz. (610 g/m^2) copper clad.

Parameter	Symbol	Conditions SOURCE = 0 V; T_J = -40 to 125 °C See Figure 18 (Unless Otherwise Specified)		Min	Typ	Max	Units
CONTROL FUNCTIONS							
Output Frequency	f_{OSC}	T_J = 25 °C See Figure 4	Average	124	132	140	kHz
			Peak-Peak Jitter		8		
Maximum Duty Cycle	DC_{MAX}	S1 Open		62	65	68	%
EN/UV Pin Turnoff Threshold Current	I_{DIS}	T_J = -40 °C to 125 °C		-300	-240	-170	µA
EN/UV Pin Voltage	V_{EN}	$I_{EN/UV}$ = -125 µA		0.4	1.0	1.5	V
		$I_{EN/UV}$ = 25 µA		1.3	2.3	2.7	
DRAIN Supply Current	I_{S1}	$V_{EN/UV}$ = 0 V			430	500	µA
	I_{S2}	EN/UV Open (MOSFET Switching) See Note A, B	TNY263		200	250	µA
			TNY264		225	270	
			TNY265		245	295	
			TNY266		265	320	
			TNY267		315	380	
			TNY268		380	460	
BYPASS Pin Charge Current	I_{CH1}	V_{BP} = 0 V, T_J = 25 °C See Note C, D	TNY263-264	-5.5	-3.3	-1.8	mA
			TNY265-268	-7.5	-4.6	-2.5	
	I_{CH2}	V_{BP} = 4 V, T_J = 25 °C See Note C, D	TNY263-264	-3.8	-2.0	-1.0	
			TNY265-268	-4.5	-3.0	-1.5	

Parameter	Symbol	Conditions SOURCE = 0 V; T_J = -40 to 125 °C See Figure 18 (Unless Otherwise Specified)		Min	Typ	Max	Units
CONTROL FUNCTIONS (cont.)							
BYPASS Pin Voltage	V_{BP}	See Note C		5.6	5.85	6.15	V
BYPASS Pin Voltage Hysteresis	V_{BPH}			0.80	0.95	1.20	V
EN/UV Pin Line Under-voltage Threshold	I_{LUV}	T_J = 25 °C		44	49	54	µA
CIRCUIT PROTECTION							
Current Limit	I_{LIMIT}	TNY263 T_J = 25 °C	di/dt = 42 mA/µs See Note E	195	210	225	mA
		TNY264 T_J = 25 °C	di/dt = 50 mA/µs See Note E	233	250	267	
		TNY265 T_J = 25 °C	di/dt = 55 mA/µs See Note E	255	275	295	
		TNY266 T_J = 25 °C	di/dt = 70 mA/µs See Note E	325	350	375	
		TNY267 T_J = 25 °C	di/dt = 90 mA/µs See Note E	419	450	481	
		TNY268 T_J = 25 °C	di/dt = 110 mA/µs See Note E	512	550	588	
Initial Current Limit	I_{INIT}	See Figure 21 T_J = 25 °C		0.65 x $I_{LIMIT\ (MIN)}$			mA
Leading Edge Blanking Time	t_{LEB}	T_J = 25 °C See Note F		170	215		ns
Current Limit Delay	t_{ILD}	T_J = 25 °C See Note F, G			150		ns
Thermal Shutdown Temperature				125	135	150	°C
Thermal Shutdown Hysteresis					70		°C

Parameter	Symbol	Conditions SOURCE = 0 V; T_J = -40 to 125 °C See Figure 18 (Unless Otherwise Specified)		Min	Typ	Max	Units
OUTPUT							
ON-State Resistance	$R_{DS(ON)}$	TNY263 I_D = 21 mA	T_J = 25 °C		33	38	Ω
			T_J = 100 °C		50	57	
		TNY264 I_D = 25 mA	T_J = 25 °C		28	32	
			T_J = 100 °C		42	48	
		TNY265 I_D = 28 mA	T_J = 25 °C		19	22	
			T_J = 100 °C		29	33	
		TNY266 I_D = 35 mA	T_J = 25 °C		14	16	
			T_J = 100 °C		21	24	
		TNY267 I_D = 45 mA	T_J = 25 °C		7.8	9.0	
			T_J = 100 °C		11.7	13.5	
		TNY268 I_D = 55 mA	T_J = 25 °C		5.2	6.0	
			T_J = 100 °C		7.8	9.0	
OFF-State Drain Leakage Current	I_{DSS}	V_{BP} = 6.2 V, $V_{EN/UV}$ = 0 V, V_{DS} = 560 V, T_J = 125 °C	TNY263-266			50	μA
			TNY267 TNY268			100	
Breakdown Voltage	BV_{DSS}	V_{BP} = 6.2 V, $V_{EN/UV}$ = 0 V, I_{DS} = 100 μA, T_J = 25 °C		700			V
Rise Time	t_R	Measured in a Typical Flyback Converter Application			50		ns
Fall Time	t_F				50		ns
Drain Supply Voltage				50			V
Output EN/UV Delay	$t_{EN/UV}$	See Figure 20				10	μs
Output Disable Setup Time	t_{DST}				0.5		μs
Auto-Restart ON-Time	t_{AR}	T_J = 25 °C See Note H			50		ms
Auto-Restart Duty Cycle	DC_{AR}				5.6		%

NOTES:

A. Total current consumption is the sum of I_{S1} and I_{DSS} when EN/UV pin is shorted to ground (MOSFET not switching) and the sum of I_{S2} and I_{DSS} when EN/UV pin is open (MOSFET switching).

B Since the output MOSFET is switching, it is difficult to isolate the switching current from the supply current at the DRAIN. An alternative is to measure the BYPASS pin current at 6.1 V.

C. BYPASS pin is not intended for sourcing supply current to external circuitry.

D. See typical performance characteristics section for BYPASS pin start-up charging waveform.

E. For current limit at other di/dt values, refer to Figure 25.

F. This parameter is derived from characterization.

G. This parameter is derived from the change in current limit measured at 1X and 4X of the di/dt shown in the I_{LIMIT} specification.

H. Auto-restart on time has the same temperature characteristics as the oscillator (inversely proportional to frequency).

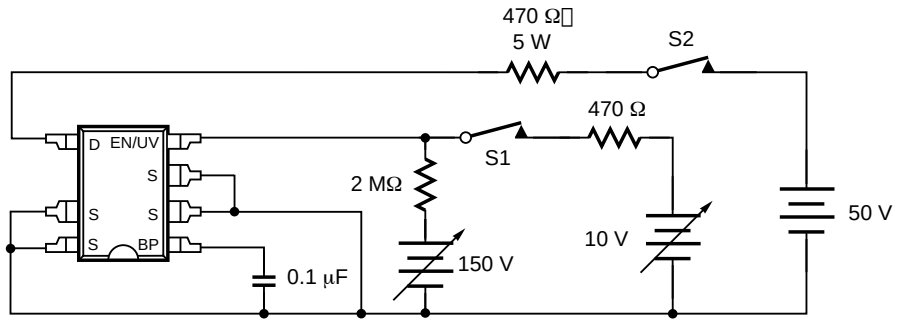

NOTE: This test circuit is not applicable for current limit or output characteristic measurements.

PI-2686-101700

Figure 18. TinySwitch-II General Test Circuit.

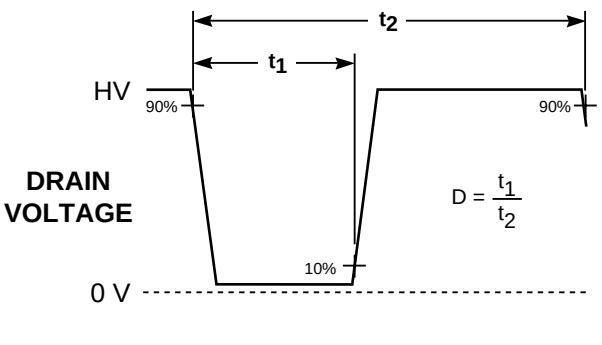

PI-2048-050798

Figure 19. TinySwitch-II Duty Cycle Measurement.

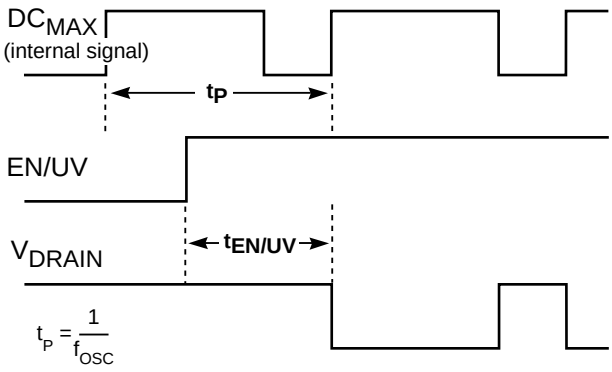

PI-2364-012699

Figure 20. TinySwitch-II Output Enable Timing.

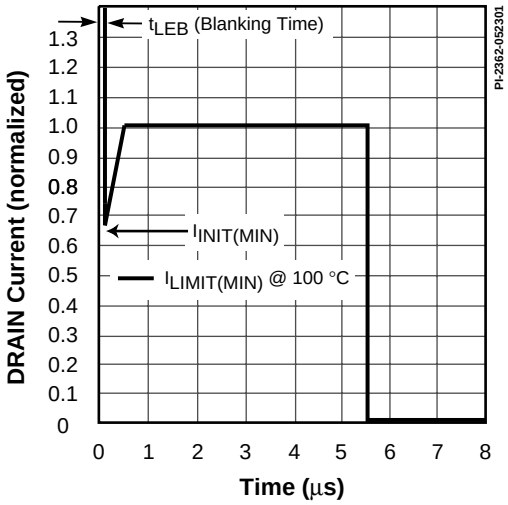

Figure 21. Current Limit Envelope.

Typical Performance Characteristics

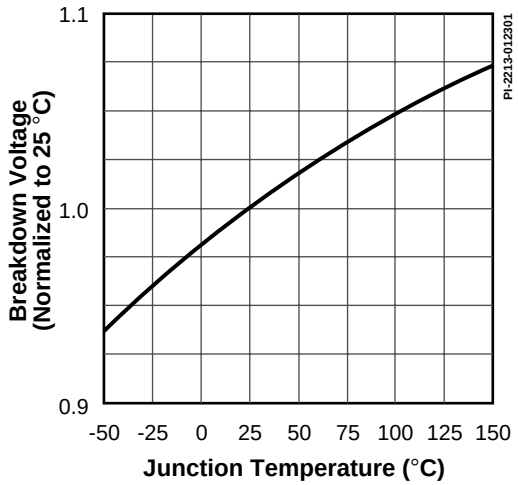

Figure 22. Breakdown vs. Temperature.

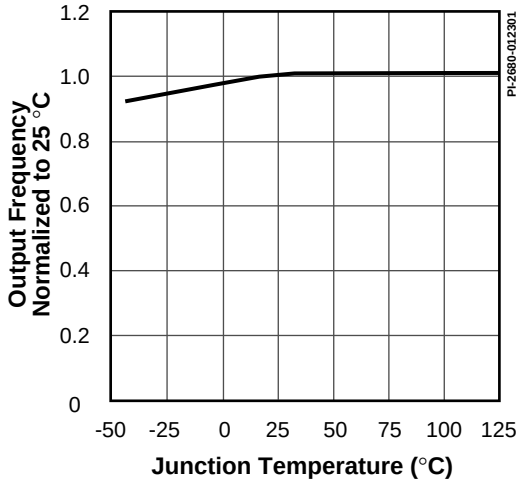

Figure 23. Frequency vs. Temperature.

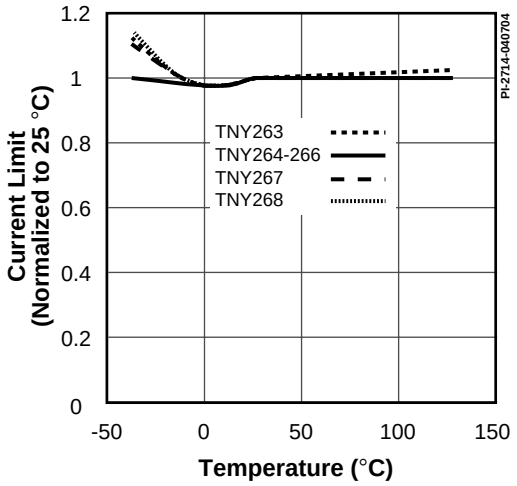

Figure 24. Current Limit vs. Temperature.

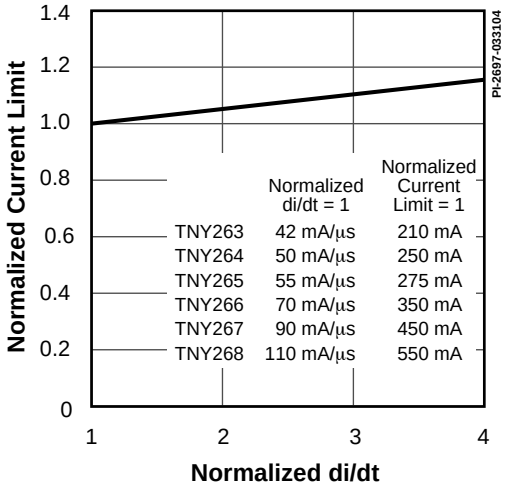

Figure 25. Current Limit vs. di/dt.

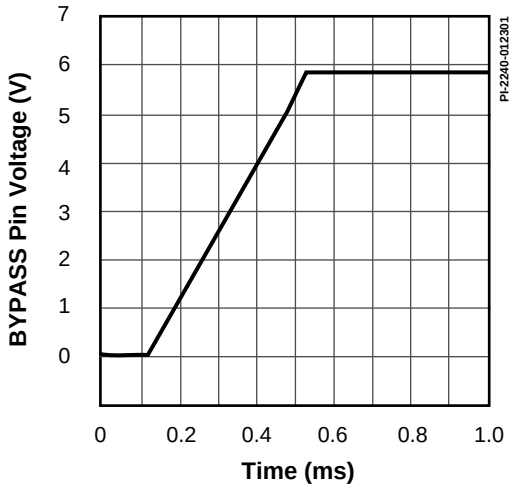

Figure 26. Bypass Pin Start-up Waveform.

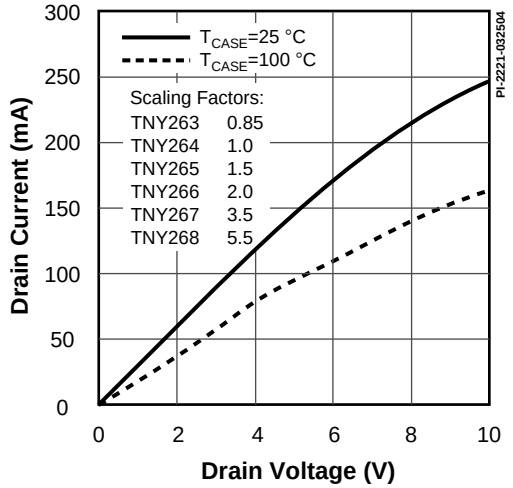

Figure 27. Output Characteristic.

Typical Performance Characteristics (cont.)

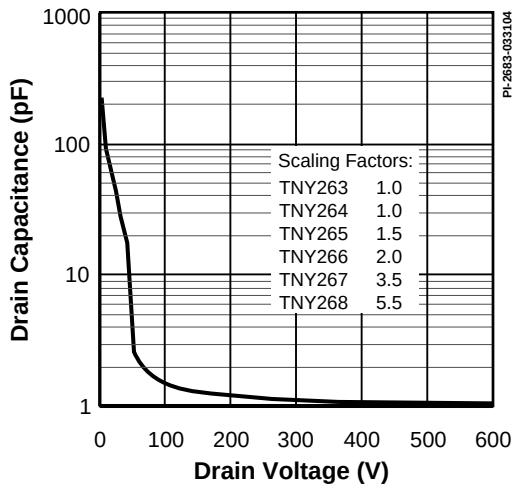

Figure 28. C_{OSS} vs. Drain Voltage.

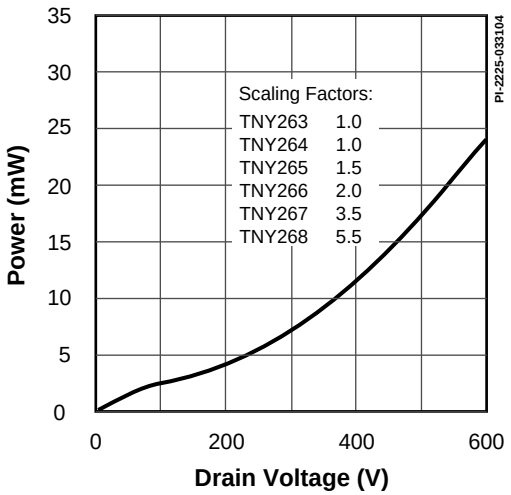

Figure 29. Drain Capacitance Power.

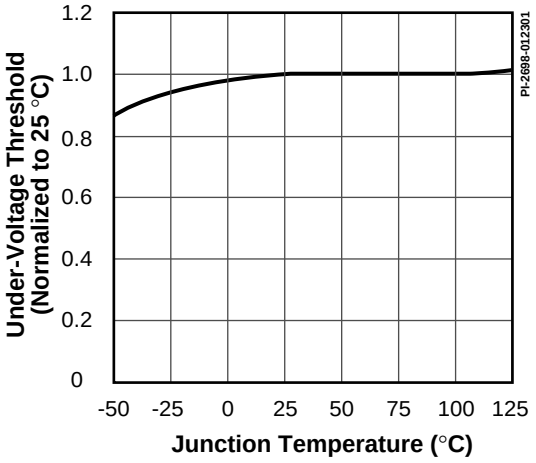

Figure 30. Undervoltage Threshold vs. Temperature.

PART ORDERING INFORMATION

TNY 264 G - TL

***TinySwitch* Product Family**	
Series Number	
Package Identifier	
G	Plastic Surface Mount SMD-8B
P	Plastic DIP-8B
Post-Processing Options	
Blank	Standard Configurations
TL	Tape & Reel, 1 k pcs minimum, G Package only

DIP-8B

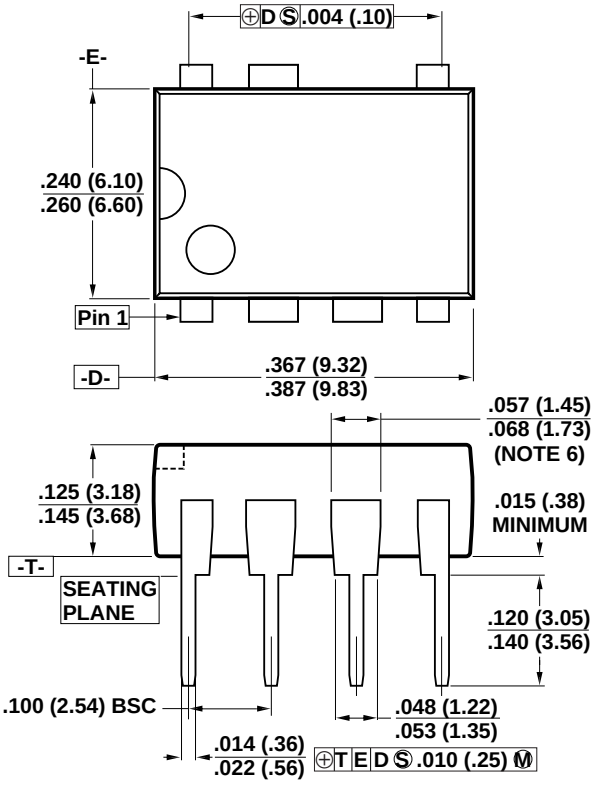

Notes:

1. **Package dimensions conform to JEDEC specification MS-001-AB (Issue B 7/85) for standard dual-in-line (DIP) package with .300 inch row spacing.**
2. **Controlling dimensions are inches. Millimeter sizes are shown in parentheses.**
3. **Dimensions shown do not include mold flash or other protrusions. Mold flash or protrusions shall not exceed .006 (.15) on any side.**
4. **Pin locations start with Pin 1, and continue counter-clockwise to Pin 8 when viewed from the top. The notch and/or dimple are aids in locating Pin 1. Pin 6 is omitted.**
5. **Minimum metal to metal spacing at the package body for the omitted lead location is .137 inch (3.48 mm).**
6. **Lead width measured at package body.**
7. **Lead spacing measured with the leads constrained to be perpendicular to plane T.**

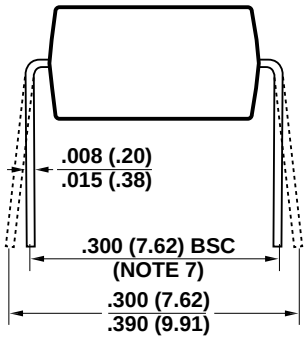

P08B

PI-2551-041003

SMD-8B

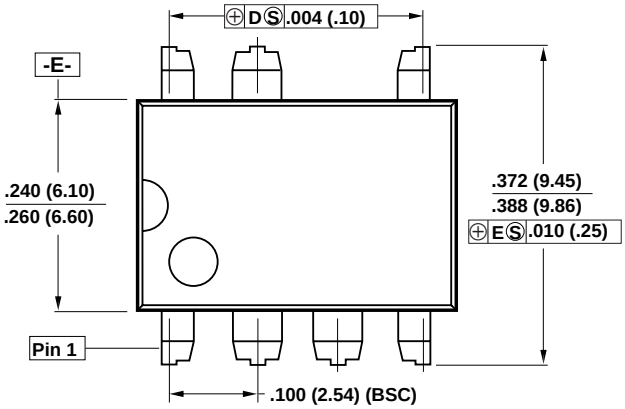

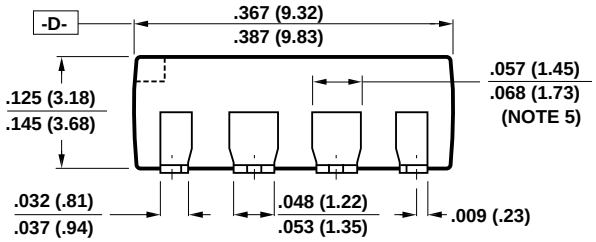

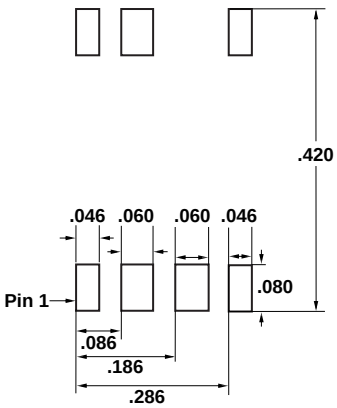

Solder Pad Dimensions

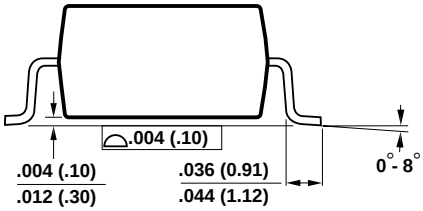

Notes:

1. Controlling dimensions are inches. Millimeter sizes are shown in parentheses.
2. Dimensions shown do not include mold flash or other protrusions. Mold flash or protrusions shall not exceed .006 (.15) on any side.
3. Pin locations start with Pin 1, and continue counter-clock Pin 8 when viewed from the top. Pin 6 is omitted.
4. Minimum metal to metal spacing at the package body for the omitted lead location is .137 inch (3.48 mm).
5. Lead width measured at package body.
6. D and E are referenced datums on the package body.

G08B

PI-2546-041003

Revision	Notes	Date
A	-	3/01
B	1) Corrected first page spacing and sentence in description describing innovative design. 2) Corrected Frequency Jitter in Figure 4 and Frequency Jitter in Parameter Table. 3) Added last sentence to Over Temperature Protection section. 4) Clarified detecting when there is no external resistor connected to the EN/UV pin. 5) Corrected Figure 6 and its description in the text. 6) Corrected formatting, grammer and style errors in text and figures. 7) Corrected and moved Worst Case EMI & Efficiency Measurement section. 8) Added PC Board Cleaning section. 9) Replaced Figure 21 and SMD-8B Package Drawing.	7/01
C	1) Corrected θ_{JA} for P/G package. 2) Updated Figures 15 and 16 and text description for Zener performance. 3) Corrected DIP-8B and SMD-8B Package Drawings.	4/03
D	1) Corrected EN/UV under-voltage threshold in text. 2) Corrected 2 MΩ connected between positive DC input to EN/UV pin in text and Figures 15 and 16.	3/04
E	1) Added TNY263 and TNY265.	4/04

For the latest updates, visit our Web site: *www.powerint.com*

Power Integrations may make changes to its products at any time. Power Integrations has no liability arising from your use of any information, device or circuit described herein nor does it convey any license under its patent rights or the rights of others. POWER INTEGRATIONS MAKES NO WARRANTIES HEREIN AND SPECIFICALLY DISCLAIMS ALL WARRANTIES INCLUDING, WITHOUT LIMITATION, THE IMPLIED WARRANTIES OF MERCHANTABILITY, FITNESS FOR A PARTICULAR PURPOSE, AND NON-INFRINGEMENT OF THIRD PARTY RIGHTS.

PATENT INFORMATION

The products and applications illustrated herein (including circuits external to the products and transformer construction) may be covered by one or more U.S. and foreign patents or potentially by pending U.S. and foreign patent applications assigned to Power Integrations. A complete list of Power Integrations' patents may be found at www.powerint.com.

LIFE SUPPORT POLICY

POWER INTEGRATIONS' PRODUCTS ARE NOT AUTHORIZED FOR USE AS CRITICAL COMPONENTS IN LIFE SUPPORT DEVICES OR SYSTEMS WITHOUT THE EXPRESS WRITTEN APPROVAL OF THE PRESIDENT OF POWER INTEGRATIONS. As used herein:

1. Life support devices or systems which, (a) are intended for surgical implant into the body, or (b) support or sustain life, and whose failure to perform, when properly used in accordance with instructions for use provided in the labeling, can be reasonably expected to result in a significant injury to the user.
2. A critical component is any component of a life support device or system whose failure to perform can be reasonably expected to cause the failure of the life support device or system, or to affect its safety or effectiveness.

The PI logo, ***TOPSwitch***, ***TinySwitch***, ***LinkSwitch*** and ***EcoSmart*** are registered trademarks of Power Integrations. ***PI Expert*** and ***DPA-Switch*** are trademarks of Power Integrations. ©Copyright 2004, Power Integrations

Power Integrations Worldwide Sales Support Locations

WORLD HEADQUARTERS
5245 Hellyer Avenue
San Jose, CA 95138, USA.
Main: +1-408-414-9200
Customer Service:
Phone: +1-408-414-9665
Fax: +1-408-414-9765
e-mail: usasales@powerint.com

CHINA (SHANGHAI)
Rm 807, Pacheer
Commercial Centre
555 Nanjing West Road
Shanghai, 200041, China
Phone: +86-21-6215-5548
Fax: +86-21-6215-2468
e-mail: chinasales@powerint.com

CHINA (SHENZHEN)
Rm# 1705, Bao Hua Bldg.
1016 Hua Qiang Bei Lu
Shenzhen Guangdong,
518031, China
Phone: +86-755-8367-5143
Fax: +86-755-8377-9610
e-mail: chinasales@powerint.com

GERMANY
Rueckertstrasse 3
D-80336, Muenchen, Germany
Phone: +49-89-5527-3910
Fax: +49-89-5527-3920
e-mail: eurosales@powerint.com

INDIA (TECHNICAL SUPPORT)
Innovatech
261/A, Ground Floor
7th Main, 17th Cross,
Sadashivanagar
Bangalore 560080
Phone: +91-80-5113-8020
Fax: +91-80-5113-8023
e-mail: indiasales@powerint.com

ITALY
Via Vittorio Veneto 12,
Bresso
Milano, 20091, Italy
Phone: +39-028-928-6001
Fax: +39-028-928-6009
e-mail: eurosales@powerint.com

JAPAN
Keihin-Tatemono 1st Bldg.
12-20 Shin-Yokohama
2-Chome,
Kohoku-ku, Yokohama-shi,
Kanagawa 222-0033, Japan
Phone: +81-45-471-1021
Fax: +81-45-471-3717
e-mail: japansales@powerint.com

KOREA
8th Floor, DongSung Bldg.
17-8 Yoido-dong,
Youngdeungpo-gu,
Seoul, 150-874, Korea
Phone: +82-2-782-2840
Fax: +82-2-782-4427
e-mail: koreasales@powerint.com

SINGAPORE
51 Newton Road
#15-08/10 Goldhill Plaza
Singapore, 308900
Phone: +65-6358-2160
Fax: +65-6358-2015
e-mail: singaporesales@powerint.com

TAIWAN
5F-1, No. 316, Nei Hu Rd., Sec. 1
Nei Hu Dist.
Taipei, Taiwan 114, R.O.C.
Phone: +886-2-2659-4570
Fax: +886-2-2659-4550
e-mail: taiwansales@powerint.com

UK (EUROPE & AFRICA HEADQUARTERS)
1st Floor, St. James's House
East Street
Farnham
Surrey
GU9 7TJ
United Kingdom
Phone: +44 (0) 1252-730-140
Fax: +44 (0) 1252-727-689
e-mail: eurosales@powerint.com

APPLICATIONS HOTLINE
World Wide +1-408-414-9660

APPLICATIONS FAX
World Wide +1-408-414-9760

ООО «ЛайфЭлектроникс» “LifeElectronics” LLC

ИНН 7805602321 КПП 780501001 Р/С 40702810122510004610 ФАКБ "АБСОЛЮТ БАНК" (ЗАО) в г.Санкт-Петербурге К/С 30101810900000000703 БИК 044030703

Компания «Life Electronics» занимается поставками электронных компонентов импортного и отечественного производства от производителей и со складов крупных дистрибьюторов Европы, Америки и Азии.

С конца 2013 года компания активно расширяет линейку поставок компонентов по направлению коаксиальный кабель, кварцевые генераторы и конденсаторы (керамические, пленочные, электролитические), за счёт заключения дистрибьюторских договоров

Мы предлагаем:

- *Конкурентоспособные цены и скидки постоянным клиентам.*
- *Специальные условия для постоянных клиентов.*
- *Подбор аналогов.*
- *Поставку компонентов в любых объемах, удовлетворяющих вашим потребностям.*

- *Приемлемые сроки поставки, возможна ускоренная поставка.*
- *Доставку товара в любую точку России и стран СНГ.*
- *Комплексную поставку.*
- *Работу по проектам и поставку образцов.*
- *Формирование склада под заказчика.*

- *Сертификаты соответствия на поставляемую продукцию (по желанию клиента).*
- *Тестирование поставляемой продукции.*
- *Поставку компонентов, требующих военную и космическую приемку.*
- *Входной контроль качества.*
- *Наличие сертификата ISO.*

В составе нашей компании организован Конструкторский отдел, призванный помогать разработчикам, и инженерам.

Конструкторский отдел помогает осуществить:

- *Регистрацию проекта у производителя компонентов.*
- *Техническую поддержку проекта.*
- *Защиту от снятия компонента с производства.*
- *Оценку стоимости проекта по компонентам.*
- *Изготовление тестовой платы монтаж и пусконаладочные работы.*

Тел: +7 (812) 336 43 04 (многоканальный)
Email: org@lifeelectronics.ru

www.lifeelectronics.ru