Ferrites and accessories

RM 5, RM 5 LP
Core and accessories

Series/Type: **B65805, B65806, B65822, B65539, B65518**

Date: May 2017

The following products presented in this data sheet are being withdrawn.

Ordering Code	Substitute Product	Date of Withdrawal	Deadline Last Orders	Last Shipments
B65806A5000X000		2018-06-08	2018-09-14	2018-12-14

For further information please contact your nearest EPCOS sales office, which will also support you in selecting a suitable substitute. The addresses of our worldwide sales network are presented at www.epcos.com/sales.

© EPCOS AG 2017. Reproduction, publication and dissemination of this publication, enclosures hereto and the information contained therein without EPCOS' prior express consent is prohibited.

EPCOS AG is a TDK Group Company.

RM 5

Core and accessories

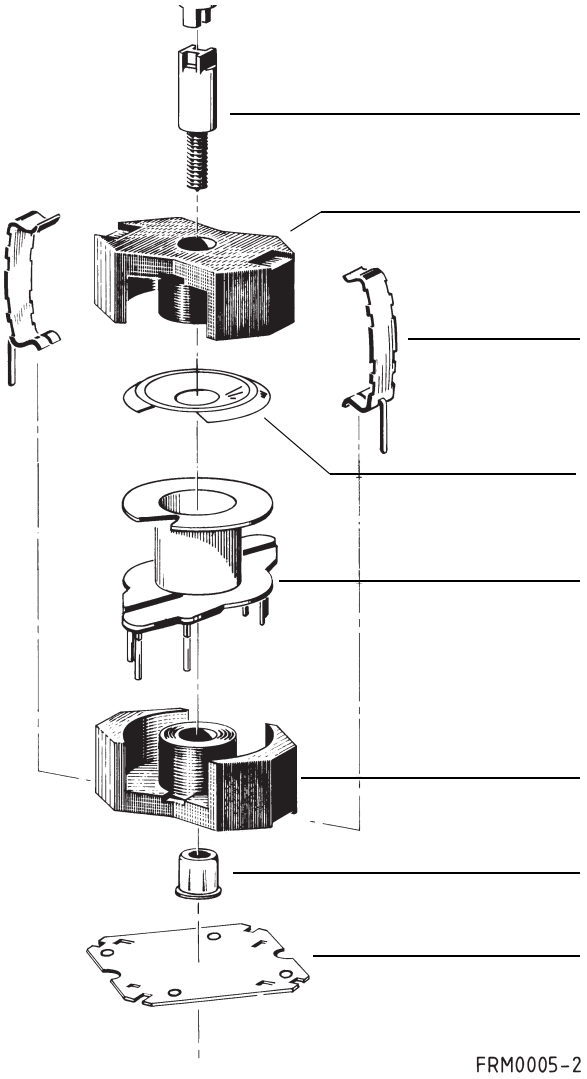

Individual parts	Part no.	Page
Adjusting screw	B65518 B65539 B65806	9
Core	B65805	3
Clamps	B65806	6
Insulating washer 1	B65806	6
Coil former	B65806	5
Core	B65805	3
Threaded sleeve (glued-in)		
Insulating washer 2	B65806	6

Example of an assembly set

Also available:	SMD coil formers	B65822	7, 8
	Clamps	B65806	7, 8
	<u>RM 5 low profile:</u>		
	Core	B65805P	10

- To IEC 62317-4
- Core without center hole for transformer applications
- Delivery mode: sets

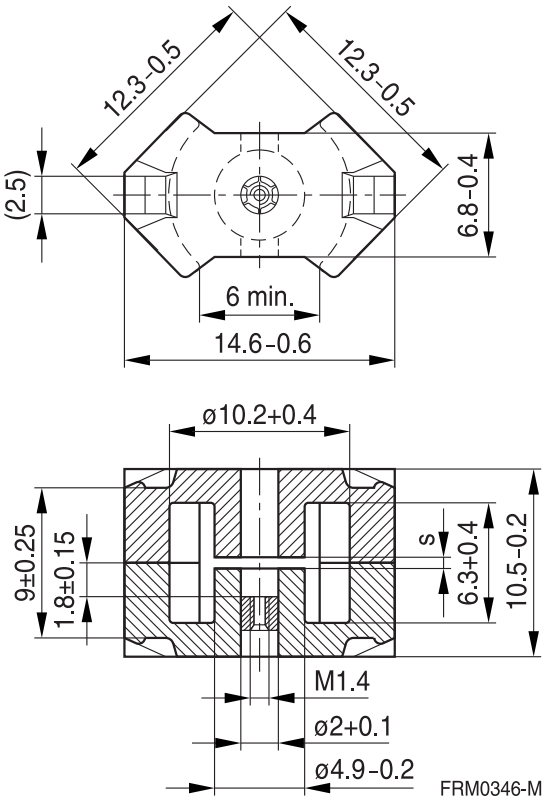

Magnetic characteristics (per set)

	with center hole	without center hole	
$\Sigma l/A$	1.0	0.93	mm^{-1}
l_e	20.8	22.1	mm
A_e	20.8	23.8	mm^2
A_{min}	—	18	mm^2
V_e	433	526	mm^3

Approx. weight (per set)

m	2.9	3.0	g

Gapped (A_L values/air gaps examples)

Material	A_L value nH	s approx. mm	μ_e	Ordering code[1)] -C with center hole -N with threaded sleeve
K1	25 ±3% 40 ±3%	1.0 0.40	19.9 31.8	B65805+0025A001 B65805+0040A001
M33	63 ±3% 100 ±3%	0.4 0.2	50.2 79.6	B65805+0063A033 B65805+0100A033
N48	160 ±3% 250 ±3% 315 ±3%	0.12 0.06 0.03	127 199 251	B65805+0160A048 B65805+0250A048 B65805+0315A048

1) Replace the + by the code letter “C” or “N” for the required version.

Ungapped

Material	A_L value nH	μ_e	P_V W/set	Ordering code -C with center hole -J without center hole
N48	1800 +30/–20%	1430		B65805C0000R048
N45	2600 +30/–20%	1920		B65805J0000R045
N30	3500 +30/–20%	2590		B65805J0000R030
T38	6700 +40/–30%	4950		B65805J0000Y038
T66	9600 +40/–30%	7090		B65805J0000Y066
N49	1300 +30/–20%	960	< 0.06 (50 mT, 500 kHz, 100 °C)	B65805J0000R049
N87	2000 +30/–20%	1480	< 0.32 (200 mT, 100 kHz, 100 °C)	B65805J0000R087
N97	2000 +30/–20%	1480	< 0.24 (200 mT, 100 kHz, 100 °C)	B65805J0000R097
N41	2600 +30/–20%	1920	< 0.10 (200 mT, 25 kHz, 100 °C)	B65805J0000R041

Other A_L values/air gaps and materials available on request — see Processing remarks on page 11.

Coil former

Material: GFR thermosetting plastic (UL 94 V-0, insulation class to IEC 60085: F ≙ max. operating temperature 155 °C), color code black SUMIKON PM 9630 [E41429 (M)], SUMITOMO BAKELITE CO LTD
Solderability: to IEC 60068-2-20, test Ta, method 1 (aging 3): 235 °C, 2 s
Resistance to soldering heat: to IEC 60068-2-20, test Tb, method 1B: 350 °C, 3.5 s
Winding: see Processing notes, 2.1
For matching clamps and insulating washers see page 6.

Sections	A_N mm²	l_N mm	A_R value µΩ	Pins	Ordering code
1	9.5	25	90	4 5 6 8	B65806N1104D001 B65806N1105D001 B65806N1106D001 B65806N1108D001
2	8.7	25	94	6	B65806N1106D002

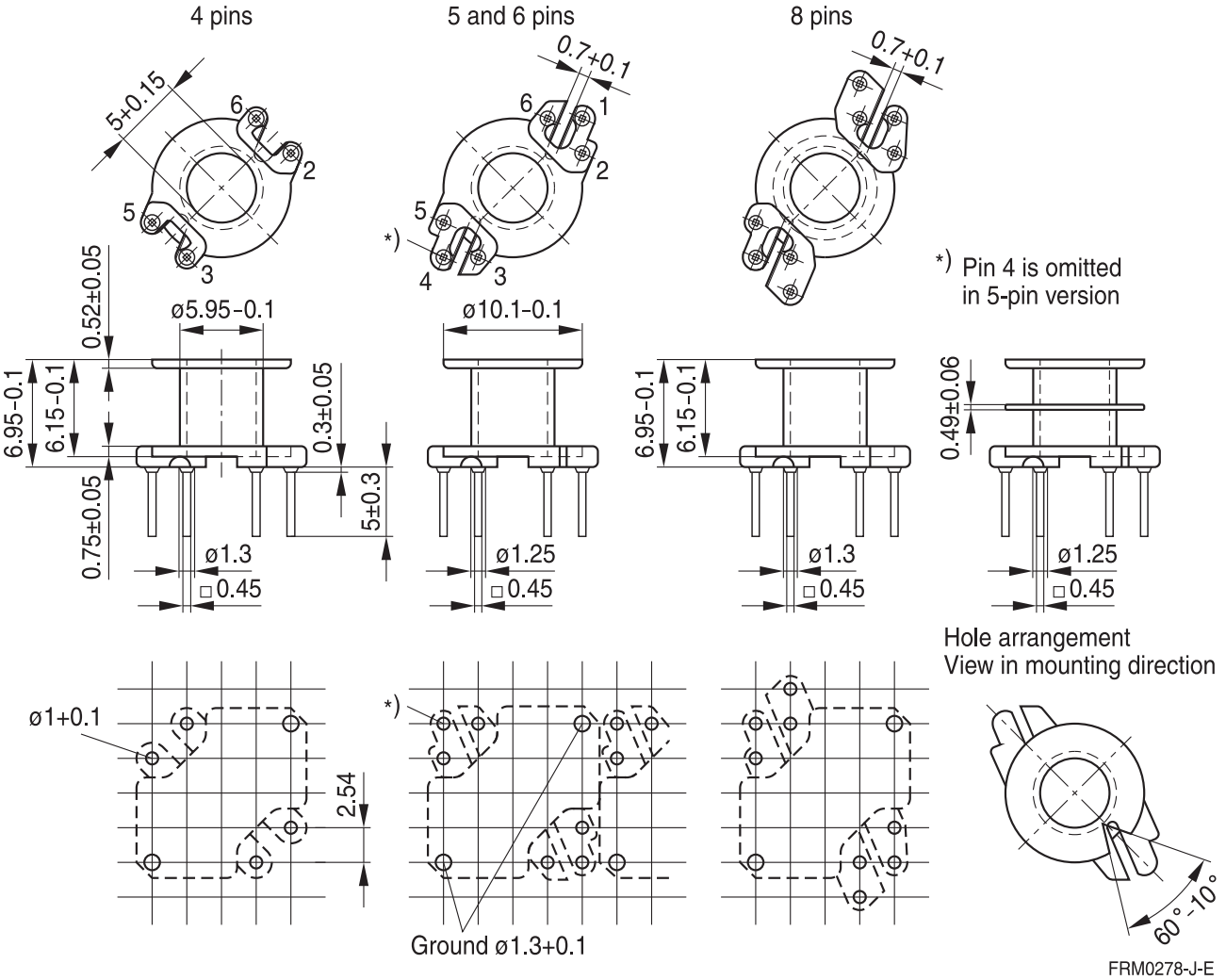

Clamp

- With ground terminal, made of stainless spring steel (tinned), 0.3 mm thick
- Solderability to IEC 60068-2-20, test Ta, method 1 (aging 3): 235 °C, 2 s

Insulating washer 1 between core and coil former

- For tolerance compensation and for insulation
- Made of polyarylate film (UL 94 V-0, insulation class to IEC 60085: E ≙ 120 °C), 0.08 mm thick Aryphan F685, [E167358 (M)], natural color, LOFO HIGH TECH FILM GMBH

Insulating washer 2 for double-clad PCBs

- Made of polycarbonate (UL 94 V-0, insulation class to IEC 60085: E ≙ 120 °C), 0.25 mm thick Makrofol FR7-2 [E168120 (M)], COVESTRO AG

	Ordering code
Clamp (ordering code per piece, 2 are required)	B65806B2203X000
Insulating washer 1 (reel packing, PU = 1 reel)	B65806A5000X000
Insulating washer 2 (bulk)	B65806D2005X000

Clamp

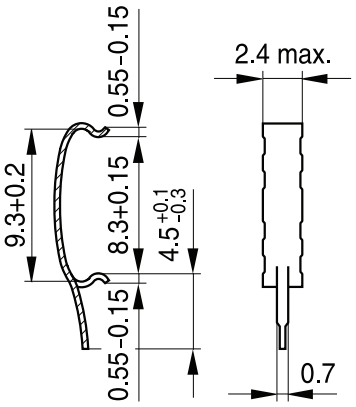

FRM0012-J

Insulating washer 1

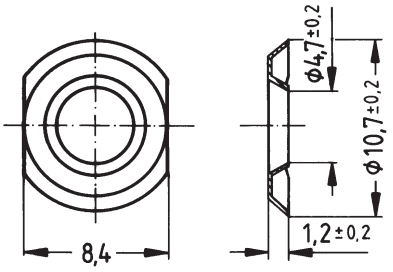

FRM0028-6

Insulating washer 2

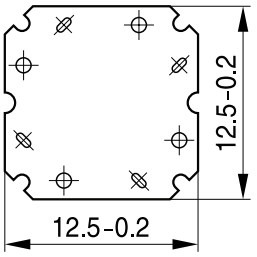

FRM0307-2

Clamping forces for RM 5

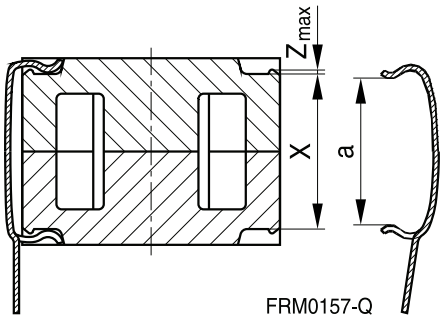

FRM0157-Q

F_{min}: Extension of clamp from a to $a_2 = X_{min}$
F_{max}: Extension of clamp from a to $a_1 = X_{max}$

Clamp opening a (mm)		8.3 +0.15
Core nose Z_{max} (mm)		0.15
Height of core pair X (mm)	X_{min}	8.75
	X_{max}	9.25
Clamping force F (N)	F_{min}	5
	F_{max}	40

SMD

SMD coil former with gullwing terminals

Material: GFR liquid crystal polymer (UL 94 V-0, insulation class to IEC 60085: F ≙ max. operating temperature 155 °C), color code black Vectra C 130 [E83005 (M)], CELANESE INTERNATIONAL CORP.

Solderability: to IEC 60068-2-58, test Td, method 6 (Group 3): 245 °C, 3 s

Resistance to soldering heat: to IEC 60068-2-58, test Td, method 6 (Group 3): 255 °C, 10 s permissible soldering temperature for wire-wrap connection on coil former: 400 °C, 1 s

Winding: see Processing notes, 2.1

Clamp

- Without ground terminal, made of stainless spring steel, 0.335 mm thick

Sections	A_N mm²	l_N mm	A_R value µΩ	Terminals	Ordering code
1	11.1	25	77	8	B65822F1008T001
2	10.2	25	85	8	B65822F1008T002
Clamp(ordering code per piece, 2 are required)					B65806J2204X000

Coil former

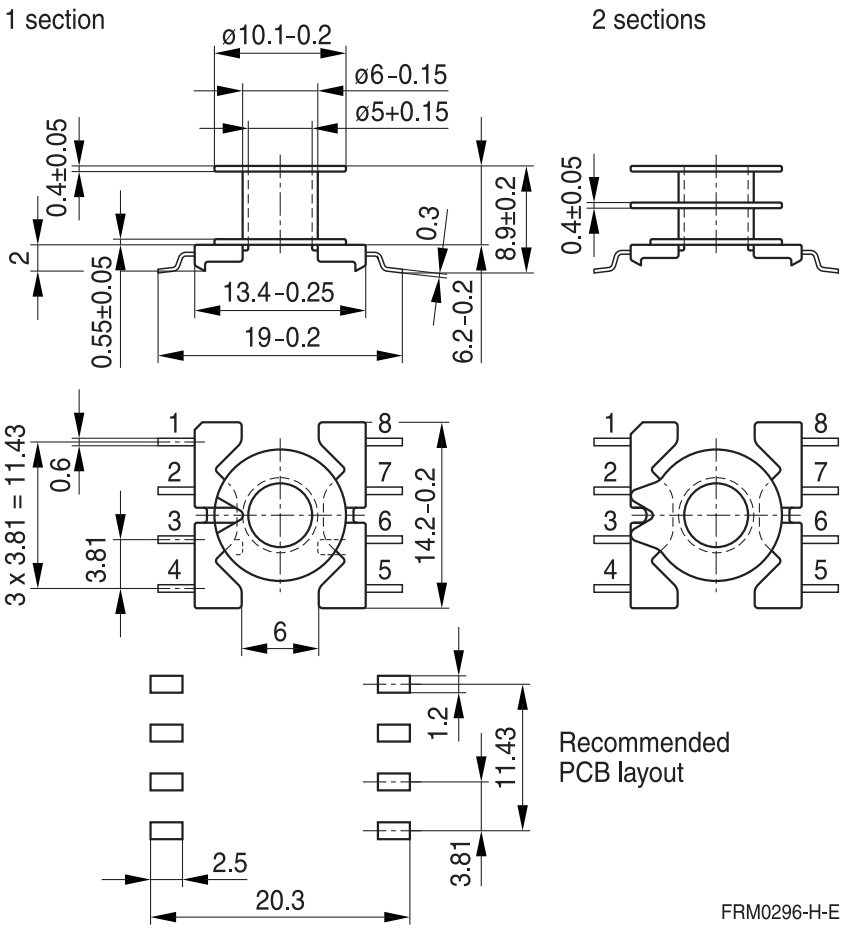

Clamp

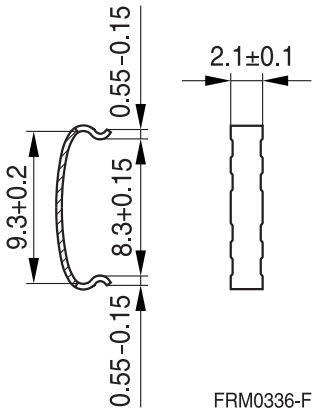

SMD

SMD coil former with J terminals

Material: GFR liquid crystal polymer (UL 94 V-0, insulation class to IEC 60085: F ≙ max. operating temperature 155 °C), color code black Vectra C 130 [E83005 (M)], CELANESE INTERNATIONAL CORP.

Solderability: to IEC 60068-2-58, test Td, method 6 (Group 3): 245 °C, 3 s

Resistance to soldering heat: to IEC 60068-2-58, test Td, method 6 (Group 3): 255 °C, 10 s permissible soldering temperature for wire-wrap connection on coil former: 400 °C, 1 s

Winding: see Processing notes, 2.1

Clamp

- Without ground terminal, made of stainless spring steel, 0.335 mm thick

Sections	A_N mm²	l_N mm	A_R value µΩ	Terminals	Ordering code
1	11.1	25	73	8	B65822J1008T001
Clamp(ordering code per piece, 2 are required)					B65806J2204X000

Coil former

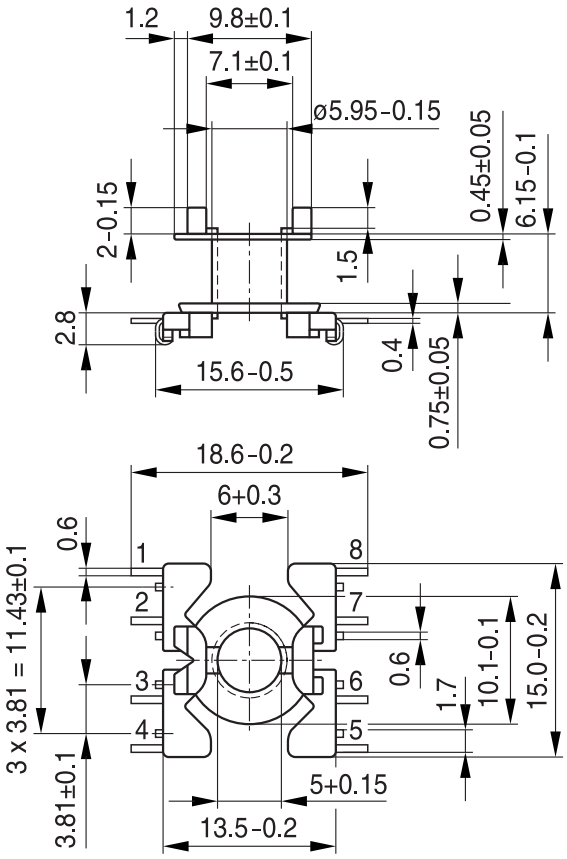

Clamp

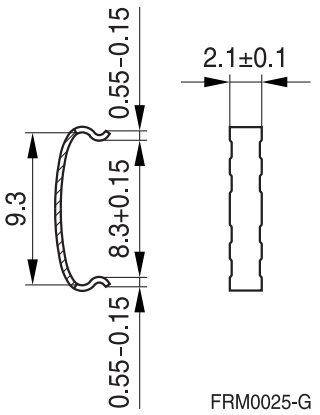

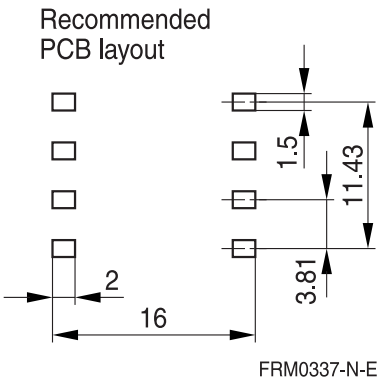

Adjusting screw

- Tube core with thread and core brake made of GFR polyterephthalate Pocan B3235® [E245249 (M)], LANXESS AG

Figure	Tube core ∅ × length (mm)	Material	Color code	Ordering code
a	1.81 × 2.0	K1	yellow	B65539C1003X001
a	1.81 × 2.7	N22	red	B65539C1002X022
b	1.81 × 3.4	N22	green	B65806C3001X022
c	1.81 × 2.0	K1	blue	B65518C3000X001

a

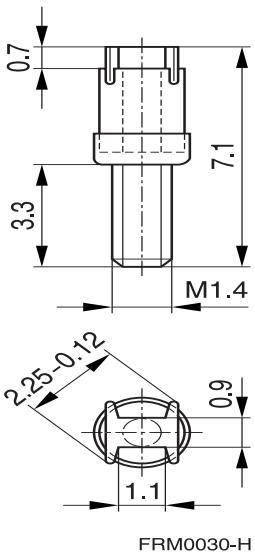

b

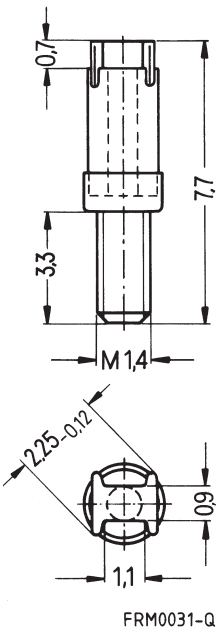

c

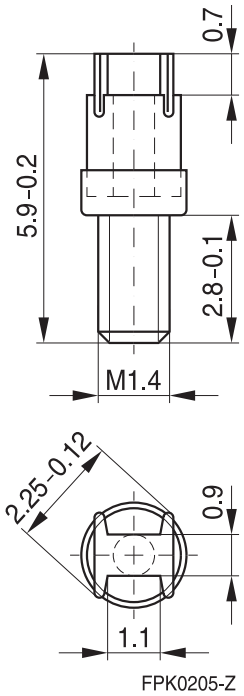

RM 5 »Low Profile«

Core B65805P

- To IEC 62317-4
- For compact transformers
- Without center hole
- Delivery mode: sets

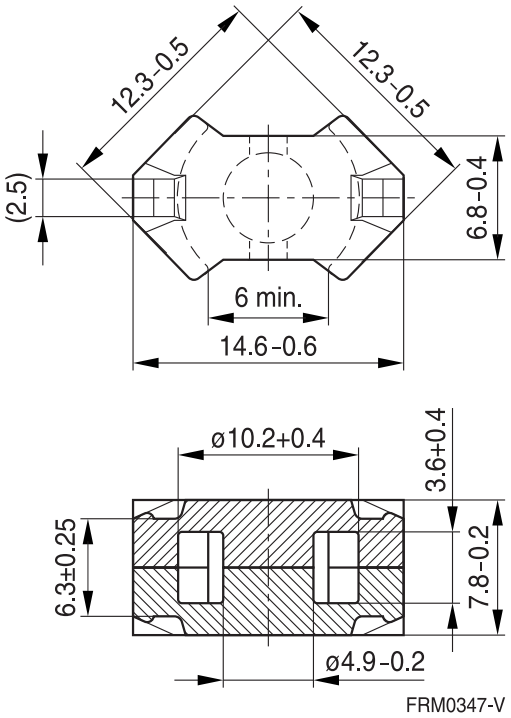

Magnetic characteristics (per set)

$\Sigma l/A$ = 0.71 mm^{-1}
l_e = 17.5 mm
A_e = 24.5 mm^2
A_{min} = 18 mm^2
V_e = 430 mm^3

Approx. weight 2.6 g/set

Ungapped

Material	A_L value nH	μ_e	P_V W/set	Ordering code
T38	7700 +40/–30%	4380		B65805P0000Y038
N49	1700 +30/–20%	970	< 0.09 (50 mT, 500 kHz, 100 °C)	B65805P0000R049
N92	1900 +30/–20%	1080	< 0.29 (200 mT, 100 kHz, 100 °C)	B65805P0000R092
N87	2400 +30/–20%	1360	< 0.26 (200 mT, 100 kHz, 100 °C)	B65805P0000R087

Other A_L values/air gaps and materials available on request — see Processing remarks on page 11.

Mechanical stress and mounting

Ferrite cores have to meet mechanical requirements during assembling and for a growing number of applications. Since ferrites are ceramic materials one has to be aware of the special behavior under mechanical load.

As valid for any ceramic material, ferrite cores are brittle and sensitive to any shock, fast temperature changing or tensile load. Especially high cooling rates under ultrasonic cleaning and high static or cyclic loads can cause cracks or failure of the ferrite cores.

For detailed information see data book, chapter *“General - Definitions, 8.1”*.

Effects of core combination on A_L value

Stresses in the core affect not only the mechanical but also the magnetic properties. It is apparent that the initial permeability is dependent on the stress state of the core. The higher the stresses are in the core, the lower is the value for the initial permeability. Thus the embedding medium should have the greatest possible elasticity.

For detailed information see data book, chapter *“General - Definitions, 8.1”*.

Heating up

Ferrites can run hot during operation at higher flux densities and higher frequencies.

NiZn-materials

The magnetic properties of NiZn-materials can change irreversible in high magnetic fields.

Ferrite Accessories

EPCOS ferrite accessories have been designed and evaluated only in combination with EPCOS ferrite cores. EPCOS explicitly points out that EPCOS ferrite accessories or EPCOS ferrite cores may not be compatible with those of other manufacturers. Any such combination requires prior testing by the customer and will be at the customer‘s own risk.

EPCOS assumes no warranty or reliability for the combination of EPCOS ferrite accessories with cores and other accessories from any other manufacturer.

Processing remarks

The start of the winding process should be soft. Else the flanges may be destroyed.

- Too strong winding forces may blast the flanges or squeeze the tube that the cores can not be mounted any more.
- Too long soldering time at high temperature (>300 °C) may effect coplanarity or pin arrangement.
- Not following the processing notes for soldering of the J-leg terminals may cause solderability problems at the transformer because of pollution with Sn oxyde of the tin bath or burned insulation of the wire. For detailed information see chapter *“Processing notes”*, section 2.2.
- The dimensions of the hole arrangement have fixed values and should be understood as a recommendation for drilling the printed circuit board. For dimensioning the pins, the group of holes can only be seen under certain conditions, as they fit into the given hole arrangement. To avoid problems when mounting the transformer, the manufacturing tolerances for positioning the customers’ drilling process must be considered by increasing the hole diameter.

Display of ordering codes for EPCOS products

The ordering code for one and the same product can be represented differently in data sheets, data books, other publications and the website of EPCOS, or in order-related documents such as shipping notes, order confirmations and product labels. **The varying representations of the ordering codes are due to different processes employed and do not affect the specifications of the respective products**. Detailed information can be found on the Internet under www.epcos.com/orderingcodes.

Symbols and terms

Symbol	Meaning	Unit
A	Cross section of coil	mm^2
A_e	Effective magnetic cross section	mm^2
A_L	Inductance factor; $A_L = L/N^2$	nH
A_{L1}	Minimum inductance at defined high saturation ($\triangleq \mu_a$)	nH
A_{min}	Minimum core cross section	mm^2
A_N	Winding cross section	mm^2
A_R	Resistance factor; $A_R = R_{Cu}/N^2$	$\mu\Omega = 10^{-6}\ \Omega$
B	RMS value of magnetic flux density	Vs/m^2, mT
ΔB	Flux density deviation	Vs/m^2, mT
$\hat{B}$	Peak value of magnetic flux density	Vs/m^2, mT
$\Delta\hat{B}$	Peak value of flux density deviation	Vs/m^2, mT
B_{DC}	DC magnetic flux density	Vs/m^2, mT
B_R	Remanent flux density	Vs/m^2, mT
B_S	Saturation magnetization	Vs/m^2, mT
C_0	Winding capacitance	F = As/V
CDF	Core distortion factor	$mm^{-4.5}$
DF	Relative disaccommodation coefficient $DF = d/\mu_i$	
d	Disaccommodation coefficient	
E_a	Activation energy	J
f	Frequency	s^{-1}, Hz
f_{cutoff}	Cut-off frequency	s^{-1}, Hz
f_{max}	Upper frequency limit	s^{-1}, Hz
f_{min}	Lower frequency limit	s^{-1}, Hz
f_r	Resonance frequency	s^{-1}, Hz
f_{Cu}	Copper filling factor	
g	Air gap	mm
H	RMS value of magnetic field strength	A/m
$\hat{H}$	Peak value of magnetic field strength	A/m
H_{DC}	DC field strength	A/m
H_c	Coercive field strength	A/m
h	Hysteresis coefficient of material	10^{-6} cm/A
h/μ_i^2	Relative hysteresis coefficient	10^{-6} cm/A
I	RMS value of current	A
I_{DC}	Direct current	A
$\hat{I}$	Peak value of current	A
J	Polarization	Vs/m^2
k	Boltzmann constant	J/K
k_3	Third harmonic distortion	
k_{3c}	Circuit third harmonic distortion	
L	Inductance	H = Vs/A

Symbols and terms

Symbol	Meaning	Unit
$\Delta L/L$	Relative inductance change	H
L_0	Inductance of coil without core	H
L_H	Main inductance	H
L_p	Parallel inductance	H
L_{rev}	Reversible inductance	H
L_s	Series inductance	H
l_e	Effective magnetic path length	mm
l_N	Average length of turn	mm
N	Number of turns	
P_{Cu}	Copper (winding) losses	W
P_{trans}	Transferrable power	W
P_V	Relative core losses	mW/g
PF	Performance factor	
Q	Quality factor ($Q = \omega L/R_s = 1/\tan \delta_L$)	
R	Resistance	Ω
R_{Cu}	Copper (winding) resistance (f = 0)	Ω
R_h	Hysteresis loss resistance of a core	Ω
ΔR_h	R_h change	Ω
R_i	Internal resistance	Ω
R_p	Parallel loss resistance of a core	Ω
R_s	Series loss resistance of a core	Ω
R_{th}	Thermal resistance	K/W
R_V	Effective loss resistance of a core	Ω
s	Total air gap	mm
T	Temperature	°C
ΔT	Temperature difference	K
T_C	Curie temperature	°C
t	Time	s
t_v	Pulse duty factor	
$\tan \delta$	Loss factor	
$\tan \delta_L$	Loss factor of coil	
$\tan \delta_r$	(Residual) loss factor at $H \rightarrow 0$	
$\tan \delta_e$	Relative loss factor	
$\tan \delta_h$	Hysteresis loss factor	
$\tan \delta/\mu_i$	Relative loss factor of material at $H \rightarrow 0$	
U	RMS value of voltage	V
Û	Peak value of voltage	V
V_e	Effective magnetic volume	mm^3
Z	Complex impedance	Ω
Z_n	Normalized impedance $\lvert Z\rvert_n = \lvert Z\rvert / N^2 \times \varepsilon\ (l_e/A_e)$	Ω/mm

Symbols and terms

Symbol	Meaning	Unit
α	Temperature coefficient (TK)	1/K
α_F	Relative temperature coefficient of material	1/K
α_e	Temperature coefficient of effective permeability	1/K
ε_r	Relative permittivity	
Φ	Magnetic flux	Vs
η	Efficiency of a transformer	
η_B	Hysteresis material constant	mT^{-1}
η_i	Hysteresis core constant	$A^{-1}H^{-1/2}$
λ_s	Magnetostriction at saturation magnetization	
μ	Relative complex permeability	
μ_0	Magnetic field constant	Vs/Am
μ_a	Relative amplitude permeability	
μ_{app}	Relative apparent permeability	
μ_e	Relative effective permeability	
μ_i	Relative initial permeability	
μ_p'	Relative real (inductive) component of $\overline{\mu}$ (for parallel components)	
μ_p''	Relative imaginary (loss) component of $\overline{\mu}$ (for parallel components)	
μ_r	Relative permeability	
μ_{rev}	Relative reversible permeability	
μ_s'	Relative real (inductive) component of $\overline{\mu}$ (for series components)	
μ_s''	Relative imaginary (loss) component of $\overline{\mu}$ (for series components)	
μ_{tot}	Relative total permeability derived from the static magnetization curve	
ρ	Resistivity	Ωm^{-1}
$\Sigma l/A$	Magnetic form factor	mm^{-1}
τ_{Cu}	DC time constant $\tau_{Cu} = L/R_{Cu} = A_L/A_R$	s
ω	Angular frequency; $\omega = 2\,\Pi f$	s^{-1}

All dimensions are given in mm.

SMD Surface-mount device

Important notes

The following applies to all products named in this publication:

1. Some parts of this publication contain **statements about the suitability of our products for certain areas of application**. These statements are based on our knowledge of typical requirements that are often placed on our products in the areas of application concerned. We nevertheless expressly point out **that such statements cannot be regarded as binding statements about the suitability of our products for a particular customer application.** As a rule we are either unfamiliar with individual customer applications or less familiar with them than the customers themselves. For these reasons, it is always ultimately incumbent on the customer to check and decide whether a product with the properties described in the product specification is suitable for use in a particular customer application.
2. We also point out that **in individual cases, a malfunction of electronic components or failure before the end of their usual service life cannot be completely ruled out in the current state of the art, even if they are operated as specified.** In customer applications requiring a very high level of operational safety and especially in customer applications in which the malfunction or failure of an electronic component could endanger human life or health (e.g. in accident prevention or life-saving systems), it must therefore be ensured by means of suitable design of the customer application or other action taken by the customer (e.g. installation of protective circuitry or redundancy) that no injury or damage is sustained by third parties in the event of malfunction or failure of an electronic component.
3. **The warnings, cautions and product-specific notes must be observed.**
4. In order to satisfy certain technical requirements, **some of the products described in this publication may contain substances subject to restrictions in certain jurisdictions (e.g. because they are classed as hazardous)**. Useful information on this will be found in our Material Data Sheets on the Internet (www.tdk-electronics.tdk.com/material). Should you have any more detailed questions, please contact our sales offices.
5. We constantly strive to improve our products. Consequently, **the products described in this publication may change from time to time**. The same is true of the corresponding product specifications. Please check therefore to what extent product descriptions and specifications contained in this publication are still applicable before or when you place an order.

   We also **reserve the right to discontinue production and delivery of products**. Consequently, we cannot guarantee that all products named in this publication will always be available. The aforementioned does not apply in the case of individual agreements deviating from the foregoing for customer-specific products.
6. Unless otherwise agreed in individual contracts, **all orders are subject to our General Terms and Conditions of Supply.**
7. **Our manufacturing sites serving the automotive business apply the IATF 16949 standard.** The IATF certifications confirm our compliance with requirements regarding the quality management system in the automotive industry. Referring to customer requirements and customer specific requirements ("CSR") TDK always has and will continue to have the policy of respecting individual agreements. Even if IATF 16949 may appear to support the acceptance of unilateral requirements, we hereby like to emphasize that **only requirements mutually agreed upon can and will be implemented in our Quality Management System.** For clarification purposes we like to point out that obligations from IATF 16949 shall only become legally binding if individually agreed upon.
8. The trade names EPCOS, CeraCharge, CeraDiode, CeraLink, CeraPad, CeraPlas, CSMP, CTVS, DeltaCap, DigiSiMic, ExoCore, FilterCap, FormFit, LeaXield, MiniBlue, MiniCell, MKD, MKK, MotorCap, PCC, PhaseCap, PhaseCube, PhaseMod, PhiCap, PowerHap, PQSine, PQvar, SIFERRIT, SIFI, SIKOREL, SilverCap, SIMDAD, SiMic, SIMID, SineFormer, SIOV, ThermoFuse, WindCap are **trademarks registered or pending** in Europe and in other countries. Further information will be found on the Internet at www.tdk-electronics.tdk.com/trademarks.

Release 2018-10

Mouser Electronics

Authorized Distributor

Click to View Pricing, Inventory, Delivery & Lifecycle Information:

EPCOS / TDK:

B65518C3000X001 B65805J0000R045 B65805C0000R048 B65805C0000Y038 B65805C0160A048 B65805C0250A048 B65805C0315A048 B65805J0000R030 B65805J0000R041 B65805J0000R049 B65805J0000R087 B65805J0000R097 B65805J0000Y038 B65805J0000Y066 B65805N0025A001 B65805N0040A001 B65805N0063A033 B65805N0100A033 B65805N0160A048 B65805N0250A048 B65805N0315A048 B65805P0000R087 B65805P0000R092 B65806D2005X000 B65806J2204X000 B65806K1004D001 B65806K1006D001 B65806K1006D002 B65806K1008D001 B65822F1008T001 B65822F1008T002 B65822J1008T001 B65806N1108D001 B65806N1105D001 B65806N1104D001 B65806N1106D001 B65806N1106D002 B65805C0063A033 B65805C0100A033 B65805P0000Y038

ООО «ЛайфЭлектроникс» “LifeElectronics” LLC

ИНН 7805602321 КПП 780501001 Р/С 40702810122510004610 ФАКБ "АБСОЛЮТ БАНК" (ЗАО) в г.Санкт-Петербурге К/С 30101810900000000703 БИК 044030703

Компания «Life Electronics» занимается поставками электронных компонентов импортного и отечественного производства от производителей и со складов крупных дистрибьюторов Европы, Америки и Азии.

С конца 2013 года компания активно расширяет линейку поставок компонентов по направлению коаксиальный кабель, кварцевые генераторы и конденсаторы (керамические, пленочные, электролитические), за счёт заключения дистрибьюторских договоров

Мы предлагаем:

- *Конкурентоспособные цены и скидки постоянным клиентам.*
- *Специальные условия для постоянных клиентов.*
- *Подбор аналогов.*
- *Поставку компонентов в любых объемах, удовлетворяющих вашим потребностям.*

- *Приемлемые сроки поставки, возможна ускоренная поставка.*
- *Доставку товара в любую точку России и стран СНГ.*
- *Комплексную поставку.*
- *Работу по проектам и поставку образцов.*
- *Формирование склада под заказчика.*

- *Сертификаты соответствия на поставляемую продукцию (по желанию клиента).*
- *Тестирование поставляемой продукции.*
- *Поставку компонентов, требующих военную и космическую приемку.*
- *Входной контроль качества.*
- *Наличие сертификата ISO.*

В составе нашей компании организован Конструкторский отдел, призванный помогать разработчикам, и инженерам.

Конструкторский отдел помогает осуществить:

- *Регистрацию проекта у производителя компонентов.*
- *Техническую поддержку проекта.*
- *Защиту от снятия компонента с производства.*
- *Оценку стоимости проекта по компонентам.*
- *Изготовление тестовой платы монтаж и пусконаладочные работы.*

Тел: +7 (812) 336 43 04 (многоканальный)
Email: org@lifeelectronics.ru

www.lifeelectronics.ru