LC²MOS Signal Conditioning ADC

AD7712

FEATURES

Charge Balancing ADC
- **24 Bits No Missing Codes**
- **±0.0015% Nonlinearity**

High Level and Low Level Analog Input Channels
Programmable Gain for Both Inputs
- **Gains from 1 to 128**
- **Differential Input for Low Level Channel**

Low-Pass Filter with Programmable Filter Cutoffs
Ability to Read/Write Calibration Coefficients
Bidirectional Microcontroller Serial Interface
Internal/External Reference Option
Single- or Dual-Supply Operation
Low Power (25 mW typ) with Power-Down Mode (100 μW typ)

APPLICATIONS

Process Control
Smart Transmitters
Portable Industrial Instruments

FUNCTIONAL BLOCK DIAGRAM

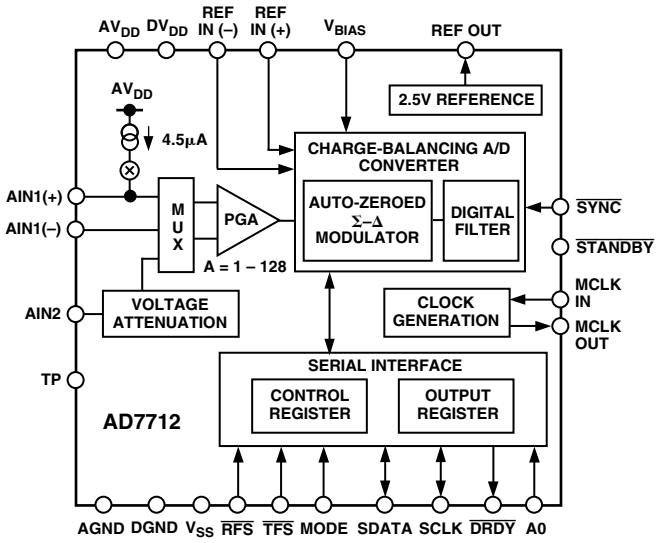

GENERAL DESCRIPTION

The AD7712 is a complete analog front end for low frequency measurement applications. The device has two analog input channels and accepts either low level signals directly from a transducer or high level ($\pm 4 \times V_{REF}$) signals, and outputs a serial digital word. It employs a sigma-delta conversion technique to realize up to 24 bits of no missing codes performance. The low level input signal is applied to a proprietary programmable gain front end based around an analog modulator. The high level analog input is attenuated before being applied to the same modulator. The modulator output is processed by an on-chip digital filter. The first notch of this digital filter can be programmed via the on-chip control register, allowing adjustment of the filter cutoff and settling time.

Normally, one of the channels will be used as the main channel with the second channel used as an auxiliary input to periodically measure a second voltage. The part can be operated from a single supply (by tying the V_{SS} pin to AGND), provided that the input signals on the low level analog input are more positive than –30 mV. By taking the V_{SS} pin negative, the part can convert signals down to $-V_{REF}$ on this low level input. This low level input, as well as the reference input, features differential input capability.

The AD7712 is ideal for use in smart, microcontroller based systems. Input channel selection, gain settings, and signal polarity can be configured in software using the bidirectional serial port. The AD7712 also contains self-calibration, system calibration, and background calibration options, and allows the user to read and to write the on-chip calibration registers.

CMOS construction ensures low power dissipation, and a hardware programmable power-down mode reduces the standby power consumption to only 100 μW typical. The part is available in a 24-lead, 0.3 inch wide, plastic and hermetic dual-in-line package (DIP), as well as a 24-lead small outline (SOIC) package.

PRODUCT HIGHLIGHTS

1. The low level analog input channel allows the AD7712 to accept input signals directly from a strain gage or transducer, removing a considerable amount of signal conditioning. To maximize the flexibility of the part, the high level analog input accepts signals of $\pm 4 \times V_{REF}$/GAIN.
2. The AD7712 is ideal for microcontroller or DSP processor applications with an on-chip control register that allows control over filter cutoff, input gain, channel selection, signal polarity, and calibration modes.
3. The AD7712 allows the user to read and to write the on-chip calibration registers. This means that the microcontroller has much greater control over the calibration procedure.
4. No missing codes ensures true, usable, 23-bit dynamic range coupled with excellent ±0.0015% accuracy. The effects of temperature drift are eliminated by on-chip self-calibration, which removes zero-scale and full-scale errors.

REV. F

Information furnished by Analog Devices is believed to be accurate and reliable. However, no responsibility is assumed by Analog Devices for its use, nor for any infringements of patents or other rights of third parties that may result from its use. No license is granted by implication or otherwise under any patent or patent rights of Analog Devices. Trademarks and registered trademarks are the property of their respective owners.

One Technology Way, P.O. Box 9106, Norwood, MA 02062-9106, U.S.A.
Tel: 781/329-4700 **www.analog.com**
Fax: 781/326-8703 **© 2004 Analog Devices, Inc. All rights reserved.**

AD7712–SPECIFICATIONS (AV_{DD} = +5 V ± 5%; DV_{DD} = +5 V ± 5%; V_{SS} = 0 V or –5 V ± 5%; REF IN(+) = +2.5 V; REF IN(–) = AGND; MCLK IN = 10 MHz unless otherwise stated. All specifications T_{MIN} to T_{MAX}, unless otherwise noted.)

Parameter	A, S Versions[1]	Unit	Conditions/Comments
STATIC PERFORMANCE			
No Missing Codes	24	Bits min	Guaranteed by Design. For Filter Notches ≤ 60 Hz
	22	Bits min	For Filter Notch = 100 Hz
	18	Bits min	For Filter Notch = 250 Hz
	15	Bits min	For Filter Notch = 500 Hz
	12	Bits min	For Filter Notch = 1 kHz
Output Noise	See Tables I and II		Depends on Filter Cutoffs and Selected Gain
Integral Nonlinearity @ 25°C	±0.0015	% FSR max	Filter Notches ≤ 60 Hz
T_{MIN} to T_{MAX}	±0.003	% FSR max	Typically ±0.0003%
Positive Full-Scale Error[2, 3, 4]			Excluding Reference
Full-Scale Drift[5]	1	µV/°C typ	Excluding Reference. For Gains of 1, 2
	0.3	µV/°C typ	Excluding Reference. For Gains of 4, 8, 16, 32, 64, 128
Unipolar Offset Error[2, 4]			
Unipolar Offset Drift[5]	0.5	µV/°C typ	For Gains of 1, 2
	0.25	µV/°C typ	For Gains of 4, 8, 16, 32, 64, 128
Bipolar Zero Error[2, 4]			
Bipolar Zero Drift[5]	0.5	µV/°C typ	For Gains of 1, 2
	0.25	µV/°C typ	For Gains of 4, 8, 16, 32, 64, 128
Gain Drift	2	ppm/°C typ	
Bipolar Negative Full-Scale Error[2] @ 25°C	±0.003	% FSR max	Excluding Reference
T_{MIN} to T_{MAX}	±0.006	% FSR max	Typically ±0.0006%
Bipolar Negative Full-Scale Drift[5]	1	µV/°C typ	Excluding Reference. For Gains of 1, 2
	0.3	µV/°C typ	Excluding Reference. For Gains of 4, 8, 16, 32, 64, 128
ANALOG INPUTS/REFERENCE INPUTS			
Normal-Mode 50 Hz Rejection[6]	100	dB min	For Filter Notches of 10 Hz, 25 Hz, 50 Hz, ±0.02 × f_{NOTCH}
Normal-Mode 60 Hz Rejection[6]	100	dB min	For Filter Notches of 10 Hz, 30 Hz, 60 Hz, ±0.02 × f_{NOTCH}
AIN1/REF IN			
DC Input Leakage Current @ 25°C[6]	10	pA max	
T_{MIN} to T_{MAX}	1	nA max	
Sampling Capacitance[6]	20	pF max	
Common-Mode Rejection (CMR)	100	dB min	At dc and AV_{DD} = 5 V
	90	dB min	At dc and AV_{DD} = 10 V
Common-Mode 50 Hz Rejection[6]	150	dB min	For Filter Notches of 10 Hz, 25 Hz, 50 Hz, ±0.02 × f_{NOTCH}
Common-Mode 60 Hz Rejection[6]	150	dB min	For Filter Notches of 10 Hz, 30 Hz, 60 Hz, ±0.02 × f_{NOTCH}
Common-Mode Voltage Range[7]	V_{SS} to AV_{DD}	V min to V max	
Analog Inputs[8]			
Input Sampling Rate, f_S	See Table III		
AIN1 Input Voltage Range[9]			For Normal Operation. Depends on Gain Selected
	0 V to V_{REF}[10]	V max	Unipolar Input Range (B/U Bit of Control Register = 1)
	±V_{REF}	V max	Bipolar Input Range (B/U Bit of Control Register = 0)
AIN2 Input Voltage Range[9]			For Normal Operation. Depends on Gain Selected
	0 V to 4 × V_{REF}[10]	V max	Unipolar Input Range (B/U Bit of Control Register = 1)
	±4 × V_{REF}	V max	Bipolar Input Range (B/U Bit of Control Register = 0)
AIN2 DC Input Impedance	30	kΩ	
AIN2 Gain Error[11]	±0.05	% typ	Additional Error Contributed by Resistor Attenuator
AIN2 Gain Drift	1	ppm/°C typ	Additional Drift Contributed by Resistor Attenuator
AIN2 Offset Error[11]	10	mV max	Additional Error Contributed by Resistor Attenuator
AIN2 Offset Drift	20	µV/°C typ	
Reference Inputs			
REF IN(+) – REF IN(–) Voltage[12]	2.5 to 5	V min to V max	For Specified Performance. Part Is Functional with Lower V_{REF} Voltages
Input Sampling Rate, f_S	$f_{CLK\ IN}$/256		

NOTES

[1]Temperature range is as follows: A Version, –40°C to +85°C; S Version –55°C to +125°C. See also Note 18.

[2]Applies after calibration at the temperature of interest.

[3]Positive full-scale error applies to both unipolar and bipolar input ranges.

[4]These errors will be of the order of the output noise of the part as shown in Table I after system calibration. These errors will be 20 µV typical after self-calibration or background calibration.

[5]Recalibration at any temperature or use of the background calibration mode will remove these drift errors.

[6]These numbers are guaranteed by design and/or characterization.

[7]This common-mode voltage range is allowed, provided that the input voltage on AIN1(+) and AIN1(–) does not exceed AV_{DD} + 30 mV and V_{SS} – 30 mV.

[8]The AIN1 analog input presents a very high impedance dynamic load that varies with clock frequency and input sample rate. The maximum recommended source resistance depends on the selected gain (see Tables IV and V).

[9]The analog input voltage range on the AIN1(+) input is given here with respect to the voltage on the AIN1(–) input. The input voltage range on the AIN2 input is with respect to AGND. The absolute voltage on the AIN1 input should not go more positive than AV_{DD} + 30 mV or more negative than V_{SS} – 30 mV.

[10]V_{REF} = REF IN(+) – REF IN(–).

[11]This error can be removed using the system calibration capabilities of the AD7712. This error is not removed by the AD7712's self-calibration features. The offset drift on the AIN2 input is 4 times the value given in the Static Performance section.

[12]The reference input voltage range may be restricted by the input voltage range requirement on the V_{BIAS} input.

SPECIFICATIONS (continued)

Parameter	A, S Versions[1]	Unit	Conditions/Comments
REFERENCE OUTPUT			
Output Voltage	2.5	V nom	
Initial Tolerance	±1	% max	
Drift	20	ppm/°C typ	
Output Noise	30	µV typ	pk-pk Noise; 0.1 Hz to 10 Hz Bandwidth
Line Regulation (AV_{DD})	1	mV/V max	
Load Regulation	1.5	mV/mA max	Maximum Load Current 1 mA
External Current	1	mA max	
V_{BIAS} INPUT[13]			
Input Voltage Range	$AV_{DD} - 0.85 \times V_{REF}$		See V_{BIAS} Input Section
	or $AV_{DD} - 3.5$	V max	Whichever Is Smaller: +5 V/–5 V or +10 V/0 V Nominal AV_{DD}/V_{SS}
	or $AV_{DD} - 2.1$	V max	Whichever Is Smaller: +5 V/0 V Nominal AV_{DD}/V_{SS}
	$V_{SS} + 0.85 \times V_{REF}$		See V_{BIAS} Input Section
	or $V_{SS} + 3$	V min	Whichever Is Greater: +5 V/–5 V or +10 V/0 V Nominal AV_{DD}/V_{SS}
	or $V_{SS} + 2.1$	V min	Whichever Is Greater: +5 V/0 V Nominal AV_{DD}/V_{SS}
V_{BIAS} Rejection	65 to 85	dB typ	Increasing with Gain
LOGIC INPUTS			
Input Current	±10	µA max	
All Inputs except MCLK IN			
V_{INL}, Input Low Voltage	0.8	V max	
V_{INH}, Input High Voltage	2.0	V min	
MCLK IN Only			
V_{INL}, Input Low Voltage	0.8	V max	
V_{INH}, Input High Voltage	3.5	V min	
LOGIC OUTPUTS			
V_{OL}, Output Low Voltage	0.4	V max	I_{SINK} = 1.6 mA
V_{OH}, Output High Voltage	4.0	V min	I_{SOURCE} = 100 µA
Floating State Leakage Current	±10	µA max	
Floating State Output Capacitance[14]	9	pF typ	
TRANSDUCER BURNOUT			
Current	4.5	µA nom	
Initial Tolerance	±10	% typ	
Drift	0.1	%/°C typ	
SYSTEM CALIBRATION			
AIN1			
Positive Full-Scale Calibration Limit[15]	$(1.05 \times V_{REF})$/GAIN	V max	GAIN Is the Selected PGA Gain (Between 1 and 128)
Negative Full-Scale Calibration Limit[15]	$-(1.05 \times V_{REF})$/GAIN	V max	GAIN Is the Selected PGA Gain (Between 1 and 128)
Offset Calibration Limit[16, 17]	$-(1.05 \times V_{REF})$/GAIN	V max	GAIN Is the Selected PGA Gain (Between 1 and 128)
Input Span[15]	$0.8 \times V_{REF}$/GAIN	V min	GAIN Is the Selected PGA Gain (Between 1 and 128)
	$(2.1 \times V_{REF})$/GAIN	V max	GAIN Is the Selected PGA Gain (Between 1 and 128)
AIN2			
Positive Full-Scale Calibration Limit[15]	$(4.2 \times V_{REF})$/GAIN	V max	GAIN Is the Selected PGA Gain (Between 1 and 128)
Negative Full-Scale Calibration Limit[15]	$-(4.2 \times V_{REF})$/GAIN	V max	GAIN Is the Selected PGA Gain (Between 1 and 128)
Offset Calibration Limit[17]	$-(4.2 \times V_{REF})$/GAIN	V max	GAIN Is the Selected PGA Gain (Between 1 and 128)
Input Span[15]	$3.2 \times V_{REF}$/GAIN	V min	GAIN Is the Selected PGA Gain (Between 1 and 128)
	$(8.4 \times V_{REF})$/GAIN	V max	GAIN Is the Selected PGA Gain (Between 1 and 128)

NOTES

[13]The AD7712 is tested with the following V_{BIAS} voltages. With AV_{DD} = 5 V and V_{SS} = 0 V, V_{BIAS} = 2.5 V; with AV_{DD} = 10 V and V_{SS} = 0 V, V_{BIAS} = 5 V and with AV_{DD} = 5 V and V_{SS} = –5 V, V_{BIAS} = 0 V.

[14]Guaranteed by design, not production tested.

[15]After calibration, if the analog input exceeds positive full scale, the converter will output all 1s. If the analog input is less than negative full scale, then the device will output all 0s.

[16]These calibration and span limits apply provided the absolute voltage on the AIN1 analog inputs does not exceed AV_{DD} + 30 mV or does not go more negative than V_{SS} – 30 mV.

[17]The offset calibration limit applies to both the unipolar zero point and the bipolar zero point.

AD7712–SPECIFICATIONS

Parameter	A, S Versions[1]	Unit	Conditions/Comments
POWER REQUIREMENTS			
Power Supply Voltages			
AV_{DD} Voltage[18]	+5 to +10	V nom	±5% for Specified Performance
DV_{DD} Voltage[19]	+5	V nom	±5% for Specified Performance
$AV_{DD} - V_{SS}$ Voltage	+10.5	V max	For Specified Performance
Power Supply Currents			
AV_{DD} Current	4	mA max	
DV_{DD} Current	4.5	mA max	
V_{SS} Current	1.5	mA max	V_{SS} = –5 V
Power Supply Rejection[20]			Rejection w.r.t. AGND; Assumes V_{BIAS} Is Fixed
Positive Supply (AV_{DD} and DV_{DD})[21]		dB typ	
Negative Supply (V_{SS})	90	dB typ	
Power Dissipation			
Normal Mode	45	mW max	$AV_{DD} = DV_{DD}$ = +5 V, V_{SS} = 0 V; Typically 25 mW
Normal Mode	52.5	mW max	$AV_{DD} = DV_{DD}$ = +5 V, V_{SS} = –5 V; Typically 30 mW
Standby (Power-Down) Mode[22]	200	µW max	$AV_{DD} = DV_{DD}$ = +5 V, V_{SS} = 0 V or –5 V; Typically 100 µW

NOTES

[18]The AD7712 is specified with a 10 MHz clock for AV_{DD} voltages of +5 V ± 5%. It is specified with an 8 MHz clock for AV_{DD} voltages greater than 5.25 V and less than 10.5 V. Operating with AV_{DD} voltages in the range 5.25 V to 10.5 V is guaranteed only over the 0°C to 70°C temperature range.

[19]The ±5% tolerance on the DV_{DD} input is allowed provided that DV_{DD} does not exceed AV_{DD} by more than 0.3 V.

[20]Measured at dc and applies in the selected passband. PSRR at 50 Hz will exceed 120 dB with filter notches of 10 Hz, 25 Hz, or 50 Hz. PSRR at 60 Hz will exceed 120 dB with filter notches of 10 Hz, 30 Hz, or 60 Hz.

[21]PSRR depends on gain: gain of 1 = 70 dB typ; gain of 2 = 75 dB typ; gain of 4 = 80 dB typ; gains of 8 to 128 = 85 dB typ. These numbers can be improved (to 95 dB typ) by deriving the V_{BIAS} voltage (via Zener diode or reference) from the AV_{DD} supply.

[22]Using the hardware STANDBY pin. Standby power dissipation using the software standby bit (PD) of the Control Register is 8 mW typ.

Specifications subject to change without notice.

ABSOLUTE MAXIMUM RATINGS*

(T_A = 25°C, unless otherwise noted.)

AV_{DD} to DV_{DD} . . . . . –0.3 V to +12 V
AV_{DD} to V_{SS} . . . . . –0.3 V to +12 V
AV_{DD} to AGND . . . . . –0.3 V to +12 V
AV_{DD} to DGND . . . . . –0.3 V to +12 V
DV_{DD} to AGND . . . . . –0.3 V to +6 V
DV_{DD} to DGND . . . . . –0.3 V to +6 V
V_{SS} to AGND . . . . . +0.3 V to –6 V
V_{SS} to DGND . . . . . +0.3 V to –6 V
AIN1 Input Voltage to AGND . . . V_{SS} – 0.3 V to AV_{DD} + 0.3 V
Reference Input Voltage to AGND . . V_{SS} – 0.3 V to AV_{DD} + 0.3 V
REF OUT to AGND . . . . . –0.3 V to AV_{DD}
Digital Input Voltage to DGND . . . . . –0.3 V to AV_{DD} + 0.3 V
Digital Output Voltage to DGND . . . . –0.3 V to DV_{DD} + 0.3 V
Operating Temperature Range
Commercial (A Version) . . . . . –40°C to +85°C
Extended (S Version) . . . . . –55°C to +125°C
Storage Temperature Range . . . . . –65°C to +150°C
Lead Temperature (Soldering, 10 secs) . . . . . 300°C
Power Dissipation (Any Package) to 75°C . . . . . 450 mW

*Stresses above those listed under Absolute Maximum Ratings may cause permanent damage to the device. This is a stress rating only; functional operation of the device at these or any other conditions above those listed in the operational sections of the specification is not implied. Exposure to absolute maximum rating conditions for extended periods may affect device reliability.

ORDERING GUIDE

Model	Temperature Range	Package Options*
AD7712AN	–40°C to +85°C	N-24
AD7712AR	–40°C to +85°C	RW-24
AD7712AR-REEL	–40°C to +85°C	RW-24
AD7712AR-REEL7	–40°C to +85°C	RW-24
AD7712AQ	–40°C to +85°C	Q-24
AD7712SQ	–55°C to +125°C	Q-24
EVAL-AD7712EB	Evaluation Board	

*N = PDIP, Q = CERDIP; RW = SOIC.

CAUTION

ESD (electrostatic discharge) sensitive device. Electrostatic charges as high as 4000 V readily accumulate on the human body and test equipment and can discharge without detection. Although the AD7712 features proprietary ESD protection circuitry, permanent damage may occur on devices subjected to high energy electrostatic discharges. Therefore, proper ESD precautions are recommended to avoid performance degradation or loss of functionality.

TIMING CHARACTERISTICS[1, 2] (DV_{DD} = +5 V ± 5%; AV_{DD} = +5 V or +10 V[3] ± 5%; V_{SS} = 0 V or –5 V ± 5%; AGND = DGND = 0 V; f_{CLKIN} =10 MHz; Input Logic 0 = 0 V, Logic 1 = DV_{DD}, unless otherwise noted.)

Parameter	Limit at T_{MIN}, T_{MAX} (A, S Versions)	Unit	Conditions/Comments
$f_{CLK\ IN}$[4, 5]			Master Clock Frequency: Crystal Oscillator or Externally Supplied
	400	kHz min	AV_{DD} = 5 V ± 5%
	10	MHz max	For Specified Performance
	8	MHz	AV_{DD} = 5.25 V to 10.5 V
$t_{CLK\ IN\ LO}$	0.4 × $t_{CLK\ IN}$	ns min	Master Clock Input Low Time; $t_{CLK\ IN}$ = 1/$f_{CLK\ IN}$
$t_{CLK\ IN\ HI}$	0.4 × $t_{CLK\ IN}$	ns min	Master Clock Input High Time
t_r[6]	50	ns max	Digital Output Rise Time; Typically 20 ns
t_f[6]	50	ns max	Digital Output Fall Time; Typically 20 ns
t_1	1000	ns min	$\overline{SYNC}$ Pulse Width
Self-Clocking Mode			
t_2	0	ns min	$\overline{DRDY}$ to $\overline{RFS}$ Setup Time; $t_{CLK\ IN}$ = 1/$f_{CLK\ IN}$
t_3	0	ns min	$\overline{DRDY}$ to $\overline{RFS}$ Hold Time
t_4	2 × $t_{CLK\ IN}$	ns min	A0 to $\overline{RFS}$ Setup Time
t_5	0	ns min	A0 to $\overline{RFS}$ Hold Time
t_6	4 × $t_{CLK\ IN}$ + 20	ns max	$\overline{RFS}$ Low to SCLK Falling Edge
t_7[7]	4 × $t_{CLK\ IN}$ + 20	ns max	Data Access Time ($\overline{RFS}$ Low to Data Valid)
t_8[7]	$t_{CLK\ IN}$/2	ns min	SCLK Falling Edge to Data Valid Delay
	$t_{CLK\ IN}$/2 + 30	ns max	
t_9	$t_{CLK\ IN}$/2	ns nom	SCLK High Pulse Width
t_{10}	3 × $t_{CLK\ IN}$/2	ns nom	SCLK Low Pulse Width
t_{14}	50	ns min	A0 to $\overline{TFS}$ Setup Time
t_{15}	0	ns min	A0 to $\overline{TFS}$ Hold Time
t_{16}	4 × $t_{CLK\ IN}$ + 20	ns max	$\overline{TFS}$ to SCLK Falling Edge Delay Time
t_{17}	4 × $t_{CLK\ IN}$	ns min	$\overline{TFS}$ to SCLK Falling Edge Hold Time
t_{18}	0	ns min	Data Valid to SCLK Setup Time
t_{19}	10	ns min	Data Valid to SCLK Hold Time

NOTES

[1]Guaranteed by design, not production tested. Sample tested during initial release and after any redesign or process change that may affect this parameter. All input signals are specified with tr = tf = 5 ns (10% to 90% of 5 V) and timed from a voltage level of 1.6 V.

[2]See Figures 11 to 14.

[3]The AD7712 is specified with a 10 MHz clock for AV_{DD} voltages of 5 V ± 5%. It is specified with an 8 MHz clock for AV_{DD} voltages greater than 5.25 V and less than 10.5 V.

[4]CLK IN duty cycle range is 45% to 55%. CLK IN must be supplied whenever the AD7712 is not in STANDBY mode. If no clock is present in this case, the device can draw higher current than specified and possibly become uncalibrated.

[5]The AD7712 is production tested with $f_{CLK\ IN}$ at 10 MHz (8 MHz for AV_{DD} < 5.25 V). It is guaranteed by characterization to operate at 400 kHz.

[6]Specified using 10% and 90% points on waveform of interest.

[7]These numbers are measured with the load circuit of Figure 1 and defined as the time required for the output to cross 0.8 V or 2.4 V.

TIMING CHARACTERISTICS (continued)

Parameter	Limit at T_{MIN}, T_{MAX} (A, S Versions)	Unit	Conditions/Comments
External Clocking Mode			
f_{SCLK}	$f_{CLK\ IN}/5$	MHz max	Serial Clock Input Frequency
t_{20}	0	ns min	$\overline{DRDY}$ to $\overline{RFS}$ Setup Time
t_{21}	0	ns min	$\overline{DRDY}$ to $\overline{RFS}$ Hold Time
t_{22}	$2 \times t_{CLK\ IN}$	ns min	A0 to $\overline{RFS}$ Setup Time
t_{23}	0	ns min	A0 to $\overline{RFS}$ Hold Time
t_{24}[7]	$4 \times t_{CLK\ IN}$	ns max	Data Access Time ($\overline{RFS}$ Low to Data Valid)
t_{25}[7]	10	ns min	SCLK Falling Edge to Data Valid Delay
	$2 \times t_{CLK\ IN} + 20$	ns max	
t_{26}	$2 \times t_{CLK\ IN}$	ns min	SCLK High Pulse Width
t_{27}	$2 \times t_{CLK\ IN}$	ns min	SCLK Low Pulse Width
t_{28}	$t_{CLK\ IN} + 10$	ns max	SCLK Falling Edge to $\overline{DRDY}$ High
t_{29}[8]	10	ns min	SCLK to Data Valid Hold Time
	$t_{CLK\ IN} + 10$	ns max	
t_{30}	10	ns min	$\overline{RFS}/\overline{TFS}$ to SCLK Falling Edge Hold Time
t_{31}[8]	$5 \times t_{CLK\ IN}/2 + 50$	ns max	$\overline{RFS}$ to Data Valid Hold Time
t_{32}	0	ns min	A0 to $\overline{TFS}$ Setup Time
t_{33}	0	ns min	A0 to $\overline{TFS}$ Hold Time
t_{34}	$4 \times t_{CLK\ IN}$	ns min	SCLK Falling Edge to $\overline{TFS}$ Hold Time
t_{35}	$2 \times t_{CLK\ IN}$ – SCLK High	ns min	Data Valid to SCLK Setup Time
t_{36}	30	ns min	Data Valid to SCLK Hold Time

NOTES

[8]These numbers are derived from the measured time taken by the data output to change 0.5 V when loaded with the circuit of Figure 1. The measured number is then extrapolated back to remove effects of charging or discharging the 100 pF capacitor. This means that the times quoted in the timing characteristics are the true bus relinquish times of the part and, as such, are independent of external bus loading capacitances.

Specifications subject to change without notice.

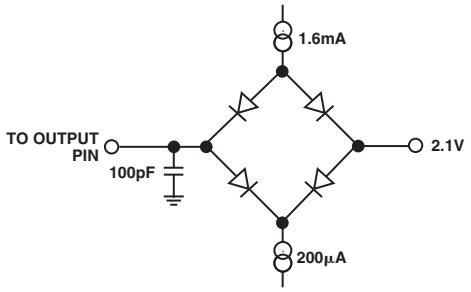

Figure 1. Load Circuit for Access Time and Bus Relinquish Time

PIN CONFIGURATION
DIP and SOIC

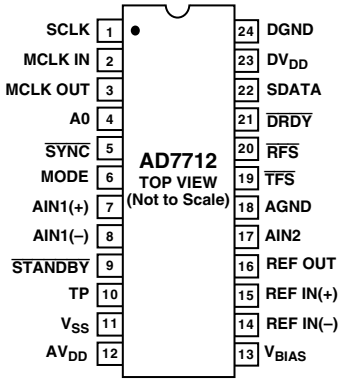

PIN FUNCTION DESCRIPTION

Pin	Mnemonic	Function
1	SCLK	Serial Clock. Logic input/output, depending on the status of the MODE pin. When MODE is high, the device is in its self-clocking mode, and the SCLK pin provides a serial clock output. This SCLK becomes active when $\overline{RFS}$ or $\overline{TFS}$ goes low, and it goes high impedance when either $\overline{RFS}$ or $\overline{TFS}$ returns high or when the device has completed transmission of an output word. When MODE is low, the device is in its external clocking mode, and the SCLK pin acts as an input. This input serial clock can be a continuous clock with all data transmitted in a continuous train of pulses. Alternatively, it can be a noncontinuous clock with the information being transmitted to the AD7712 in smaller batches of data.
2	MCLK IN	Master Clock Signal for the Device. This can be provided in the form of a crystal or external clock. A crystal can be tied across the MCLK IN and MCLK OUT pins. Alternatively, the MCLK IN pin can be driven with a CMOS-compatible clock and MCLK OUT left unconnected. The clock input frequency is nominally 10 MHz.
3	MCLK OUT	When the master clock for the device is a crystal, the crystal is connected between MCLK IN and MCLK OUT.
4	A0	Address Input. With this input low, reading and writing to the device is to the control register. With this input high, access is to either the data register or the calibration registers.
5	$\overline{SYNC}$	Logic Input. Allows for synchronization of the digital filters when using a number of AD7712s. It resets the nodes of the digital filter.
6	MODE	Logic Input. When this pin is high, the device is in its self-clocking mode. With this pin low, the device is in its external clocking mode.
7	AIN1(+)	Analog Input Channel 1. Positive input of the programmable gain differential analog input. The AIN1(+) input is connected to an output current source that can be used to check that an external transducer has burned out or gone open circuit. This output current source can be turned on/off via the control register.
8	AIN1(–)	Analog Input Channel 1. Negative input of the programmable gain differential analog input.
9	$\overline{STANDBY}$	Logic Input. Taking this pin low shuts down the internal analog and digital circuitry, reducing power consumption to less than 50 µW.
10	TP	Test Pin. Used when testing the device. Do not connect anything to this pin.
11	V_{SS}	Analog Negative Supply, 0 V to –5 V. Tied to AGND for single-supply operation. The input voltage on AIN1 should not go > 30 mV negative w.r.t. V_{SS} for correct operation of the device.
12	AV_{DD}	Analog Positive Supply Voltage, 5 V to 10 V.
13	V_{BIAS}	Input Bias Voltage. This input voltage should be set such that $V_{BIAS} + 0.85 \times V_{REF} < AV_{DD}$ and $V_{BIAS} - 0.85 \times V_{REF} > V_{SS}$ where V_{REF} is REF IN(+) – REF IN(–). Ideally, this should be tied halfway between AV_{DD} and V_{SS}. Thus, with AV_{DD} = +5 V and V_{SS} = 0 V, it can be tied to REF OUT; with AV_{DD} = +5 V and V_{SS} = –5 V, it can be tied to AGND, while with AV_{DD} = +10 V, it can be tied to +5 V.
14	REF IN(–)	Reference Input. The REF IN(–) can lie anywhere between AV_{DD} and V_{SS} provided REF IN(+) is greater than REF IN(–).
15	REF IN(+)	Reference Input. The reference input is differential providing that REF IN(+) is greater than REF IN(–). REF IN(+) can lie anywhere between AV_{DD} and V_{SS}.
16	REF OUT	Reference Output. The internal 2.5 V reference is provided at this pin. This is a single-ended output that is referred to AGND.
17	AIN2	Analog Input Channel 2. High level analog input that accepts an analog input voltage range of $\pm 4 \times V_{REF}$/GAIN. At the nominal V_{REF} of +2.5 V and a gain of 1, the AIN2 input voltage range is ±10 V.
18	AGND	Ground Reference Point for Analog Circuitry.
19	$\overline{TFS}$	Transmit Frame Synchronization. Active low logic input used to write serial data to the device with serial data expected after the falling edge of this pulse. In the self-clocking mode, the serial clock becomes active after $\overline{TFS}$ goes low. In the external clocking mode, $\overline{TFS}$ must go low before the first bit of the data-word is written to the part.
20	$\overline{RFS}$	Receive Frame Synchronization. Active low logic input used to access serial data from the device. In the self-clocking mode, both the SCLK and SDATA lines become active after $\overline{RFS}$ goes low. In the external clocking mode, the SDATA line becomes active after $\overline{RFS}$ goes low.

Pin	Mnemonic	Function
21	$\overline{\text{DRDY}}$	Logic Output. A falling edge indicates that a new output word is available for transmission. The $\overline{\text{DRDY}}$ pin will return high upon completion of transmission of a full output word. $\overline{\text{DRDY}}$ is also used to indicate when the AD7712 has completed its on-chip calibration sequence.
22	SDATA	Serial Data. Input/output with serial data being written to either the control register or the calibration registers and serial data being accessed from the control register, calibration registers, or the data register. During an output data read operation, serial data becomes active after $\overline{\text{RFS}}$ goes low (provided $\overline{\text{DRDY}}$ is low). During a write operation, valid serial data is expected on the rising edges of SCLK when $\overline{\text{TFS}}$ is low. The output data coding is natural binary for unipolar inputs and offset binary for bipolar inputs.
23	DV_{DD}	Digital Supply Voltage, 5 V. DV_{DD} should not exceed AV_{DD} by more than 0.3 V in normal operation.
24	DGND	Ground Reference Point for Digital Circuitry.

TERMINOLOGY

Integral Nonlinearity

This is the maximum deviation of any code from a straight line passing through the endpoints of the transfer function. The endpoints of the transfer function are zero-scale (not to be confused with bipolar zero), a point 0.5 LSB below the first code transition (000 . . . 000 to 000 . . . 001) and full scale, a point 0.5 LSB above the last code transition (111 . . . 110 to 111 . . . 111). The error is expressed as a percentage of full scale.

Positive Full-Scale Error

Positive full-scale error is the deviation of the last code transition (111 . . . 110 to 111 . . . 111) from the ideal input full-scale voltage. For AIN1(+), the ideal full-scale input voltage is (AIN1(–) + V_{REF}/GAIN – 3/2 LSBs); for AIN2, the ideal full-scale voltage is +4 × V_{REF}/GAIN – 3/2 LSBs. Positive full-scale error applies to both unipolar and bipolar analog input ranges.

Unipolar Offset Error

Unipolar offset error is the deviation of the first code transition from the ideal voltage. For AIN1(+), the ideal input voltage is (AIN1(–) + 0.5 LSB); for AIN2, the ideal input is 0.5 LSB when operating in the unipolar mode.

Bipolar Zero Error

This is the deviation of the midscale transition (0111 . . . 111 to 1000 . . . 000) from the ideal input voltage. For AIN1(+), the ideal input voltage is (AIN1(–) – 0.5 LSB); for AIN2, the ideal input is –0.5 LSB when operating in the bipolar mode.

Bipolar Negative Full-Scale Error

This is the deviation of the first code transition from the ideal input voltage. For AIN1(+), the ideal input voltage is (AIN1(–) – V_{REF}/GAIN + 0.5 LSB); for AIN2, the ideal input voltage is (–4 × V_{REF}/GAIN + 0.5 LSB) when operating in the bipolar mode.

Positive Full-Scale Overrange

Positive full-scale overrange is the amount of overhead available to handle input voltages on AIN1(+) input greater than (AIN1(–) + V_{REF}/GAIN) or on the AIN2 of greater than +4 × V_{REF}/GAIN (for example, noise peaks or excess voltages due to system gain errors in system calibration routines) without introducing errors due to overloading the analog modulator or to overflowing the digital filter.

Negative Full-Scale Overrange

This is the amount of overhead available to handle voltages on AIN1(+) below (AIN1(–) – V_{REF}/GAIN) or on AIN2 below –4 × V_{REF}/GAIN without overloading the analog modulator or overflowing the digital filter. Note that the analog input will accept negative voltage peaks on AIN1(+) even in the unipolar mode provided that AIN1(+) is greater than AIN1(–) and greater than V_{SS} – 30 mV.

Offset Calibration Range

In the system calibration modes, the AD7712 calibrates its offset with respect to the analog input. The offset calibration range specification defines the range of voltages that the AD7712 can accept and still accurately calibrate offset.

Full-Scale Calibration Range

This is the range of voltages that the AD7712 can accept in the system calibration mode and still correctly calibrate full scale.

Input Span

In system calibration schemes, two voltages applied in sequence to the AD7712's analog input define the analog input range. The input span specification defines the minimum and maximum input voltages from zero to full scale that the AD7712 can accept and still accurately calibrate gain.

Control Register (24 Bits)

A write to the device with the A0 input low writes data to the control register. A read to the device with the A0 input low accesses the contents of the control register. The control register is 24 bits wide and when writing to the register 24 bits of data must be written otherwise the data will not be loaded to the control register. In other words, it is not possible to write just the first 12 bits of data into the control register. If more than 24 clock pulses are provided before $\overline{TFS}$ returns high, then all clock pulses after the 24th clock pulse are ignored. Similarly, a read operation from the control register should access 24 bits of data.

MSB

MD2	**MD1**	**MD0**	**G2**	**G1**	**G0**	**CH**	**PD**	**WL**	**X**	**BO**	**B/U**
FS11	**FS10**	**FS9**	**FS8**	**FS7**	**FS6**	**FS5**	**FS4**	**FS3**	**FS2**	**FS1**	**FS0**

X = Don't Care. **LSB**

Operating Mode			
MD2	**MD1**	**MD0**	**Operating Mode**
0	0	0	Normal Mode. This is the normal mode of operation of the device whereby a read to the device accesses data from the data register. This is the default condition of these bits after the internal power-on reset.
0	0	1	Activate Self-Calibration. This activates self-calibration on the channel selected by CH. This is a one-step calibration sequence, and when complete, the part returns to normal mode (with MD2, MD1, MD0 of the control registers returning to 0, 0, 0). The $\overline{DRDY}$ output indicates when this self-calibration is complete. For this calibration type, the zero-scale calibration is done internally on shorted (zeroed) inputs, and the full-scale calibration is done on V_{REF}.
0	1	0	Activate System Calibration. This activates system calibration on the channel selected by CH. This is a two-step calibration sequence, with the zero-scale calibration done first on the selected input channel and $\overline{DRDY}$ indicating when this zero-scale calibration is complete. The part returns to normal mode at the end of this first step in the two-step sequence.
0	1	1	Activate System Calibration. This is the second step of the system calibration sequence with full-scale calibration being performed on the selected input channel. Once again, $\overline{DRDY}$ indicates when the full-scale calibration is complete. When this calibration is complete, the part returns to normal mode.
1	0	0	Activate System Offset Calibration. This activates system offset calibration on the channel selected by CH. This is a one-step calibration sequence and, when complete, the part returns to normal mode with $\overline{DRDY}$ indicating when this system offset calibration is complete. For this calibration type, the zero-scale calibration is done on the selected input channel, and the full-scale calibration is done internally on V_{REF}.
1	0	1	Activate Background Calibration. This activates background calibration on the channel selected by CH. If the background calibration mode is on, then the AD7712 provides continuous self-calibration of the reference and shorted (zeroed) inputs. This calibration takes place as part of the conversion sequence, extending the conversion time and reducing the word rate by a factor of 6. Its major advantage is that the user does not have to worry about recalibrating the device when there is a change in the ambient temperature. In this mode, the shorted (zeroed) inputs and V_{REF}, as well as the analog input voltage, are continuously monitored, and the calibration registers of the device are automatically updated.
1	1	0	Read/Write Zero-Scale Calibration Coefficients. A read to the device with A0 high accesses the contents of the zero-scale calibration coefficients of the channel selected by CH. A write to the device with A0 high writes data to the zero-scale calibration coefficients of the channel selected by CH. The word length for reading and writing these coefficients is 24 bits, regardless of the status of the WL bit of the control register. Therefore, when writing to the calibration register, 24 bits of data must be written; otherwise the new data will not be transferred to the calibration register.
1	1	1	Read/Write Full-Scale Calibration Coefficients. A read to the device with A0 high accesses the contents of the full-scale calibration coefficients of the channel selected by CH. A write to the device with A0 high writes data to the full-scale calibration coefficients of the channel selected by CH. The word length for reading and writing these coefficients is 24 bits, regardless of the status of the WL bit of the control register. Therefore, when writing to the calibration register, 24 bits of data must be written; otherwise the new data will not be transferred to the calibration register.

PGA Gain

G2	Gl	G0	Gain	
0	0	0	1	(Default Condition after the Internal Power-On Reset)
0	0	1	2	
0	1	0	4	
0	1	1	8	
1	0	0	16	
1	0	1	32	
1	1	0	64	
1	1	1	128	

Channel Selection

CH	Channel		
0	AIN1	Low Level Input	(Default Condition after the Internal Power-On Reset)
1	AIN2	High Level Input	

Power-Down

PD		
0	Normal Operation	(Default Condition after the Internal Power-On Reset)
1	Power-Down	

Word Length

WL	Output Word Length	
0	16-Bit	(Default Condition after Internal Power-On Reset)
1	24-Bit	

Burnout Current

BO		
0	Off	(Default Condition after Internal Power-On Reset)
1	On	

Bipolar/Unipolar Selection (Both Inputs)

B/U		
0	Bipolar	(Default Condition after Internal Power-On Reset)
1	Unipolar	

Filter Selection (FS11–FS0)

The on-chip digital filter provides a sinc^3 (or $(\sin x/x)^3$) filter response. The 12 bits of data programmed into these bits determine the filter cutoff frequency, the position of the first notch of the filter, and the data rate for the part. In association with the gain selection, it also determines the output noise (and therefore the effective resolution) of the device.

The first notch of the filter occurs at a frequency determined by the relationship filter first notch frequency = $(f_{CLK\ IN}/512)/code$ where *code* is the decimal equivalent of the code in bits FS0 to FS11 and is in the range 19 to 2,000. With the nominal $f_{CLK\ IN}$ of 10 MHz, this results in a first notch frequency range from 9.76 Hz to 1.028 kHz. To ensure correct operation of the AD7712, the value of the code loaded to these bits must be within this range. Failure to do this will result in unspecified operation of the device.

Changing the filter notch frequency, as well as the selected gain, impacts resolution. Tables I and II and Figure 2 show the effect of the filter notch frequency and gain on the effective resolution of the AD7712. The output data rate (or effective conversion time) for the device is equal to the frequency selected for the first notch of the filter. For example, if the first notch of the filter is selected at 50 Hz, then a new word is available at a 50 Hz rate or every 20 ms. If the first notch is at 1 kHz, a new word is available every 1 ms.

The settling time of the filter to a full-scale step input change is worst case 4 × 1/(output data rate). This settling time is to 100% of the final value. For example, with the first filter notch at 50 Hz, the settling time of the filter to a full-scale step input change is 80 ms max. If the first notch is at 1 kHz, the settling time of the filter to a full-scale input step is 4 ms max. This settling time can be reduced to 3 × l/(output data rate) by synchronizing the step input change to a reset of the digital filter. In other words, if the step input takes place with $\overline{SYNC}$ low, the settling time will be 3 × l/(output data rate). If a change of channels takes place, the settling time is 3 × l/(output data rate) regardless of the $\overline{SYNC}$ input.

The –3 dB frequency is determined by the programmed first notch frequency according to the relationship filter –3 dB frequency = 0.262 × first notch frequency.

Tables I and II show the output rms noise for some typical notch and –3 dB frequencies. The numbers given are for the bipolar input ranges with a V_{REF} of 2.5 V. These numbers are typical and are generated with an analog input voltage of 0 V. The output noise from the part comes from two sources. First, there is the electrical noise in the semiconductor devices used in the implementation of the modulator (device noise). Second, when the analog input signal is converted into the digital domain, quantization noise is added. The device noise is at a low level and is largely independent of frequency. The quantization noise starts at an even lower level but rises rapidly with increasing frequency to become the dominant noise source. Consequently, lower filter notch settings (below 60 Hz approximately) tend to be device noise dominated while higher notch settings are dominated by quantization noise. Changing the filter notch and cutoff frequency in the quantization noise dominated region results in a more dramatic improvement in noise performance than it does in the device noise dominated region as shown in Table I. Furthermore, quantization noise is added after the PGA, so effective resolution is independent of gain for the higher filter notch frequencies. Meanwhile, device noise is added in the PGA and, therefore, effective resolution suffers a little at high gains for lower notch frequencies.

At the lower filter notch settings (below 60 Hz), the no missing codes performance of the device is at the 24-bit level. At the higher settings, more codes will be missed until at the 1 kHz notch setting; no missing codes performance is guaranteed only to the 12-bit level. However, since the effective resolution of the part is 10.5 bits for this filter notch setting, this no missing codes performance should be more than adequate for all applications.

The effective resolution of the device is defined as the ratio of the output rms noise to the input full scale. This does not remain constant with increasing gain or with increasing bandwidth. Table II is the same as Table I except that the output is expressed in terms of effective resolution (the magnitude of the rms noise with respect to 2 × V_{REF}/GAIN, i.e., the input full scale). It is possible to do post filtering on the device to improve the output data rate for a given –3 dB frequency and to further reduce the output noise (see the Digital Filtering section).

Table I. Output Noise vs. Gain and First Notch Frequency

First Notch of Filter and O/P Data Rate[1]	–3 dB Frequency	Typical Output RMS Noise (μV)							
		Gain of 1	Gain of 2	Gain of 4	Gain of 8	Gain of 16	Gain of 32	Gain of 64	Gain of 128
10 Hz[2]	2.62 Hz	1.0	0.78	0.48	0.33	0.25	0.25	0.25	0.25
25 Hz[2]	6.55 Hz	1.8	1.1	0.63	0.5	0.44	0.41	0.38	0.38
30 Hz[2]	7.86 Hz	2.5	1.31	0.84	0.57	0.46	0.43	0.4	0.4
50 Hz[2]	13.1 Hz	4.33	2.06	1.2	0.64	0.54	0.46	0.46	0.46
60 Hz[2]	15.72 Hz	5.28	2.36	1.33	0.87	0.63	0.62	0.6	0.56
100 Hz[3]	26.2 Hz	13	6.4	3.7	1.8	1.1	0.9	0.65	0.65
250 Hz[3]	65.5 Hz	130	75	25	12	7.5	4	2.7	1.7
500 Hz[3]	131 Hz	0.6×10^3	0.26×10^3	140	70	35	25	15	8
1 kHz[3]	262 Hz	3.1×10^3	1.6×10^3	0.7×10^3	0.29×10^3	180	120	70	40

NOTES
[1]The default condition (after the internal power-on reset) for the first notch of filter is 60 Hz.
[2]For these filter notch frequencies, the output rms noise is primarily dominated by device noise, and, as a result, is independent of the value of the reference voltage. Therefore, increasing the reference voltage will give an increase in the effective resolution of the device (i.e., the ratio of the rms noise to the input full scale is increased since the output rms noise remains constant as the input full scale increases).
[3]For these filter notch frequencies, the output rms noise is dominated by quantization noise, and, as a result, is proportional to the value of the reference voltage.

Table II. Effective Resolution vs. Gain and First Notch Frequency

First Notch of Filter and O/P Data Rate	–3 dB Frequency	Effective Resolution* (Bits)							
		Gain of 1	Gain of 2	Gain of 4	Gain of 8	Gain of 16	Gain of 32	Gain of 64	Gain of 128
10 Hz	2.62 Hz	22.5	21.5	21.5	21	20.5	19.5	18.5	17.5
25 Hz	6.55 Hz	21.5	21	21	20	19.5	18.5	17.5	16.5
30 Hz	7.86 Hz	21	21	20.5	20	19.5	18.5	17.5	16.5
50 Hz	13.1 Hz	20	20	20	20	19	18.5	17.5	16.5
60 Hz	15.72 Hz	20	20	20	19.5	19	18	17	16
100 Hz	26.2 Hz	18.5	18.5	18.5	18.5	18	17.5	17	16
250 Hz	65.5 Hz	15	15.5	15.5	15.5	15.5	15.5	15	14.5
500 Hz	131 Hz	13	13	13	13	13	12.5	12.5	12.5
1 kHz	262 Hz	10.5	10.5	11	11	11	10.5	10	10

*Effective resolution is defined as the magnitude of the output rms noise with respect to the input full scale (i.e., 2 × V_{REF}/GAIN). The above table applies for a V_{REF} of 2.5 V and resolution numbers are rounded to the nearest 0.5 LSB.

Figures 2a and 2b give information similar to that outlined in Table I. In these plots, the output rms noise is shown for the full range of available cutoffs frequencies rather than for some typical cutoff frequencies as in Tables I and II. The numbers given in these plots are typical values at 25°C.

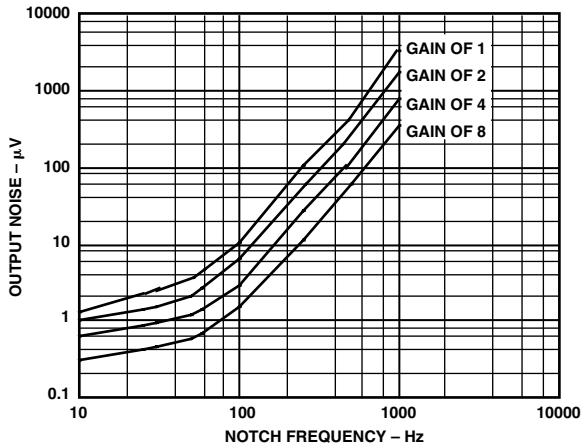

Figure 2a. Plot of Output Noise vs. Gain and Notch Frequency (Gains of 1 to 8)

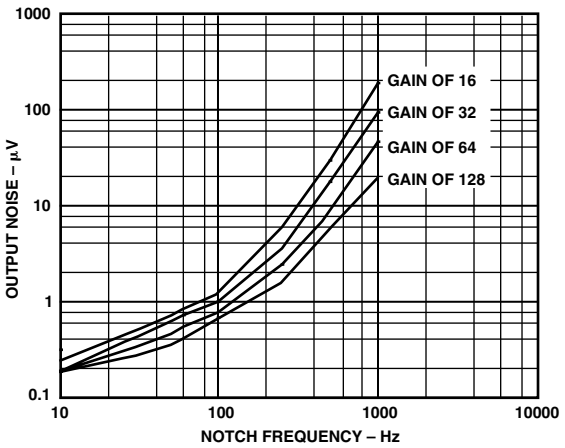

Figure 2b. Plot of Output Noise vs. Gain and Notch Frequency (Gains of 16 to 128)

CIRCUIT DESCRIPTION

The AD7712 is a sigma-delta A/D converter with on-chip digital filtering, intended for the measurement of wide dynamic range, low frequency signals such as those in industrial control or process control applications. It contains a sigma-delta (or charge-balancing) ADC, a calibration microcontroller with on-chip static RAM, a clock oscillator, a digital filter, and a bidirectional serial communications port.

The part contains two analog input channels, one programmable gain differential input, and one programmable gain high level single-ended input. The gain range on both inputs is from 1 to 128. For the AIN1 input, this means that the input can accept unipolar signals of between 0 mV and 20 mV and 0 mV and +2.5 V or bipolar signals in the range from ±20 mV to ±2.5 V when the reference input voltage equals 2.5 V. The input voltage range for the AIN2 input is $\pm 4 \times V_{REF}$/GAIN and is ±10 V with the nominal reference of 2.5 V and a gain of 1. The input signal to the selected analog input channel is continuously sampled at a rate determined by the frequency of the master clock, MCLK IN, and the selected gain (see Table III). A chargebalancing A/D converter (sigma-delta modulator) converts the sampled signal into a digital pulse train whose duty cycle contains the digital information. The programmable gain function on the analog input is also incorporated in this sigma-delta modulator with the input sampling frequency being modified to give the higher gains. A sinc^3 digital low-pass filter processes the output of the sigma-delta modulator and updates the output register at a rate determined by the first notch frequency of this filter. The output data can be read from the serial port randomly or periodically at any rate up to the output register update rate. The first notch of this digital filter (and therefore its –3 dB frequency) can be programmed via an on-chip control register. The programmable range for this first notch frequency is from 9.76 Hz to 1.028 kHz, giving a programmable range for the –3 dB frequency of 2.58 Hz to 269 Hz.

The basic connection diagram for the part is shown in Figure 3. This shows the AD7712 in the external clocking mode with both the AV_{DD} and DV_{DD} pins of the AD7712 being driven from the analog 5 V supply. Some applications will have separate supplies for both AV_{DD} and DV_{DD}, and in some of these cases, the analog supply will exceed the 5 V digital supply (see the Power Supplies and Grounding section).

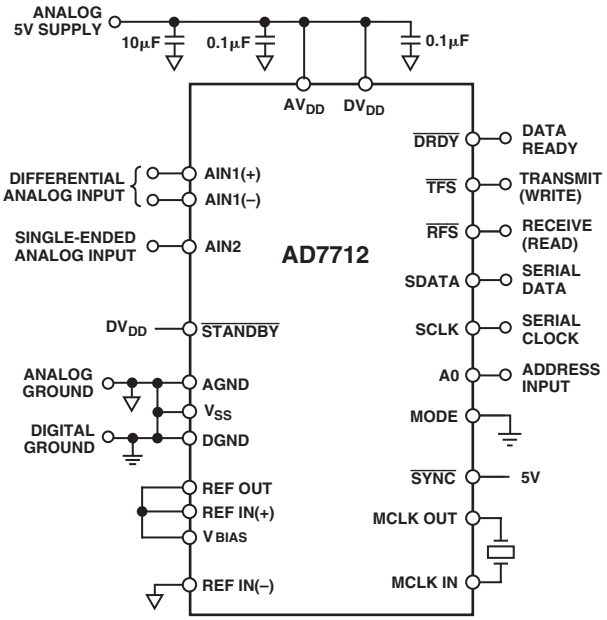

Figure 3. Basic Connection Diagram

The AD7712 provides a number of calibration options that can be programmed via the on-chip control register. A calibration cycle can be initiated at any time by writing to this control register. The part can perform self-calibration using the on-chip calibration microcontroller and SRAM to store calibration parameters. Other system components can also be included in the calibration loop to remove offset and gain errors in the input channel using the system calibration mode. Another option is a background calibration mode where the part continuously performs self-calibration and updates the calibration coefficients. Once the part is in this mode, the user does not have to worry about issuing periodic calibration commands to the device or asking the device to recalibrate when there is a change in the ambient temperature or power supply voltage.

The AD7712 gives the user access to the on-chip calibration registers, allowing the microprocessor to read the device's calibration coefficients and also to write its own calibration coefficients to the part from prestored values in E^2PROM. This gives the microprocessor much greater control over the AD7712's calibration procedure. It also means that the user can verify that the device has performed its calibration correctly by comparing the coefficients after calibration with prestored values in E^2PROM.

The AD7712 can be operated in single-supply systems, provided that the analog input voltage on the AIN1 input does not go more negative than –30 mV. For larger bipolar signals on the AIN1 input, a V_{SS} of –5 V is required by the part. For battery operation or low power systems, the AD7712 offers a standby mode (controlled by the $\overline{\text{STANDBY}}$ pin) that reduces idle power consumption to typically 100 µW.

THEORY OF OPERATION

The general block diagram of a sigma-delta ADC is shown in Figure 4. It contains the following elements:

- A sample-hold amplifier
- A differential amplifier or subtracter
- An analog low-pass filter
- A 1-bit A/D converter (comparator)
- A 1-bit DAC
- A digital low-pass filter

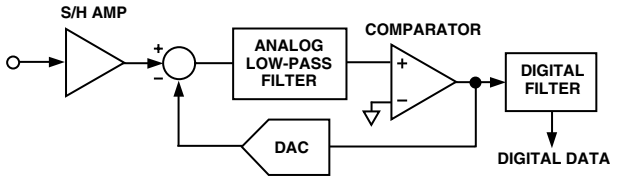

Figure 4. General Sigma-Delta ADC

In operation, the analog signal sample is fed to the subtracter, along with the output of the 1-bit DAC. The filtered difference signal is fed to the comparator, whose output samples the difference signal at a frequency many times that of the analog signal sampling frequency (oversampling).

Oversampling is fundamental to the operation of sigma-delta ADCs. Using the quantization noise formula for an ADC:

$$SNR = (6.02\ 3\ number\ of\ bits + 1.76)\ dB$$

A 1-bit ADC or comparator yields an SNR of 7.78 dB.

The AD7712 samples the input signal at a frequency of 39 kHz or greater (see Table III). As a result, the quantization noise is spread over a much wider frequency than that of the band of interest. The noise in the band of interest is reduced still further by analog filtering in the modulator loop, which shapes the quantization noise spectrum to move most of the noise energy to frequencies outside the bandwidth of interest. The noise performance is thus improved from this 1-bit level to the performance outlined in Tables I and II and in Figure 2.

The output of the comparator provides the digital input for the 1-bit DAC, so that the system functions as a negative feedback loop that tries to minimize the difference signal. The digital data that represents the analog input voltage is contained in the duty cycle of the pulse train appearing at the output of the comparator. It can be retrieved as a parallel binary data-word using a digital filter.

Sigma-delta ADCs are generally described by the order of the analog low-pass filter. A simple example of a first-order sigma-delta ADC is shown in Figure 5. This contains only a first order low-pass filter or integrator. It also illustrates the derivation of the alternative name for these devices: charge-balancing ADCs.

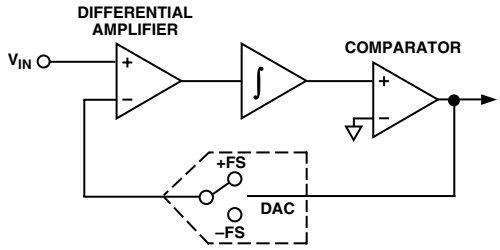

Figure 5. Basic Charge-Balancing ADC

It consists of a differential amplifier (whose output is the difference between the analog input and the output of a 1-bit DAC), an integrator, and a comparator. The term *charge balancing*, comes from the fact that this system is a negative feedback loop that tries to keep the net charge on the integrator capacitor at zero by balancing charge injected by the input voltage with charge injected by the 1-bit DAC. When the analog input is zero, the only contribution to the integrator output comes from the 1-bit DAC. For the net charge on the integrator capacitor to be zero, the DAC output must spend half its time at +FS and half its time at –FS. Assuming ideal components, the duty cycle of the comparator will be 50%.

When a positive analog input is applied, the output of the 1-bit DAC must spend a larger proportion of the time at +FS, so the duty cycle of the comparator increases. When a negative input voltage is applied, the duty cycle decreases.

The AD7712 uses a second-order sigma-delta modulator and a digital filter that provides a rolling average of the sampled output. After power-up, or if there is a step change in the input voltage, there is a settling time that must elapse before valid data is obtained.

Input Sample Rate

The modulator sample frequency for the device remains at $f_{CLK\ IN}/512$ (19.5 kHz @ $f_{CLK\ IN}$ = 10 MHz) regardless of the selected gain. However, gains greater than ×1 are achieved by a combination of multiple input samples per modulator cycle and scaling the ratio of reference capacitor to input capacitor. As a result of the multiple sampling, the input sample rate of the device varies with the selected gain (see Table III). The effective input impedance is $1/C \times f_S$ where *C* is the input sampling capacitance and f_S is the input sample rate.

Table III. Input Sampling Frequency vs. Gain

Gain	Input Sampling Frequency (f_S)
1	$f_{CLK\ IN}/256$ (39 kHz @ $f_{CLK\ IN}$ = 10 MHz)
2	$2 \times f_{CLK\ IN}/256$ (78 kHz @ $f_{CLK\ IN}$ = 10 MHz)
4	$4 \times f_{CLK\ IN}/256$ (156 kHz @ $f_{CLK\ IN}$ = 10 MHz)
8	$8 \times f_{CLK\ IN}/256$ (312 kHz @ $f_{CLK\ IN}$ = 10 MHz)
16	$8 \times f_{CLK\ IN}/256$ (312 kHz @ $f_{CLK\ IN}$ = 10 MHz)
32	$8 \times f_{CLK\ IN}/256$ (312 kHz @ $f_{CLK\ IN}$ = 10 MHz)
64	$8 \times f_{CLK\ IN}/256$ (312 kHz @ $f_{CLK\ IN}$ = 10 MHz)
128	$8 \times f_{CLK\ IN}/256$ (312 kHz @ $f_{CLK\ IN}$ = 10 MHz)

DIGITAL FILTERING

The AD7712's digital filter behaves like a similar analog filter, with a few minor differences.

First, since digital filtering occurs after the A-to-D conversion process, it can remove noise injected during the conversion process. Analog filtering cannot do this.

On the other hand, analog filtering can remove noise superimposed on the analog signal before it reaches the ADC. Digital filtering cannot do this, and noise peaks riding on signals near full scale have the potential to saturate the analog modulator and digital filter, even though the average value of the signal is within limits. To alleviate this problem, the AD7712 has overrange headroom built into the sigma-delta modulator and digital filter, which allows overrange excursions of 5% above the analog input range. If noise signals are larger than this, consideration should be given to analog input filtering, or to reducing the input channel voltage so that its full scale is half that of the analog input channel full scale. This will provide an overrange capability greater than 100% at the expense of reducing the dynamic range by 1 bit (50%).

Filter Characteristics

The cutoff frequency of the digital filter is determined by the value loaded to bits FS0 to FS11 in the control register. At the maximum clock frequency of 10 MHz, the minimum cutoff frequency of the filter is 2.58 Hz while the maximum programmable cutoff frequency is 269 Hz.

Figure 6 shows the filter frequency response for a cutoff frequency of 2.62 Hz, which corresponds to a first filter notch frequency of 10 Hz. This is a $(\sin x/x)^3$ response (also called sinc^3), that provides >100 dB of 50 Hz and 60 Hz rejection. Programming a different cutoff frequency via FS0–FS11 does not alter the profile of the filter response; it changes the frequency of the notches as outlined in the Control Register section.

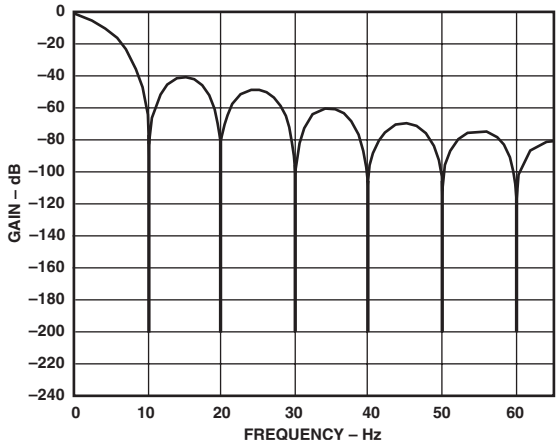

Figure 6. Frequency Response of AD7712 Filter

Since the AD7712 contains this on-chip, low-pass filtering, there is a settling time associated with step function inputs, and data on the output will be invalid after a step change until the settling time has elapsed. The settling time depends upon the notch frequency chosen for the filter. The output data rate equates to this filter notch frequency, and the settling time of the filter to a full-scale step input is four times the output data period. In applications using both input channels, the settling time of the filter must be allowed to elapse before data from the second channel is accessed.

Post Filtering

The on-chip modulator provides samples at a 19.5 kHz output rate. The on-chip digital filter decimates these samples to provide data at an output rate that corresponds to the programmed first notch frequency of the filter. Since the output data rate exceeds the Nyquist criterion, the output rate for a given bandwidth will satisfy most application requirements. However, there may be some applications that require a higher data rate for a given bandwidth and noise performance. Applications that need this higher data rate will require some post filtering following the digital filter of the AD7712.

For example, if the required bandwidth is 7.86 Hz but the required update rate is 100 Hz, the data can be taken from the AD7712 at the 100 Hz rate giving a –3 dB bandwidth of 26.2 Hz. Post filtering can be applied to this to reduce the bandwidth and output noise, to the 7.86 Hz bandwidth level, while maintaining an output rate of 100 Hz.

Post filtering can also be used to reduce the output noise from the device for bandwidths below 2.62 Hz. At a gain of 128, the output rms noise is 250 nV. This is essentially device noise or white noise, and since the input is chopped, the noise has a flat frequency response. By reducing the bandwidth below 2.62 Hz, the noise in the resultant passband can be reduced. A reduction in bandwidth by a factor of 2 results in a $\sqrt{2}$ reduction in the output rms noise. This additional filtering will result in a longer settling time.

Antialias Considerations

The digital filter does not provide any rejection at integer multiples of the modulator sample frequency (n × 19.5 kHz, where n = 1, 2, 3 . . .). This means that there are frequency bands, $\pm f_{3\,dB}$ wide ($f_{3\,dB}$ is cutoff frequency selected by FS0 to FS11), where noise passes unattenuated to the output. However, due to the AD7712's high oversampling ratio, these bands occupy only a small fraction of the spectrum, and most broadband noise is filtered. In any case, because of the high oversampling ratio, a simple, RC, single-pole filter is generally sufficient to attenuate the signals in these bands on the analog input and thus provide adequate antialiasing filtering.

If passive components are placed in front of the AIN1 input of the AD7712, care must be taken to ensure that the source impedance is low enough so as not to introduce gain errors in the system. The dc input impedance for the AIN1 input is over 1 GΩ. The input appears as a dynamic load that varies with the clock frequency and with the selected gain (see Figure 7). The input sample rate, as shown in Table III, determines the time allowed for the analog input capacitor, C_{IN}, to be charged. External impedances result in a longer charge time for this capacitor, which may result in gain errors being introduced on the analog inputs. Table IV shows the allowable external resistance/capacitance values such that no gain error to the 16-bit level is introduced, while Table V shows the allowable external resistance/capacitance values such that no gain error to the 20-bit level is introduced. Both inputs of the differential input channels (AIN1) look into similar input circuitry.

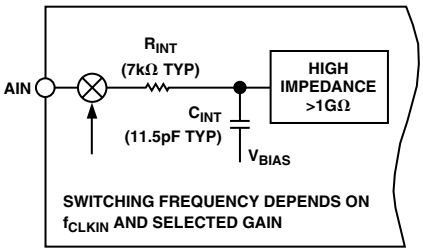

Figure 7. AIN1 Input Impedance

Table IV. Typical External Series Resistance That Will Not Introduce 16-Bit Gain Error

	External Capacitance (pF)					
Gain	**0**	**50**	**100**	**500**	**1000**	**5000**
1	184 kΩ	45.3 kΩ	27.1 kΩ	7.3 kΩ	4.1 kΩ	1.1 kΩ
2	88.6 kΩ	22.1 kΩ	13.2 kΩ	3.6 kΩ	2.0 kΩ	560 Ω
4	41.4 kΩ	10.6 kΩ	6.3 kΩ	1.7 kΩ	970 Ω	270 Ω
8–128	17.6 kΩ	4.8 kΩ	2.9 kΩ	790 Ω	440 Ω	120 Ω

Table V. Typical External Series Resistance That Will Not Introduce 20-Bit Gain Error

	External Capacitance (pF)					
Gain	**0**	**50**	**100**	**500**	**1000**	**5000**
1	145 kΩ	34.5 kΩ	20.4 kΩ	5.2 kΩ	2.8 kΩ	700 Ω
2	70.5 kΩ	16.9 kΩ	10 kΩ	2.5 kΩ	1.4 kΩ	350 Ω
4	31.8 kΩ	8.0 kΩ	4.8 kΩ	1.2 kΩ	670 Ω	170 Ω
8–128	13.4 kΩ	3.6 kΩ	2.2 kΩ	550 Ω	300 Ω	80 Ω

The numbers in Tables IV and V assume a full-scale change on the analog input. In any case, the error introduced due to longer charging times is a gain error that can be removed using the system calibration capabilities of the AD7712 provided that the resultant span is within the span limits of the system calibration techniques for the AD7712.

The AIN2 input contains a resistive attenuation network as outlined in Figure 8. The typical input impedance on this input is 44 kΩ. As a result, the AIN2 input should be driven from a low impedance source.

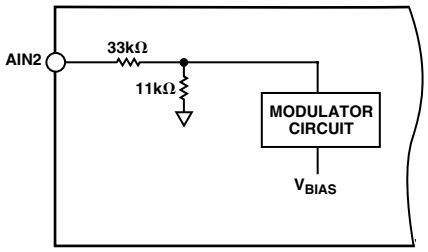

Figure 8. AIN2 Input Impedance

ANALOG INPUT FUNCTIONS

Analog Input Ranges

The analog inputs on the AD7712 provide the user with considerable flexibility in terms of analog input voltage ranges. One of the inputs is a differential, programmable gain, input channel that can handle either unipolar or bipolar input signals. The common-mode range of this input is from V_{SS} to AV_{DD} provided that the absolute value of the analog input voltage lies between V_{SS} – 30 mV and AV_{DD} + 30 mV. The second analog input is a single-ended, programmable gain, high level input that accepts analog input ranges of 0 to +4 × V_{REF}/GAIN or ±4 × V_{REF}/GAIN.

The dc input leakage current on the AIN1 input is 10 pA maximum at 25°C (±1 nA over temperature). This results in a dc offset voltage developed across the source impedance. However, this dc offset effect can be compensated for by a combination of the differential input capability of the part and its system calibration mode. The dc input current on the AIN2 input depends on the input voltage. For the nominal input voltage range of ±10 V, the input current is ±225 µA typ.

Burnout Current

The AIN1(+) input of the AD7712 contains a 4.5 µA current source that can be turned on/off via the control register. This current source can be used in checking that a transducer has not burned out or gone open circuit before attempting to take measurements on that channel. If the current is turned on and is allowed to flow into the transducer and a measurement of the input voltage on the AIN1 input is taken, it can indicate that the transducer is not functioning correctly. For normal operation, this burnout current is turned off by writing a 0 to the BO bit in the control register.

Bipolar/Unipolar Inputs

The two analog inputs on the AD7712 can accept either unipolar or bipolar input voltage ranges. Bipolar or unipolar options are chosen by programming the B/U bit of the control register. This programs both channels for either unipolar or bipolar operation. Programming the part for either unipolar or bipolar operation does not change any of the input signal conditioning; it simply changes the data output coding. The data coding is binary for unipolar inputs and offset binary for bipolar inputs.

The AIN1 input channel is differential and, as a result, the voltage to which the unipolar and bipolar signals are referenced is the voltage on the AIN1(–) input. For example, if AIN1(–) is 1.25 V and the AD7712 is configured for unipolar operation with a gain of 1 and a V_{REF} of 2.5 V, the input voltage range on the AIN1(+) input is 1.25 V to 3.75 V. If AIN1(–) is 1.25 V and the AD7712 is configured for bipolar mode with a gain of 1 and a V_{REF} of 2.5 V, the analog input range on the AIN1(+) input is –1.25 V to +3.75 V. For the AIN2 input, the input signals are referenced to AGND.

REFERENCE INPUT/OUTPUT

The AD7712 contains a temperature compensated 2.5 V reference, which has an initial tolerance of ±1%. This reference voltage is provided at the REF OUT, pin and can be used as the reference voltage for the part by connecting the REF OUT pin to the REF IN(+) pin. This REF OUT pin is a single-ended output, referenced to AGND, which is capable of providing up to 1 mA to an external load. In applications where REF OUT is connected directly to REF IN(+), REF IN(–) should be tied to AGND to provide the nominal 2.5 V reference for the AD7712.

The reference inputs of the AD7712, REF IN(+) and REF IN(–), provide a differential reference input capability. The common-mode range for these differential inputs is from V_{SS} to AV_{DD}. The nominal differential voltage, V_{REF} (REF IN(+) – REF IN(–)), is 2.5 V for specified operation, but the reference voltage can go to 5 V with no degradation in performance provided that the absolute value of REF IN(+) and REF IN(–) does not exceed its AV_{DD} and V_{SS} limits and the V_{BIAS} input voltage range limits are obeyed. The part is also functional with V_{REF} voltages down to 1 V but with degraded performance as the output noise will, in terms of LSB size, be larger. REF IN(+) must always be greater than REF IN(–) for correct operation of the AD7712.

Both reference inputs provide a high impedance, dynamic load similar to the AIN1 analog inputs. The maximum dc input leakage current is 10 pA (±1 nA over temperature), and source resistance may result in gain errors on the part. The reference inputs look like the AIN1 analog input (see Figure 7). In this case, R_{INT} is 5 kΩ typ and C_{INT} varies with gain. The input sample rate is $f_{CLK\ IN}$/256 and does not vary with gain. For gains of 1 to 8, C_{INT} is 20 pF; for a gain of 16, it is 10 pF; for a gain of 32, it is 5 pF; for a gain of 64, it is 2.5 pF; and for a gain of 128, it is 1.25 pF.

The digital filter of the AD7712 removes noise from the reference input just as it does with the analog input, and the same limitations apply regarding lack of noise rejection at integer multiples of the sampling frequency. The output noise performance outlined in Tables I and II assumes a clean reference. If the reference noise in the bandwidth of interest is excessive, it can degrade the performance of the AD7712. Using the on-chip reference as the reference source for the part (i.e., connecting REF OUT to REF IN) results in somewhat degraded output noise performance from the AD7712 for portions of the noise table that are dominated by the device noise. The on-chip reference noise effect is eliminated in ratiometric applications where the reference is used to provide its excitation voltage for the analog front end. The connection scheme shown in Figure 9 between the REF OUT and REF IN pins of the AD7712 is recommended when using the on-chip reference. Recommended reference voltage sources for the AD7712 include the AD780 and AD680 2.5 V references.

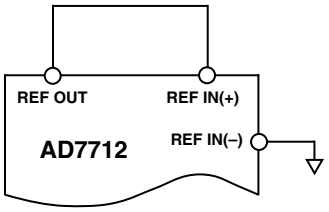

Figure 9. REF OUT/REF IN Connection

V_{BIAS} Input

The V_{BIAS} input determines at what voltage the internal analog circuitry is biased. It essentially provides the return path for analog currents flowing in the modulator, and as such it should be driven from a low impedance point to minimize errors.

For maximum internal headroom, the V_{BIAS} voltage should be set halfway between AV_{DD} and V_{SS}. The difference between AV_{DD} and (V_{BIAS} + 0.85 × V_{REF}) determines the amount of headroom the circuit has at the upper end, while the difference between V_{SS} and (V_{BIAS} – 0.85 × V_{REF}) determines the amount of headroom the circuit has at the lower end. Care should be taken in choosing a V_{BIAS} voltage to ensure that it stays within prescribed limits. For single +5 V operation, the selected V_{BIAS} voltage must ensure that V_{BIAS} ± 0.85 × V_{REF} does not exceed AV_{DD} or V_{SS} or that the V_{BIAS} voltage itself is greater than V_{SS} + 2.1 V and less than AV_{DD} – 2.1 V. For single +10 V operation or dual ±5 V operation, the selected V_{BIAS} voltage must ensure that V_{BIAS} ± 0.85 × V_{REF} does not exceed AV_{DD} or V_{SS} or that the V_{BIAS} voltage itself is greater than V_{SS} + 3 V or less than AV_{DD} – 3 V. For example, with AV_{DD} = +4.75 V, V_{SS} = 0 V and V_{REF} = +2.5 V, the allowable range for the V_{BIAS} voltage is +2.125 V to +2.625 V. With AV_{DD} = +9.5 V, V_{SS} = 0 V and V_{REF} = +5 V, the range for V_{BIAS} is +4.25 V to +5.25 V. With AV_{DD} = +4.75 V, V_{SS} = –4.75 V, and V_{REF} = +2.5 V, the V_{BIAS} range is –2.625 V to +2.625 V.

The V_{BIAS} voltage does have an effect on the AV_{DD} power supply rejection performance of the AD7712. If the V_{BIAS} voltage tracks the AV_{DD} supply, it improves the power supply rejection from the AV_{DD} supply line from 80 dB to 95 dB. Using an external Zener diode connected between the AV_{DD} line and V_{BIAS} as the source for the V_{BIAS} voltage gives the improvement in AV_{DD} power supply rejection performance.

USING THE AD7712

SYSTEM DESIGN CONSIDERATIONS

The AD7712 operates differently from successive approximation ADCs or integrating ADCs. Since it samples the signal continuously, like a tracking ADC, there is no need for a start convert command. The output register is updated at a rate determined by the first notch of the filter, and the output can be read at any time, either synchronously or asynchronously.

Clocking

The AD7712 requires a master clock input, which may be an external TTL/CMOS compatible clock signal applied to the MCLK IN pin with the MCLK OUT pin left unconnected. Alternatively, a crystal of the correct frequency can be connected between MCLK IN and MCLK OUT, in which case the clock circuit will function as a crystal controlled oscillator. For lower clock frequencies, a ceramic resonator may be used instead of the crystal. For these lower frequency oscillators, external capacitors may be required on either the ceramic resonator or on the crystal.

The input sampling frequency, the modulator sampling frequency, the –3 dB frequency, the output update rate, and the calibration time are all directly related to the master clock frequency, $f_{CLK\ IN}$. Reducing the master clock frequency by a factor of 2 will halve the above frequencies and update rate and will double the calibration time.

The current drawn from the DV_{DD} power supply is also directly related to $f_{CLK\ IN}$. Reducing $f_{CLK\ IN}$ by a factor of 2 will halve the DV_{DD} current but will not affect the current drawn from the AV_{DD} power supply.

System Synchronization

If multiple AD7712s are operated from a common master clock, they can be synchronized to update their output registers simultaneously. A falling edge on the $\overline{SYNC}$ input resets the filter and places the AD7712 into a consistent, known state. A common signal to the AD7712's $\overline{SYNC}$ inputs will synchronize their operation. This would normally be done after each AD7712 has performed its own calibration or has had calibration coefficients loaded to it.

The $\overline{SYNC}$ input can also be used to reset the digital filter in systems where the turn-on time of the digital power supply (DV_{DD}) is very long. In such cases, the AD7712 will start operating internally before the DV_{DD} line has reached its minimum operating level, 4.75 V. With a low DV_{DD} voltage, the AD7712's internal digital filter logic does not operate correctly. Thus, the AD7712 may have clocked itself into an incorrect operating condition by the time that DV_{DD} has reached its correct level. The digital filter will be reset upon issue of a calibration command (whether it is self-calibration, system calibration, or background calibration) to the AD7712. This ensures correct operation of the AD7712. In systems where the power-on default conditions of the AD7712 are acceptable, and no calibration is performed after power-on, issuing a $\overline{SYNC}$ pulse to the AD7712 will reset the AD7712's digital filter logic. An R, C on the $\overline{SYNC}$ line, with R, C time constant longer than the DV_{DD} power-on time, will perform the $\overline{SYNC}$ function.

Accuracy

Sigma-delta ADCs, like VFCs and other integrating ADCs, do not contain any source of nonmonotonicity and inherently offer no missing codes performance. The AD7712 achieves excellent linearity by the use of high quality, on-chip silicon dioxide capacitors, which have a very low capacitance/voltage coefficient. The device also achieves low input drift through the use of chopper stabilized techniques in its input stage. To ensure excellent performance over time and temperature, the AD7712 uses digital calibration techniques that minimize offset and gain error.

Autocalibration

Autocalibration on the AD7712 removes offset and gain errors from the device. A calibration routine should be initiated on the device whenever there is a change in the ambient operating temperature or supply voltage. It should also be initiated if there is a change in the selected gain, filter notch, or bipolar/unipolar input range. However, if the AD7712 is in its background calibration mode, the above changes are all automatically taken care of (after the settling time of the filter has been allowed for).

The AD7712 offers self-calibration, system calibration, and background calibration facilities. For calibration to occur on the selected channel, the on-chip microcontroller must record the modulator output for two different input conditions. These are zero-scale and full-scale points. With these readings, the microcontroller can calculate the gain slope for the input to output transfer function of the converter. Internally, the part works with a resolution of 33 bits to determine its conversion result of either 16 bits or 24 bits.

The AD7712 also provides the facility to write to the on-chip calibration registers, and, in this manner, the span and offset for the part can be adjusted by the user. The offset calibration register contains a value that is subtracted from all conversion results, while the full-scale calibration register contains a value that is multiplied by all conversion results. The offset calibration coefficient is subtracted from the result prior to the multiplication by the full-scale coefficient. In the first three modes outlined here, the $\overline{\text{DRDY}}$ line indicates that calibration is complete by going low. If $\overline{\text{DRDY}}$ is low before (or goes low during) the calibration command, it may take up to one modulator cycle before $\overline{\text{DRDY}}$ goes high to indicate that calibration is in progress. Therefore, the $\overline{\text{DRDY}}$ line should be ignored for up to one modulator cycle after the last bit of the calibration command is written to the control register.

Self-Calibration

In the self-calibration mode with a unipolar input range, the zero-scale point used in determining the calibration coefficients is with both inputs shorted (i.e., AIN1(+) = AIN1(–) = V_{BIAS} for AIN1 and AIN2 = V_{BIAS} for AIN2) and the full-scale point is V_{REF}. The zero-scale coefficient is determined by converting an internal shorted inputs node. The full-scale coefficient is determined from the span between this shorted inputs conversion and a conversion on an internal V_{REF} node. The self-calibration mode is invoked by writing the appropriate values (0, 0, 1) to the MD2, MD1, and MD0 bits of the control register. In this calibration mode, the shorted inputs node is switched in to the modulator first and a conversion is performed; the V_{REF} node is then switched in, and another conversion is performed. When the calibration sequence is complete, the calibration coefficients updated and the filter resettled to the analog input voltage, the $\overline{\text{DRDY}}$ output goes low. The self-calibration procedure takes into account the selected gain on the PGA.

For bipolar input ranges in the self-calibrating mode, the sequence is very similar to that just outlined. In this case, the two points that the AD7712 calibrates are midscale (bipolar zero) and positive full scale.

System Calibration

System calibration allows the AD7712 to compensate for system gain and offset errors as well as its own internal errors. System calibration performs the same slope factor calculations as self-calibration but uses voltage values presented by the system to the AIN inputs for the zero-scale and full-scale points. System calibration is a two-step process. The zero-scale point must be presented to the converter first. It must be applied to the converter before the calibration step is initiated and remain stable until the step is complete. System calibration is initiated by writing the appropriate values (0, 1, 0) to the MD2, MD1, and MD0 bits of the control register. The $\overline{\text{DRDY}}$ output from the device will signal when the step is complete by going low. After the zero-scale point is calibrated, the full-scale point is applied and the second step of the calibration process is initiated by again writing the appropriate values (0, 1, 1) to MD2, MD1, and MD0. Again the full-scale voltage must be set up before the calibration is initiated, and it must remain stable throughout the calibration step. $\overline{\text{DRDY}}$ goes low at the end of this second step to indicate that the system calibration is complete. In the unipolar mode, the system calibration is performed between the two endpoints of the transfer function; in the bipolar mode, it is performed between midscale and positive full scale.

This two-step system calibration mode offers another feature. After the sequence has been completed, additional offset or gain calibrations can be performed by themselves to adjust the zero reference point or the system gain. This is achieved by performing the first step of the system calibration sequence (by writing 0, 1, 0 to MD2, MD1, MD0). This will adjust the zero-scale or offset point but will not change the slope factor from what was set during a full system calibration sequence.

System calibration can also be used to remove any errors from an antialiasing filter on the analog input. A simple R, C antialiasing filter on the front end may introduce a gain error on the analog input voltage but the system calibration can be used to remove this error.

System Offset Calibration

System offset calibration is a variation of both the system calibration and self-calibration. In this case, the zero-scale point for the system is presented to the AIN input of the converter. System offset calibration is initiated by writing 1, 0, 0 to MD2, MD1, MD0. The system zero-scale coefficient is determined by converting the voltage applied to the AIN input, while the full-scale coefficient is determined from the span between this AIN conversion and a conversion on V_{REF}. The zero-scale point should be applied to the AIN input for the duration of the calibration sequence. This is a one-step calibration sequence with $\overline{\text{DRDY}}$ going low when the sequence is completed. In the unipolar mode, the system offset calibration is performed between the two endpoints of the transfer function; in the bipolar mode, it is performed between midscale and positive full scale.

Background Calibration

The AD7712 also offers a background calibration mode where the part interleaves its calibration procedure with its normal conversion sequence. In the background calibration mode, the same voltages used as the calibration points in the self-calibration mode are used, i.e., shorted inputs and V_{REF}. The background calibration mode is invoked by writing 1, 0, 1 to MD2, MD1, MD0 of the control register. When invoked, the background calibration mode reduces the output data rate of the AD7712 by a factor of 6, while the –3 dB bandwidth remains unchanged. Its advantage is that the part is continually performing calibration and automatically updating its calibration coefficients. As a result, the effects of temperature drift, supply sensitivity, and time drift on zero-scale and full-scale errors are automatically removed. When the background calibration mode is turned on, the part will remain in this mode until bits MD2, MD1, and MD0 of the control register are changed. With background calibration mode on, the first result from the AD7712 will be incorrect as the full-scale calibration will not have been performed. For a step change on the input, the second output update will have settled to 100% of the final value.

Table VI summarizes the calibration modes and the calibration points associated with them. It also gives the duration from when the calibration is invoked to when valid data is available to the user.

Table VI. Calibration Truth Table

Cal Type	MD2, MD1, MD0	Zero-Scale Cal	Full-Scale Cal	Sequence	Duration
Self-Cal	0, 0, 1	Shorted Inputs	V_{REF}	One-Step	9 × 1/Output Rate
System Cal	0, 1, 0	AIN	–	Two-Step	4 × 1/Output Rate
System Cal	0, 1, 1	–	AIN	Two-Step	4 × 1/Output Rate
System Offset Cal	1, 0, 0	AIN	V_{REF}	One-Step	9 × 1/Output Rate
Background Cal	1, 0, 1	Shorted Inputs	V_{REF}	One-Step	6 × 1/Output Rate

Span and Offset Limits

Whenever a system calibration mode is used, there are limits on the amount of offset and span that can be accommodated. The range of input span in both the unipolar and bipolar modes for AIN1 has a minimum value of $0.8 \times V_{REF}$/GAIN and a maximum value of $2.1 \times V_{REF}$/GAIN. For AIN2, both numbers are a factor of 4 higher.

The amount of offset that can be accommodated depends on whether the unipolar or bipolar mode is being used. This offset range is limited by the requirement that the positive full-scale calibration limit is $\leq 1.05 \times V_{REF}$/GAIN for AIN1. Therefore, the offset range plus the span range cannot exceed $1.05 \times V_{REF}$/GAIN for AIN1. If the span is at its minimum ($0.8 \times V_{REF}$/GAIN), the maximum the offset can be is ($0.25 \times V_{REF}$/GAIN) for AIN1. For AIN2, both ranges are multiplied by a factor of 4.

In the bipolar mode, the system offset calibration range is again restricted by the span range. The span range of the converter in bipolar mode is equidistant around the voltage used for the zero-scale point, thus the offset range plus half the span range cannot exceed ($1.05 \times V_{REF}$/GAIN) for AIN1. If the span is set to $2 \times V_{REF}$/GAIN, the offset span cannot move more than $\pm(0.05 \times V_{REF}$/GAIN) before the endpoints of the transfer function exceed the input overrange limits $\pm(1.05 \times V_{REF}$/GAIN) for AIN1. If the span range is set to the minimum $\pm(0.4 \times V_{REF}$/GAIN), the maximum allowable offset range is $\pm(0.65 \times V_{REF}$/GAIN) for AIN1. Once again, for AIN2, both ranges are multiplied by a factor of 4.

POWER-UP AND CALIBRATION

On power-up, the AD7712 performs an internal reset, which sets the contents of the control register to a known state. However, to ensure correct calibration for the device, a calibration routine should be performed after power-up.

The power dissipation and temperature drift of the AD7712 are low and no warm-up time is required before the initial calibration is performed. However, if an external reference is being used, this reference must have stabilized before calibration is initiated.

Drift Considerations

The AD7712 uses chopper stabilization techniques to minimize input offset drift. Charge injection in the analog switches and dc leakage currents at the sampling node are the primary sources of offset voltage drift in the converter. The dc input leakage current is essentially independent of the selected gain. Gain drift within the converter depends primarily upon the temperature tracking of the internal capacitors. It is not affected by leakage currents.

Measurement errors due to offset drift or gain drift can be eliminated at any time by recalibrating the converter or by operating the part in the background calibration mode. Using the system calibration mode can also minimize offset and gain errors in the signal conditioning circuitry. Integral and differential linearity errors are not significantly affected by temperature changes.

POWER SUPPLIES AND GROUNDING

Since the analog inputs and reference input are differential, most of the voltages in the analog modulator are common-mode voltages. V_{BIAS} provides the return path for most of the analog currents flowing in the analog modulator. As a result, the V_{BIAS} input should be driven from a low impedance to minimize errors due to charging/discharging impedances on this line. When the internal reference is used as the reference source for the part, AGND is the ground return for this reference voltage.

The analog and digital supplies to the AD7712 are independent and separately pinned out to minimize coupling between the analog and digital sections of the device. The digital filter will provide rejection of broadband noise on the power supplies, except at integer multiples of the modulator sampling frequency. The digital supply (DV_{DD}) must not exceed the analog positive supply (AV_{DD}) by more than 0.3 V in normal operation. If separate analog and digital supplies are used, the decoupling scheme shown in Figure 10 is recommended. In systems where AV_{DD} = 5 V and DV_{DD} = 5 V, it is recommended that AV_{DD} and DV_{DD} are driven from the same 5 V supply, although each supply should be decoupled separately as shown in Figure 10. It is preferable that the common supply is the system's analog 5 V supply.

It is also important that power is applied to the AD7712 before signals at REF IN, AIN, or the logic input pins in order to avoid excessive current. If separate supplies are used for the AD7712 and the system digital circuitry, then the AD7712 should be powered up first. If it is not possible to guarantee this, then current limiting resistors should be placed in series with the logic inputs.

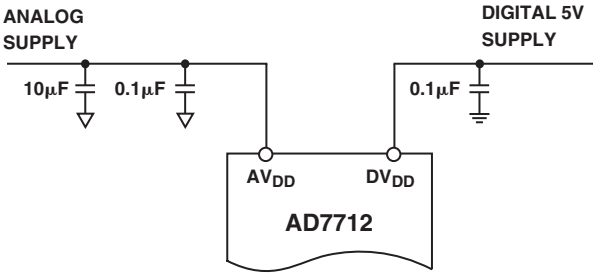

Figure 10. Recommended Decoupling Scheme

DIGITAL INTERFACE

The AD7712's serial communications port provides a flexible arrangement to allow easy interfacing to industry-standard microprocessors, microcontrollers, and digital signal processors. A serial read to the AD7712 can access data from the output register, the control register, or the calibration registers. A serial write to the AD7712 can write data to the control register or the calibration registers.

Two different modes of operation are available, optimized for different types of interfaces where the AD7712 can act either as master in the system (it provides the serial clock) or as slave (an external serial clock can be provided to the AD7712). These two modes, labeled self-clocking mode and external clocking mode, are discussed in detail in the following sections.

Self-Clocking Mode

The AD7712 is configured for its self-clocking mode by tying the MODE pin high. In this mode, the AD7712 provides the serial clock signal used for the transfer of data to and from the AD7712. This self-clocking mode can be used with processors that allow an external device to clock their serial port, including most digital signal processors and microcontrollers such as the 68HC11 and 68HC05. It also allows easy interfacing to serial parallel conversion circuits in systems with parallel data communication, allowing interfacing to 74XX299 universal shift registers without any additional decoding. In the case of shift registers, the serial clock line should have a pull-down resistor instead of the pull-up resistor shown in Figures 11 and 12.

Read Operation

Data can be read from the output register, the control register, or the calibration registers. A0 determines whether the data read accesses data from the control register or from the output/calibration registers. This A0 signal must remain valid for the duration of the serial read operation. With A0 high, data is accessed from either the output register or from the calibration registers. With A0 low, data is accessed from the control register.

The function of the $\overline{\text{DRDY}}$ line is dependent on only the output update rate of the device and the reading of the output data register. $\overline{\text{DRDY}}$ goes low when a new data-word is available in the output data register. It is reset high when the last bit of data (either 16th bit or 24th bit) is read from the output register. If data is not read from the output register, the $\overline{\text{DRDY}}$ line will remain low. The output register will continue to be updated at the output update rate, but $\overline{\text{DRDY}}$ will not indicate this. A read from the device in this circumstance will access the most recent word in the output register. If a new data-word becomes available to the output register while data is being read from the output register, $\overline{\text{DRDY}}$ will not indicate this and the new data-word will be lost to the user. $\overline{\text{DRDY}}$ is not affected by reading from the control register or the calibration registers.

Data can be accessed from the output data register only when $\overline{\text{DRDY}}$ is low. If $\overline{\text{RFS}}$ goes low with $\overline{\text{DRDY}}$ high, no data transfer will take place. $\overline{\text{DRDY}}$ does not have any effect on reading data from the control register or from the calibration registers.

Figure 11 shows a timing diagram for reading from the AD7712 in the self-clocking mode. This read operation shows a read from the AD7712's output data register. A read from the control register or calibration registers is similar, but, in these cases, the $\overline{\text{DRDY}}$ line is not related to the read function. Depending on the output update rate, it can go low at any stage in the control/calibration register read cycle without affecting the read and its status should be ignored. A read operation from either the control or calibration registers must always read 24 bits of data from the respective register.

Figure 11 shows a read operation from the AD7712. For the timing diagram shown, it is assumed that there is a pull-up resistor on the SCLK output. With $\overline{\text{DRDY}}$ low, the $\overline{\text{RFS}}$ input is brought low. $\overline{\text{RFS}}$ going low enables the serial clock of the AD7712 and also places the MSB of the word on the serial data line. All subsequent data bits are clocked out on a high to low transition of the serial clock and are valid prior to the following rising edge of this clock. The final active falling edge of SCLK clocks out the LSB, and this LSB is valid prior to the final active rising edge of SCLK. Coincident with the next falling edge of SCLK, $\overline{\text{DRDY}}$ is reset high. $\overline{\text{DRDY}}$ going high turns off the SCLK and the SDATA outputs, which means that the data hold time for the LSB is slightly shorter than for all other bits.

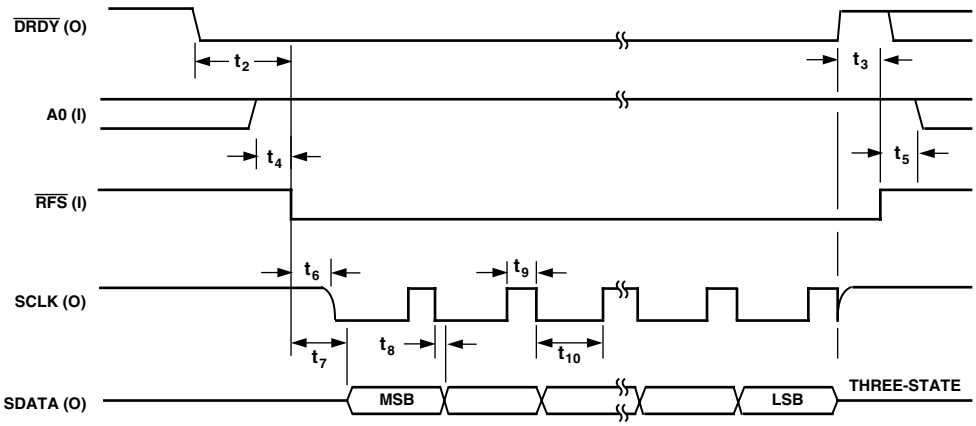

Figure 11. Self-Clocking Mode, Output Data Read Operation

Write Operation

Data can be written to either the control register or calibration registers. In either case, the write operation is not affected by the $\overline{\text{DRDY}}$ line, and the write operation does not have any effect on the status of $\overline{\text{DRDY}}$. A write operation to the control register or the calibration register must always write 24 bits to the respective register.

Figure 12 shows a write operation to the AD7712. A0 determines whether a write operation transfers data to the control register or to the calibration registers. This A0 signal must remain valid for the duration of the serial write operation. The falling edge of $\overline{\text{TFS}}$ enables the internally generated SCLK output. The serial data to be loaded to the AD7712 must be valid on the rising edge of this SCLK signal. Data is clocked into the AD7712 on the rising edge of the SCLK signal, with the MSB transferred first. On the last active high time of SCLK, the LSB is loaded to the AD7712. Subsequent to the next falling edge of SCLK, the SCLK output is turned off. (The timing diagram of Figure 12 assumes a pull-up resistor on the SCLK line.)

External Clocking Mode

The AD7712 is configured for its external clocking mode by tying the MODE pin low. In this mode, SCLK of the AD7712 is configured as an input, and an external serial clock must be provided to this SCLK pin. This external clocking mode is designed for direct interface to systems that provide a serial clock output that is synchronized to the serial data output, including microcontrollers such as the 80C51, 87C51, 68HC11, and 68HC05 and most digital signal processors.

Read Operation

As with the self-clocking mode, data can be read from either the output register, the control register, or the calibration registers. A0 determines whether the data read accesses data from the control register or from the output/calibration registers. This A0 signal must remain valid for the duration of the serial read operation. With A0 high, data is accessed from either the output register or from the calibration registers. With A0 low, data is accessed from the control register.

The function of the $\overline{\text{DRDY}}$ line is dependent on only the output update rate of the device and the reading of the output data register. $\overline{\text{DRDY}}$ goes low when a new data-word is available in the output data register. It is reset high when the last bit of data (either 16th bit or 24th bit) is read from the output register. If data is not read from the output register, the $\overline{\text{DRDY}}$ line will remain low. The output register will continue to be updated at the output update rate, but $\overline{\text{DRDY}}$ will not indicate this. A read from the device in this circumstance will access the most recent word in the output register. If a new data-word becomes available to the output register while data is being read from the output register, $\overline{\text{DRDY}}$ will not indicate this, and the new data-word will be lost to the user. $\overline{\text{DRDY}}$ is not affected by reading from the control register or the calibration register.

Data can be accessed from the output data register only when $\overline{\text{DRDY}}$ is low. If RFS goes low while $\overline{\text{DRDY}}$ is high, no data transfer will take place. $\overline{\text{DRDY}}$ does not have any effect on reading data from the control register or from the calibration registers.

Figures 13a and 13b show timing diagrams for reading from the AD7712 in the external clocking mode. Figure 13a shows a situation where all the data is read from the AD7712 in one read operation. Figure 13b shows a situation where the data is read from the AD7712 over a number of read operations. Both read operations show a read from the AD7712's output data register. Reads from the control register and calibration registers are similar, but, in these cases, the $\overline{\text{DRDY}}$ line is not related to the read function. Depending on the output update rate, it can go low at any stage in the control/calibration register read cycle without affecting the read, and its status should be ignored. A read operation from either the control or calibration registers must always read 24 bits of data from the respective register.

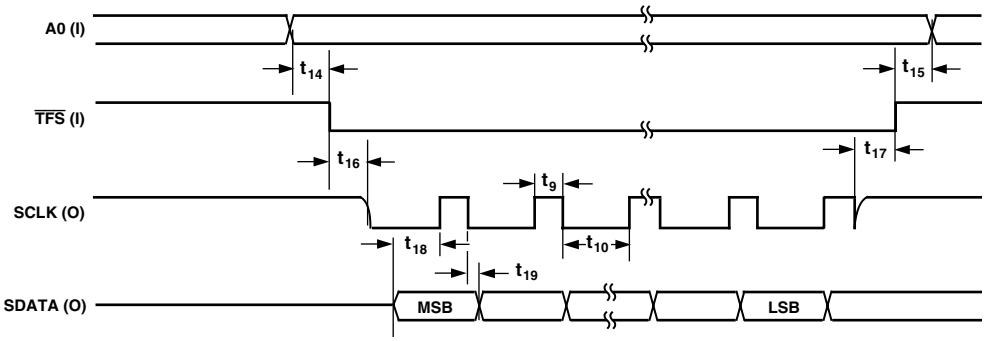

Figure 12. Self-Clocking Mode, Control/Calibration Register Write Operation

Figure 13a shows a read operation from the AD7712 where $\overline{RFS}$ remains low for the duration of the data word transmission. With $\overline{DRDY}$ low, the $\overline{RFS}$ input is brought low. The input SCLK signal should be low between read and write operations. $\overline{RFS}$ going low places the MSB of the word to be read on the serial data line. All subsequent data bits are clocked out on a high to low transition of the serial clock and are valid prior to the following rising edge of this clock. The penultimate falling edge of SCLK clocks out the LSB and the final falling edge resets the $\overline{DRDY}$ line high. This rising edge of $\overline{DRDY}$ turns off the serial data output.

Figure 13b shows a timing diagram for a read operation where $\overline{RFS}$ returns high during the transmission of the word and returns low again to access the rest of the data-word. Timing parameters and functions are very similar to that outlined for Figure 13a, but Figure 13b has a number of additional times to show timing relationships when $\overline{RFS}$ returns high in the middle of transferring a word.

$\overline{RFS}$ should return high during a low time of SCLK. On the rising edge of $\overline{RFS}$, the SDATA output is turned off. $\overline{DRDY}$ remains low and will remain low until all bits of the data-word are read from the AD7712, regardless of the number of times $\overline{RFS}$ changes state during the read operation. Depending on the time between the falling edge of SCLK and the rising edge of $\overline{RFS}$, the next bit (BIT N + 1) may appear on the data bus before $\overline{RFS}$ goes high. When $\overline{RFS}$ returns low again, it activates the SDATA output. When the entire word is transmitted, the $\overline{DRDY}$ line will go high, turning off the SDATA output as per Figure 13a.

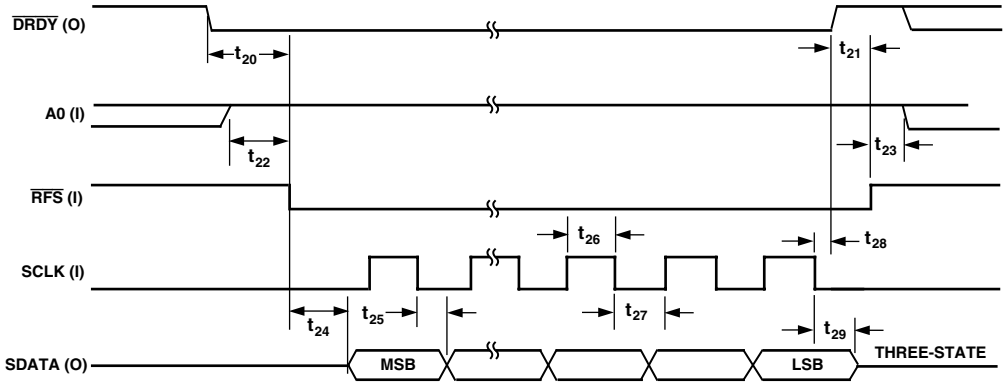

Figure 13a. External Clocking Mode, Output Data Read Operation

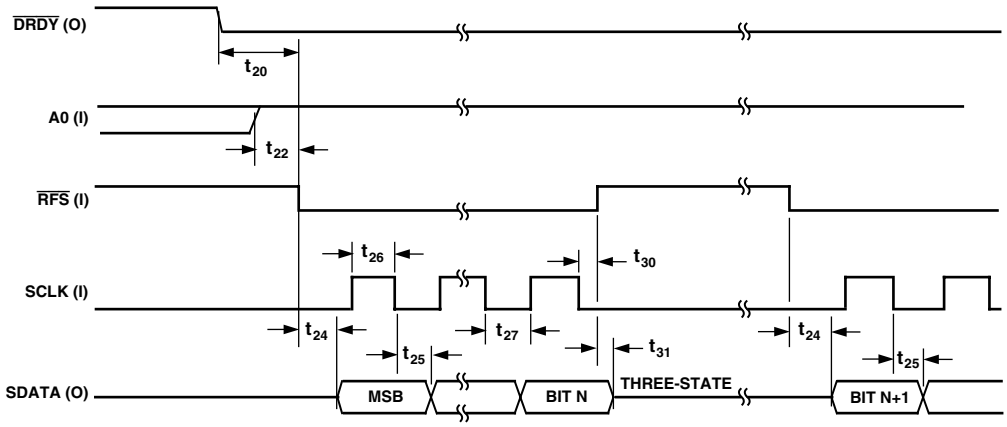

Figure 13b. External Clocking Mode, Output Data Read Operation ($\overline{RFS}$ Returns High during Read Operation)

Write Operation

Data can be written to either the control register or calibration registers. In either case, the write operation is not affected by the $\overline{DRDY}$ line, and the write operation does not have any effect on the status of $\overline{DRDY}$. A write operation to the control register or the calibration register must always write 24 bits to the respective register.

Figure 14a shows a write operation to the AD7712 with $\overline{TFS}$ remaining low for the duration of the write operation. A0 determines whether a write operation transfers data to the control register or to the calibration registers. This A0 signal must remain valid for the duration of the serial write operation. As before, the serial clock line should be low between read and write operations. The serial data to be loaded to the AD7712 must be valid on the high level of the externally applied SCLK signal. Data is clocked into the AD7712 on the high level of this SCLK signal with the MSB transferred first. On the last active high time of SCLK, the LSB is loaded to the AD7712.

Figure 14b shows a timing diagram for a write operation to the AD7712 with $\overline{TFS}$ returning high during the write operation and returning low again to write the rest of the data word. Timing parameters and functions are very similar to that outlined for Figure 14a, but Figure 14b has a number of additional times to show timing relationships when $\overline{TFS}$ returns high in the middle of transferring a word.

Data to be loaded to the AD7712 must be valid prior to the rising edge of the SCLK signal. $\overline{TFS}$ should return high during the low time of SCLK. After $\overline{TFS}$ returns low again, the next bit of the data-word to be loaded to the AD7712 is clocked in on next high level of the SCLK input. On the last active high time of the SCLK input, the LSB is loaded to the AD7712.

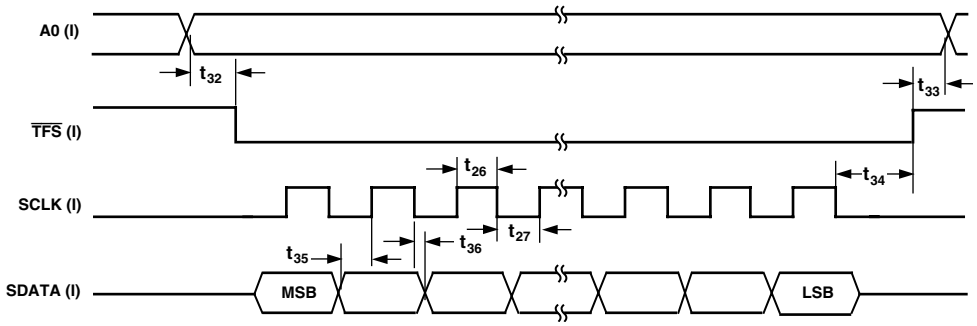

Figure 14a. External Clocking Mode, Control/Calibration Register Write Operation

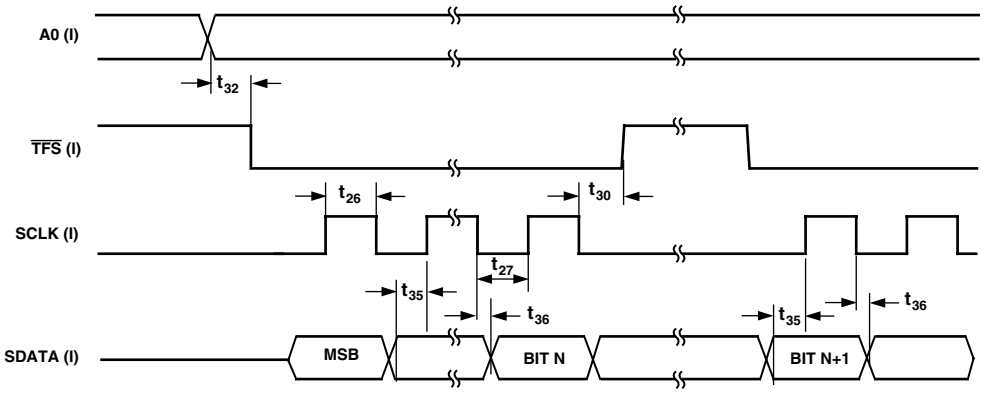

Figure 14b. External Clocking Mode, Control/Calibration Register Write Operation ($\overline{TFS}$ Returns High During Write Operation)

SIMPLIFYING THE EXTERNAL CLOCKING MODE INTERFACE

In many applications, the user may not require the facility of writing to the on-chip calibration registers. In this case, the serial interface to the AD7712 in external clocking mode can be simplified by connecting the $\overline{TFS}$ line to the A0 input of the AD7712 (see Figure 15). This means that any write to the device will load data to the control register (since A0 is low while $\overline{TFS}$ is low), and any read to the device will access data from the output data register or from the calibration registers (since A0 is high while $\overline{RFS}$ is low). It should be noted that in this arrangement the user does not have the capability of reading from the control register.

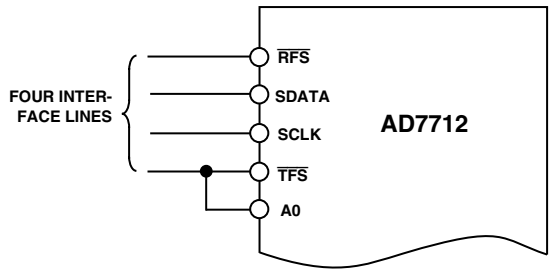

Figure 15. Simplified Interface with $\overline{TFS}$ Connected to A0

Another method of simplifying the interface is to generate the $\overline{TFS}$ signal from an inverted $\overline{RFS}$ signal. However, generating the signals the opposite way around ($\overline{RFS}$ from an inverted $\overline{TFS}$) will cause writing errors.

MICROCOMPUTER/MICROPROCESSOR INTERFACING

The AD7712's flexible serial interface allows easy interface to most microcomputers and microprocessors. Figure 16 shows a flowchart diagram for a typical programming sequence for reading data from the AD7712 to a microcomputer while Figure 17 shows a flowchart diagram for writing data to the AD7712. Figures 18, 19, and 20 show some typical interface circuits.

The flowchart of Figure 16 is for continuous read operations from the AD7712 output register. In the example shown, the $\overline{DRDY}$ line is continuously polled. Depending on the microprocessor configuration, the $\overline{DRDY}$ line may come to an interrupt input, in which case the $\overline{DRDY}$ will automatically generate an interrupt without being polled. Reading the serial buffer could be anything from one read operation up to three read operations (where 24 bits of data are read into an 8-bit serial register). A read operation to the control/calibration registers is similar, but, in this case, the status of $\overline{DRDY}$ can be ignored. The A0 line is brought low when the $\overline{RFS}$ line is brought low when reading from the control register.

The flowchart also shows the bits being reversed after they have been read in from the serial port. This depends on whether the microprocessor expects the MSB of the word first or the LSB of the word first. The AD7712 outputs the MSB first.

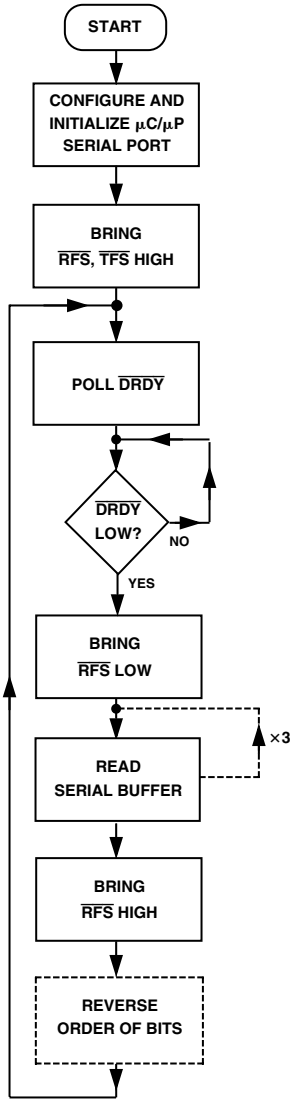

Figure 16. Flowchart for Continuous Read Operations to the AD7712

The flowchart in Figure 17 is for a single 24-bit write operation to the AD7712 control or calibration registers. This shows data being transferred from data memory to the accumulator before being written to the serial buffer. Some microprocessor systems will allow data to be written directly to the serial buffer from data memory. Writing data to the serial buffer from the accumulator will generally consist of either two or three write operations, depending on the size of the serial buffer.

The flowchart also shows the option of the bits being reversed before being written to the serial buffer. This depends on whether the first bit transmitted by the microprocessor is the MSB or the LSB. The AD7712 expects the MSB as the first bit in the data stream. In cases where the data is being read or being written in bytes and the data has to be reversed, the bits will have to be reversed for every byte.

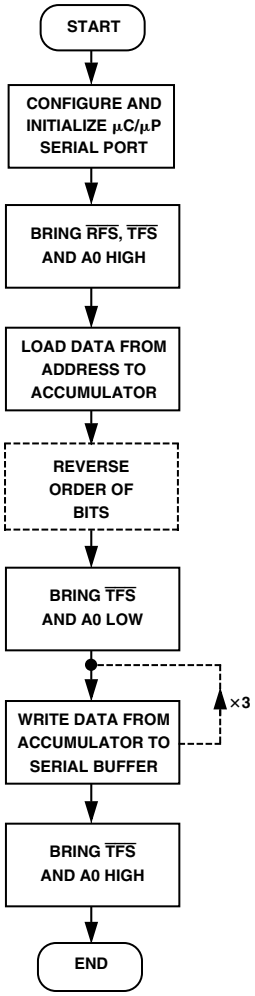

Figure 17. Flowchart for Single Write Operation to the AD7712

AD7712 to 8051 Interface

Figure 18 shows an interface between the AD7712 and the 8XC51 microcontroller. The AD7712 is configured for its external clocking mode, while the 8XC51 is configured in its Mode 0 serial interface mode. The $\overline{\text{DRDY}}$ line from the AD7712 is connected to the Port P1.2 input of the 8XC51, so the $\overline{\text{DRDY}}$ line is polled by the 8XC51. The $\overline{\text{DRDY}}$ line can be connected to the INT1 input of the 8XC51 if an interrupt driven system is preferred.

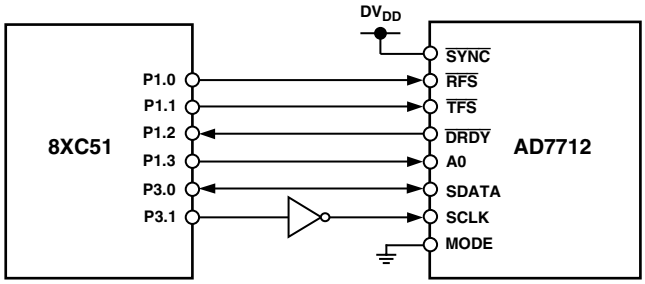

Figure 18. AD7712 to 8XC51 Interface

Table VII shows some typical 8XC51 code used for a single 24-bit read from the output register of the AD7712. Table VIII shows some typical code for a single write operation to the control register of the AD7712. The 8XC51 outputs the LSB first in a write operation while the AD7712 expects the MSB first, so the data to be transmitted has to be rearranged before being written to the output serial register. Similarly, the AD7712 outputs the MSB first during a read operation while the 8XC51 expects the LSB first. Therefore, the data that is read into the serial buffer needs to be rearranged before the correct data-word from the AD7712 is available in the accumulator.

Table VII. 8XC51 Code for Reading from the AD7712

```
 MOV SCON,#00010001B;  Configure 8051 for MODE 0
                       Operation
 MOV IE,#00010000B;    Disable All Interrupts
 SETB 90H;             Set P1.0, Used as RFS
 SETB 91H;             Set P1.1, Used as TFS
 SETB 93H;             Set P1.3, Used as A0
 MOV R1,#003H;         Sets Number of Bytes to Be Read
                       in A Read Operation
 MOV R0,#030H;         Start Address for Where Bytes
                       Will Be Loaded
 MOV R6,#004H;         Use P1.2 as DRDY
WAIT:
 NOP;
 MOV A,P1;             Read Port 1
 ANL A,R6;             Mask Out All Bits Except DRDY
 JZ READ;              If Zero Read
 SJMP WAIT;            Otherwise Keep Polling
READ:
 CLR 90H;              Bring RFS Low
 CLR 98H;              Clear Receive Flag
POLL:
 JB 98H, READ1         Tests Receive Interrupt Flag
 SJMP POLL
READ 1:
 MOV A,SBUF;           Read Buffer
 RLC A;                Rearrange Data
 MOV B.0,C;            Reverse Order of Bits
RLC A; MOV B.1,C; RLC A; MOV B.2,C;
RLC A; MOV B.3,C; RLC A; MOV B.4,C;
RLC A; MOV B.5,C; RLC A; MOV B.6,C;
RLC A; MOV B.7,C;
MOV A,B;
MOV @R0,A;             Write Data to Memory
INC R0;                Increment Memory Location
DEC R1                 Decrement Byte Counter
MOV A,R1
JZ END                 Jump if Zero
JMP WAIT               Fetch Next Byte
END:
 SETB 90H              Bring RFS High
FIN:
 SJMP FIN
```

Table VIII. 8XC51 Code for Writing to the AD7712

MOV SCON,#00000000B;	Configure 8051 for MODE 0 Operation & Enable Serial Reception
MOV IE,#10010000B;	Enable Transmit Interrupt
MOV IP,#00010000B;	Prioritize the Transmit Interrupt
SETB 91H;	Bring $\overline{\text{TFS}}$ High
SETB 90H;	Bring $\overline{\text{RFS}}$ High
MOV R1,#003H;	Sets Number of Bytes to Be Written in a Write Operation
MOV R0,#030H;	Start Address in RAM for Bytes
MOV A,#00H;	Clear Accumulator
MOV SBUF,A;	Initialize the Serial Port
WAIT:	
JMP WAIT;	Wait for Interrupt
INT ROUTINE:	
NOP;	Interrupt Subroutine
MOV A,R1;	Load R1 to Accumulator
JZ FIN;	If Zero Jump to FIN
DEC R1;	Decrement R1 Byte Counter
MOV A,@R;	Move Byte into the Accumulator
INC R0;	Increment Address
RLC A;	Rearrange Data—From LSB First to MSB First
MOV B.0,C; RLC A; MOV B.1,C; RLC A;	
MOV B.2,C; RLC A; MOV B.3,C; RLC A;	
MOV B.4,C; RLC A; MOV B.5,C; RLC A;	
MOV B.6,C; RLC A: MOV B.7,C; MOV A,B;	
CLR 93H;	Bring A0 Low
CLR 91H;	Bring $\overline{\text{TFS}}$ Low
MOV SBUF,A;	Write to Serial Port
RETI;	Return from Subroutine
FIN:	
SETB 91H;	Set $\overline{\text{TFS}}$ High
SETB 93H;	Set A0 High
RETI;	Return from Interrupt Subroutine

AD7712 to 68HC11 Interface

Figure 19 shows an interface between the AD7712 and the 68HC11 microcontroller. The AD7712 is configured for its external clocking mode, while the SPI port is used on the 68HC11, which is in its single-chip mode. The $\overline{\text{DRDY}}$ line from the AD7712 is connected to the Port PC2 input of the 68HC11 so the $\overline{\text{DRDY}}$ line is polled by the 68HC11. The $\overline{\text{DRDY}}$ line can be connected to the $\overline{\text{IRQ}}$ input of the 68HC11, if an interrupt driven system is preferred. The 68HC11 MOSI and MISO lines should be configured for wired-OR operation. Depending on the interface configuration, it may be necessary to provide bidirectional buffers between the 68HC11 MOSI and MISO lines.

The 68HC11 is configured in the master mode with its CPOL bit set to a Logic 0 and its CPHA bit set to a Logic 1. With a 10 MHz master clock on the AD7712, the interface will operate with all four serial clock rates of the 68HC11.

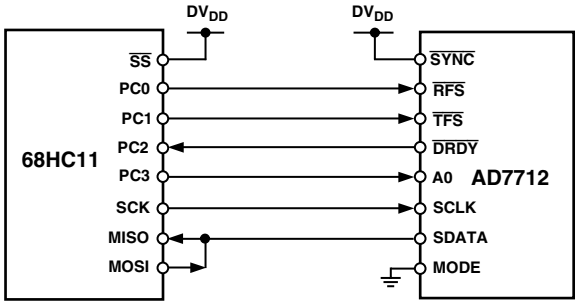

Figure 19. AD7712 to 68HC11 Interface

APPLICATIONS

4–20 mA LOOP

The AD7712's high level input can be used to measure the current in 4–20 mA loop applications as shown in Figure 20. In this case, the system calibration capabilities of the AD7712 can be used to remove the offset caused by the 4 mA flowing through the 500 Ω resistor. The AD7712 can handle an input span as low as 3.2 × V_{REF} (= 8 V with a V_{REF} of 2.5 V) even though the nominal input voltage range for the input is 10 V. Therefore, the full span of the A/D converter can be used for measuring the current between 4 mA and 20 mA.

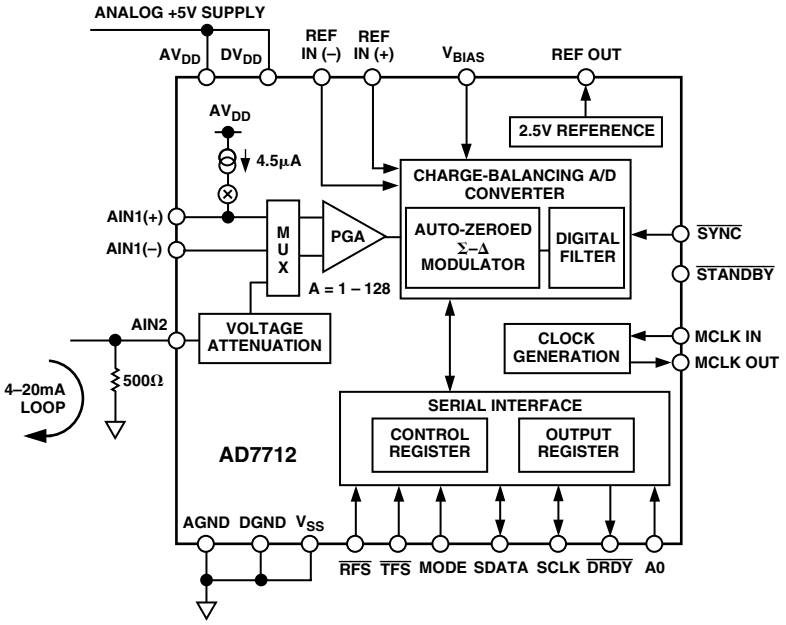

Figure 20. 4–20 mA Loop Measurement Using the AD7712

OUTLINE DIMENSIONS

24-Lead Standard Small Outline Package [SOIC]
Wide Body
(RW-24)

Dimensions shown in millimeters and (inches)

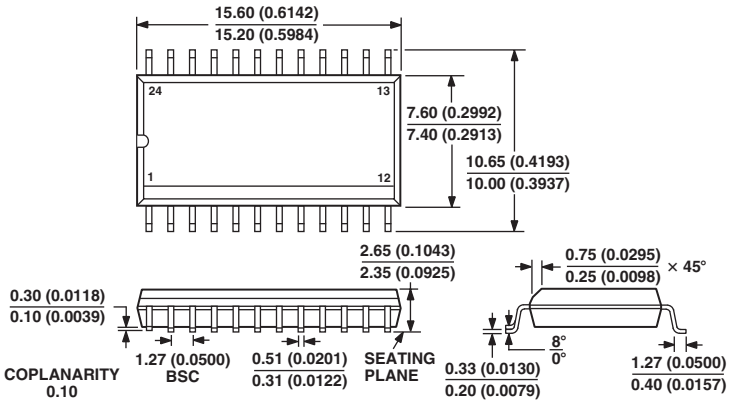

COMPLIANT TO JEDEC STANDARDS MS-013AD
CONTROLLING DIMENSIONS ARE IN MILLIMETERS; INCH DIMENSIONS (IN PARENTHESES) ARE ROUNDED-OFF MILLIMETER EQUIVALENTS FOR REFERENCE ONLY AND ARE NOT APPROPRIATE FOR USE IN DESIGN

OUTLINE DIMENSIONS

24-Lead Ceramic Dual In-Line Package [CERDIP]
(Q-24)

Dimensions shown in inches and (millimeters)

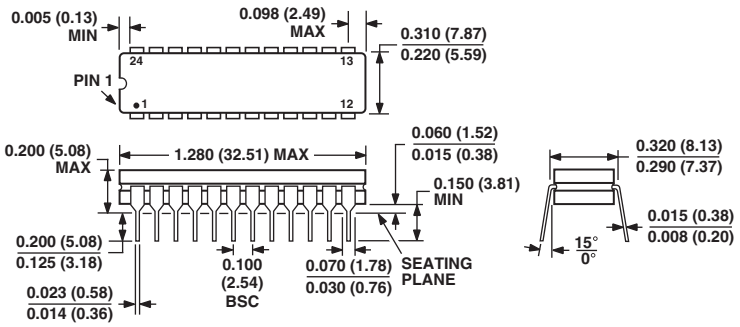

CONTROLLING DIMENSIONS ARE IN INCHES; MILLIMETER DIMENSIONS (IN PARENTHESES) ARE ROUNDED-OFF INCH EQUIVALENTS FOR REFERENCE ONLY AND ARE NOT APPROPRIATE FOR USE IN DESIGN

24-Lead Plastic Dual In-Line Package [PDIP]
(N-24)

Dimensions shown in inches and (millimeters)

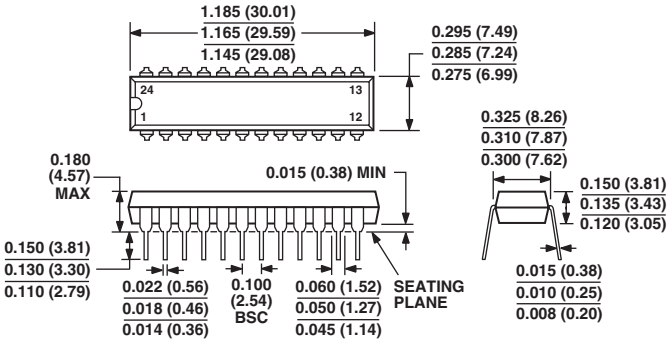

COMPLIANT TO JEDEC STANDARDS MO-095AG

CONTROLLING DIMENSIONS ARE IN INCHES; MILLIMETER DIMENSIONS (IN PARENTHESES) ARE ROUNDED-OFF INCH EQUIVALENTS FOR REFERENCE ONLY AND ARE NOT APPROPRIATE FOR USE IN DESIGN

C01177–0–3/04(F)

Revision History

Location	Page
3/04—Data Sheet changed from REV. E to REV. F.	
Changes to SPECIFICATIONS	2
Updated ORDERING GUIDE	4
Deleted AD7712 to ADSP-2105 Interface section	26
Changes to AD7712 to 68HC11 Interface section	26
Updated OUTLINE DIMENSIONS	27

ООО «ЛайфЭлектроникс» “LifeElectronics” LLC

ИНН 7805602321 КПП 780501001 Р/С 40702810122510004610 ФАКБ "АБСОЛЮТ БАНК" (ЗАО) в г.Санкт-Петербурге К/С 30101810900000000703 БИК 044030703

Компания «Life Electronics» занимается поставками электронных компонентов импортного и отечественного производства от производителей и со складов крупных дистрибьюторов Европы, Америки и Азии.

С конца 2013 года компания активно расширяет линейку поставок компонентов по направлению коаксиальный кабель, кварцевые генераторы и конденсаторы (керамические, пленочные, электролитические), за счёт заключения дистрибьюторских договоров

Мы предлагаем:

- *Конкурентоспособные цены и скидки постоянным клиентам.*
- *Специальные условия для постоянных клиентов.*
- *Подбор аналогов.*
- *Поставку компонентов в любых объемах, удовлетворяющих вашим потребностям.*

- *Приемлемые сроки поставки, возможна ускоренная поставка.*
- *Доставку товара в любую точку России и стран СНГ.*
- *Комплексную поставку.*
- *Работу по проектам и поставку образцов.*
- *Формирование склада под заказчика.*

- *Сертификаты соответствия на поставляемую продукцию (по желанию клиента).*
- *Тестирование поставляемой продукции.*
- *Поставку компонентов, требующих военную и космическую приемку.*
- *Входной контроль качества.*
- *Наличие сертификата ISO.*

В составе нашей компании организован Конструкторский отдел, призванный помогать разработчикам, и инженерам.

Конструкторский отдел помогает осуществить:

- *Регистрацию проекта у производителя компонентов.*
- *Техническую поддержку проекта.*
- *Защиту от снятия компонента с производства.*
- *Оценку стоимости проекта по компонентам.*
- *Изготовление тестовой платы монтаж и пусконаладочные работы.*

Тел: +7 (812) 336 43 04 (многоканальный)
Email: org@lifeelectronics.ru

www.lifeelectronics.ru