FAIRCHILD SEMICONDUCTOR®

2N3819

N-Channel RF Amplifier

- This device is designed for RF amplifier and mixer applications operating up to 450MHz, and for analog switching requiring low capacitance.
- Sourced from process 50.

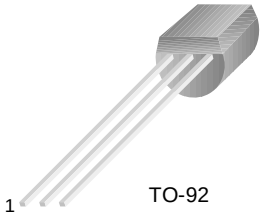

1. Drain 2. Gate 3. Source

Epitaxial Silicon Transistor

Absolute Maximum Ratings* T_C=25°C unless otherwise noted

Symbol	Parameter	Ratings	Units
V_{DG}	Drain-Gate Voltage	25	V
V_{GS}	Gate-Source Voltage	-25	V
I_D	Drain Current	50	mA
I_{GF}	Forward Gate Current	10	mA
T_{STG}	Storage Temperature Range	-55 ~ 150	°C

* This ratings are limiting values above which the serviceability of any semiconductor device may be impaired.

NOTES:
1) These rating are based on a maximum junction temperature of 150 degrees C.
2) These are steady limits. The factory should be consulted on applications involving pulsed or low duty cycle operations.

Electrical Characteristics T_C=25°C unless otherwise noted

Symbol	Parameter	Test Condition	Min.	Typ.	Max.	Units
Off Characteristics						
$V_{(BR)GSS}$	Gate-Source Breakdwon Voltage	I_G = 1.0µA, V_{DS} = 0	25			V
I_{GSS}	Gate Reverse Current	V_{GS} = -15V, V_{DS} = 0			2.0	nA
V_{GS}(off)	Gate-Source Cutoff Voltage	V_{DS} = 15V, I_D = 2.0nA			8.0	V
V_{GS}	Gate-Source Voltage	V_{DS} = 15V, I_D = 200µA	-0.5		-7.5	V
On Characteristics						
I_{DSS}	Zero-Gate Voltage Drain Current	V_{DS} = 15V, V_{GS} = 0	2.0		20	mA
Small Signal Characteristics						
gfs	Forward Transfer Conductance	V_{DS} = 15V, V_{GS} = 0, f = 1.0KHz	2000		6500	µmhos
goss	Output Conductance	V_{DS}= 15V, V_{GS} = 0, f = 1.0KHz			50	µmhos
y_{fs}	Forward Transfer Admittance	V_{DS}= 15V, V_{GS} = 0, f = 1.0KHz	1600			µmhos
C_{iss}	Input Capacitance	V_{DS} = 15V, V_{GS} = 0, f = 1.0KHz			8.0	pF
C_{rss}	Reverse Transfer Capacitance	V_{DS} = 15V, V_{GS} = 0, f = 1.0KHz			4.0	pF

Thermal Characteristics T_A=25°C unless otherwise noted

Symbol	Parameter	Max.	Units
P_D	Total Device Dissipation Derate above 25°C	350 2.8	mW mW/°C
$R_{\theta JC}$	Thermal Resistance, Junction to Case	125	°C/W
$R_{\theta JA}$	Thermal Resistance, Junction to Ambient	357	°C/W

* Device mounted on FR-4 PCB 1.5" × 1.6" × 0.06"

©2002 Fairchild Semiconductor Corporation

Package Dimensions

TO-92

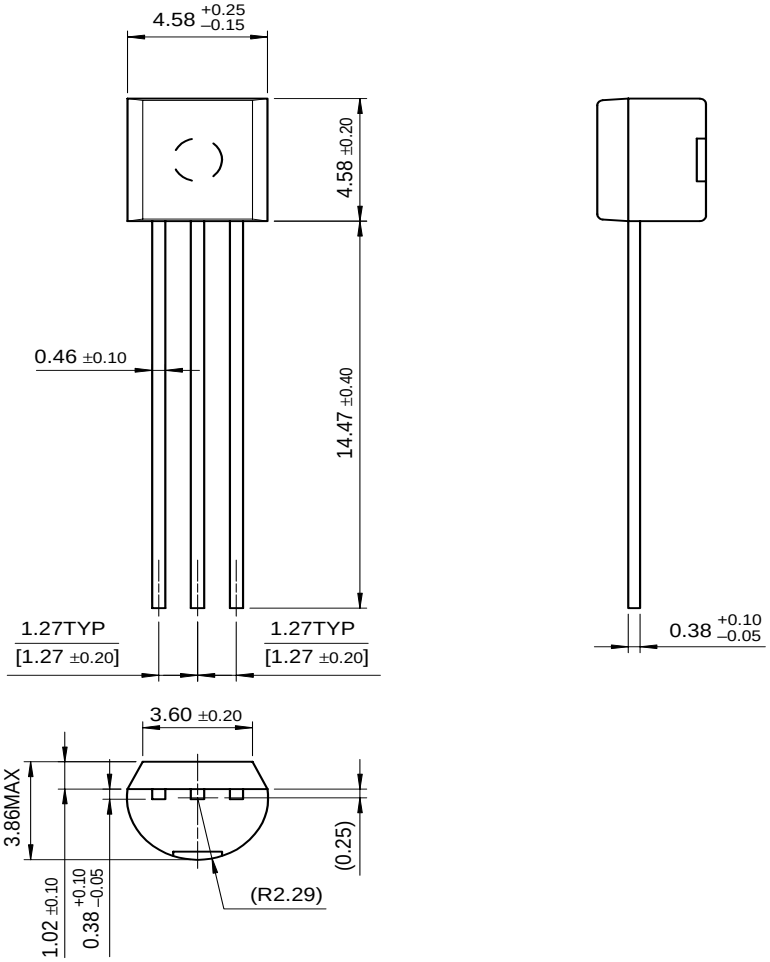

Dimensions in Millimeters

©2002 Fairchild Semiconductor Corporation

TRADEMARKS

The following are registered and unregistered trademarks Fairchild Semiconductor owns or is authorized to use and is not intended to be an exhaustive list of all such trademarks.

ACEx™	FACT™	ImpliedDisconnect™	PACMAN™	SPM™
ActiveArray™	FACT Quiet series™	ISOPLANAR™	POP™	Stealth™
Bottomless™	FAST®	LittleFET™	Power247™	SuperSOT™-3
CoolFET™	FASTr™	MicroFET™	PowerTrench®	SuperSOT™-6
CROSSVOLT™	FRFET™	MicroPak™	QFET™	SuperSOT™-8
DOME™	GlobalOptoisolator™	MICROWIRE™	QS™	SyncFET™
EcoSPARK™	GTO™	MSX™	QT Optoelectronics™	TinyLogic™
E^2CMOS™	HiSeC™	MSXPro™	Quiet Series™	TruTranslation™
EnSigna™	I^2C™	OCX™	RapidConfigure™	UHC™
Across the board. Around the world.™		OCXPro™	RapidConnect™	UltraFET®
The Power Franchise™		OPTOLOGIC®	SILENT SWITCHER®	VCX™
Programmable Active Droop™		OPTOPLANAR™	SMART START™	

DISCLAIMER

FAIRCHILD SEMICONDUCTOR RESERVES THE RIGHT TO MAKE CHANGES WITHOUT FURTHER NOTICE TO ANY PRODUCTS HEREIN TO IMPROVE RELIABILITY, FUNCTION OR DESIGN. FAIRCHILD DOES NOT ASSUME ANY LIABILITY ARISING OUT OF THE APPLICATION OR USE OF ANY PRODUCT OR CIRCUIT DESCRIBED HEREIN; NEITHER DOES IT CONVEY ANY LICENSE UNDER ITS PATENT RIGHTS, NOR THE RIGHTS OF OTHERS.

LIFE SUPPORT POLICY

FAIRCHILD'S PRODUCTS ARE NOT AUTHORIZED FOR USE AS CRITICAL COMPONENTS IN LIFE SUPPORT DEVICES OR SYSTEMS WITHOUT THE EXPRESS WRITTEN APPROVAL OF FAIRCHILD SEMICONDUCTOR CORPORATION.

As used herein:

1. Life support devices or systems are devices or systems which, (a) are intended for surgical implant into the body, or (b) support or sustain life, or (c) whose failure to perform when properly used in accordance with instructions for use provided in the labeling, can be reasonably expected to result in significant injury to the user.

2. A critical component is any component of a life support device or system whose failure to perform can be reasonably expected to cause the failure of the life support device or system, or to affect its safety or effectiveness.

PRODUCT STATUS DEFINITIONS

Definition of Terms

Datasheet Identification	Product Status	Definition
Advance Information	Formative or In Design	This datasheet contains the design specifications for product development. Specifications may change in any manner without notice.
Preliminary	First Production	This datasheet contains preliminary data, and supplementary data will be published at a later date. Fairchild Semiconductor reserves the right to make changes at any time without notice in order to improve design.
No Identification Needed	Full Production	This datasheet contains final specifications. Fairchild Semiconductor reserves the right to make changes at any time without notice in order to improve design.
Obsolete	Not In Production	This datasheet contains specifications on a product that has been discontinued by Fairchild semiconductor. The datasheet is printed for reference information only.

©2002 Fairchild Semiconductor Corporation

ООО «ЛайфЭлектроникс» “LifeElectronics” LLC

ИНН 7805602321 КПП 780501001 Р/С 40702810122510004610 ФАКБ "АБСОЛЮТ БАНК" (ЗАО) в г.Санкт-Петербурге К/С 30101810900000000703 БИК 044030703

Компания «Life Electronics» занимается поставками электронных компонентов импортного и отечественного производства от производителей и со складов крупных дистрибьюторов Европы, Америки и Азии.

С конца 2013 года компания активно расширяет линейку поставок компонентов по направлению коаксиальный кабель, кварцевые генераторы и конденсаторы (керамические, пленочные, электролитические), за счёт заключения дистрибьюторских договоров

Мы предлагаем:

- *Конкурентоспособные цены и скидки постоянным клиентам.*
- *Специальные условия для постоянных клиентов.*
- *Подбор аналогов.*
- *Поставку компонентов в любых объемах, удовлетворяющих вашим потребностям.*

- *Приемлемые сроки поставки, возможна ускоренная поставка.*
- *Доставку товара в любую точку России и стран СНГ.*
- *Комплексную поставку.*
- *Работу по проектам и поставку образцов.*
- *Формирование склада под заказчика.*

- *Сертификаты соответствия на поставляемую продукцию (по желанию клиента).*
- *Тестирование поставляемой продукции.*
- *Поставку компонентов, требующих военную и космическую приемку.*
- *Входной контроль качества.*
- *Наличие сертификата ISO.*

В составе нашей компании организован Конструкторский отдел, призванный помогать разработчикам, и инженерам.

Конструкторский отдел помогает осуществить:

- *Регистрацию проекта у производителя компонентов.*
- *Техническую поддержку проекта.*
- *Защиту от снятия компонента с производства.*
- *Оценку стоимости проекта по компонентам.*
- *Изготовление тестовой платы монтаж и пусконаладочные работы.*

Тел: +7 (812) 336 43 04 (многоканальный)
Email: org@lifeelectronics.ru

www.lifeelectronics.ru