TOSHIBA Intelligent Power Device Silicon Monolithic Power MOS Integrated Circuit

TPD1033F

High-side Power Switch for Motors, Solenoids, and Lamp Drivers

The TPD1033F is a monolithic power IC for high-side switches.
The IC has a vertical MOS FET output that can be directly driven from a CMOS or TTL logic circuit (e.g., an MPU).
The device is equipped with intelligent self-protection and diagnostic functions.

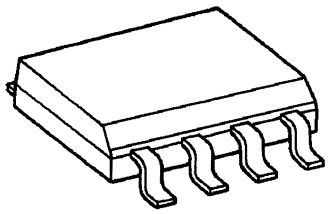

SOP8-P-1.27A

Weight: 0.08 g (typ.)

Features

- A monolithic power IC with a new structure combining a control block (Bi-CMOS) and a vertical power MOS FET (π-MOS) on a single chip
- One side of load can be grounded to a high-side switch
- Can directly drive a power load from a microprocessor.
- Built-in protection against thermal shutdown and load short-circuiting.
- Incorporates a diagnosis function that allows diagnosis output to be read externally in the event of load short-circuiting, opening, or overheating.
- Up to -10 V of counterelectromotive force from an L load can be applied.
- Low on-resistance : R_{ON} = 220 mΩ (max)
- Low operating current : I_{DD} = 1 mA (typ.), (@V_{DD} = 12 V, V_{IN} = 0 V)
- 8-pin SOP package for surface mounting can be packed in tape.

Pin Assignment

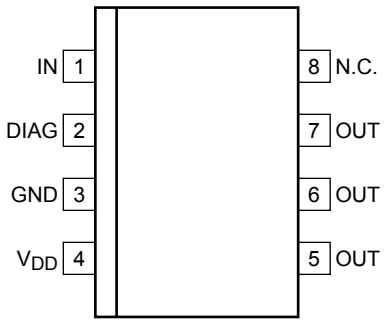

(top view)

Marking

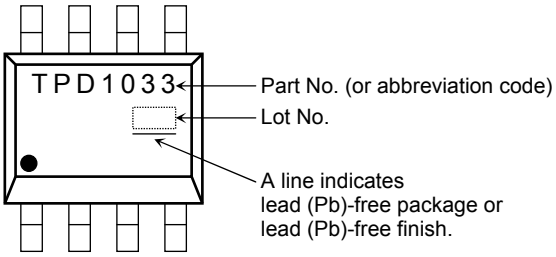

(●) on lower left of the marking indicates Pin 1.

Note: Due to its MOS structure, this product is sensitive to static electricity.

Block Diagram

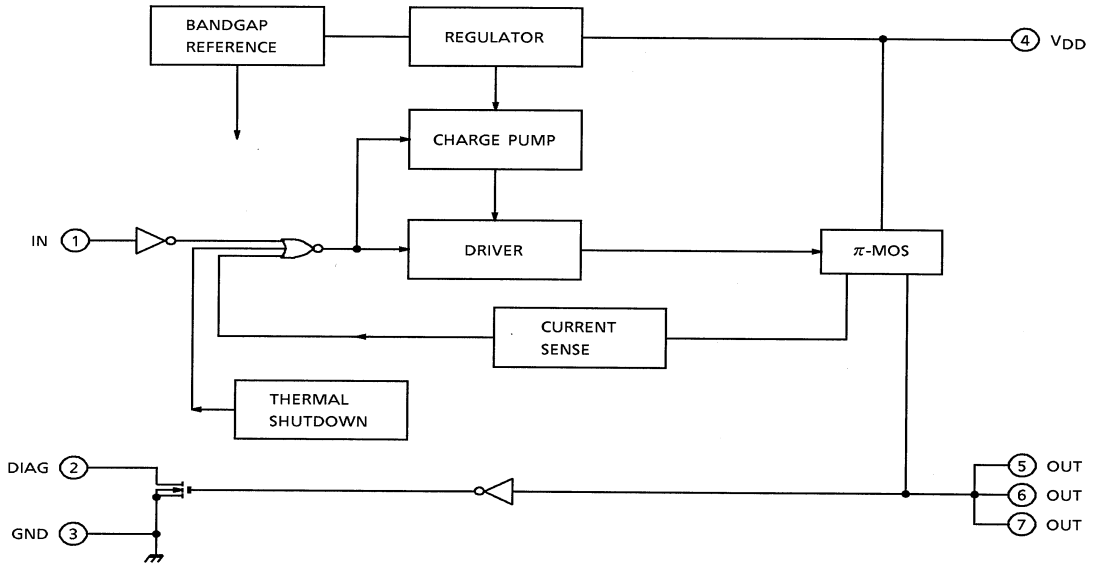

Pin Description

Pin No.	Symbol	Function
1	IN	Input pin. Input is CMOS-compatible, with pull-down resistor connected. Even if the input is open, output will not accidentally turn on.
2	DIAG	Self-diagnosis detection pin. Goes low when overheating is detected or when output is short-circuited with input on (high). n-channel open drain.
3	GND	Ground pin.
4	V_{DD}	Power pin.
5, 6, 7	OUT	Output pin. When the load is short-circuited and current in excess of the detection current (8 A typ.) flows to the output pin, the output automatically turns on or off.

Timing Chart

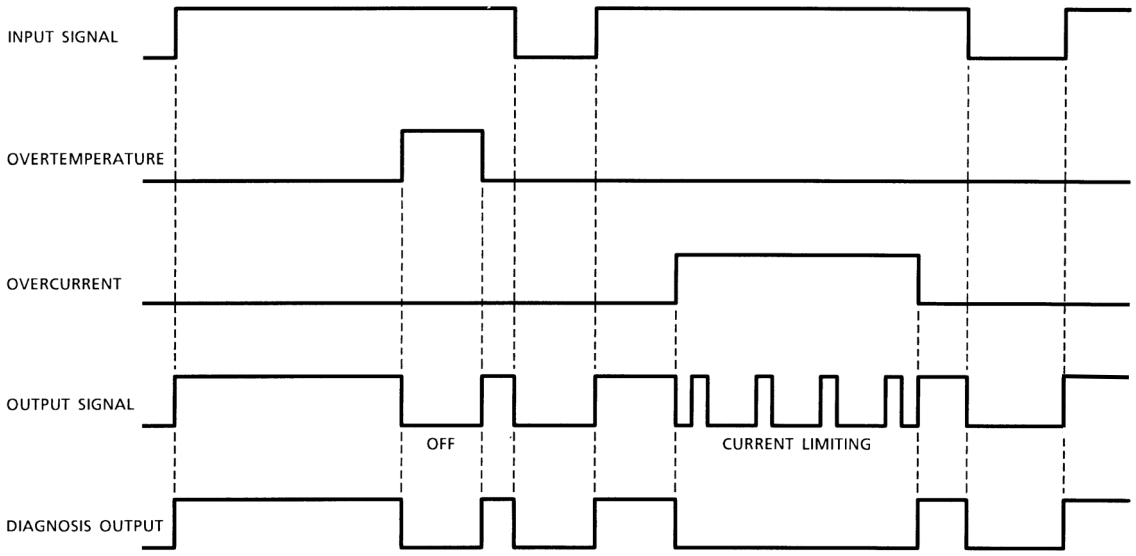

Truth Table

Input Signal	Output Signal	Diagnosis Output	State
H	H	H	Normal
L	L	L	
H	L	L	Load short-circuited
L	L	L	
H	H	H	Load open
L	H	H	
H	L	L	Overtemperature
L	L	L	

Absolute Maximum Ratings (Ta = 25°C)

Characteristic		Symbol	Rating	Unite
Drain-source voltage		V_{DS}	60	V
Supply voltage	DC	$V_{DD\ (1)}$	25	V
	Pulse	$V_{DD\ (2)}$	60 (Rs = 1Ω,τ= 250 ms)	V
Input voltage	DC	$V_{IN\ (1)}$	-0.5 ~ 12	V
	Pulse	$V_{IN\ (2)}$	$V_{DD\ (1)}$ + 1.5 (t = 100 ms)	V
Diagnosis output voltage		V_{DIAG}	-0.5 ~ 25	V
Output current		I_O	Internally limited	A
Input current		I_{IN}	± 10	mA
Diagnosis output current		I_{DIAG}	5	mA
Power dissipation (Ta = 25°C)		P_D	1.4 Note 1	W
			2.4 Note 2	
Operating temperature		T_{opr}	- 40 ~ 110	°C
Channel temperature		T_{ch}	150	°C
Storage temperature		T_{stg}	- 55 ~ 150	°C

Note: Using continuously under heavy loads (e.g. the application of high temperature/current/voltage and the significant change in temperature, etc.) may cause this product to decrease in the reliability significantly even if the operating conditions (i.e. operating temperature/current/voltage, etc.) are within the absolute maximum ratings and the operating ranges.
Please design the appropriate reliability upon reviewing the Toshiba Semiconductor Reliability Handbook ("Handling Precautions"/Derating Concept and Methods) and individual reliability data (i.e. reliability test report and estimated failure rate, etc).

Thermal Resistance

Characteristic	Symbol	Test Condition	Unit
Thermal resistance	$R_{th\ (ch-a)}$	89.3 (Note 1)	°C/ W
		52.1 (Note 2)	

Note 1: Mounted on glass epoxy board (25.4 mm × 25.4 mm × 0.8 mm) (DC)
Note 2: Mounted on glass epoxy board (25.4 mm × 25.4 mm × 0.8 mm) (t_W ≤ 10 s)

Electrical Characteristics
(Unless otherwise specified, T_{ch} = - 40 to 110°C, V_{DD} = 8~18 V)

Characteristic		Symbol	Test Cir-cuit	Test Condition	Min	Typ.	Max	Unit
Operating supply voltage		$V_{DD\ (opr)}$	—	—	5	12	18	V
Supply current		I_{DD}	—	V_{DD} = 12 V, V_{IN} = 0 V	—	1	5	mA
Input voltage		V_{IH}	—	V_{DD} = 12 V, I_O = 2 A	3.5	—	—	V
		V_{IL}	—	V_{DD} = 12 V, I_O = 1.2 mA	—	—	1.5	V
Input current		$I_{IN\ (1)}$	—	V_{DD} = 12 V, V_{IN} = 5 V	—	50	200	μA
		$I_{IN\ (2)}$	—	V_{DD} = 12 V, V_{IN} = 0 V	-0.2	—	0.2	μA
On-voltage		$V_{DS\ (ON)}$	—	V_{DD} = 12 V, I_O = 2 A, T_{ch} = 25°C	—	—	0.44	V
On-resistance		$R_{DS\ (ON)}$	—	V_{DD} = 12 V, I_O = 2 A, T_{ch} = 25°C	—	—	0.22	Ω
Output leakage current		I_{OL}	—	V_{DD} = 18 V, V_{IN} = 0 V	—	—	1.2	mA
Diagnosis output voltage	"L" Level	V_{DL}	—	V_{DD} = 12 V, I_{DL} = 2 mA	—	—	0.4	V
Diagnosis output current	"H" Level	I_{DH}	—	V_{DD} = 18 V, V_{DH} = 18 V	—	—	10	μA
Overcurrent protection		$I_{S\ (1)}$ Note 3	1	V_{DD} = 12 V, T_{ch} = 25°C	4	6	8	A
		$I_{S\ (2)}$ Note 4	2		4	8	12	A
Thermal shutdown	Temperature	Ts	—	—	150	160	200	°C
	Hysteresis	ΔTs	—		—	10	—	°C
Open detection resistance		R_{ops}	—	V_{DD} = 8 V	1	20	100	kΩ
Switching time		t_{ON}	3	V_{DD} = 12 V, R_L = 5Ω, T_{ch} = 25°C	10	100	—	μs
		t_{OFF}	3		10	30	—	μs

Note 3: Overcurrent detection value when load is short circuited and V_{IN} = "L" → "H"
Note 4: Overcurrent detection value when load current is increased while V_{IN} = "H"

Test Circuit 1

Over-current detection

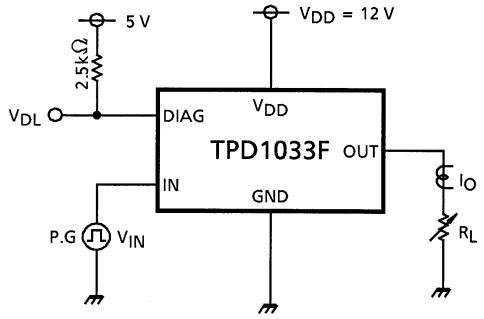

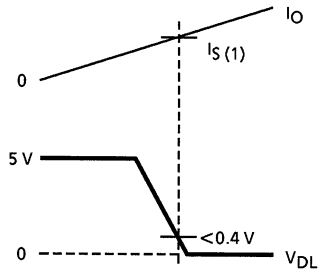

Test Circuit 2

Over-current detection

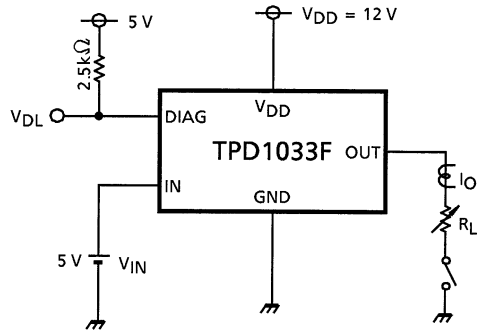

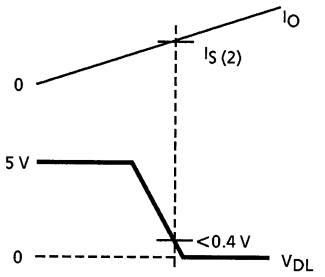

Test Circuit 3

Switching time

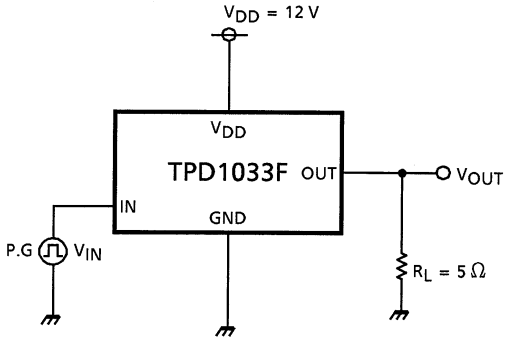

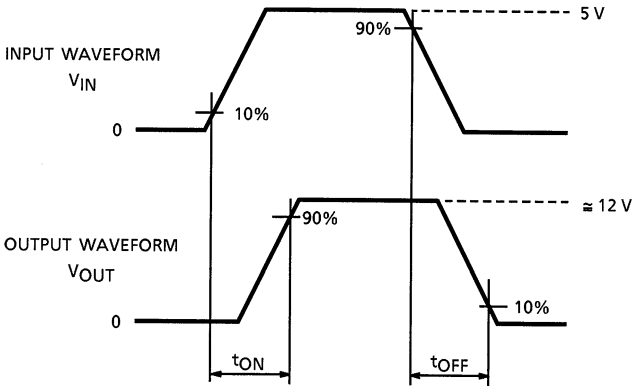

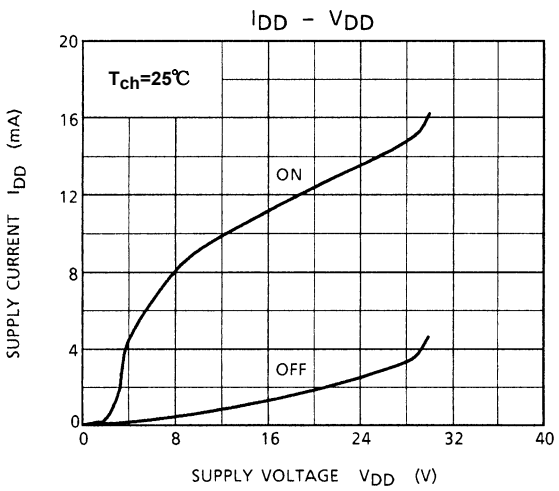
IDD – VDD
Tch=25℃
ON
OFF
SUPPLY CURRENT IDD (mA)
SUPPLY VOLTAGE VDD (V)
0
4
8
12
16
20
0
8
16
24
32
40

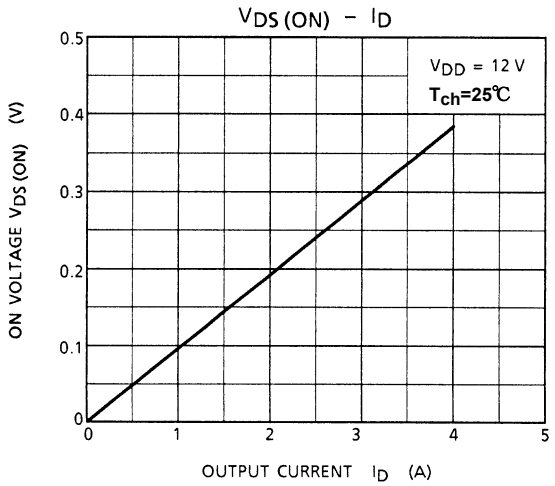
VDS (ON) – ID
VDD = 12 V
Tch=25℃
ON VOLTAGE VDS (ON) (V)
OUTPUT CURRENT ID (A)
0
0.1
0.2
0.3
0.4
0.5
0
1
2
3
4
5

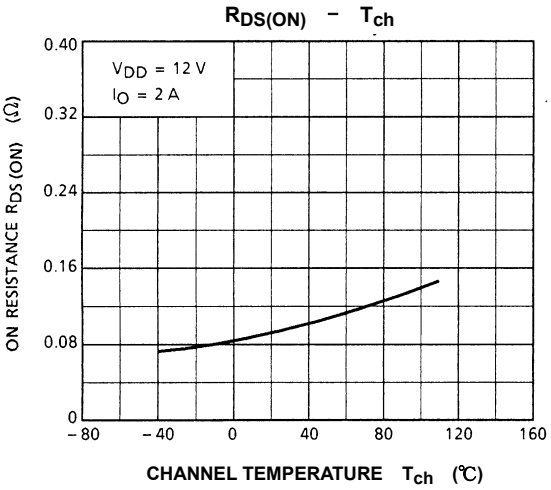
RDS(ON) – Tch
VDD = 12 V
IO = 2 A
ON RESISTANCE RDS (ON) (Ω)
CHANNEL TEMPERATURE Tch (℃)
0
0.08
0.16
0.24
0.32
0.40
– 80
– 40
0
40
80
120
160

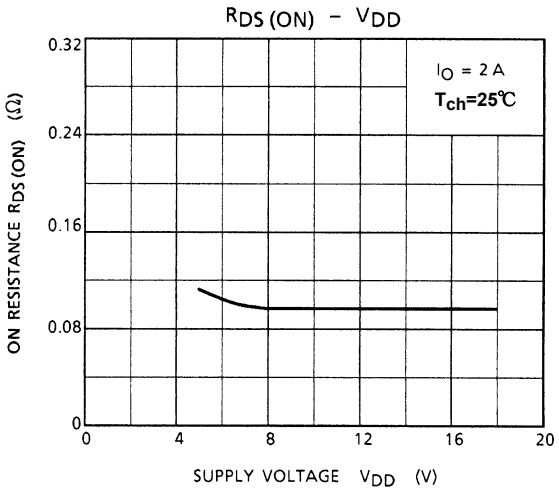
RDS (ON) – VDD
IO = 2 A
Tch=25℃
ON RESISTANCE RDS (ON) (Ω)
SUPPLY VOLTAGE VDD (V)
0
0.08
0.16
0.24
0.32
0
4
8
12
16
20

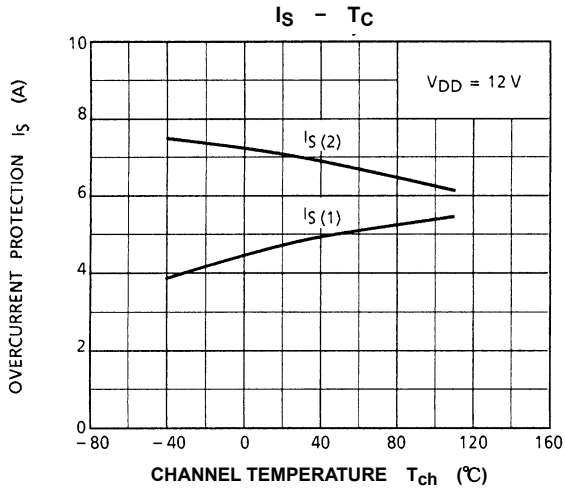
IS – TC
VDD = 12 V
IS (2)
IS (1)
OVERCURRENT PROTECTION IS (A)
CHANNEL TEMPERATURE Tch (℃)
0
2
4
6
8
10
– 80
– 40
0
40
80
120
160

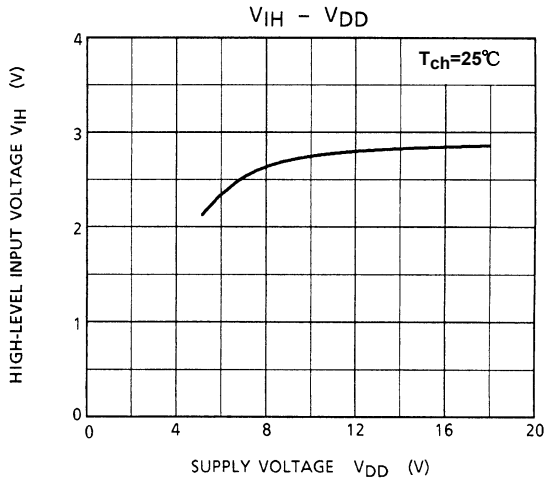
VIH – VDD
Tch=25℃
HIGH-LEVEL INPUT VOLTAGE VIH (V)
SUPPLY VOLTAGE VDD (V)
0
1
2
3
4
0
4
8
12
16
20

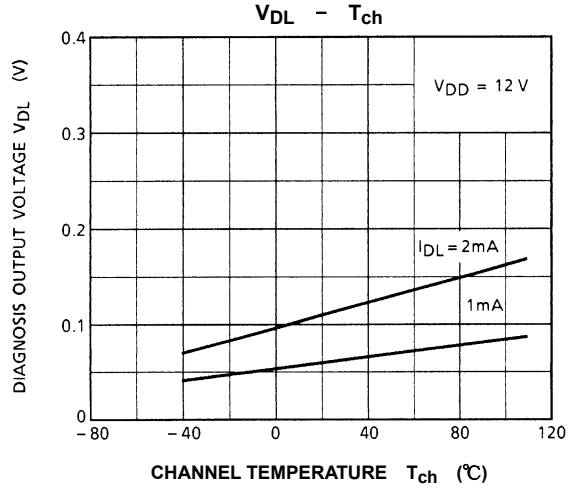

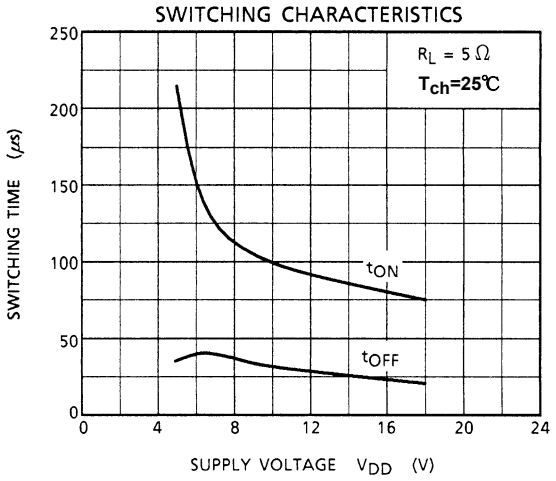

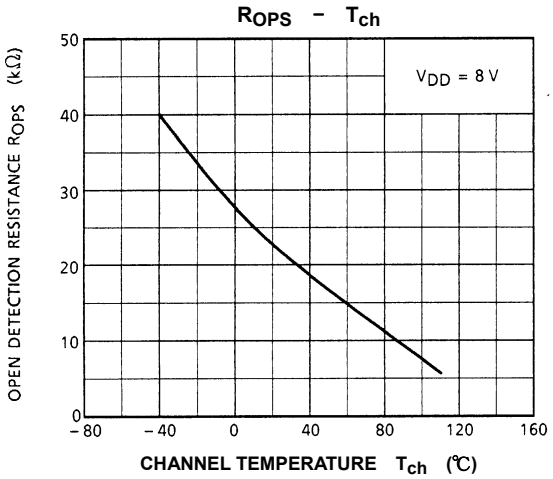

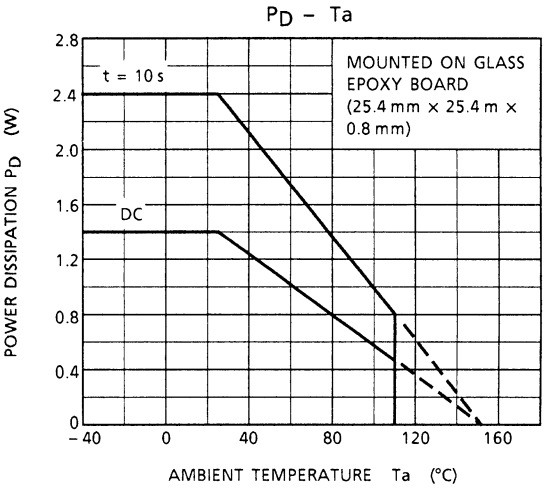

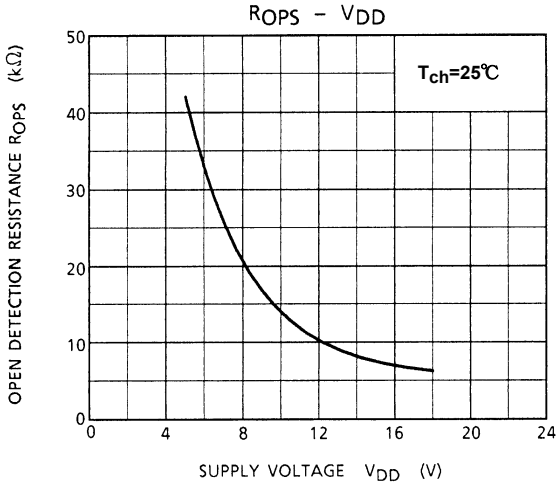

Precaution:

1. Since there is no built-in protection against reverse connection of batteries, etc., provide such protection using external circuits.

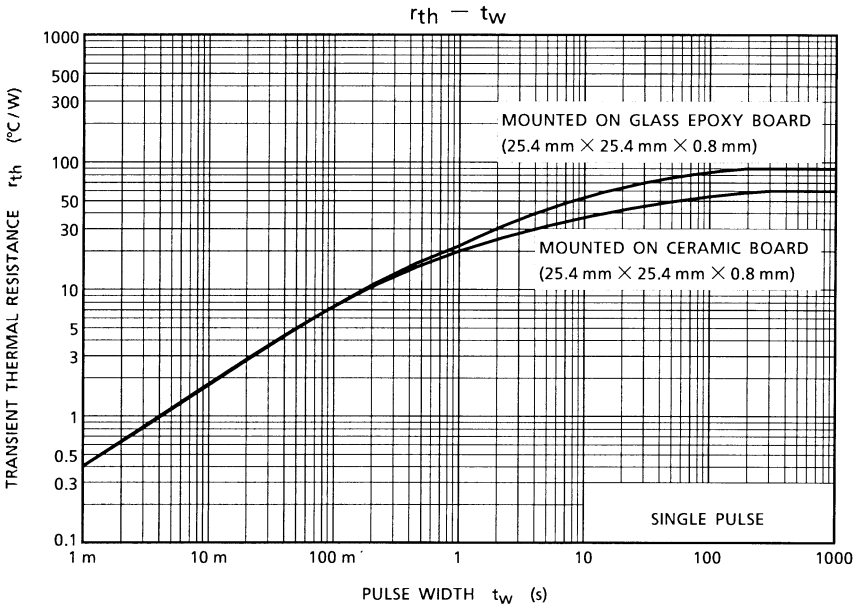
rth — tw
TRANSIENT THERMAL RESISTANCE rth (°C/W)
1000
500
300
100
50
30
10
5
3
1
0.5
0.3
0.1
1 m
10 m
100 m
1
10
100
1000
PULSE WIDTH tw (s)
MOUNTED ON GLASS EPOXY BOARD
(25.4 mm × 25.4 mm × 0.8 mm)
MOUNTED ON CERAMIC BOARD
(25.4 mm × 25.4 mm × 0.8 mm)
SINGLE PULSE

Package Dimensions

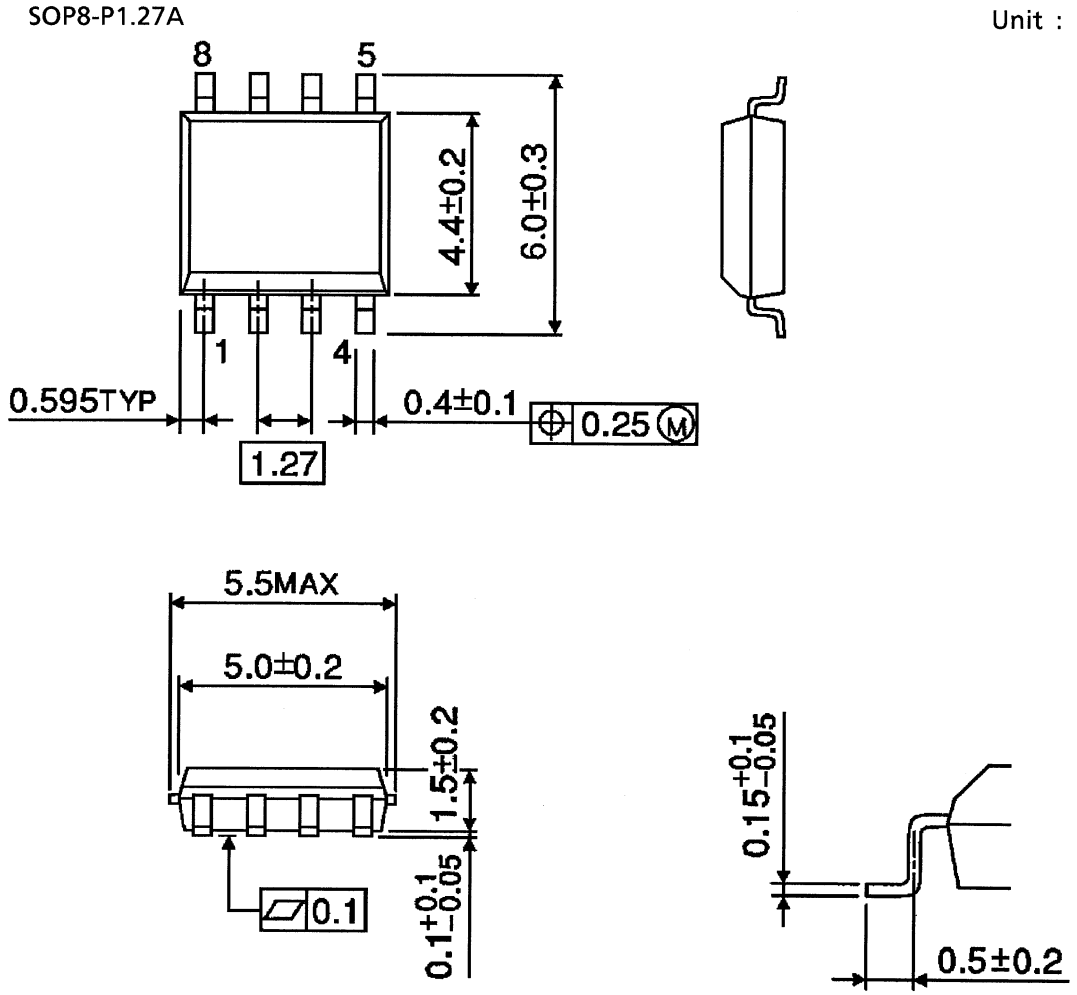

Weight: 0.08 g (typ.)

RESTRICTIONS ON PRODUCT USE

20070701-EN

- The information contained herein is subject to change without notice.
- TOSHIBA is continually working to improve the quality and reliability of its products. Nevertheless, semiconductor devices in general can malfunction or fail due to their inherent electrical sensitivity and vulnerability to physical stress. It is the responsibility of the buyer, when utilizing TOSHIBA products, to comply with the standards of safety in making a safe design for the entire system, and to avoid situations in which a malfunction or failure of such TOSHIBA products could cause loss of human life, bodily injury or damage to property.
  In developing your designs, please ensure that TOSHIBA products are used within specified operating ranges as set forth in the most recent TOSHIBA products specifications. Also, please keep in mind the precautions and conditions set forth in the “Handling Guide for Semiconductor Devices,” or “TOSHIBA Semiconductor Reliability Handbook” etc.
- The TOSHIBA products listed in this document are intended for usage in general electronics applications (computer, personal equipment, office equipment, measuring equipment, industrial robotics, domestic appliances, etc.).These TOSHIBA products are neither intended nor warranted for usage in equipment that requires extraordinarily high quality and/or reliability or a malfunction or failure of which may cause loss of human life or bodily injury (“Unintended Usage”). Unintended Usage include atomic energy control instruments, airplane or spaceship instruments, transportation instruments, traffic signal instruments, combustion control instruments, medical instruments, all types of safety devices, etc.. Unintended Usage of TOSHIBA products listed in his document shall be made at the customer’s own risk.
- The products described in this document shall not be used or embedded to any downstream products of which manufacture, use and/or sale are prohibited under any applicable laws and regulations.
- The information contained herein is presented only as a guide for the applications of our products. No responsibility is assumed by TOSHIBA for any infringements of patents or other rights of the third parties which may result from its use. No license is granted by implication or otherwise under any patents or other rights of TOSHIBA or the third parties.
- Please contact your sales representative for product-by-product details in this document regarding RoHS compatibility. Please use these products in this document in compliance with all applicable laws and regulations that regulate the inclusion or use of controlled substances. Toshiba assumes no liability for damage or losses occurring as a result of noncompliance with applicable laws and regulations.

ООО «ЛайфЭлектроникс» “LifeElectronics” LLC

ИНН 7805602321 КПП 780501001 Р/С 40702810122510004610 ФАКБ "АБСОЛЮТ БАНК" (ЗАО) в г.Санкт-Петербурге К/С 30101810900000000703 БИК 044030703

Компания «Life Electronics» занимается поставками электронных компонентов импортного и отечественного производства от производителей и со складов крупных дистрибьюторов Европы, Америки и Азии.

С конца 2013 года компания активно расширяет линейку поставок компонентов по направлению коаксиальный кабель, кварцевые генераторы и конденсаторы (керамические, пленочные, электролитические), за счёт заключения дистрибьюторских договоров

Мы предлагаем:

- *Конкурентоспособные цены и скидки постоянным клиентам.*
- *Специальные условия для постоянных клиентов.*
- *Подбор аналогов.*
- *Поставку компонентов в любых объемах, удовлетворяющих вашим потребностям.*

- *Приемлемые сроки поставки, возможна ускоренная поставка.*
- *Доставку товара в любую точку России и стран СНГ.*
- *Комплексную поставку.*
- *Работу по проектам и поставку образцов.*
- *Формирование склада под заказчика.*

- *Сертификаты соответствия на поставляемую продукцию (по желанию клиента).*
- *Тестирование поставляемой продукции.*
- *Поставку компонентов, требующих военную и космическую приемку.*
- *Входной контроль качества.*
- *Наличие сертификата ISO.*

В составе нашей компании организован Конструкторский отдел, призванный помогать разработчикам, и инженерам.

Конструкторский отдел помогает осуществить:

- *Регистрацию проекта у производителя компонентов.*
- *Техническую поддержку проекта.*
- *Защиту от снятия компонента с производства.*
- *Оценку стоимости проекта по компонентам.*
- *Изготовление тестовой платы монтаж и пусконаладочные работы.*

Тел: +7 (812) 336 43 04 (многоканальный)
Email: org@lifeelectronics.ru

www.lifeelectronics.ru