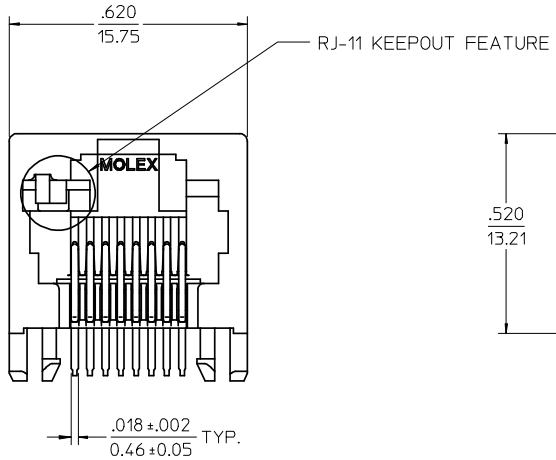

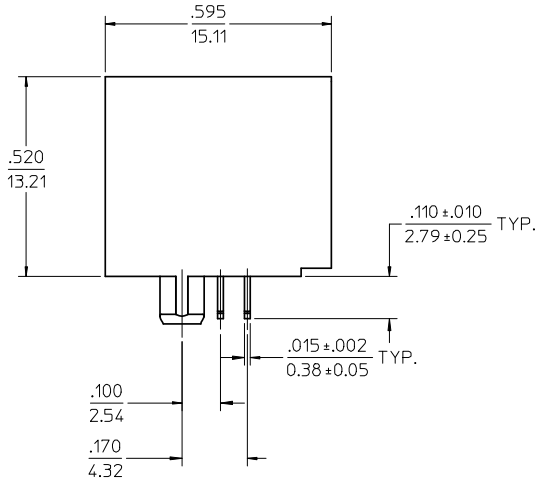

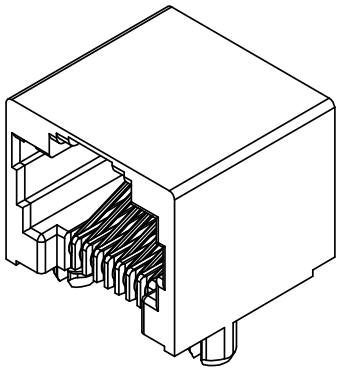

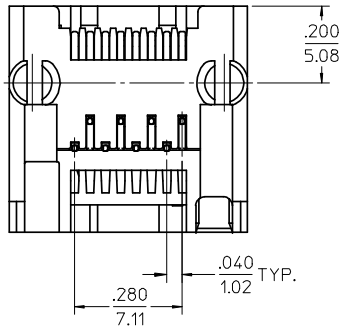

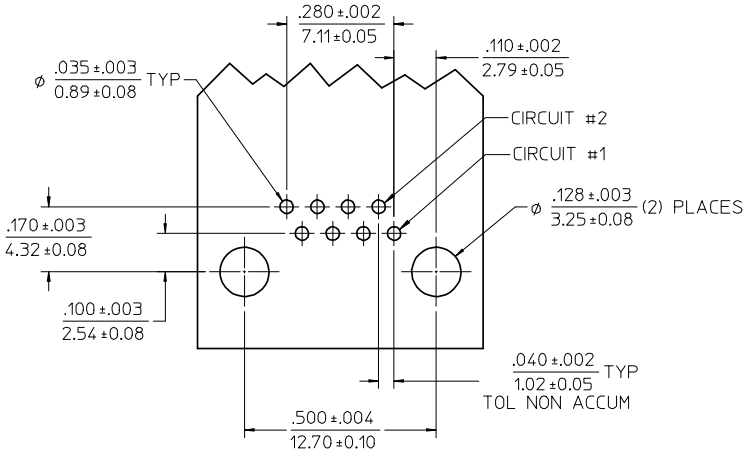

PC BOARD LAYOUT
COMPONENT SIDE OF BOARD
RECOMMENDED PCB THICKNESS: .062/1.57

NOTES:
1) MATERIAL:
   HOUSING: NYLON(PA), GLASS FILLED, UL94V-0, COLOR: BLACK
   TERMINALS: PHOSPHOR BRONZE
2) FINISH:
   TERMINALS:
      SELECT GOLD IN CONTACT AREA: 50 MICROINCHES (1.27 MICROMETERS) MIN.,
      *SELECT TIN IN PC TAIL AREA: 100 MICROINCHES (2.54 MICROMETERS) MIN.,
      WITH OVERALL NICKEL UNDERPLATE: 50 MICROINCHES (1.27 MICROMETERS) MIN.
      *THE PRIMARY SHIPPING CARTON WILL BE LABELED "COMPLIANT TO RoHS DIRECTIVE 2002/95/EC AND ELV ANNEX II OF DIRECTIVE 2000/53/EC". CARTONS WITHOUT THIS LABEL MAY CONTAIN PRODUCT WITH TIN-LEAD IN THE PC TAILS.
3) PRODUCT SPECIFICATION AND PROCESSING PARAMETERS: PS-43860-003.
4) PACKAGING SPECIFICATION:
   CONNECTOR ASSEMBLIES PACKAGED IN EXTRUDED TUBES PER MOLEX PACKAGING SPECIFICATION PK-43860-004.
5) ALL UNTOLERANCED DIMENSIONS ARE SHOWN FOR REFERENCE ONLY.
6) CONFORMS TO FCC REGULATION PART 68.5 FOR MODULAR JACKS.
7) THIS PART CONFORMS TO CLASS B REQUIREMENTS OF COSMETIC SPECIFICATION PS-45499-002.

ADD NOTE 7	2007/11/08	DRWN:JBELL	2007/12/04
EC NO: UCP2008-0965		CH'KD:LSCHMIDT	2007/12/05
APPR:FSMITH			
DESCRIPTION			
D2	REV		

QUALITY SYMBOLS
▼=0
▽=0

GENERAL TOLERANCES (UNLESS SPECIFIED)

	mm	INCH
4 PLACES	± ---	± ---
3 PLACES	± ---	± ---
2 PLACES	± ---	± ---
1 PLACE	± ---	± ---
ANGULAR ±1/2°		

DRAFT WHERE APPLICABLE MUST REMAIN WITHIN DIMENSIONS

DIMENSION STYLE IN/MM	SCALE 4:1	DESIGN UNITS INCH	THIRD ANGLE PROJECTION
DRAWN BY MKAMAR	DATE 00/03/07	TITLE RJ-45 INVERTED MODULAR JACK ASSEMBLY WITH RJ-11 KEEPOUT FEATURE	
CHECKED BY MKAMAR	DATE 00/03/07		
APPROVED BY JROBERTS	DATE 00/03/07	molex MOLEX INCORPORATED	
MATERIAL NO. 446200001		DOCUMENT NO. SD-44620-001	SHEET NO. 1 OF 4
SIZE C	THIS DRAWING CONTAINS INFORMATION THAT IS PROPRIETARY TO MOLEX INCORPORATED AND SHOULD NOT BE USED WITHOUT WRITTEN PERMISSION		

tb_frame_C_P_AM_T
Rev. D 2004/06/28

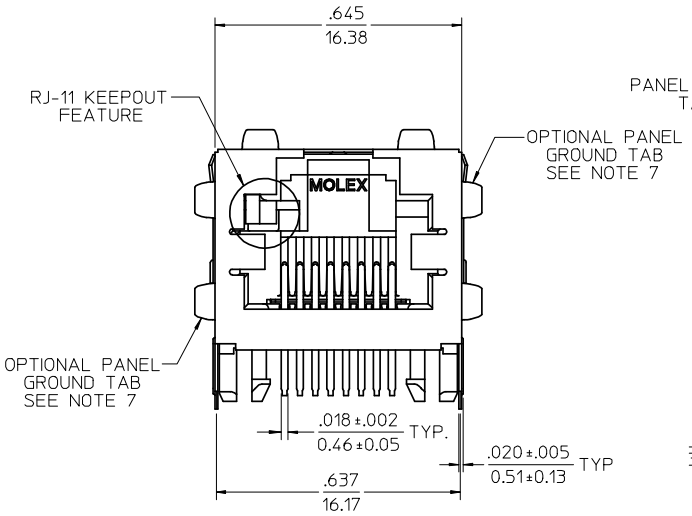

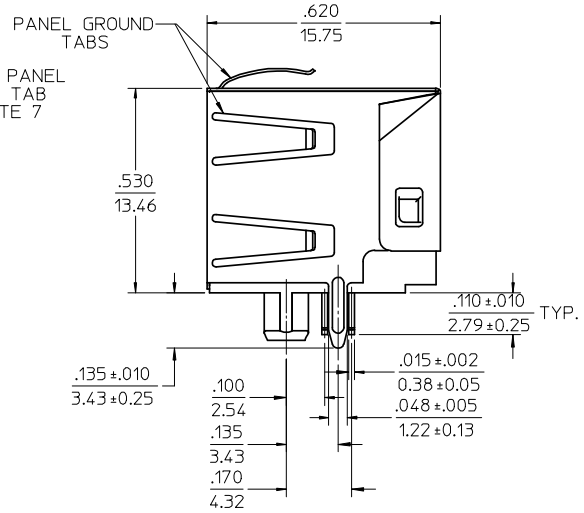

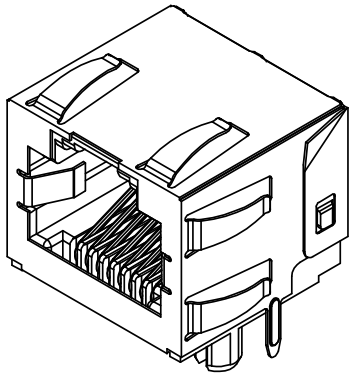

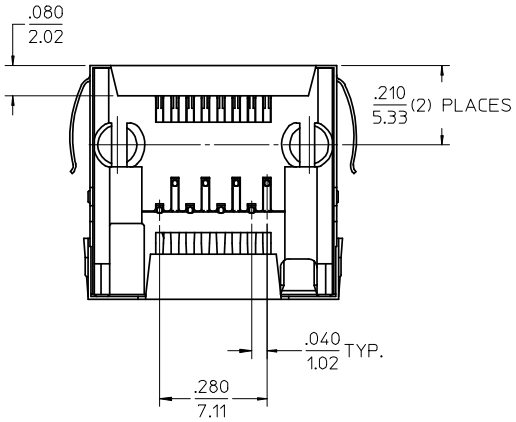

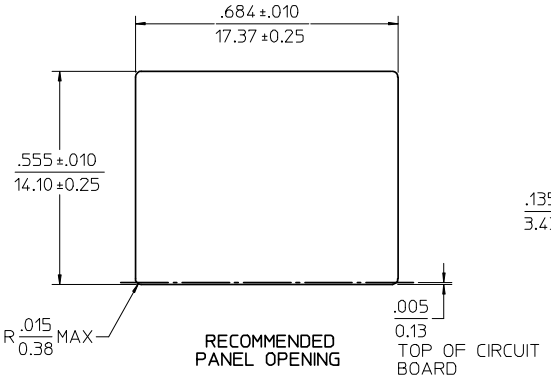

RECOMMENDED PANEL OPENING

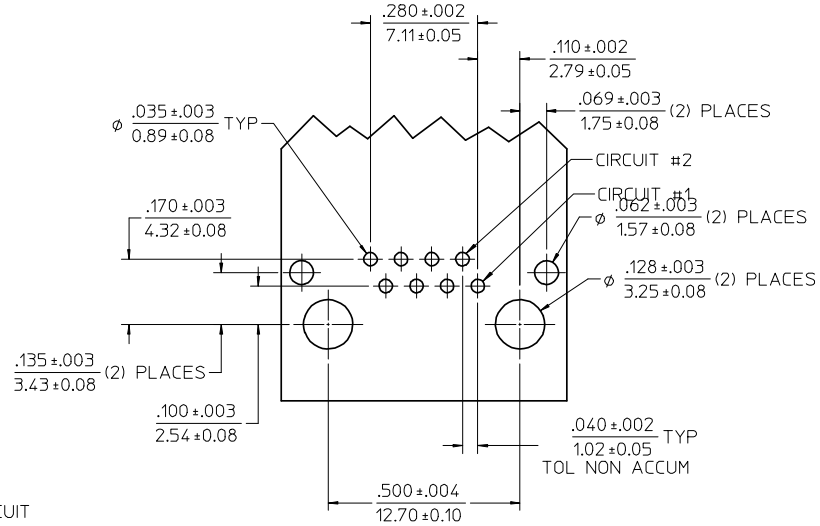

PC BOARD LAYOUT
COMPONENT SIDE OF BOARD
RECOMMENDED PCB THICKNESS: .062/1.57

NOTES:
1) MATERIAL:
HOUSING: NYLON(PA), GLASS FILLED, UL94V-0, COLOR: BLACK
TERMINALS: PHOSPHOR BRONZE
SHIELD: BRASS
2) FINISH:
TERMINALS:
SELECT GOLD IN CONTACT AREA: 50 MICROINCHES (1.27 MICROMETERS) MIN.,
*SELECT TIN IN PC TAIL AREA: 100 MICROINCHES (2.54 MICROMETERS) MIN.,
WITH OVERALL NICKEL UNDERPLATE: 50 MICROINCHES (1.27 MICROMETERS) MIN.
SHIELD:
*100 MICROINCHES (2.54 MICROMETERS) NICKEL OVER 50 MICROINCHES
(1.27 MICROMETERS) COPPER UNDERPLATE, PCB GROUND TABS DIPPED IN TIN
*THE PRIMARY SHIPPING CARTON WILL BE LABELED "COMPLIANT TO RoHS DIRECTIVE 2002/95/EC AND ELV ANNEX II OF DIRECTIVE 2000/53/EC". CARTONS WITHOUT THIS LABEL MAY CONTAIN PRODUCT WITH TIN-LEAD IN THE PC TAILS AND/OR SHIELD.
3) PRODUCT SPECIFICATION AND PROCESSING PARAMETERS: PS-43860-003.
4) PACKAGING SPECIFICATION:
CONNECTOR ASSEMBLIES PACKAGED IN THERMOFORMED TRAYS PER MOLEX PACKAGING SPECIFICATION PK-43860-005.
5) ALL UNTOLERANCED DIMENSIONS ARE SHOWN FOR REFERENCE ONLY.
6) CONFORMS TO FCC REGULATION PART 68.5 FOR MODULAR JACKS.
7) AVAILABLE WITH THE (2) SPECIFIED PANEL GROUND TABS OMITTED FOR SIDE TO SIDE STACKABILITY, PER THE ASSEMBLY MATERIAL NUMBER TABLE.
8) THIS PART CONFORMS TO CLASS B REQUIREMENTS OF COSMETIC SPECIFICATION PS-45499-002.

ASSEMBLY MATERIAL NUMBER	PANEL GROUND TABS
446200002	ALL
446200003	SEE NOTE 7

REV	DESCRIPTION	
D2	ADD NOTE 8	
	EC NO: UCP2008-0965	2007/11/08
	DRWN:JBELL	2007/12/04
	CHKD:LSCHMIDT	2007/12/05
	APPR:FSMITH	

QUALITY SYMBOLS
▼=0
▽=0

GENERAL TOLERANCES (UNLESS SPECIFIED)

	mm	INCH
4 PLACES	± ---	± ---
3 PLACES	± ---	± ---
2 PLACES	± ---	± ---
1 PLACE	± ---	± ---
ANGULAR ±1/2°		

DRAFT WHERE APPLICABLE MUST REMAIN WITHIN DIMENSIONS

DIMENSION STYLE: IN/MM
SCALE: 4:1
DESIGN UNITS: INCH
THIRD ANGLE PROJECTION

DRAWN BY	MKAMAR	DATE 00/03/07
CHECKED BY	MKAMAR	DATE 00/03/07
APPROVED BY	JROBERTS	DATE 00/03/07
MATERIAL NO.	SEE CHART	

TITLE: RJ-45 INVERTED MODULAR JACK ASSEMBLY WITH RJ-11 KEEPOUT FEATURE

molex MOLEX INCORPORATED

DOCUMENT NO. SD-44620-001
SHEET NO. 2 OF 4

SIZE C

THIS DRAWING CONTAINS INFORMATION THAT IS PROPRIETARY TO MOLEX INCORPORATED AND SHOULD NOT BE USED WITHOUT WRITTEN PERMISSION

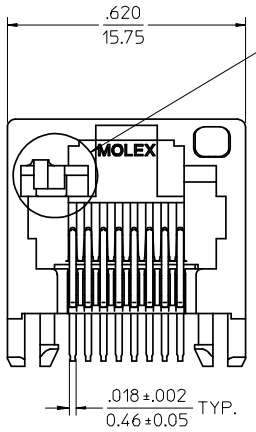

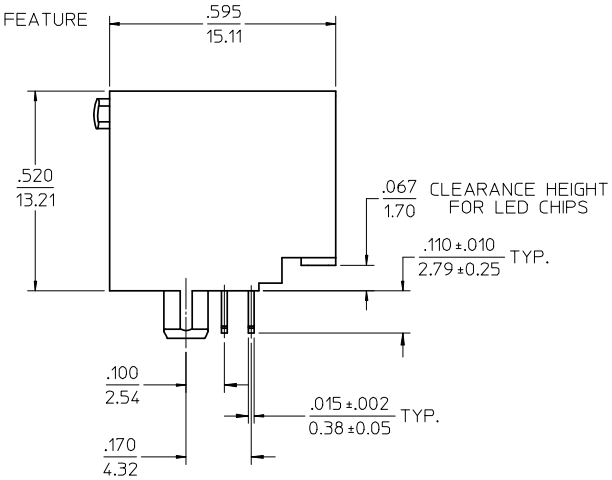

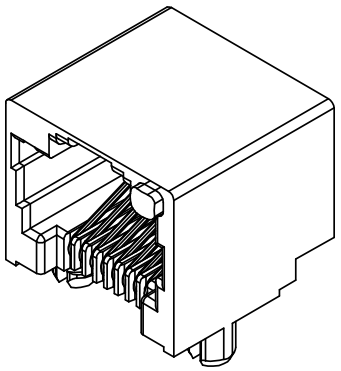

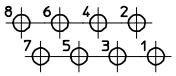

TYPICAL PC TERMINAL HOLE LAYOUT
SCALE 5:1

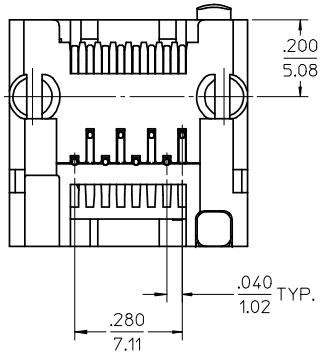

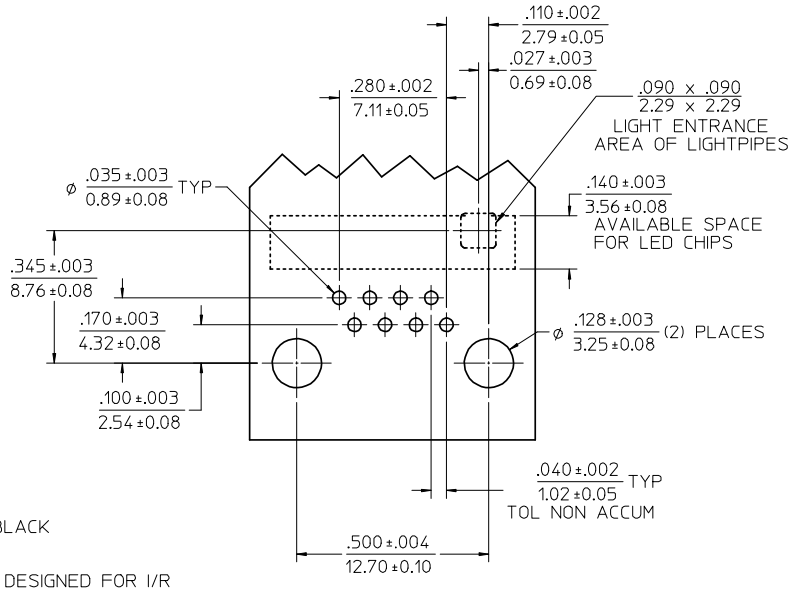

PC BOARD LAYOUT
COMPONENT SIDE OF BOARD
RECOMMENDED PCB THICKNESS: .062/1.57

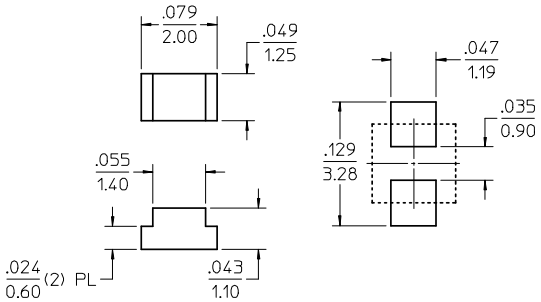

RECOMMENDED SMT
LED SOLDER PATTERN
SCALE 10:1
(SEE NOTE 8)

NOTES:
1) MATERIAL:
HOUSING: NYLON(PA), GLASS FILLED, UL94V-0, COLOR: BLACK
TERMINALS: PHOSPHOR BRONZE
LIGHT PIPES:
POLYCARBONATE-WAVE OR HAND SOLDER ONLY (NOT DESIGNED FOR I/R REFLOW OR CONVECTION REFLOW SOLDER PROCESSES)
POLYSULFONE-MAXIMUM REFLOW TEMPERATURE: 400°F (205°C)
2) FINISH:
TERMINALS:
SELECT GOLD IN CONTACT AREA: 50 MICROINCHES (1.27 MICROMETERS) MIN.,
*SELECT TIN IN PC TAIL AREA: 100 MICROINCHES (2.54 MICROMETERS) MIN.,
WITH OVERALL NICKEL UNDERPLATE: 50 MICROINCHES (1.27 MICROMETERS) MIN.
*THE PRIMARY SHIPPING CARTON WILL BE LABELED "COMPLIANT TO RoHS DIRECTIVE 2002/95/EC AND ELV ANNEX II OF DIRECTIVE 2000/53/EC". CARTONS WITHOUT THIS LABEL MAY CONTAIN PRODUCT WITH TIN-LEAD IN THE PC TAILS.
3) PRODUCT SPECIFICATION AND PROCESSING PARAMETERS: PS-43860-003.
4) PACKAGING SPECIFICATION:
CONNECTOR ASSEMBLIES PACKAGED IN EXTRUDED TUBES PER MOLEX PACKAGING SPECIFICATION PK-43860-004.
5) APPLICATION SPECIFICATION: AS-43860-001
6) ALL UNTOLERANCED DIMENSIONS ARE SHOWN FOR REFERENCE ONLY.
7) CONFORMS TO FCC REGULATION PART 68.5 FOR MODULAR JACKS.
8) FOR CROSS REFERENCE OF RECOMMENDED LED'S, SEE MOLEX WEBSITE.
9) THIS PART CONFORMS TO CLASS B REQUIREMENTS OF COSMETIC SPECIFICATION PS-45499-002.

ASSEMBLY MATERIAL NUMBER	LIGHT PIPE MATERIAL
446201004	POLYCARBONATE
446201005	POLYSULFONE

REV	DESCRIPTION
D2	ADD NOTE 5 & 9 EC NO: UCP2008-0965 DRWN:JBELL 2007/11/08 CH'KD:LSCHMIDT 2007/12/04 APPR:FSMITH 2007/12/05

QUALITY SYMBOLS
▼=0
▽C=0

GENERAL TOLERANCES (UNLESS SPECIFIED)

	mm	INCH
4 PLACES	± ---	± ---
3 PLACES	± ---	± ---
2 PLACES	± ---	± ---
1 PLACE	± ---	± ---
ANGULAR ±1/2°		

DRAFT WHERE APPLICABLE MUST REMAIN WITHIN DIMENSIONS

DIMENSION STYLE: IN/MM
SCALE: 4:1
DESIGN UNITS: INCH
THIRD ANGLE PROJECTION

		DATE
DRAWN BY	MKAMAR	00/03/07
CHECKED BY	MKAMAR	00/03/07
APPROVED BY	JROBERTS	00/03/07

TITLE: RJ-45 INVERTED MODULAR JACK ASSEMBLY WITH RJ-11 KEEPOUT FEATURE

molex MOLEX INCORPORATED

MATERIAL NO.: SEE CHART
DOCUMENT NO.: SD-44620-001
SHEET NO.: 3 OF 4
SIZE: C

THIS DRAWING CONTAINS INFORMATION THAT IS PROPRIETARY TO MOLEX INCORPORATED AND SHOULD NOT BE USED WITHOUT WRITTEN PERMISSION

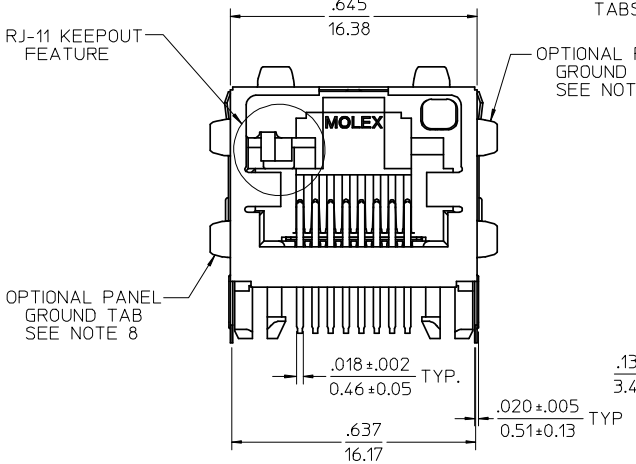

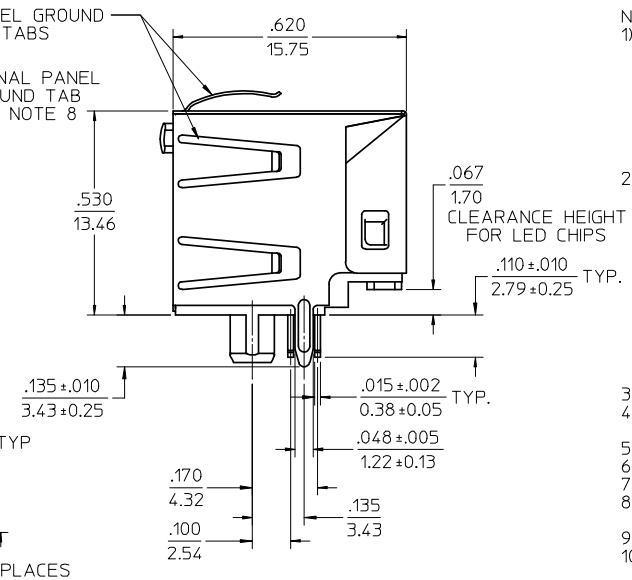

NOTES:
1) MATERIAL:
HOUSING: NYLON(PA), GLASS FILLED, UL94V-0, COLOR: BLACK
TERMINALS: PHOSPHOR BRONZE
SHIELD: BRASS
LIGHT PIPES:
POLYCARBONATE-WAVE OR HAND SOLDER ONLY (NOT DESIGNED FOR I/R REFLOW OR CONVECTION REFLOW SOLDER PROCESSES)
POLYSULFONE-MAXIMUM REFLOW TEMPERATURE: 400°F (205°C)
2) FINISH:
TERMINALS:
SELECT GOLD IN CONTACT AREA: 50 MICROINCHES (1.27 MICROMETERS) MIN.,
*SELECT TIN IN PC TAIL AREA: 100 MICROINCHES (2.54 MICROMETERS) MIN.,
WITH OVERALL NICKEL UNDERPLATE: 50 MICROINCHES (1.27 MICROMETERS) MIN.
SHIELD:
*100 MICROINCHES (2.54 MICROMETERS) NICKEL OVER 50 MICROINCHES (1.27 MICROMETERS) COPPER UNDERPLATE, PCB GROUND TABS DIPPED IN TIN
*THE PRIMARY SHIPPING CARTON WILL BE LABELED "COMPLIANT TO RoHS DIRECTIVE 2002/95/EC AND ELV ANNEX II OF DIRECTIVE 2000/53/EC". CARTONS WITHOUT THIS LABEL MAY CONTAIN PRODUCT WITH TIN-LEAD IN THE PC TAILS AND/OR SHIELD.
3) PRODUCT SPECIFICATION AND PROCESSING PARAMETERS: PS-43860-003.
4) PACKAGING SPECIFICATION: CONNECTOR ASSEMBLIES PACKAGED IN THERMOFORMED TRAYS PER MOLEX PACKAGING SPECIFICATION PK-43860-005.
5) APPLICATION SPECIFICATION: AS-43860-001
6) ALL UNTOLERANCED DIMENSIONS ARE SHOWN FOR REFERENCE ONLY.
7) CONFORMS TO FCC REGULATION PART 68.5 FOR MODULAR JACKS.
8) AVAILABLE WITH THE (2) SPECIFIED PANEL GROUND TABS OMITTED FOR SIDE TO SIDE STACKABILITY, PER THE ASSEMBLY MATERIAL NUMBER TABLE.
9) FOR CROSS REFERENCE OF RECOMMENDED LED'S, SEE MOLEX WEBSITE.
10) THIS PART CONFORMS TO CLASS B REQUIREMENTS OF COSMETIC SPECIFICATION PS-45499-002.

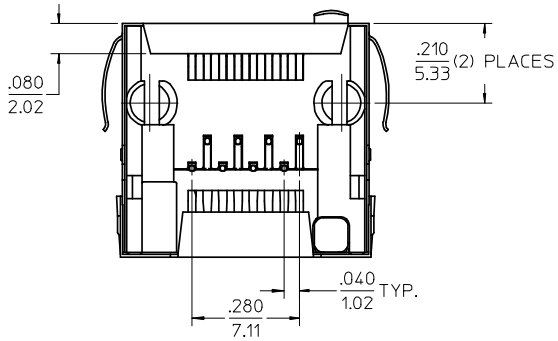

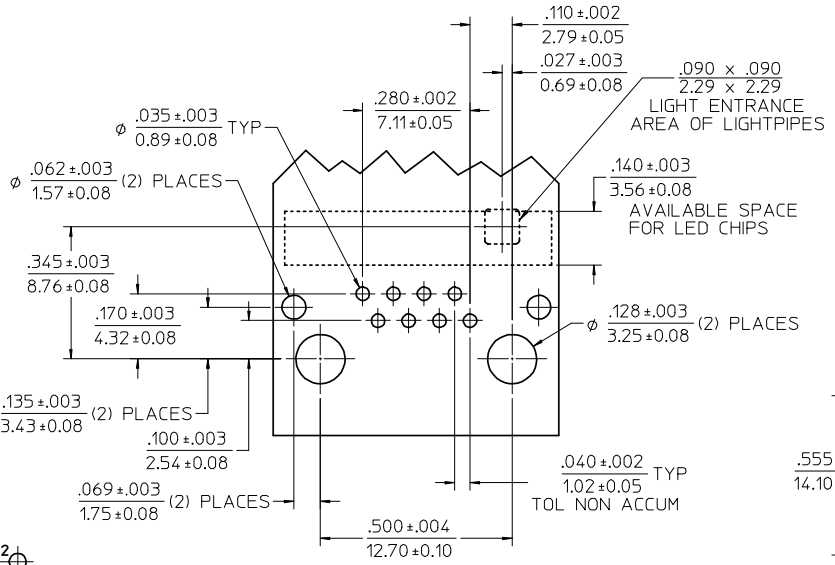

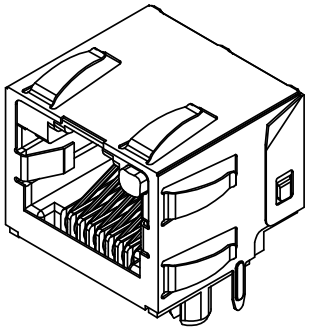

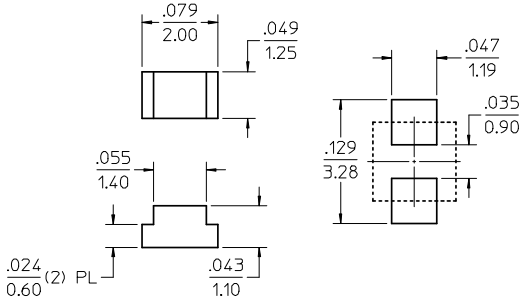

RECOMMENDED SMT LED SOLDER PATTERN
SCALE 10:1
(SEE NOTE 9)

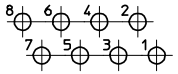

TYPICAL PC TERMINAL HOLE LAYOUT
SCALE 5:1

PC BOARD LAYOUT
COMPONENT SIDE OF BOARD
RECOMMENDED PCB THICKNESS: .062/1.57

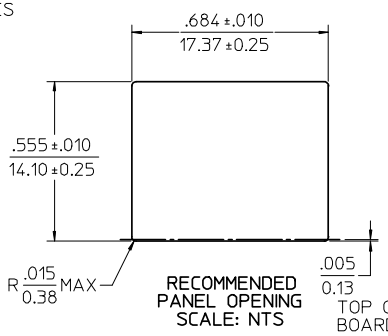

RECOMMENDED PANEL OPENING
SCALE: NTS

ASSEMBLY MATERIAL NUMBER	LIGHT PIPE MATERIAL	PANEL GROUND TABS
446201006	POLYCARBONATE	ALL
446201007	POLYCARBONATE	SEE NOTE 8
446201008	POLYSULFONE	ALL
446201009	POLYSULFONE	SEE NOTE 8

REV	DESCRIPTION
D2	ADD NOTE 5 & 10 EC NO: UCP2008-0965 DRWN:JBELL 2007/11/08 CH'KD:LSCHMIDT 2007/12/04 APPR:FSMITH 2007/12/05

QUALITY SYMBOLS
▼=0
▽=0

GENERAL TOLERANCES (UNLESS SPECIFIED)

	mm	INCH
4 PLACES	± ---	± ---
3 PLACES	± ---	± ---
2 PLACES	± ---	± ---
1 PLACE	± ---	± ---
ANGULAR ±1/2°		

DRAFT WHERE APPLICABLE MUST REMAIN WITHIN DIMENSIONS

DIMENSION STYLE: IN/MM
SCALE: 4:1
DESIGN UNITS: INCH
THIRD ANGLE PROJECTION

		DATE
DRAWN BY	MKAMAR	00/03/07
CHECKED BY	MKAMAR	00/03/07
APPROVED BY	JROBERTS	00/03/07

TITLE: RJ-45 INVERTED MODULAR JACK ASSEMBLY WITH RJ-11 KEEPOUT FEATURE

molex MOLEX INCORPORATED

MATERIAL NO.: SEE CHART
DOCUMENT NO.: SD-44620-001
SHEET NO.: 4 OF 4
SIZE: C

THIS DRAWING CONTAINS INFORMATION THAT IS PROPRIETARY TO MOLEX INCORPORATED AND SHOULD NOT BE USED WITHOUT WRITTEN PERMISSION

ООО «ЛайфЭлектроникс» “LifeElectronics” LLC

ИНН 7805602321 КПП 780501001 Р/С 40702810122510004610 ФАКБ "АБСОЛЮТ БАНК" (ЗАО) в г.Санкт-Петербурге К/С 30101810900000000703 БИК 044030703

Компания «Life Electronics» занимается поставками электронных компонентов импортного и отечественного производства от производителей и со складов крупных дистрибьюторов Европы, Америки и Азии.

С конца 2013 года компания активно расширяет линейку поставок компонентов по направлению коаксиальный кабель, кварцевые генераторы и конденсаторы (керамические, пленочные, электролитические), за счёт заключения дистрибьюторских договоров

Мы предлагаем:

- *Конкурентоспособные цены и скидки постоянным клиентам.*
- *Специальные условия для постоянных клиентов.*
- *Подбор аналогов.*
- *Поставку компонентов в любых объемах, удовлетворяющих вашим потребностям.*

- *Приемлемые сроки поставки, возможна ускоренная поставка.*
- *Доставку товара в любую точку России и стран СНГ.*
- *Комплексную поставку.*
- *Работу по проектам и поставку образцов.*
- *Формирование склада под заказчика.*

- *Сертификаты соответствия на поставляемую продукцию (по желанию клиента).*
- *Тестирование поставляемой продукции.*
- *Поставку компонентов, требующих военную и космическую приемку.*
- *Входной контроль качества.*
- *Наличие сертификата ISO.*

В составе нашей компании организован Конструкторский отдел, призванный помогать разработчикам, и инженерам.

Конструкторский отдел помогает осуществить:

- *Регистрацию проекта у производителя компонентов.*
- *Техническую поддержку проекта.*
- *Защиту от снятия компонента с производства.*
- *Оценку стоимости проекта по компонентам.*
- *Изготовление тестовой платы монтаж и пусконаладочные работы.*

Тел: +7 (812) 336 43 04 (многоканальный)
Email: org@lifeelectronics.ru

www.lifeelectronics.ru