LM285, LM385B

Micropower Voltage Reference Diodes

The LM285/LM385 series are micropower two−terminal bandgap voltage regulator diodes. Designed to operate over a wide current range of 10 μA to 20 mA, these devices feature exceptionally low dynamic impedance, low noise and stable operation over time and temperature. Tight voltage tolerances are achieved by on−chip trimming. The large dynamic operating range enables these devices to be used in applications with widely varying supplies with excellent regulation. Extremely low operating current make these devices ideal for micropower circuitry like portable instrumentation, regulators and other analog circuitry where extended battery life is required.

The LM285/LM385 series are packaged in a low cost TO−226 plastic case and are available in two voltage versions of 1.235 V and 2.500 V as denoted by the device suffix (see Ordering Information table). The LM285 is specified over a −40°C to +85°C temperature range while the LM385 is rated from 0°C to +70°C.

The LM385 is also available in a surface mount plastic package in voltages of 1.235 V and 2.500 V.

Features

- Operating Current from 10 μA to 20 mA
- 1.0%, 1.5%, 2.0% and 3.0% Initial Tolerance Grades
- Low Temperature Coefficient
- 1.0 Ω Dynamic Impedance
- Surface Mount Package Available
- Pb−Free Packages are Available

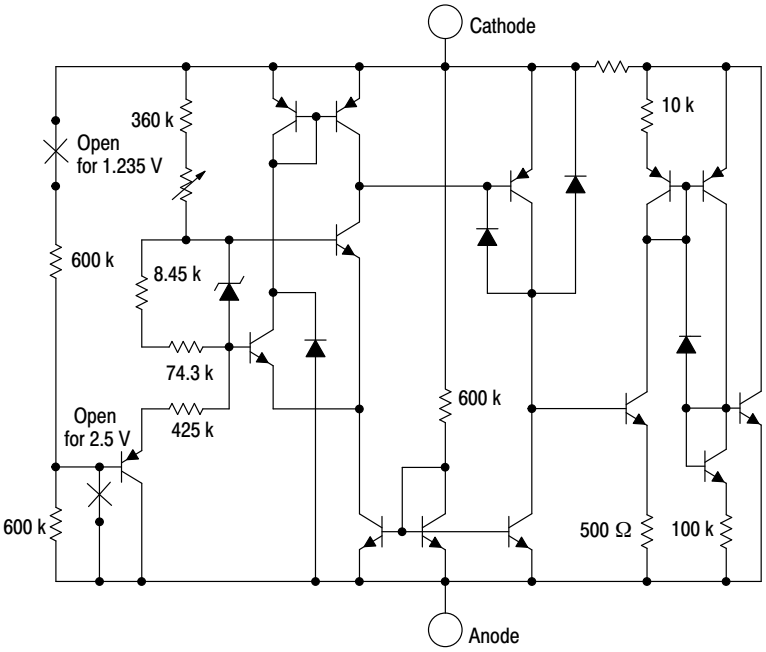

Figure 1. Representative Schematic Diagram

ON Semiconductor®

http://onsemi.com

MARKING DIAGRAMS

SOIC−8
D SUFFIX
CASE 751

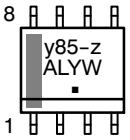

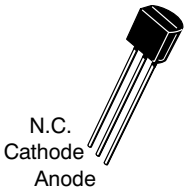

TO−92
(TO−226)
Z SUFFIX
CASE 29

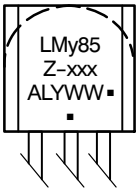

xxx	= 1.2 or 2.5
y	= 2 or 3
z	= 1 or 2
A	= Assembly Location
L	= Wafer Lot
Y	= Year
W, WW	= Work Week
▪	= Pb−Free Package

(Note: Microdot may be in either location)

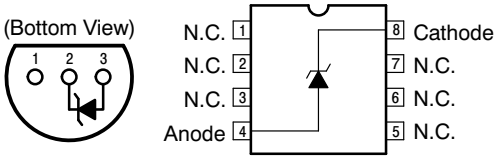

Standard Application

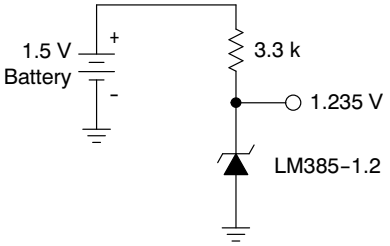

ORDERING INFORMATION

See detailed ordering and shipping information in the package dimensions section on page 6 of this data sheet.

© Semiconductor Components Industries, LLC, 2008

MAXIMUM RATINGS (T_A = 25°C, unless otherwise noted)

Rating	Symbol	Value	Unit
Reverse Current	I_R	30	mA
Forward Current	I_F	10	mA
Operating Ambient Temperature Range LM285 LM385	T_A	 −40 to +85 0 to +70	°C
Operating Junction Temperature	T_J	+150	°C
Storage Temperature Range	T_{stg}	−65 to + 150	°C
Electrostatic Discharge Sensitivity (ESD) Human Body Model (HBM) Machine Model (MM) Charged Device Model (CDM)	ESD	 4000 400 2000	V

Stresses exceeding Maximum Ratings may damage the device. Maximum Ratings are stress ratings only. Functional operation above the Recommended Operating Conditions is not implied. Extended exposure to stresses above the Recommended Operating Conditions may affect device reliability.

ELECTRICAL CHARACTERISTICS (T_A = 25°C, unless otherwise noted)

Characteristic	Symbol	LM285−1.2			LM385−1.2/LM385B−1.2			Unit
		Min	Typ	Max	Min	Typ	Max	
Reverse Breakdown Voltage ($I_{Rmin} \le I_R \le$ 20 mA)	$V_{(BR)R}$							V
LM285−1.2/LM385B−1.2		1.223	1.235	1.247	1.223	1.235	1.247	
$T_A = T_{low}$ to T_{high} (Note 1)		1.200	–	1.270	1.210	–	1.260	
LM385−1.2		–	–	–	1.205	1.235	1.260	
$T_A = T_{low}$ to T_{high} (Note 1)		–	–	–	1.192	–	1.273	
Minimum Operating Current	I_{Rmin}							μA
T_A = 25°C		–	8.0	10		8.0	15	
$T_A = T_{low}$ to T_{high} (Note 1)		–	–	20	–	–	20	
Reverse Breakdown Voltage Change with Current	$\Delta V_{(BR)R}$							mV
$I_{Rmin} \le I_R \le$ 1.0 mA, T_A = +25°C		–	–	1.0	–	–	1.0	
$T_A = T_{low}$ to T_{high} (Note 1)		–	–	1.5	–	–	1.5	
1.0 mA $\le I_R \le$ 20 mA, T_A = +25°C		–	–	10	–	–	20	
$T_A = T_{low}$ to T_{high} (Note 1)		–	–	20	–	–	25	
Reverse Dynamic Impedance I_R = 100 μA, T_A = +25°C	Z	–	0.6	–	–	0.6	–	Ω
Average Temperature Coefficient 10 μA $\le I_R \le$ 20 mA, $T_A = T_{low}$ to T_{high} (Note 1)	$\Delta V_{(BR)}/\Delta T$	–	80	–	–	80	–	ppm/°C
Wideband Noise (RMS) I_R = 100 μA, 10 Hz $\le f \le$ 10 kHz	n	–	60	–	–	60	–	μV
Long Term Stability I_R = 100 μA, T_A = +25°C ± 0.1°C	S	–	20	–	–	20	–	ppm/kHR
Reverse Breakdown Voltage ($I_{Rmin} \le I_R \le$ 20 mA)	$V_{(BR)R}$							V
LM285−2.5/LM385B−2.5		2.462	2.5	2.538	2.462	2.5	2.538	
$T_A = T_{low}$ to T_{high} (Note 1)		2.415	–	2.585	2.436	–	2.564	
LM385−2.5		–	–	–	2.425	2.5	2.575	
$T_A = T_{low}$ to T_{high} (Note 1)		–	–	–	2.400	–	2.600	
Minimum Operating Current	I_{Rmin}							μA
T_A = 25°C		–	13	20	–	13	20	
$T_A = T_{low}$ to T_{high} (Note 1)		–	–	30	–	–	30	

1. T_{low} = −40°C for LM285−1.2, LM285−2.5
   T_{high} = +85°C for LM285−1.2, LM285−2.5
   T_{low} = 0°C for LM385−1.2, LM385B−1.2, LM385−2.5, LM385B−2.5
   T_{high} = +70°C for LM385−1.2, LM385B−1.2, LM385−2.5, LM385B−2.5

ELECTRICAL CHARACTERISTICS (T_A = 25°C, unless otherwise noted)

Characteristic	Symbol	LM285−1.2			LM385−1.2/LM385B−1.2			Unit
		Min	Typ	Max	Min	Typ	Max	
Reverse Breakdown Voltage Change with Current	$\Delta V_{(BR)R}$							mV
$I_{Rmin} \leq I_R \leq$ 1.0 mA, T_A = +25°C		–	–	1.0	–	–	2.0	
$T_A = T_{low}$ to T_{high} (Note 2)		–	–	1.5	–	–	2.5	
1.0 mA $\leq I_R \leq$ 20 mA, T_A = +25°C		–	–	10	–	–	20	
$T_A = T_{low}$ to T_{high} (Note 2)		–	–	20	–	–	25	
Reverse Dynamic Impedance I_R = 100 μA, T_A = +25°C	Z	–	0.6	–	–	0.6	–	Ω
Average Temperature Coefficient 20 μA $\leq I_R \leq$ 20 mA, $T_A = T_{low}$ to T_{high} (Note 2)	$\Delta V_{(BR)}/\Delta T$	–	80	–	–	80	–	ppm/°C
Wideband Noise (RMS) I_R = 100 μA, 10 Hz $\leq f \leq$ 10 kHz	n	–	120	–	–	120	–	μV
Long Term Stability I_R = 100 μA, T_A = +25°C ± 0.1°C	S	–	20	–	–	20	–	ppm/kHR

2. T_{low} = −40°C for LM285−1.2, LM285−2.5
T_{high} = +85°C for LM285−1.2, LM285−2.5
T_{low} = 0°C for LM385−1.2, LM385B−1.2, LM385−2.5, LM385B−2.5
T_{high} = +70°C for LM385−1.2, LM385B−1.2, LM385−2.5, LM385B−2.5

TYPICAL PERFORMANCE CURVES FOR LM285−1.2/385−1.2/385B−1.2

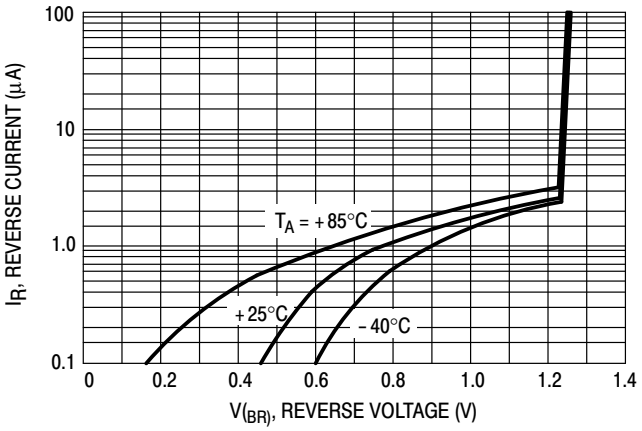

Figure 2. Reverse Characteristics

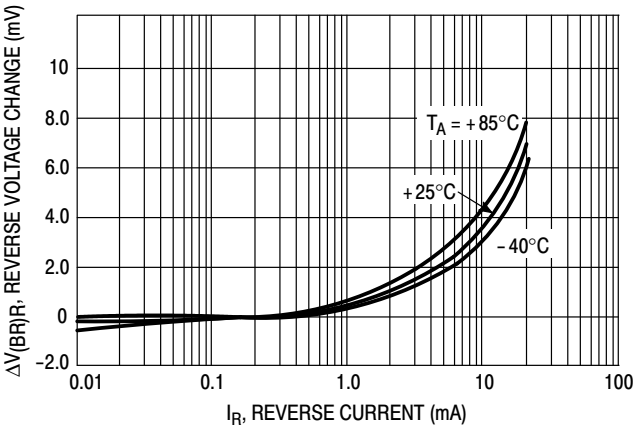

Figure 3. Reverse Characteristics

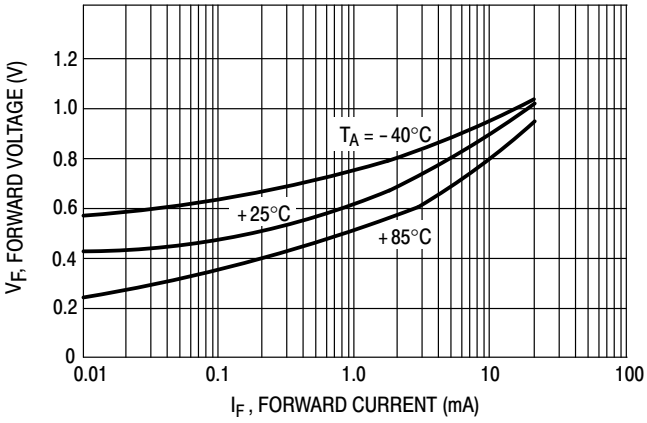

Figure 4. Forward Characteristics

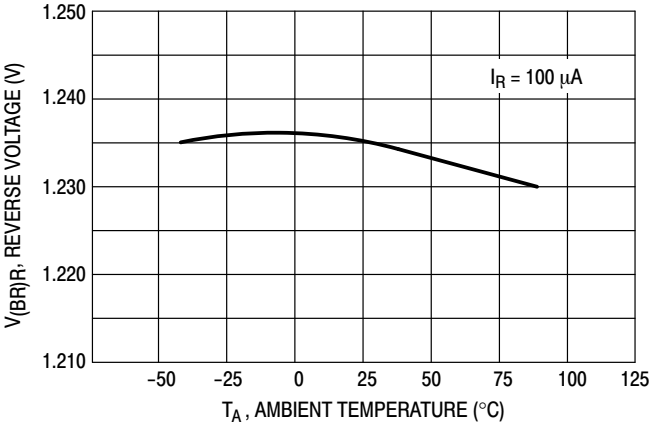

Figure 5. Temperature Drift

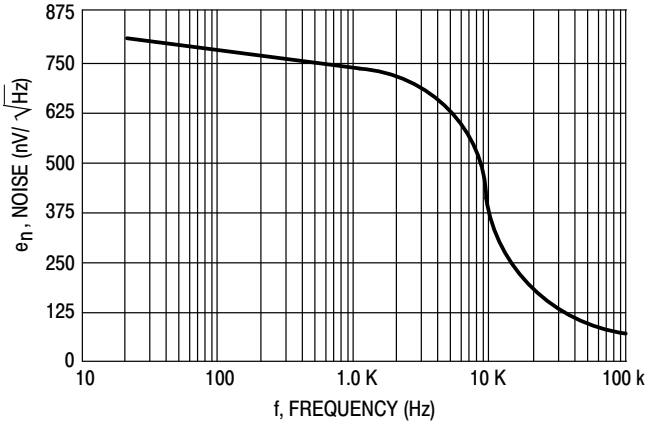

Figure 6. Noise Voltage

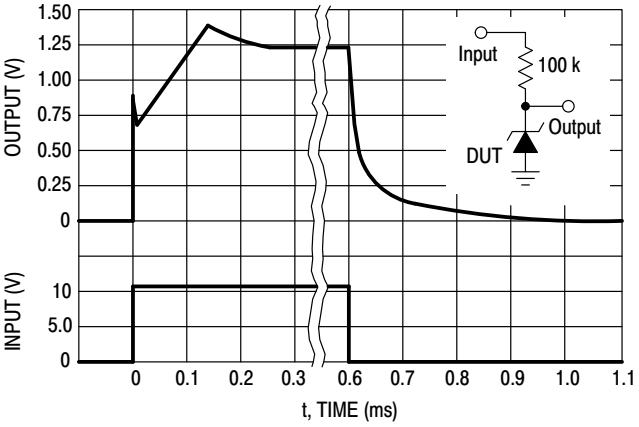

Figure 7. Response Time

TYPICAL PERFORMANCE CURVES FOR LM285−2.5/385−2.5/385B−2.5

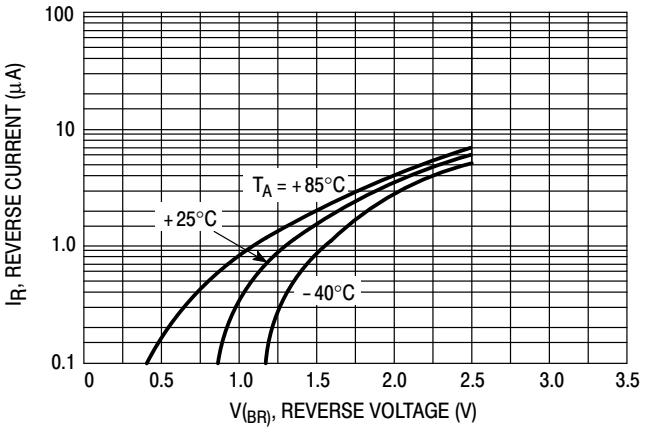

Figure 8. Reverse Characteristics

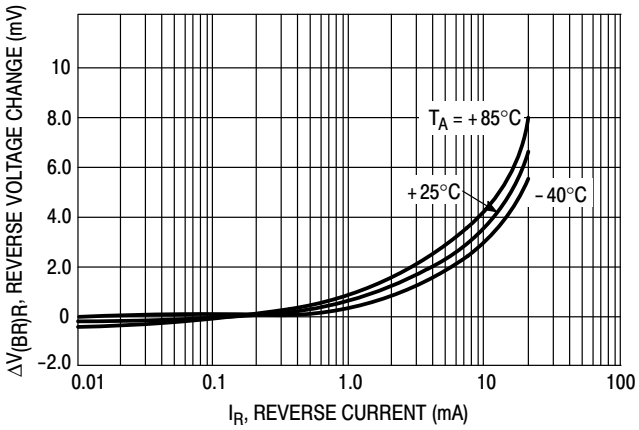

Figure 9. Reverse Characteristics

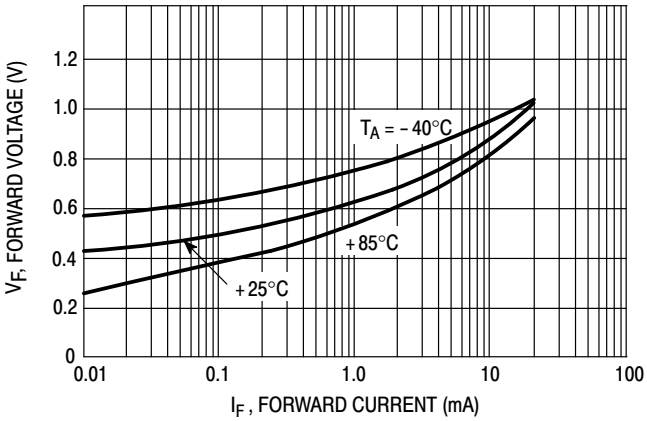

Figure 10. Forward Characteristics

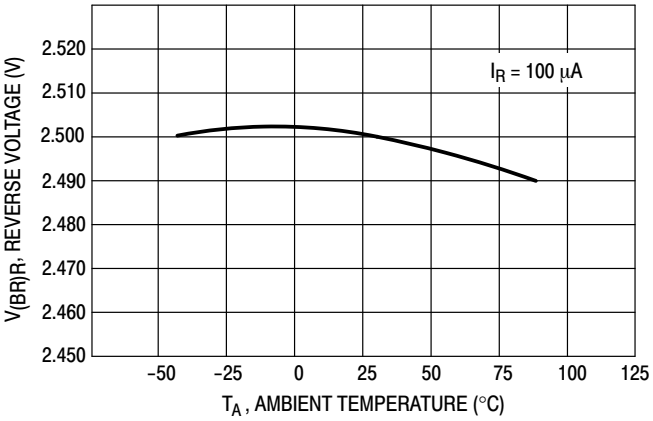

Figure 11. Temperature Drift

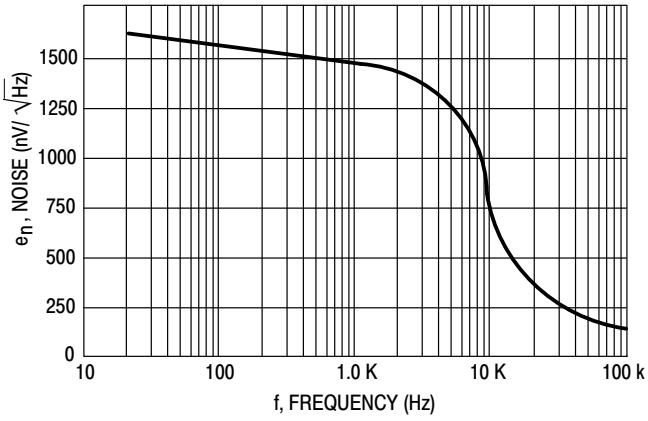

Figure 12. Noise Voltage

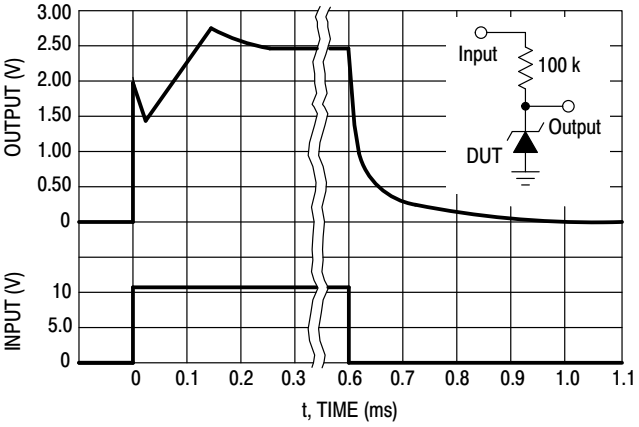

Figure 13. Response Time

ORDERING INFORMATION

Device	Operating Temperature Range	Reverse Break−Down Voltage	Package	Shipping†
LM285D−1.2	T_A = −40°C to +85°C	1.235 V	SOIC−8	98 Units / Rail
LM285D−1.2G			SOIC−8 (Pb−Free)	98 Units / Rail
LM285D−1.2R2			SOIC−8	2500 / Tape & Reel
LM285D−1.2R2G			SOIC−8 (Pb−Free)	2500 / Tape & Reel
LM285D−2.5		2.500 V	SOIC−8	98 Units / Rail
LM285D−2.5G			SOIC−8 (Pb−Free)	98 Units / Rail
LM285D−2.5R2			SOIC−8	2500 / Tape & Reel
LM285D−2.5R2G			SOIC−8 (Pb−Free)	2500 / Tape & Reel
LM285Z−1.2		1.235 V	TO−92	2000 Units / Bag
LM285Z−1.2G			TO−92 (Pb−Free)	2000 Units / Bag
LM285Z−2.5		2.500 V	TO−92	2000 Units / Bag
LM285Z−2.5G			TO−92 (Pb−Free)	2000 Units / Bag
LM285Z−1.2RA		1.235 V	TO−92	2000 / Tape & Reel
LM285Z−1.2RAG			TO−92 (Pb−Free)	2000 / Tape & Reel
LM285Z−2.5RA		2.500 V	TO−92	2000 / Tape & Reel
LM285Z−2.5RAG			TO−92 (Pb−Free)	2000 / Tape & Reel
LM285Z−2.5RP			TO−92	2000 Units / Fan−Fold
LM285Z−2.5RPG			TO−92 (Pb−Free)	2000 Units / Fan−Fold
LM385BD−1.2	T_A = 0°C to +70°C	1.235 V	SOIC−8	98 Units / Rail
LM385BD−1.2G			SOIC−8 (Pb−Free)	98 Units / Rail
LM385BD−1.2R2			SOIC−8	2500 / Tape & Reel
LM385BD−1.2R2G			SOIC−8 (Pb−Free)	2500 / Tape & Reel
LM385BD−2.5		2.500 V	SOIC−8	98 Units / Rail
LM385BD−2.5G			SOIC−8 (Pb−Free)	98 Units / Rail
LM385BD−2.5R2			SOIC−8	2500 / Tape & Reel
LM385BD−2.5R2G			SOIC−8 (Pb−Free)	2500 / Tape & Reel
LM385BZ−1.2		1.235 V	TO−92	2000 Units / Bag
LM385BZ−1.2G			TO−92 (Pb−Free)	2000 Units / Bag
LM385BZ−1.2RA			TO−92	2000 / Tape & Reel
LM385BZ−1.2RAG			TO−92 (Pb−Free)	2000 / Tape & Reel

†For information on tape and reel specifications, including part orientation and tape sizes, please refer to our Tape and Reel Packaging Specifications Brochure, BRD8011/D.

ORDERING INFORMATION

Device	Operating Temperature Range	Reverse Break−Down Voltage	Package	Shipping†
LM385BZ−2.5	T_A = 0°C to +70°C	2.500 V	TO−92	2000 Units / Bag
LM385BZ−2.5G			TO−92 (Pb−Free)	2000 Units / Bag
LM385BZ−2.5RA			TO−92	2000 / Tape & Reel
LM385BZ−2.5RAG			TO−92 (Pb−Free)	2000 / Tape & Reel
LM385D−1.2		1.235 V	SOIC−8	98 Units / Rail
LM385D−1.2G			SOIC−8 (Pb−Free)	98 Units / Rail
LM385D−1.2R2			SOIC−8	2500 / Tape & Reel
LM385D−1.2R2G			SOIC−8 (Pb−Free)	2500 / Tape & Reel
LM385D−2.5		2.500 V	SOIC−8	98 Units / Rail
LM385D−2.5G			SOIC−8 (Pb−Free)	98 Units / Rail
LM385D−2.5R2			SOIC−8	2500 / Tape & Reel
LM385D−2.5R2G			SOIC−8 (Pb−Free)	2500 / Tape & Reel
LM385Z−1.2		1.235 V	TO−92	2000 Units / Bag
LM385Z−1.2G			TO−92 (Pb−Free)	2000 Units / Bag
LM385Z−1.2RA			TO−92	2000 / Tape & Reel
LM385Z−1.2RAG			TO−92 (Pb−Free)	2000 / Tape & Reel
LM385Z−1.2RP			TO−92	2000 / Ammo Box
LM385Z−1.2RPG			TO−92 (Pb−Free)	2000 / Ammo Box
LM385Z−2.5		2.500 V	TO−92	2000 Units / Bag
LM385Z−2.5G			TO−92 (Pb−Free)	2000 Units / Bag
LM385Z−2.5RP			TO−92	2000 / Ammo Box
LM385Z−2.5RPG			TO−92 (Pb−Free)	2000 / Ammo Box

†For information on tape and reel specifications, including part orientation and tape sizes, please refer to our Tape and Reel Packaging Specifications Brochure, BRD8011/D.

PACKAGE DIMENSIONS

TO−92 (TO−226)
CASE 29−11
ISSUE AM

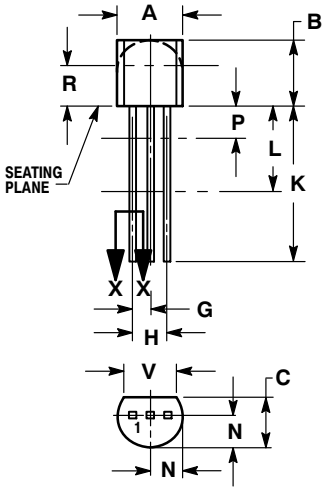

STRAIGHT LEAD
BULK PACK

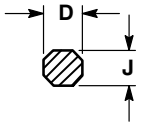

SECTION X−X

NOTES:
1. DIMENSIONING AND TOLERANCING PER ANSI Y14.5M, 1982.
2. CONTROLLING DIMENSION: INCH.
3. CONTOUR OF PACKAGE BEYOND DIMENSION R IS UNCONTROLLED.
4. LEAD DIMENSION IS UNCONTROLLED IN P AND BEYOND DIMENSION K MINIMUM.

	INCHES		MILLIMETERS	
DIM	MIN	MAX	MIN	MAX
A	0.175	0.205	4.45	5.20
B	0.170	0.210	4.32	5.33
C	0.125	0.165	3.18	4.19
D	0.016	0.021	0.407	0.533
G	0.045	0.055	1.15	1.39
H	0.095	0.105	2.42	2.66
J	0.015	0.020	0.39	0.50
K	0.500	---	12.70	---
L	0.250	---	6.35	---
N	0.080	0.105	2.04	2.66
P	---	0.100	---	2.54
R	0.115	---	2.93	---
V	0.135	---	3.43	---

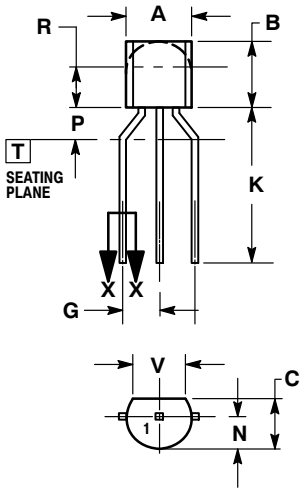

BENT LEAD
TAPE & REEL
AMMO PACK

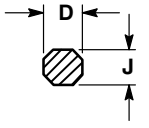

SECTION X−X

NOTES:
1. DIMENSIONING AND TOLERANCING PER ASME Y14.5M, 1994.
2. CONTROLLING DIMENSION: MILLIMETERS.
3. CONTOUR OF PACKAGE BEYOND DIMENSION R IS UNCONTROLLED.
4. LEAD DIMENSION IS UNCONTROLLED IN P AND BEYOND DIMENSION K MINIMUM.

	MILLIMETERS	
DIM	MIN	MAX
A	4.45	5.20
B	4.32	5.33
C	3.18	4.19
D	0.40	0.54
G	2.40	2.80
J	0.39	0.50
K	12.70	---
N	2.04	2.66
P	1.50	4.00
R	2.93	---
V	3.43	---

PACKAGE DIMENSIONS

SOIC−8 NB
CASE 751−07
ISSUE AJ

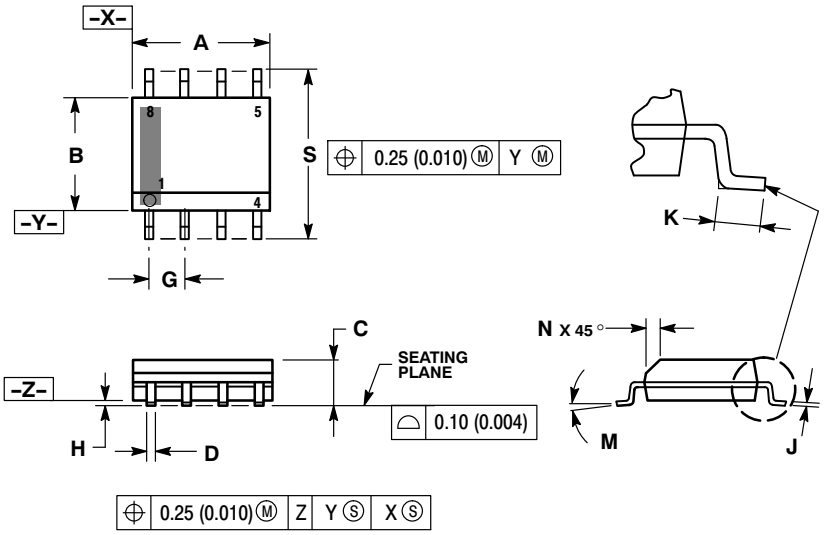

NOTES:
1. DIMENSIONING AND TOLERANCING PER ANSI Y14.5M, 1982.
2. CONTROLLING DIMENSION: MILLIMETER.
3. DIMENSION A AND B DO NOT INCLUDE MOLD PROTRUSION.
4. MAXIMUM MOLD PROTRUSION 0.15 (0.006) PER SIDE.
5. DIMENSION D DOES NOT INCLUDE DAMBAR PROTRUSION. ALLOWABLE DAMBAR PROTRUSION SHALL BE 0.127 (0.005) TOTAL IN EXCESS OF THE D DIMENSION AT MAXIMUM MATERIAL CONDITION.
6. 751−01 THRU 751−06 ARE OBSOLETE. NEW STANDARD IS 751−07.

	MILLIMETERS		INCHES	
DIM	MIN	MAX	MIN	MAX
A	4.80	5.00	0.189	0.197
B	3.80	4.00	0.150	0.157
C	1.35	1.75	0.053	0.069
D	0.33	0.51	0.013	0.020
G	1.27 BSC		0.050 BSC	
H	0.10	0.25	0.004	0.010
J	0.19	0.25	0.007	0.010
K	0.40	1.27	0.016	0.050
M	0 °	8 °	0 °	8 °
N	0.25	0.50	0.010	0.020
S	5.80	6.20	0.228	0.244

SOLDERING FOOTPRINT*

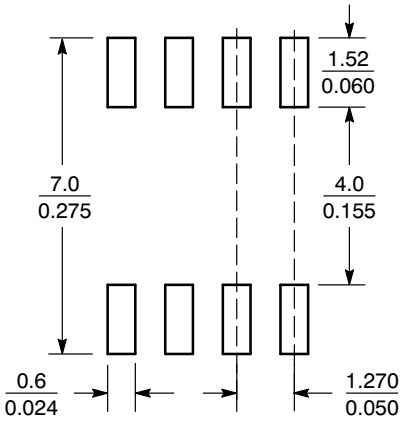

SCALE 6:1 (mm / inches)

*For additional information on our Pb−Free strategy and soldering details, please download the ON Semiconductor Soldering and Mounting Techniques Reference Manual, SOLDERRM/D.

ON Semiconductor and ON are registered trademarks of Semiconductor Components Industries, LLC (SCILLC). SCILLC reserves the right to make changes without further notice to any products herein. SCILLC makes no warranty, representation or guarantee regarding the suitability of its products for any particular purpose, nor does SCILLC assume any liability arising out of the application or use of any product or circuit, and specifically disclaims any and all liability, including without limitation special, consequential or incidental damages. “Typical” parameters which may be provided in SCILLC data sheets and/or specifications can and do vary in different applications and actual performance may vary over time. All operating parameters, including “Typicals” must be validated for each customer application by customer’s technical experts. SCILLC does not convey any license under its patent rights nor the rights of others. SCILLC products are not designed, intended, or authorized for use as components in systems intended for surgical implant into the body, or other applications intended to support or sustain life, or for any other application in which the failure of the SCILLC product could create a situation where personal injury or death may occur. Should Buyer purchase or use SCILLC products for any such unintended or unauthorized application, Buyer shall indemnify and hold SCILLC and its officers, employees, subsidiaries, affiliates, and distributors harmless against all claims, costs, damages, and expenses, and reasonable attorney fees arising out of, directly or indirectly, any claim of personal injury or death associated with such unintended or unauthorized use, even if such claim alleges that SCILLC was negligent regarding the design or manufacture of the part. SCILLC is an Equal Opportunity/Affirmative Action Employer. This literature is subject to all applicable copyright laws and is not for resale in any manner.

PUBLICATION ORDERING INFORMATION

LITERATURE FULFILLMENT:
Literature Distribution Center for ON Semiconductor
P.O. Box 5163, Denver, Colorado 80217 USA
Phone: 303−675−2175 or 800−344−3860 Toll Free USA/Canada
Fax: 303−675−2176 or 800−344−3867 Toll Free USA/Canada
Email: orderlit@onsemi.com

N. American Technical Support: 800−282−9855 Toll Free USA/Canada
Europe, Middle East and Africa Technical Support:
Phone: 421 33 790 2910
Japan Customer Focus Center
Phone: 81−3−5773−3850

ON Semiconductor Website: **www.onsemi.com**

Order Literature: http://www.onsemi.com/orderlit

For additional information, please contact your local Sales Representative

ООО «ЛайфЭлектроникс» “LifeElectronics” LLC

ИНН 7805602321 КПП 780501001 Р/С 40702810122510004610 ФАКБ "АБСОЛЮТ БАНК" (ЗАО) в г.Санкт-Петербурге К/С 30101810900000000703 БИК 044030703

Компания «Life Electronics» занимается поставками электронных компонентов импортного и отечественного производства от производителей и со складов крупных дистрибьюторов Европы, Америки и Азии.

С конца 2013 года компания активно расширяет линейку поставок компонентов по направлению коаксиальный кабель, кварцевые генераторы и конденсаторы (керамические, пленочные, электролитические), за счёт заключения дистрибьюторских договоров

Мы предлагаем:

- *Конкурентоспособные цены и скидки постоянным клиентам.*
- *Специальные условия для постоянных клиентов.*
- *Подбор аналогов.*
- *Поставку компонентов в любых объемах, удовлетворяющих вашим потребностям.*

- *Приемлемые сроки поставки, возможна ускоренная поставка.*
- *Доставку товара в любую точку России и стран СНГ.*
- *Комплексную поставку.*
- *Работу по проектам и поставку образцов.*
- *Формирование склада под заказчика.*

- *Сертификаты соответствия на поставляемую продукцию (по желанию клиента).*
- *Тестирование поставляемой продукции.*
- *Поставку компонентов, требующих военную и космическую приемку.*
- *Входной контроль качества.*
- *Наличие сертификата ISO.*

В составе нашей компании организован Конструкторский отдел, призванный помогать разработчикам, и инженерам.

Конструкторский отдел помогает осуществить:

- *Регистрацию проекта у производителя компонентов.*
- *Техническую поддержку проекта.*
- *Защиту от снятия компонента с производства.*
- *Оценку стоимости проекта по компонентам.*
- *Изготовление тестовой платы монтаж и пусконаладочные работы.*

Тел: +7 (812) 336 43 04 (многоканальный)
Email: org@lifeelectronics.ru

www.lifeelectronics.ru