FAIRCHILD™

Is Now Part of

ON Semiconductor®

To learn more about ON Semiconductor, please visit our website at
www.onsemi.com

Please note: As part of the Fairchild Semiconductor integration, some of the Fairchild orderable part numbers will need to change in order to meet ON Semiconductor's system requirements. Since the ON Semiconductor product management systems do not have the ability to manage part nomenclature that utilizes an underscore (_), the underscore (_) in the Fairchild part numbers will be changed to a dash (-). This document may contain device numbers with an underscore (_). Please check the ON Semiconductor website to verify the updated device numbers. The most current and up-to-date ordering information can be found at www.onsemi.com. Please email any questions regarding the system integration to Fairchild_questions@onsemi.com.

ON Semiconductor and the ON Semiconductor logo are trademarks of Semiconductor Components Industries, LLC dba ON Semiconductor or its subsidiaries in the United States and/or other countries. ON Semiconductor owns the rights to a number of patents, trademarks, copyrights, trade secrets, and other intellectual property. A listing of ON Semiconductor's product/patent coverage may be accessed at www.onsemi.com/site/pdf/Patent-Marking.pdf. ON Semiconductor reserves the right to make changes without further notice to any products herein. ON Semiconductor makes no warranty, representation or guarantee regarding the suitability of its products for any particular purpose, nor does ON Semiconductor assume any liability arising out of the application or use of any product or circuit, and specifically disclaims any and all liability, including without limitation special, consequential or incidental damages. Buyer is responsible for its products and applications using ON Semiconductor products, including compliance with all laws, regulations and safety requirements or standards, regardless of any support or applications information provided by ON Semiconductor. "Typical" parameters which may be provided in ON Semiconductor data sheets and/or specifications can and do vary in different applications and actual performance may vary over time. All operating parameters, including "Typicals" must be validated for each customer application by customer's technical experts. ON Semiconductor does not convey any license under its patent rights nor the rights of others. ON Semiconductor products are not designed, intended, or authorized for use as a critical component in life support systems or any FDA Class 3 medical devices or medical devices with a same or similar classification in a foreign jurisdiction or any devices intended for implantation in the human body. Should Buyer purchase or use ON Semiconductor products for any such unintended or unauthorized application, Buyer shall indemnify and hold ON Semiconductor and its officers, employees, subsidiaries, affiliates, and distributors harmless against all claims, costs, damages, and expenses, and reasonable attorney fees arising out of, directly or indirectly, any claim of personal injury or death associated with such unintended or unauthorized use, even if such claim alleges that ON Semiconductor was negligent regarding the design or manufacture of the part. ON Semiconductor is an Equal Opportunity/Affirmative Action Employer. This literature is subject to all applicable copyright laws and is not for resale in any manner.

December 2014

4N29M, 4N30M, 4N32M, 4N33M, H11B1M, TIL113M
6-Pin DIP General Purpose Photodarlington Optocoupler

Features

- High Sensitivity to Low Input Drive Current
- Meets or Exceeds All JEDEC Registered Specifications
- Safety and Regulatory Approvals:
  - UL1577, 4,170 VAC_{RMS} for 1 Minute
- DIN-EN/IEC60747-5-5, 850 V Peak Working Insulation Voltage

Applications

- Low Power Logic Circuits
- Telecommunications Equipment
- Portable Electronics
- Solid State Relays
- Interfacing Coupling Systems of Different Potentials and Impedances

Description

The 4N29M, 4N30M, 4N32M, 4N33M, H11B1M, and TIL113M have a gallium arsenide infrared emitter optically coupled to a silicon planar photodarlington.

Schematic

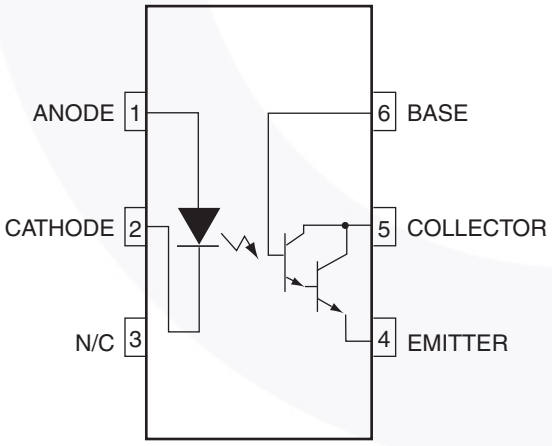

Figure 1. Schematic

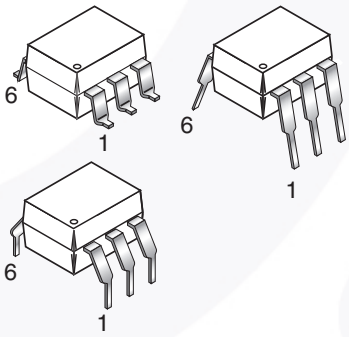

Figure 2. Package Outlines

©2007 Fairchild Semiconductor Corporation

Safety and Insulation Ratings

As per DIN EN/IEC 60747-5-5, this optocoupler is suitable for “safe electrical insulation” only within the safety limit data. Compliance with the safety ratings shall be ensured by means of protective circuits.

Parameter		Characteristics
Installation Classifications per DIN VDE 0110/1.89 Table 1, For Rated Mains Voltage	< 150 V_{RMS}	I–IV
	< 300 V_{RMS}	I–IV
Climatic Classification		55/100/21
Pollution Degree (DIN VDE 0110/1.89)		2
Comparative Tracking Index		175

Symbol	Parameter	Value	Unit
V_{PR}	Input-to-Output Test Voltage, Method A, V_{IORM} x 1.6 = V_{PR}, Type and Sample Test with t_m = 10 s, Partial Discharge < 5 pC	1360	V_{peak}
	Input-to-Output Test Voltage, Method B, V_{IORM} x 1.875 = V_{PR}, 100% Production Test with t_m = 1 s, Partial Discharge < 5 pC	1594	V_{peak}
V_{IORM}	Maximum Working Insulation Voltage	850	V_{peak}
V_{IOTM}	Highest Allowable Over-Voltage	6000	V_{peak}
	External Creepage	≥ 7	mm
	External Clearance	≥ 7	mm
	External Clearance (for Option TV, 0.4" Lead Spacing)	≥ 10	mm
DTI	Distance Through Insulation (Insulation Thickness)	≥ 0.5	mm
T_S	Case Temperature(1)	175	°C
$I_{S,INPUT}$	Input Current(1)	350	mA
$P_{S,OUTPUT}$	Output Power(1)	800	mW
R_{IO}	Insulation Resistance at T_S, V_{IO} = 500 V(1)	> 10^9	Ω

Note:

1. Safety limit values – maximum values allowed in the event of a failure.

Absolute Maximum Ratings

Stresses exceeding the absolute maximum ratings may damage the device. The device may not function or be operable above the recommended operating conditions and stressing the parts to these levels is not recommended. In addition, extended exposure to stresses above the recommended operating conditions may affect device reliability. The absolute maximum ratings are stress ratings only.

Symbol	Parameter	Value	Unit
TOTAL DEVICE			
T_{STG}	Storage Temperature	-40 to +125	°C
T_{OPR}	Operating Temperature	-40 to +100	°C
T_J	Junction Temperature	-40 to +125	°C
T_{SOL}	Lead Solder Temperature	260 for 10 seconds	°C
P_D	Total Device Power Dissipation @ T_A = 25°C	270	mW
	Derate Above 25°C	3.3	mW/°C
EMITTER			
I_F	Continuous Forward Current	80	mA
V_R	Reverse Voltage	3	V
I_F(pk)	Forward Current – Peak (300 µs, 2% Duty Cycle)	3.0	A
P_D	LED Power Dissipation @ T_A = 25°C	120	mW
	Derate above 25°C	2.0	mW/°C
DETECTOR			
BV_{CEO}	Collector-Emitter Breakdown Voltage	30	V
BV_{CBO}	Collector-Base Breakdown Voltage	30	V
BV_{ECO}	Emitter-Collector Breakdown Voltage	5	V
P_D	Detector Power Dissipation @ T_A = 25°C	150	mW
	Derate Above 25°C	2.0	mW/°C
I_C	Continuous Collector Current	150	mA

Electrical Characteristics

T_A = 25°C Unless otherwise specified.

Individual Component Characteristics

Symbol	Parameter	Test Conditions	Device	Min.	Typ.	Max.	Unit
EMITTER							
V_F	Input Forward Voltage(2)	I_F = 10 mA	4NXXM		1.2	1.5	V
			H11B1M, TIL113M	0.8	1.2	1.5	V
I_R	Reverse Leakage Current(2)	V_R = 3.0 V	4NXXM		0.001	100	µA
		V_R = 6.0 V	H11B1M, TIL113M		0.001	10	µA
C	Capacitance(2)	V_F = 0V, f = 1.0 MHz	All		150		pF
DETECTOR							
BV_{CEO}	Collector-Emitter Breakdown Voltage(2)	I_C = 1.0 mA, I_B = 0	4NXXM, TIL113M	30	60		V
			H11B1M	25	60		V
BV_{CBO}	Collector-Base Breakdown Voltage(2)	I_C = 100 µA, I_E = 0	All	30	100		V
BV_{ECO}	Emitter-Collector Breakdown Voltage(2)	I_E = 100 µA, I_B = 0	4NXXM	5.0	10		V
			H11B1M, TIL113M	7	10		V
I_{CEO}	Collector-Emitter Dark Current(2)	V_{CE} = 10 V, Base Open	All		1	100	nA

Notes:

2. Indicates JEDEC registered data.

Electrical Characteristics (Continued)

T_A = 25°C Unless otherwise specified.

Transfer Characteristics

Symbol	Parameter	Test Conditions	Device	Min.	Typ.	Max.	Unit
DC CHARACTERISTICS							
$I_{C(CTR)}$	Collector Output Current(3)(4)(5)	I_F = 10 mA, V_{CE} = 10 V, I_B = 0	4N32M, 4N33M	50 (500)			mA (%)
			4N29M, 4N30M	10 (100)			mA (%)
		I_F = 1 mA, V_{CE} = 5 V	H11B1M	5 (500)			mA (%)
		I_F = 10 mA, V_{CE} = 1 V	TIL113M	30 (300)			mA (%)
$V_{CE(SAT)}$	Saturation Voltage(3)(5)	I_F = 8 mA, I_C = 2.0 mA	4NXXM			1.0	V
			TIL113M			1.25	V
		I_F = 1 mA, I_C = 1 mA	H11B1M			1.0	V
AC CHARACTERISTICS							
t_{on}	Turn-on Time	I_F = 200 mA, I_C = 50 mA, V_{CC} = 10 V, R_L = 100 Ω	4NXXM, TIL113M			5.0	µs
		I_F = 10 mA, V_{CE} = 10 V, R_L = 100 Ω	H11B1M		25		µs
t_{off}	Turn-off Time	I_F = 200 mA, I_C = 50 mA, V_{CC} = 10 V, R_L = 100 Ω	4N32M, 4N33M, TIL113M			100	µs
			4N29M, 4N30M			40	µs
		I_F = 10 mA, V_{CE} = 10 V, R_L = 100 Ω	H11B1M		18		µs
BW	Bandwidth(6)(7)				30		kHz

Notes:

3. Indicates JEDEC registered data.
4. The current transfer ratio(I_C / I_F) is the ratio of the detector collector current to the LED input current.
5. Pulse test: pulse width = 300 µs, duty cycle ≤ 2.0% .
6. I_F adjusted to I_C = 2.0 mA and I_C = 0.7 mA rms.
7. The frequency at which I_C is 3 dB down from the 1 kHz value.

Isolation Characteristics

Symbol	Characteristic	Test Conditions	Min.	Typ.	Max.	Unit
V_{ISO}	Input-Output Isolation Voltage	t = 1 Minute	4170			VAC_{RMS}
C_{ISO}	Isolation Capacitance	V_{I-O} = 0 V, f = 1 MHz		0.2		pF
R_{ISO}	Isolation Resistance	V_{I-O} = ±500 VDC, T_A = 25°C	10^{11}			Ω

Typical Performance Curves

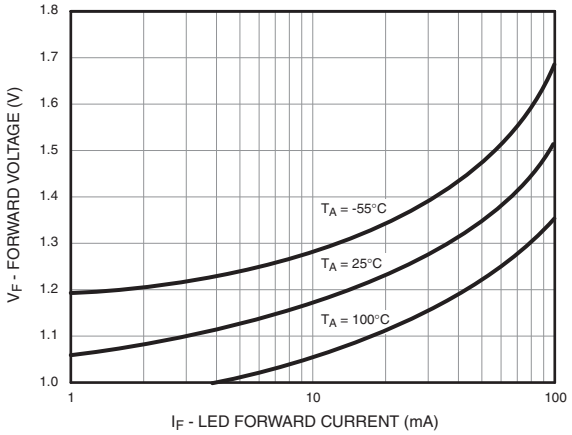

Figure 3. LED Forward Voltage vs. Forward Current

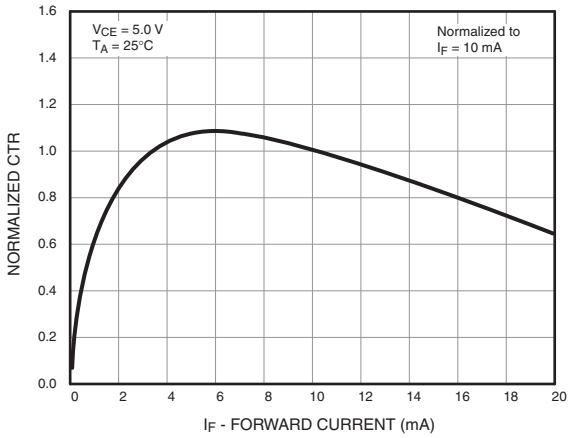

Figure 4. Normalized CTR vs. Forward Current

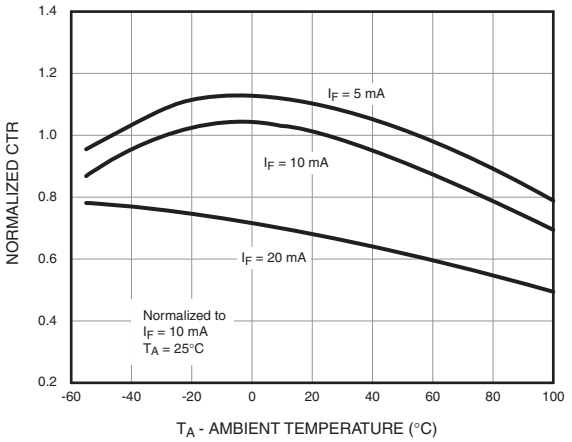

Figure 5. Normalized CTR vs. Ambient Temperature

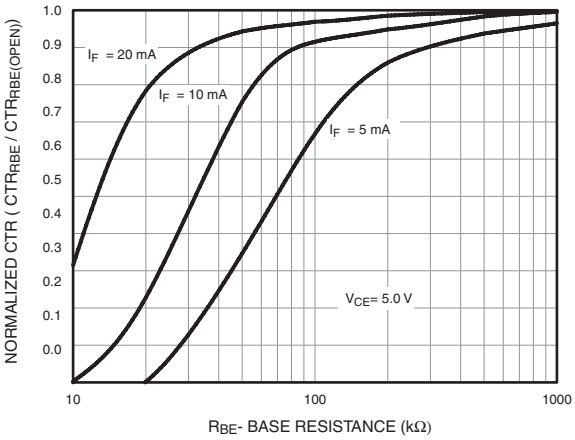

Figure 6. CTR vs. RBE (Unsaturated)

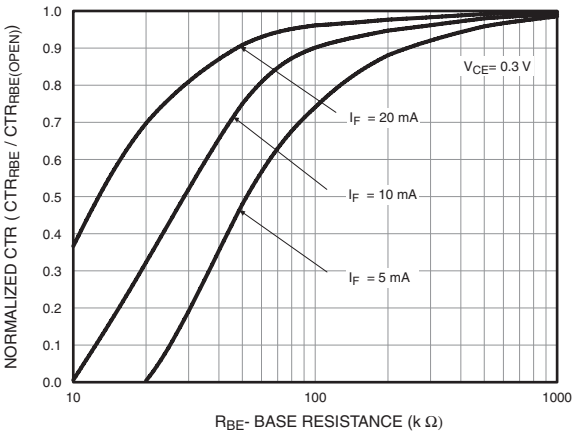

Figure 7. CTR vs. RBE (Saturated)

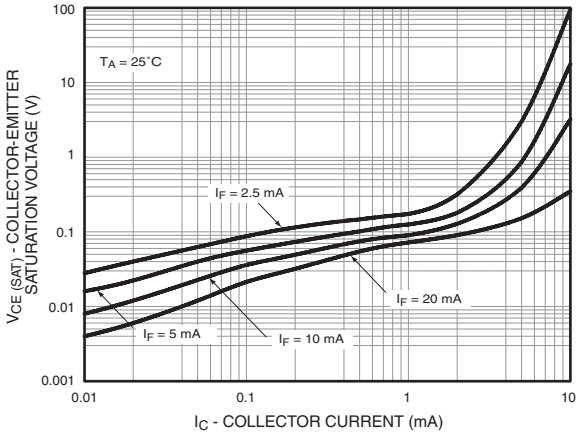

Figure 8. Collector-Emitter Saturation Voltage vs. Collector Current

Typical Performance Curves (Continued)

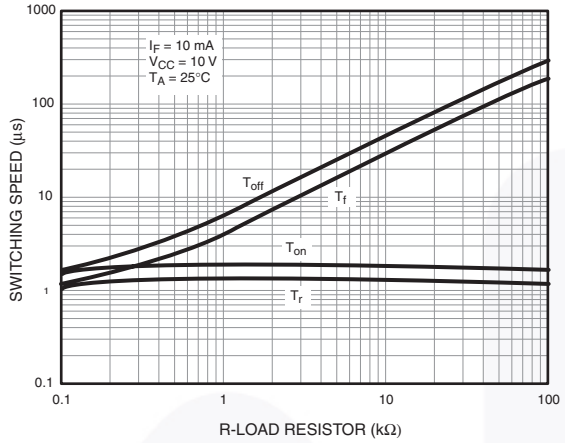

Figure 9. Switching Speed vs. Load Resistor

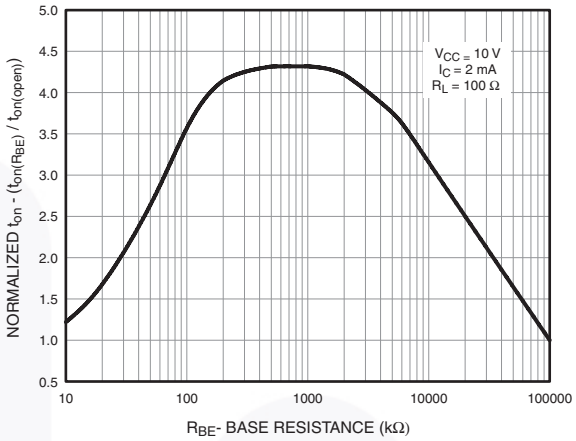

Figure 10. Normalized t_{on} vs. R_{BE}

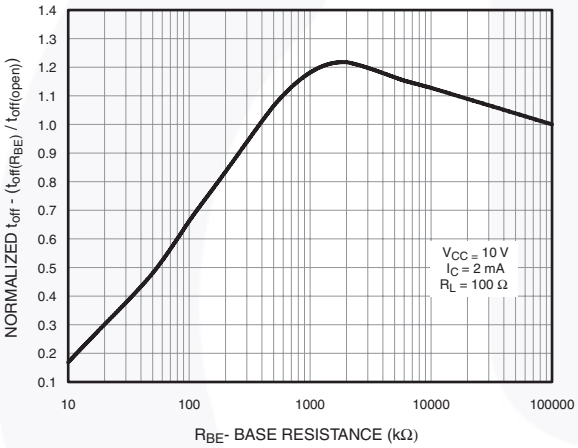

Figure 11. Normalized t_{off} vs. R_{BE}

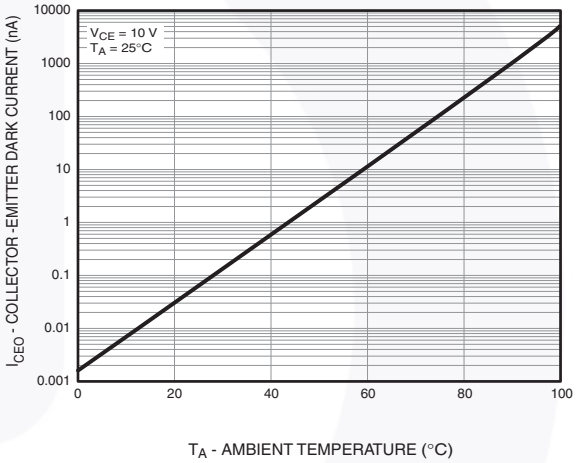

Figure 12. Dark Current vs. Ambient Temperature

Switching Time Test Circuit and Waveform

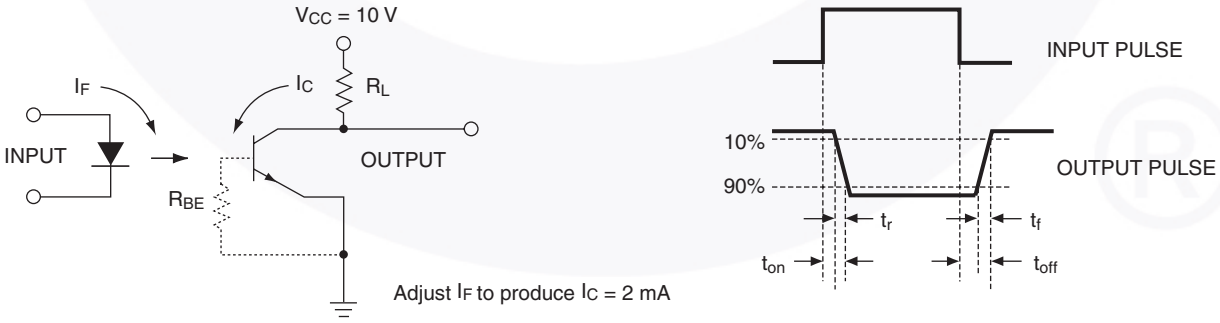

Figure 13. Switching Time Test Circuit and Waveform

Reflow Profile

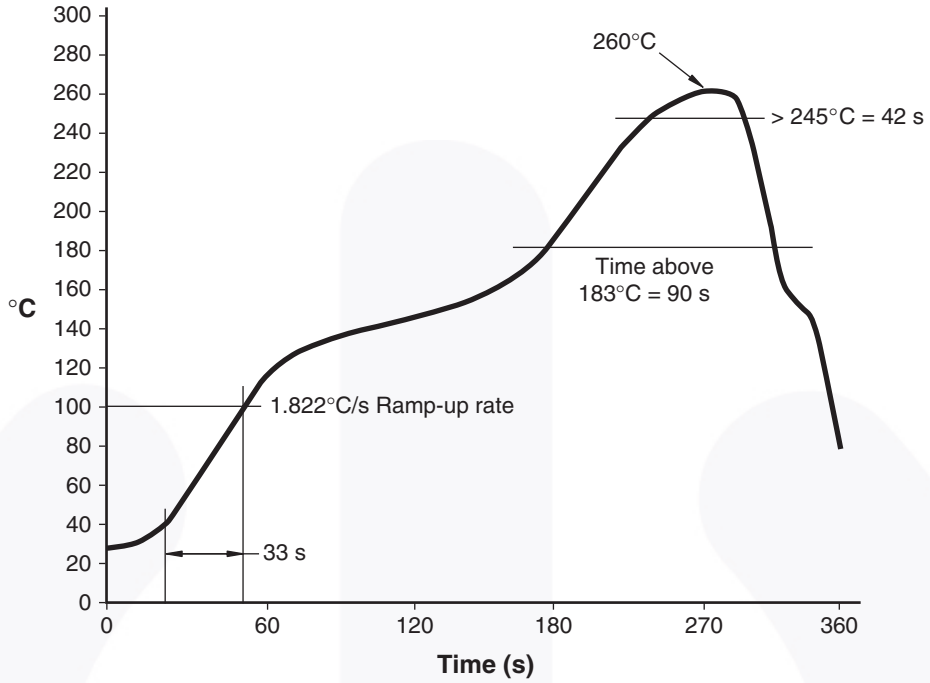

Figure 14. Reflow Profile

Ordering Information

Part Number	Package	Packing Method
4N29M	DIP 6-Pin	Tube (50 Units)
4N29SM	SMT 6-Pin (Lead Bend)	Tube (50 Units)
4N29SR2M	SMT 6-Pin (Lead Bend)	Tape and Reel (1000 Units)
4N29VM	DIP 6-Pin, DIN EN/IEC60747-5-5 Option	Tube (50 Units)
4N29SVM	SMT 6-Pin (Lead Bend), DIN EN/IEC60747-5-5 Option	Tube (50 Units)
4N29SR2VM	SMT 6-Pin (Lead Bend), DIN EN/IEC60747-5-5 Option	Tape and Reel (1000 Units)
4N29TVM	DIP 6-Pin, 0.4” Lead Spacing, DIN EN/IEC60747-5-5 Option	Tube (50 Units)

Note:

8. The product orderable part number system listed in this table also applies to the 4N30M, 4N32M, 4N33M, H11B1M, and TIL113M devices.

Marking Information

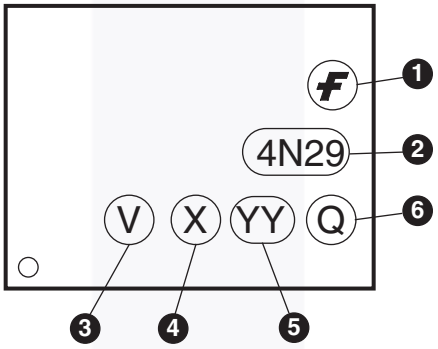

Figure 15. Top Mark

Table 1. Top Mark Definitions

1	Fairchild Logo
2	Device Number
3	DIN EN/IEC60747-5-5 Option (only appears on component ordered with this option)
4	One-Digit Year Code, e.g., “4”
5	Digit Work Week, Ranging from “01” to “53”
6	Assembly Package Code

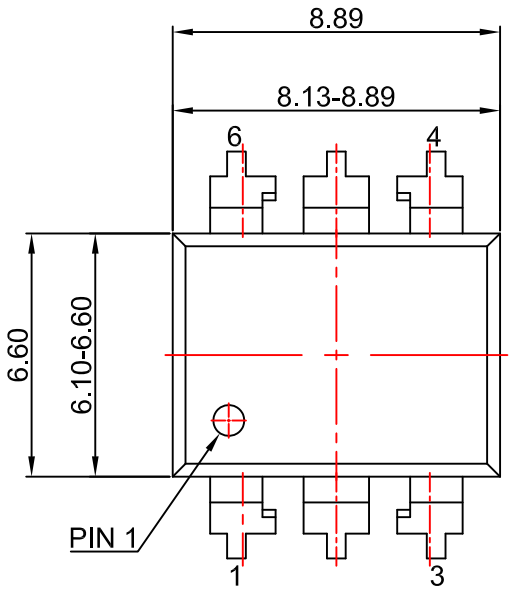

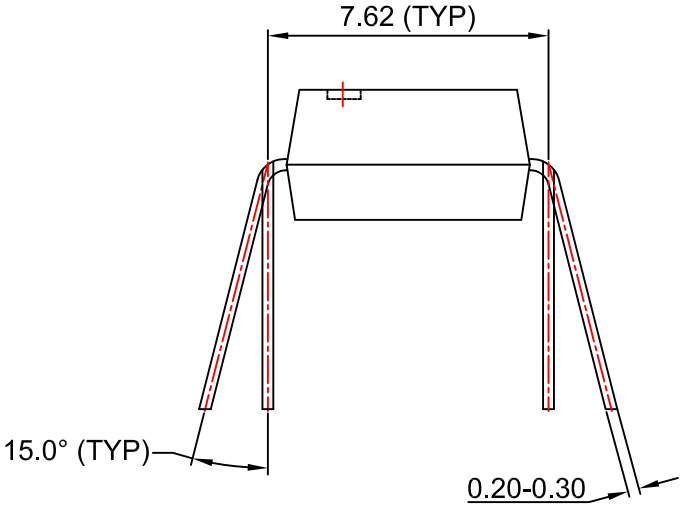

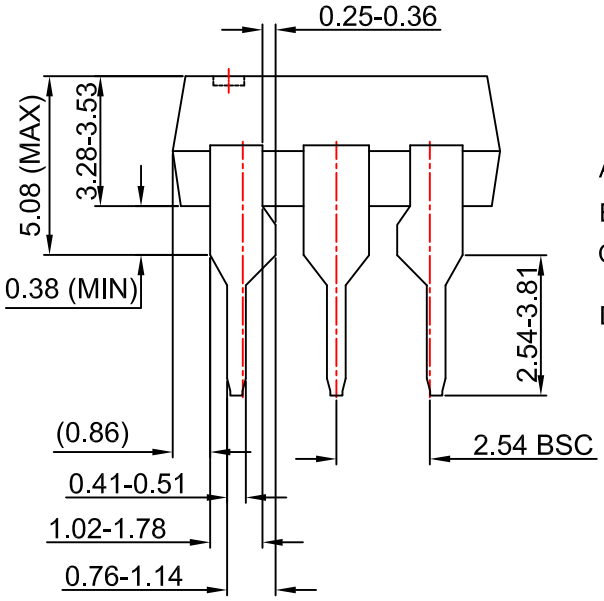

NOTES:

A) NO STANDARD APPLIES TO THIS PACKAGE.

B) ALL DIMENSIONS ARE IN MILLIMETERS.

C) DIMENSIONS ARE EXCLUSIVE OF BURRS, MOLD FLASH, AND TIE BAR EXTRUSION

D) DRAWING FILENAME AND REVSION: MKT-N06BREV4.

FAIRCHILD

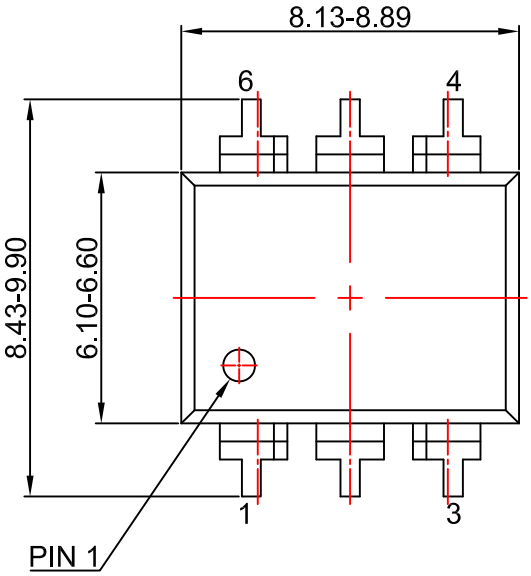

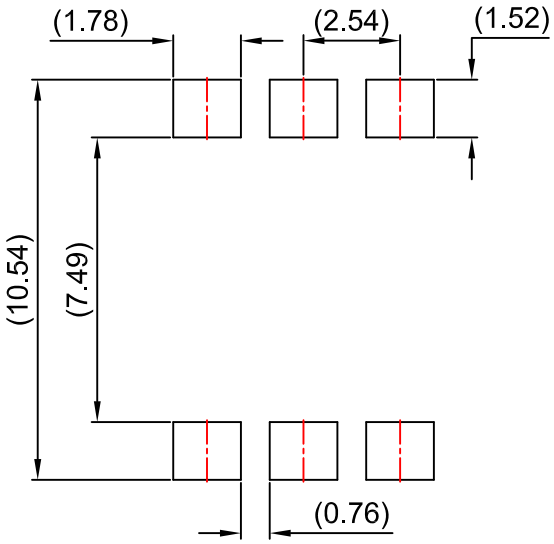

LAND PATTERN RECOMMENDATION

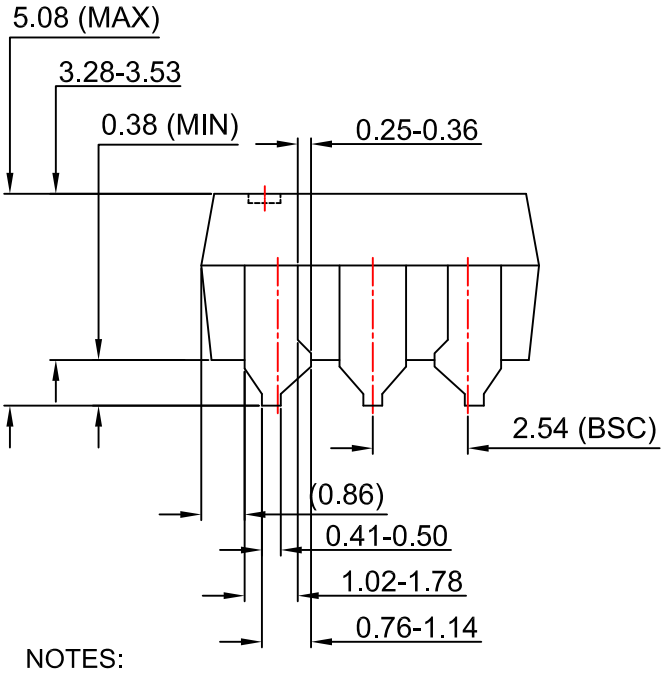

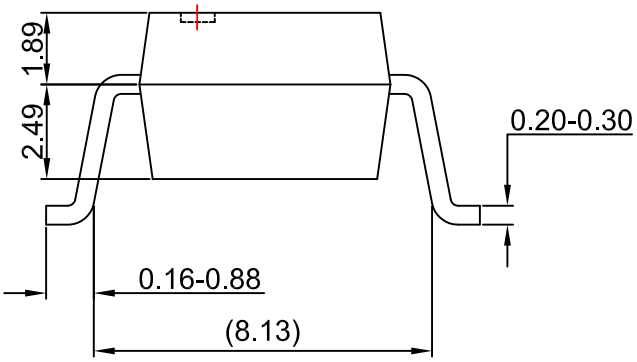

NOTES:

A) NO STANDARD APPLIES TO THIS PACKAGE.

B) ALL DIMENSIONS ARE IN MILLIMETERS.

C) DIMENSIONS ARE EXCLUSIVE OF BURRS,
MOLD FLASH, AND TIE BAR EXTRUSION

D) DRAWING FILENAME AND REVSION : MKT-N06CREV4.

FAIRCHILD

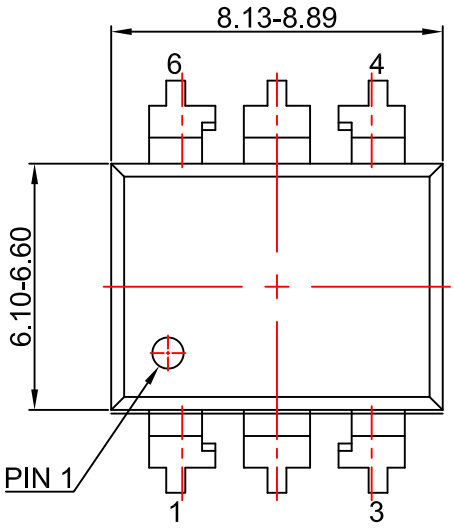

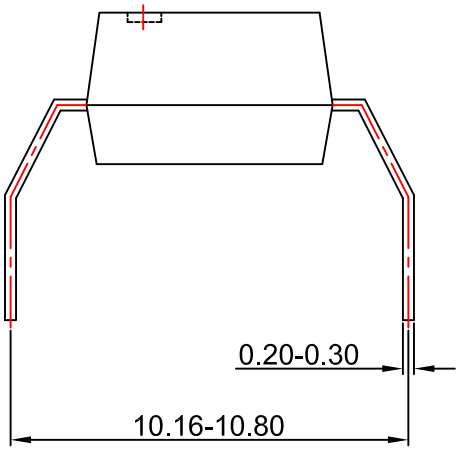

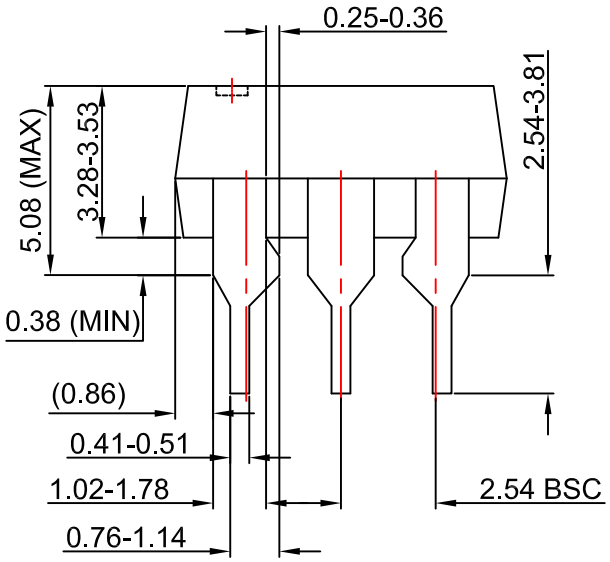

NOTES:

A) NO STANDARD APPLIES TO THIS PACKAGE.

B) ALL DIMENSIONS ARE IN MILLIMETERS.

C) DIMENSIONS ARE EXCLUSIVE OF BURRS, MOLD FLASH, AND TIE BAR EXTRUSION

D) DRAWING FILENAME AND REVSION: MKT-N06Drev4

FAIRCHILD™

ON Semiconductor and ON are trademarks of Semiconductor Components Industries, LLC dba ON Semiconductor or its subsidiaries in the United States and/or other countries. ON Semiconductor owns the rights to a number of patents, trademarks, copyrights, trade secrets, and other intellectual property. A listing of ON Semiconductor's product/patent coverage may be accessed at www.onsemi.com/site/pdf/Patent−Marking.pdf. ON Semiconductor reserves the right to make changes without further notice to any products herein. ON Semiconductor makes no warranty, representation or guarantee regarding the suitability of its products for any particular purpose, nor does ON Semiconductor assume any liability arising out of the application or use of any product or circuit, and specifically disclaims any and all liability, including without limitation special, consequential or incidental damages. Buyer is responsible for its products and applications using ON Semiconductor products, including compliance with all laws, regulations and safety requirements or standards, regardless of any support or applications information provided by ON Semiconductor. "Typical" parameters which may be provided in ON Semiconductor data sheets and/or specifications can and do vary in different applications and actual performance may vary over time. All operating parameters, including "Typicals" must be validated for each customer application by customer's technical experts. ON Semiconductor does not convey any license under its patent rights nor the rights of others. ON Semiconductor products are not designed, intended, or authorized for use as a critical component in life support systems or any FDA Class 3 medical devices or medical devices with a same or similar classification in a foreign jurisdiction or any devices intended for implantation in the human body. Should Buyer purchase or use ON Semiconductor products for any such unintended or unauthorized application, Buyer shall indemnify and hold ON Semiconductor and its officers, employees, subsidiaries, affiliates, and distributors harmless against all claims, costs, damages, and expenses, and reasonable attorney fees arising out of, directly or indirectly, any claim of personal injury or death associated with such unintended or unauthorized use, even if such claim alleges that ON Semiconductor was negligent regarding the design or manufacture of the part. ON Semiconductor is an Equal Opportunity/Affirmative Action Employer. This literature is subject to all applicable copyright laws and is not for resale in any manner.

PUBLICATION ORDERING INFORMATION

LITERATURE FULFILLMENT:
Literature Distribution Center for ON Semiconductor
19521 E. 32nd Pkwy, Aurora, Colorado 80011 USA
Phone: 303−675−2175 or 800−344−3860 Toll Free USA/Canada
Fax: 303−675−2176 or 800−344−3867 Toll Free USA/Canada
Email: orderlit@onsemi.com

N. American Technical Support: 800−282−9855 Toll Free USA/Canada
Europe, Middle East and Africa Technical Support:
Phone: 421 33 790 2910
Japan Customer Focus Center
Phone: 81−3−5817−1050

ON Semiconductor Website: **www.onsemi.com**

Order Literature: http://www.onsemi.com/orderlit

For additional information, please contact your local Sales Representative

Mouser Electronics

Authorized Distributor

Click to View Pricing, Inventory, Delivery & Lifecycle Information:

ON Semiconductor:

4N29M 4N29SR2M 4N29SM

ООО «ЛайфЭлектроникс» “LifeElectronics” LLC

ИНН 7805602321 КПП 780501001 Р/С 40702810122510004610 ФАКБ "АБСОЛЮТ БАНК" (ЗАО) в г.Санкт-Петербурге К/С 30101810900000000703 БИК 044030703

Компания «Life Electronics» занимается поставками электронных компонентов импортного и отечественного производства от производителей и со складов крупных дистрибьюторов Европы, Америки и Азии.

С конца 2013 года компания активно расширяет линейку поставок компонентов по направлению коаксиальный кабель, кварцевые генераторы и конденсаторы (керамические, пленочные, электролитические), за счёт заключения дистрибьюторских договоров

Мы предлагаем:

- *Конкурентоспособные цены и скидки постоянным клиентам.*
- *Специальные условия для постоянных клиентов.*
- *Подбор аналогов.*
- *Поставку компонентов в любых объемах, удовлетворяющих вашим потребностям.*

- *Приемлемые сроки поставки, возможна ускоренная поставка.*
- *Доставку товара в любую точку России и стран СНГ.*
- *Комплексную поставку.*
- *Работу по проектам и поставку образцов.*
- *Формирование склада под заказчика.*

- *Сертификаты соответствия на поставляемую продукцию (по желанию клиента).*
- *Тестирование поставляемой продукции.*
- *Поставку компонентов, требующих военную и космическую приемку.*
- *Входной контроль качества.*
- *Наличие сертификата ISO.*

В составе нашей компании организован Конструкторский отдел, призванный помогать разработчикам, и инженерам.

Конструкторский отдел помогает осуществить:

- *Регистрацию проекта у производителя компонентов.*
- *Техническую поддержку проекта.*
- *Защиту от снятия компонента с производства.*
- *Оценку стоимости проекта по компонентам.*
- *Изготовление тестовой платы монтаж и пусконаладочные работы.*

Тел: +7 (812) 336 43 04 (многоканальный)
Email: org@lifeelectronics.ru

www.lifeelectronics.ru