THIS DRAWING IS UNPUBLISHED. RELEASED FOR PUBLICATION 20
© COPYRIGHT 20 BY - ALL RIGHTS RESERVED.

LOC	DIST
GP	00

REVISIONS

P	LTR	DESCRIPTION	DATE	DWN	APVD
	A	RELEASED PER ECO-12-013192	08OCT2012	BMM	MRS
	A1	RELEASED PER ECO-14-008488	06JUNE2014	PP	SH

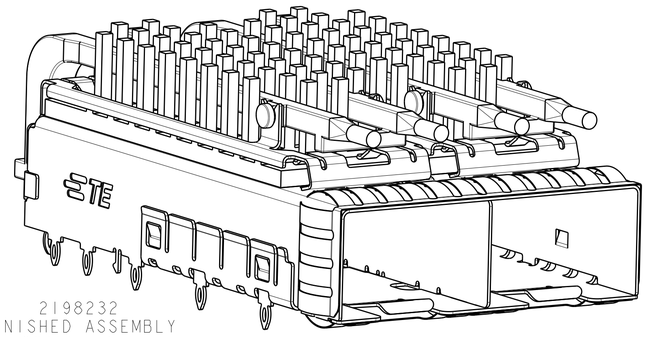

2198232
FINISHED ASSEMBLY
SCALE 4:1

1. MATERIAL:
   CAGE ASSEMBLY: 0.25mm THICK NICKEL SILVER ALLOY
   EMI SPRINGS: COPPER ALLOY
   HEAT SINK: ALUMINUM
   HEAT SINK/LIGHTPIPE CLIP: STAINLESS STEEL.
   LIGHTPIPE: POLYCARBONATE, CLEAR

2. FINISH:
   SPRINGS: MINIMUM OF 0.8um TIN PLATE OVER MINIMUM OF 0.8um NICKEL UNDERPLATE. NON-PLATED EDGES PERMISSIBLE.
   HEAT SINK: ELECTROLESS NICKEL
   HEAT SINK CLIP: PASSIVATE.

3. DATUM AND BASIC DIMENSIONS ESTABLISHED BY CUSTOMER.

5. PADS AND VIAS CHASSIS GROUND.

5. MATES WITH SFP MSA COMPLIANT RECIEVERS.

6. INTERPRETATION OF DATUM REFERENCE FRAME IN ACCORDANCE WITH SECT 4.4.1.1 OR ASME Y14.5M-1994.

7. MINIMUM PC BOARD THICKNESS:
   SINGLE SIDED: 1.5mm
   DOUBLE SIDED: 2.25mm

8. HOLE PATTERN REPEATS FOR EACH PORT, SPACING BETWEEN PORTS IS 14.25mm.

9. REFERENCE APPLICATION SPEC. 114-13120, HOLE A, FOR RECOMMENDED DRILL HOLE DIAMETER AND PLATING THICKNESS.

10. REFERENCE APPLICATION SPEC. 114-13120, HOLE B, FOR RECOMMENDED DRILL HOLE DIAMETER AND PLATING THICKNESS.

11. CERTAIN MATING TRANCEIVERS MAY REQUIRE ADDITIONAL PCB THICKNESS THAT WOULD NEED TO BE DETERMINED BY THE CUSTOMER.

12. PRODUCT COMPLIES WITH SPECIFICATION SFF-8433 IMPROVED PLUGGABLE FORM FACTOR FOR SFP+ GANGED CAGES.

13. DIMENSION APPLIES PRIOR TO INSERTION OF SFP MODULE.

14. HEATSINK, HEATSINK CLIP, AND LIGHTPIPE SHIPPED UNASSEMBLED TO CAGE ASSEMBLY. CAGE ASSEMBLY TO BE PRESSED INTO PCB PRIOR TO ATTACHING HEATSINK, HEATSINK CLIP, AND LIGHTPIPE TO THE CAGE ASSEMBLY.

15. PACKAGED AS A COMPLETE ASSEMBLY.

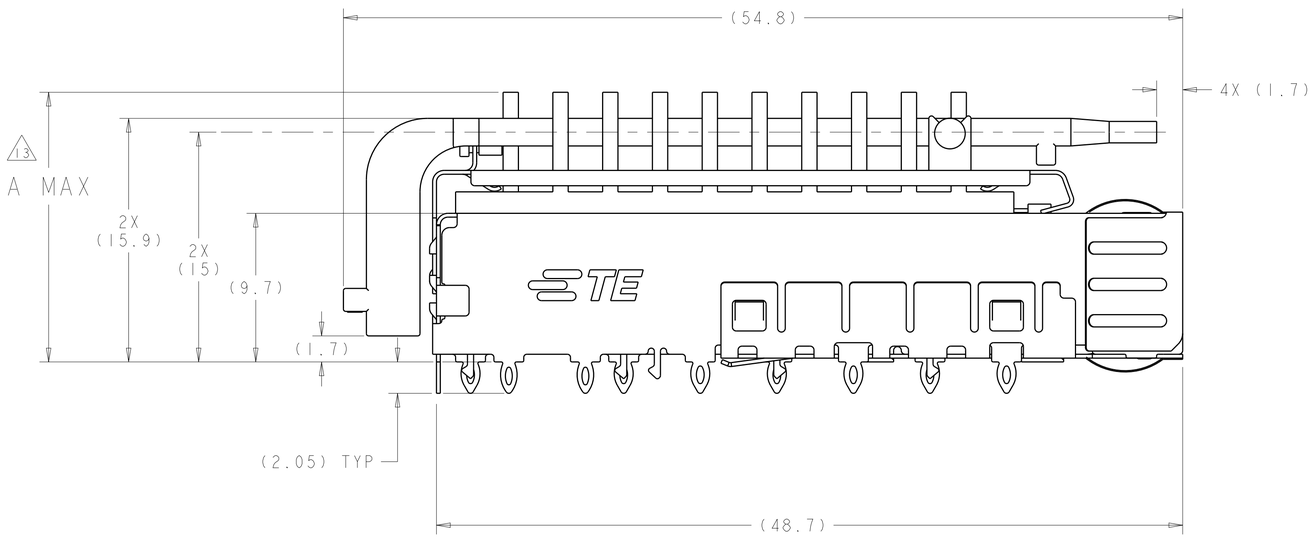

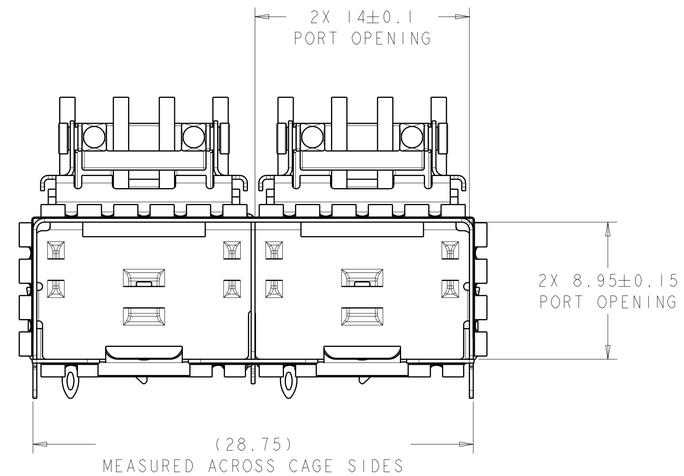

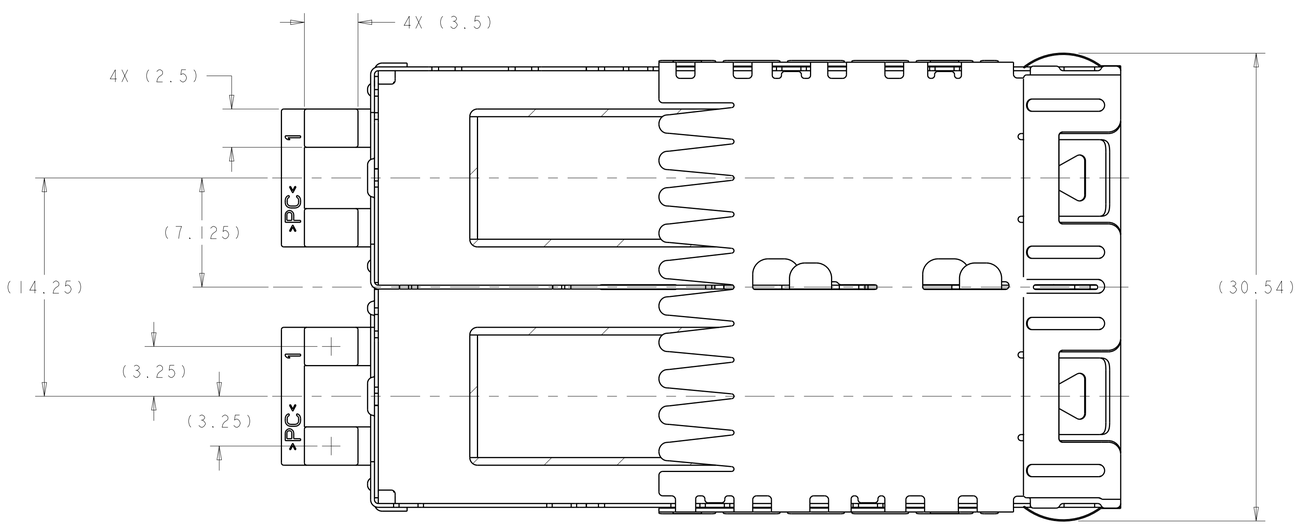

	A MAX	DESCRIPTION	PART NUMBER
15	22.5	NETWORKING, TALL	2198232-4
15	18.1	NETWORKING, SHORT	2198232-3
14	15.5	SAN	2198232-2
14	13.2	PCI	2198232-1

THIS DRAWING IS A CONTROLLED DOCUMENT.

DIMENSIONS: mm

TOLERANCES UNLESS OTHERWISE SPECIFIED:
0 PLC ±0.13
1 PLC ±0.1
2 PLC ±0.08
3 PLC ±.05
4 PLC ±.05
ANGLES ±1

MATERIAL 1
FINISH 2

DWN B. MATTHEWS 01NOV2011
CHK M. SCHMITT 01NOV2011
APVD M. SCHMITT 01NOV2011
PRODUCT SPEC 108-2364
APPLICATION SPEC 114-13120
WEIGHT -

TE Connectivity

NAME SFP+ ENHANCED 1X2 CAGE ASSEMBLY, PRESS-FIT, EXTERNAL EMI SPRINGS WITH HEATSINK AND LIGHTPIPE

SIZE	CAGE CODE	DRAWING NO	RESTRICTED TO
A1	00779	C-2198232	-

Customer Drawing | SCALE 5:1 | SHEET 1 OF 4 | REV A1

4805 (3/11)

THIS DRAWING IS UNPUBLISHED. RELEASED FOR PUBLICATION 20
© COPYRIGHT 20 BY - ALL RIGHTS RESERVED.

LOC	DIST
GP	00

REVISIONS

P	LTR	DESCRIPTION	DATE	DWN	APVD
	-	SEE SHEET 1	-	-	-

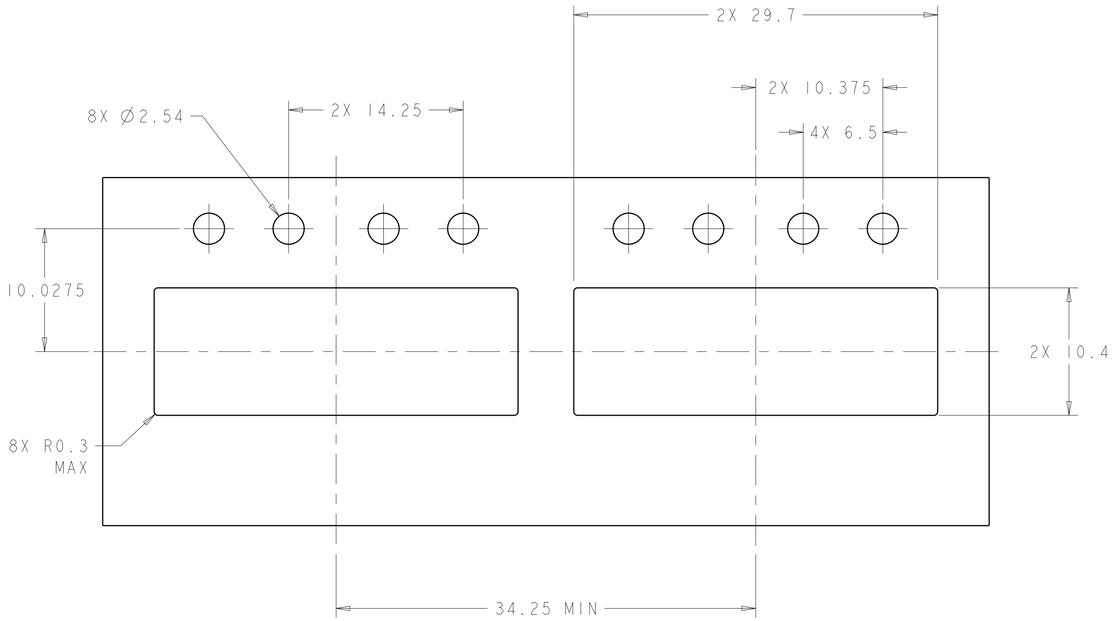

RECOMMENDED BEZEL CUT-OUT
SINGLE SIDED APPLICATIONS
SCALE 4:1

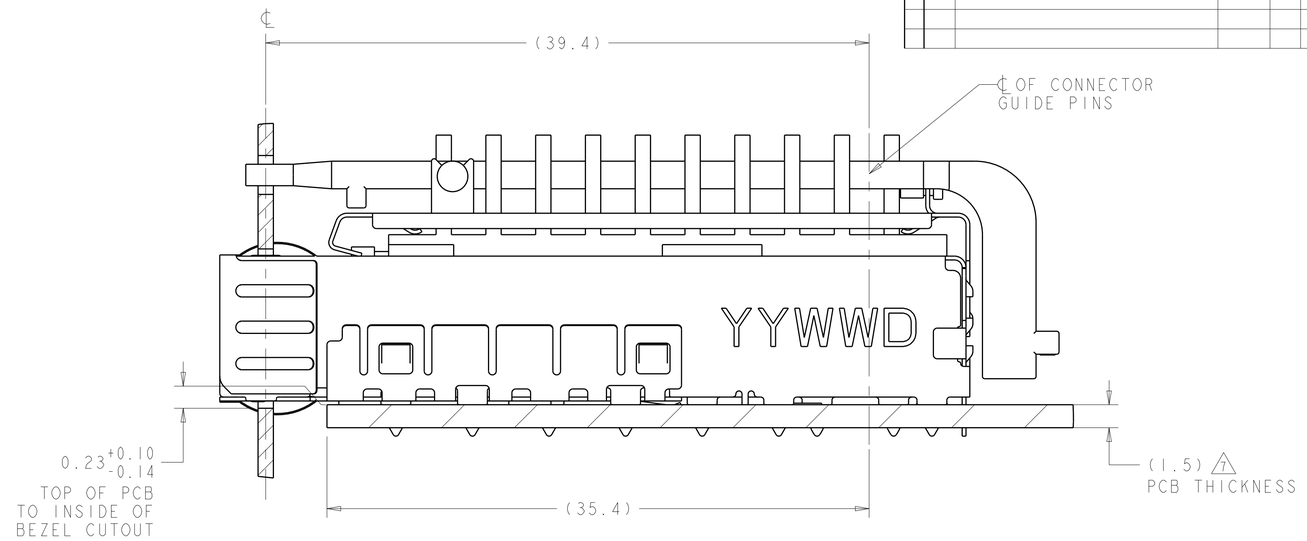

2198232
MOUNTED ON PC BOARD
SHOWN THRU RECOMMENDED BEZEL

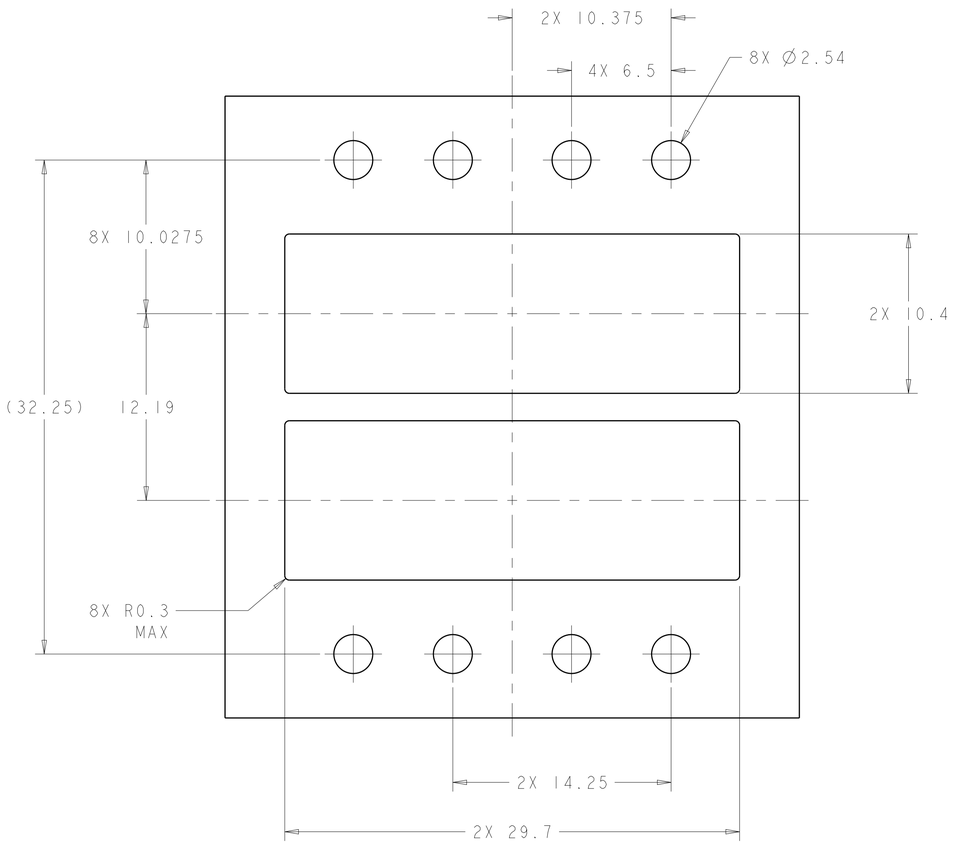

RECOMMENDED BEZEL CUT-OUT
BELLY TO BELLY APPLICATIONS

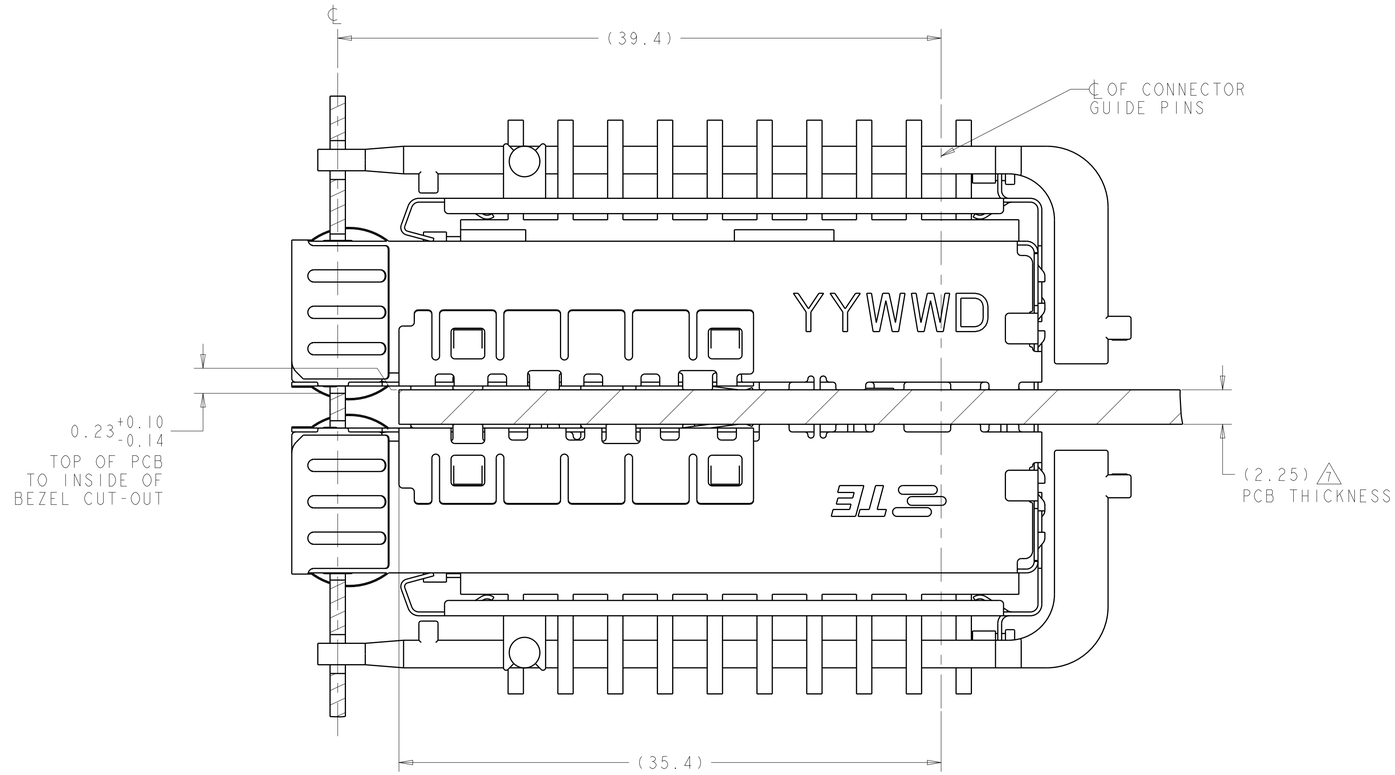

2198232
MOUNTED BELLY TO BELLY ON PC BOARD
SHOWN THRU RECOMMENDED BEZEL

THIS DRAWING IS A CONTROLLED DOCUMENT.

DIMENSIONS: mm

TOLERANCES UNLESS OTHERWISE SPECIFIED:
0 PLC ±0.13
1 PLC ±0.1
2 PLC ±0.08
3 PLC ±.05
4 PLC ±.05
ANGLES ±1

MATERIAL
FINISH

DWN B. MATTHEWS 01NOV2011
CHK M. SCHMITT 01NOV2011
APVD M. SCHMITT 01NOV2011

PRODUCT SPEC 108-2364
APPLICATION SPEC 114-13120
WEIGHT -

TE Connectivity

NAME SFP+ ENHANCED 1X2 CAGE ASSEMBLY, PRESS-FIT, EXTERNAL EMI SPRINGS WITH HEATSINK AND LIGHTPIPE

SIZE	CAGE CODE	DRAWING NO	RESTRICTED TO
A1	00779	C-2198232	-

Customer Drawing

SCALE	SHEET	OF	REV
5:1	2	4	A1

4805 (3/11)

THIS DRAWING IS UNPUBLISHED. RELEASED FOR PUBLICATION 20
© COPYRIGHT 20 BY - ALL RIGHTS RESERVED.

LOC	DIST
GP	00

REVISIONS

P	LTR	DESCRIPTION	DATE	DWN	APVD
	-	SEE SHEET 1	-	-	-

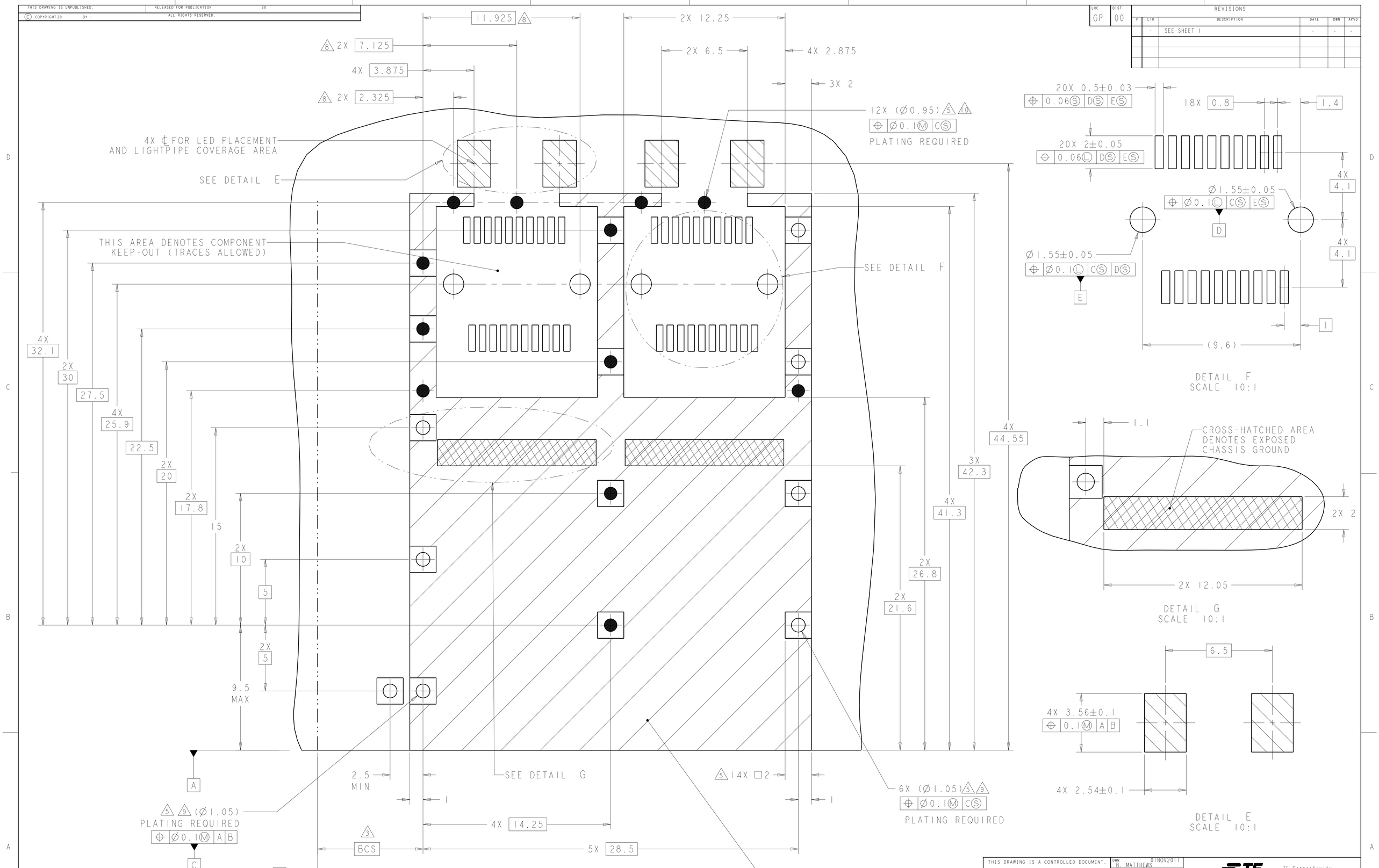

THIS DRAWING IS A CONTROLLED DOCUMENT.

DIMENSIONS: mm

TOLERANCES UNLESS OTHERWISE SPECIFIED:
0 PLC ±0.13
1 PLC ±0.1
2 PLC ±0.08
3 PLC ±.05
4 PLC ±.05
ANGLES ±1

MATERIAL

FINISH

DWN	B. MATTHEWS	01NOV2011
CHK	M. SCHMITT	01NOV2011
APVD	M. SCHMITT	01NOV2011

PRODUCT SPEC 108-2364
APPLICATION SPEC 114-13120
WEIGHT -

TE Connectivity

NAME SFP+ ENHANCED 1X2 CAGE ASSEMBLY, PRESS-FIT, EXTERNAL EMI SPRINGS WITH HEATSINK AND LIGHTPIPE

SIZE	CAGE CODE	DRAWING NO	RESTRICTED TO
A1	00779	C-2198232	-

Customer Drawing

SCALE	SHEET	OF	REV
5:1	3	4	A1

THIS DRAWING IS UNPUBLISHED. RELEASED FOR PUBLICATION 20
© COPYRIGHT 20 BY - ALL RIGHTS RESERVED.

LOC	DIST
GP	00

REVISIONS

P	LTR	DESCRIPTION	DATE	DWN	APVD
	-	SEE SHEET 1	-	-	-

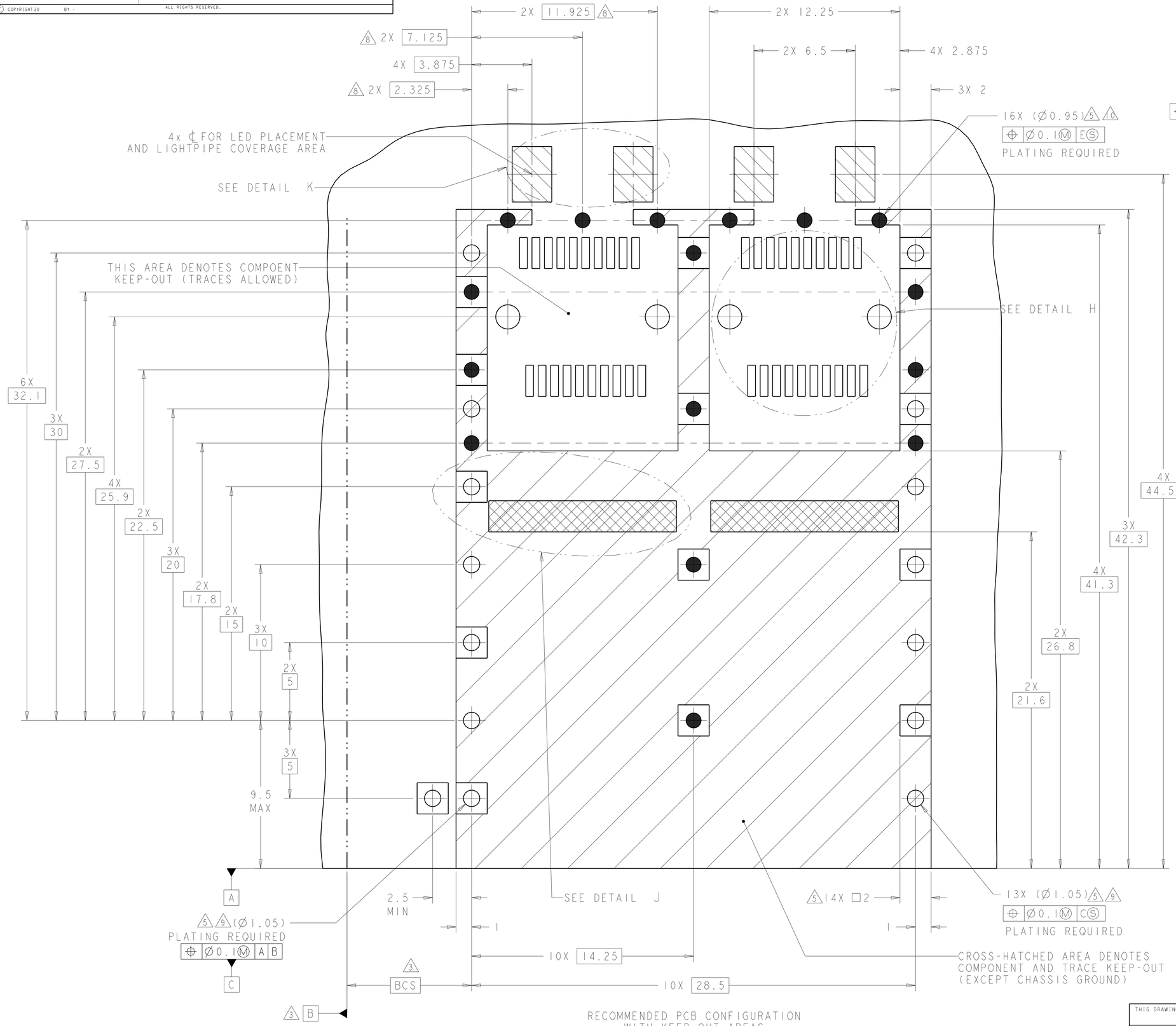

RECOMMENDED PCB CONFIGURATION
WITH KEEP-OUT AREAS
BELLY TO BELLY APPLICATIONS
SCALE 8:1 [7]

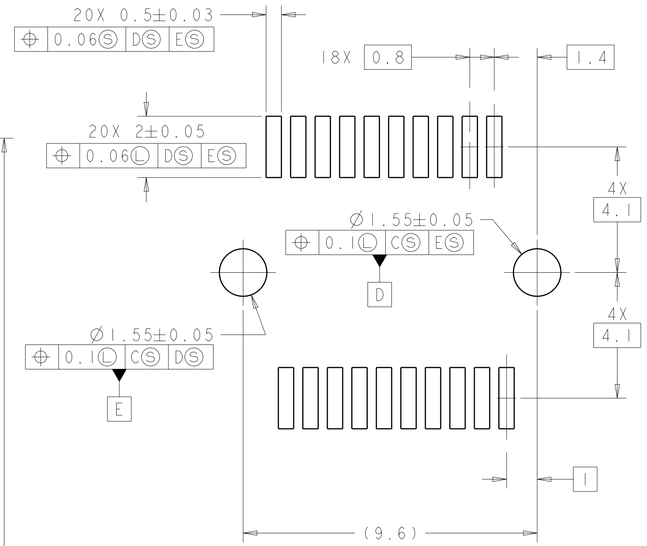

DETAIL H
SCALE 10:1

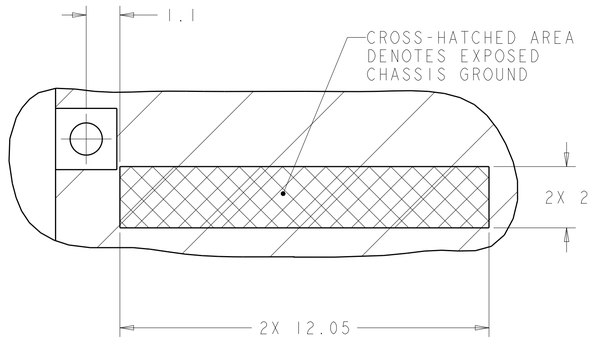

DETAIL J
SCALE 10:1

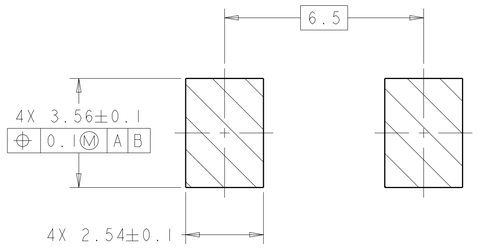

DETAIL K
SCALE 10:1

THIS DRAWING IS A CONTROLLED DOCUMENT.

DIMENSIONS: mm

TOLERANCES UNLESS OTHERWISE SPECIFIED:
0 PLC ±0.13
1 PLC ±0.1
2 PLC ±0.08
3 PLC ±.05
4 PLC ±.05
ANGLES ±1

MATERIAL
FINISH

DWN B. MATTHEWS 01NOV2011
CHK M. SCHMITT 01NOV2011
APVD M. SCHMITT 01NOV2011
PRODUCT SPEC 108-2364
APPLICATION SPEC 114-13120
WEIGHT -

TE Connectivity

NAME SFP+ ENHANCED 1X2 CAGE ASSEMBLY, PRESS-FIT, EXTERNAL EMI SPRINGS WITH HEATSINK AND LIGHTPIPE

SIZE	CAGE CODE	DRAWING NO	RESTRICTED TO
A1	00779	C-2198232	-

Customer Drawing | SCALE 5:1 | SHEET 4 OF 4 | REV A1

4805 (3/11)

ООО «ЛайфЭлектроникс» “LifeElectronics” LLC

ИНН 7805602321 КПП 780501001 Р/С 40702810122510004610 ФАКБ "АБСОЛЮТ БАНК" (ЗАО) в г.Санкт-Петербурге К/С 30101810900000000703 БИК 044030703

Компания «Life Electronics» занимается поставками электронных компонентов импортного и отечественного производства от производителей и со складов крупных дистрибьюторов Европы, Америки и Азии.

С конца 2013 года компания активно расширяет линейку поставок компонентов по направлению коаксиальный кабель, кварцевые генераторы и конденсаторы (керамические, пленочные, электролитические), за счёт заключения дистрибьюторских договоров

Мы предлагаем:

- *Конкурентоспособные цены и скидки постоянным клиентам.*
- *Специальные условия для постоянных клиентов.*
- *Подбор аналогов.*
- *Поставку компонентов в любых объемах, удовлетворяющих вашим потребностям.*

- *Приемлемые сроки поставки, возможна ускоренная поставка.*
- *Доставку товара в любую точку России и стран СНГ.*
- *Комплексную поставку.*
- *Работу по проектам и поставку образцов.*
- *Формирование склада под заказчика.*

- *Сертификаты соответствия на поставляемую продукцию (по желанию клиента).*
- *Тестирование поставляемой продукции.*
- *Поставку компонентов, требующих военную и космическую приемку.*
- *Входной контроль качества.*
- *Наличие сертификата ISO.*

В составе нашей компании организован Конструкторский отдел, призванный помогать разработчикам, и инженерам.

Конструкторский отдел помогает осуществить:

- *Регистрацию проекта у производителя компонентов.*
- *Техническую поддержку проекта.*
- *Защиту от снятия компонента с производства.*
- *Оценку стоимости проекта по компонентам.*
- *Изготовление тестовой платы монтаж и пусконаладочные работы.*

Тел: +7 (812) 336 43 04 (многоканальный)
Email: org@lifeelectronics.ru

www.lifeelectronics.ru