List of "HFW__R-1/2STE1HLF" customer document

DOCUMENT NO.	LIST
10089213(sheet1)	DOCUMENT LIST
10089213(sheet2)	CAT. NO. TABLE FOR 1mm SPACING SMT CONNECTOR (HFW__R-1/2ST_HLF)
10089213(sheet3)	1mm SPACING SURFACE MOUNT FPC/FFC CONNECTOR (HFW__R-1ST_HLF)
10089213(sheet4)	1mm SPACING SURFACE MOUNT FPC/FFC CONNECTOR (HFW__R-2ST_HLF)
10089213(sheet5)	CAT. NO. TABLE FOR PLASTIC TAPE PACKAGED 1mm SPACING SMT CONNECTOR (HFW__R-1/2STE1HLF)
10089213(sheet6)	1mm SPACING SMT CONNECTOR (HFW__R-1STE1HLF)
10089213(sheet7)	1mm SPACING SMT CONNECTOR (HFW__R-2STE1HLF)
10089213(sheet8)	RECOMMENDED CABLE (FPC) (HFW__R-1/2__)
10089213(sheet9)	RECOMMENDED CABLE (FFC) (HFW__R-1/2__)
GS-12-563	PRODUCT SPEC.
BJM-HFWR101	HANDLING PROCEDURES

© 2016 AFCI

ltr	ecn no	dr	date
A	S08-0199	DGOH	08/06/26
B	ELX-J-32905	S.W	2019-3-13

mat'l. code: –

surface: ISO 1302

tolerance: ISO 406 ISO 1101

tolerances unless otherwise specified: angles / linear

projection

MM

scale N/A

dr	S.WATANABE	2019-3-13
engr	S.WATANABE	2019-3-13
chr	S-H.THIO	2019-3-13
appd	Y.KAMEDA	2019-3-13

product family: 58NF

title: 1mm SPACING FPC/FFC CONNECTOR DOCUMENT LIST (Cat. No. : HFW__R-1/2STE1HLF)

dwg no: 10089213 sheet 1 of 9

size: A4

type: Product Customer Drawing

sheet index	revision	B	B	B	B	B	B	B	B	B
	sheet	1	2	3	4	5	6	7	8	9

form: A4-2016-02-24

CAT. NO. & DIMENSIONS

(NOTE3)	NO. OF CONTACTS (n)	CAT. NO.	DIMENSIONS (NOTE2)		
			A ± 0.2	B ± 0.2	C ± 0.1
	4	HFW4R-1/2ST__HLF	6.6	3	5.14
	5	HFW5R-1/2ST__HLF	7.6	4	6.14
	6	HFW6R-1/2ST__HLF	8.6	5	7.14
	7	HFW7R-1/2ST__HLF	9.6	6	8.14
	8	HFW8R-1/2ST__HLF	10.6	7	9.14
	9	HFW9R-1/2ST__HLF	11.6	8	10.14
	10	HFW10R-1/2ST__HLF	12.6	9	11.14
	11	HFW11R-1/2ST__HLF	13.6	10	12.14
	12	HFW12R-1/2ST__HLF	14.6	11	13.14
	13	HFW13R-1/2ST__HLF	15.6	12	14.14
	14	HFW14R-1/2ST__HLF	16.6	13	15.14
	15	HFW15R-1/2ST__HLF	17.6	14	16.14
	16	HFW16R-1/2ST__HLF	18.6	15	17.14
	17	HFW17R-1/2ST__HLF	19.6	16	18.14
	18	HFW18R-1/2ST__HLF	20.6	17	19.14
	19	HFW19R-1/2ST__HLF	21.6	18	20.14
	20	HFW20R-1/2ST__HLF	22.6	19	21.14
	21	HFW21R-1/2ST__HLF	23.6	20	22.14
	22	HFW22R-1/2ST__HLF	24.6	21	23.14
	23	HFW23R-1/2ST__HLF	25.6	22	24.14
	24	HFW24R-1/2ST__HLF	26.6	23	25.14
	25	HFW25R-1/2ST__HLF	27.6	24	26.14
	26	HFW26R-1/2ST__HLF	28.6	25	27.14
	27	HFW27R-1/2ST__HLF	29.6	26	28.14
*	28	HFW28R-1/2ST__HLF	30.6	27	29.14
*	29	HFW29R-1/2ST__HLF	31.6	28	30.14
	30	HFW30R-1/2ST__HLF	32.6	29	31.14

CAT. NO. HFW (n) R – 1 ST __ HLF

- HFW — SERIES
- (n) — NO. OF CONTACTS
- R — RIGHT ANGLE TYPE
- 1 — FOR FPC/FFC, CONTACT DIRECTION
  1. LOWER CONTACT TYPE
  2. UPPER CONTACT TYPE
- ST — FOR AUTOMATIC MOUNTING (SMT)
- __ — PACKAGE STYLE
- HLF — HALOGEN and LEAD FREE

NOTES

1. THIS PRODUCT IS THE CONNECTOR DESIGNED TO TERMINATE FPC/FFC AND COPES WITH AUTOMATIC MOUNTING (SMT).
2. SEE PART DRAWINGS FOR DIMENSIONS A~C.
3. PLEASE CONSULT US IN CASE OF USING PARTS WITH * MARK.

© 2016 AFCI

mat'l. code				surface ISO 1302	tolerance ISO 406 ISO 1101	projection	product family 58NF
ltr	ecn no	dr	date	tolerances unless otherwise specified			title CAT. NO. TABLE FOR 1mm SPACING SMT CONNECTOR (Cat.No. HFW__R-1/2ST__HLF)
B				angles	linear	MM	
						scale N/A	
				dr	S.WATANABE	2019-3-13	dwg no 10089213 sheet 2 of 9 size A4
				engr	S.WATANABE	2019-3-13	
				chr	S-H.THIO	2019-3-13	
				appd	Y.KAMEDA	2019-3-13	type Product Customer Drawing
sheet index	revision sheet						

form: A4-2016-02-24

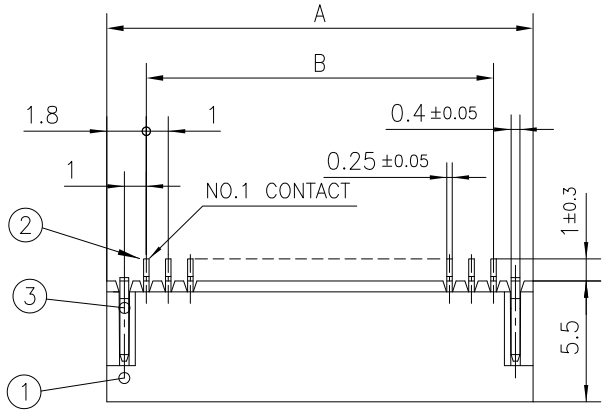

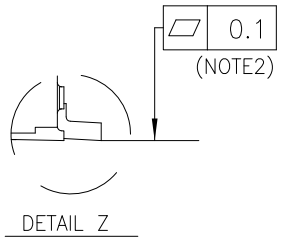

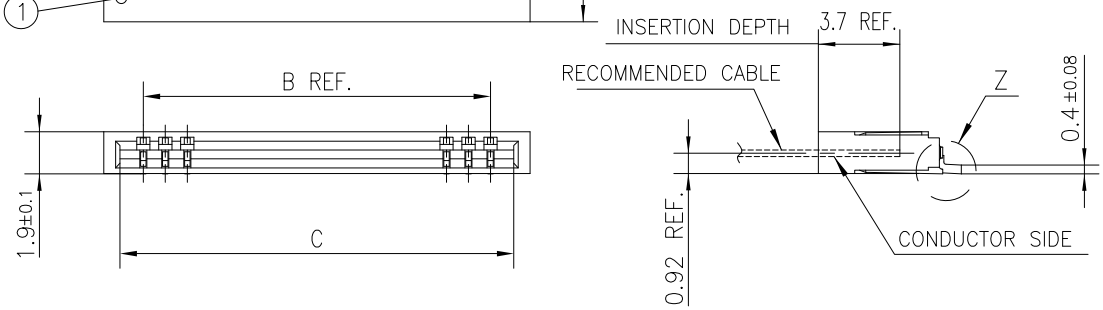

PT. NO.	PARTS NAME	MATERIAL	Q'TY	NOTE
1	HOUSING	PA6T RESIN GLASS REINFORCED (UL94V-0)	1	COLOR : BLACK (HALOGEN FREE)
2	CONTACT	PHOSPHOR BRONZE	n	PLATING : TIN (LEAD FREE)
3	MOUNTING PLATE		2	

n : NO. OF CONTACTS

RECOMMENDED PC BOARD LAYOUT
(COMPONENT SIDE)

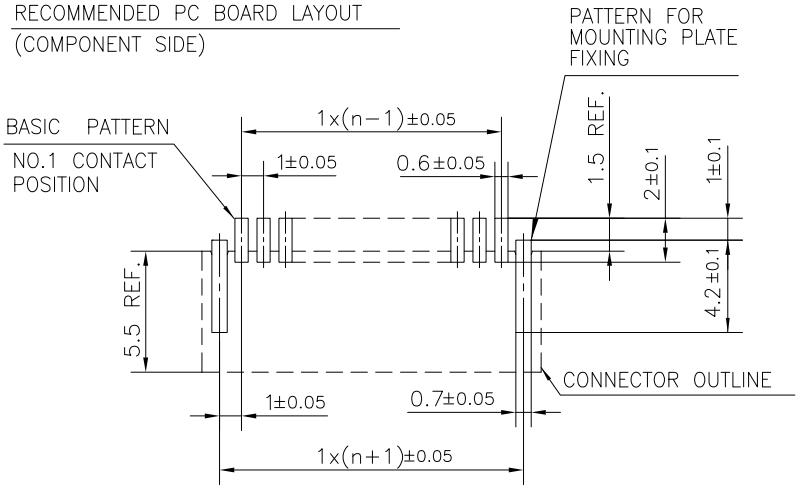

NOTES

1. THIS PRODUCT IS THE CONNECTOR DESIGNED TO TERMINATE FPC/FFC AND COPES WITH AUTOMATIC MOUNTING (SMT).
2. FLATNESS OF CONTACT TERMINAL FOR HOUSING MUST BE WITHIN TOLERANCE IN Z PORTION DETAILED DRAWING.
3. THIS PRODUCT IS LOWER CONTACT TYPE CONNECTOR.
4. THIS PRODUCT MEETS EUROPEAN UNION DIRECTIVES AND OTHER COUNTRY REGULATIONS AS DESCRIBED IN GS-22-008
5. THE HOUSING WILL WITHSTAND EXPOSURE TO 260°C PEAK TEMPERATURE FOR 10 SECONDS IN A REFLOW SOLDERING OVEN.

mat'l. code —				surface ISO 1302	tolerance ISO 406 ISO 1101	projection	product family 58NF
ltr	ecn no	dr	date	tolerances unless otherwise specified			title 1mm SPACING SURFACE MOUNT FPC/FFC CONNECTOR (Cat.No. HFW__R-1ST__HLF)
B				angles	linear ±0.2	MM	
						scale N/A	
				dr	S.WATANABE 2019-3-13	Amphenol FCi	dwg no 10089213 sheet 3 of 9 size A4
				engr	S.WATANABE 2019-3-13		
				chr	S-H.THIO 2019-3-13		
				appd	Y.KAMEDA 2019-3-13		type Product Customer Drawing
sheet index	revision sheet						

© 2016 AFCI

form: A4-2016-02-24

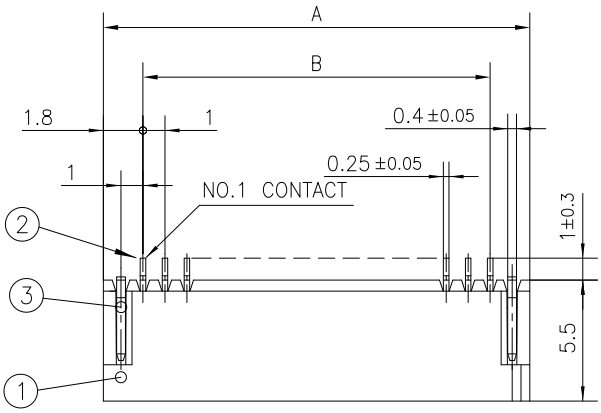

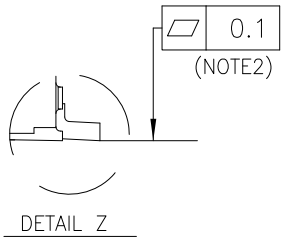

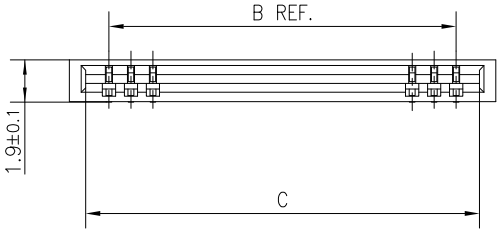

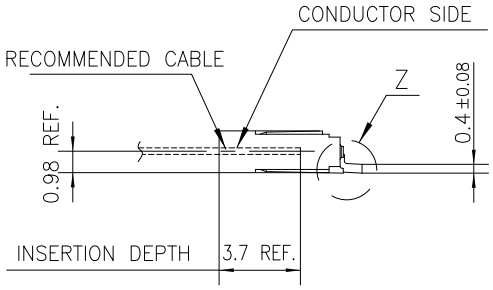

PT. NO.	PARTS NAME	MATERIAL	Q'TY	NOTE
1	HOUSING	PA6T RESIN GLASS REINFORCED (UL94V-0)	1	COLOR : BLACK (HALOGEN FREE)
2	CONTACT	PHOSPHOR BRONZE	n	PLATING : TIN (LEAD FREE)
3	MOUNTING PLATE		2	

n : NO. OF CONTACTS

RECOMMENDED PC BOARD LAYOUT
(COMPONENT SIDE)

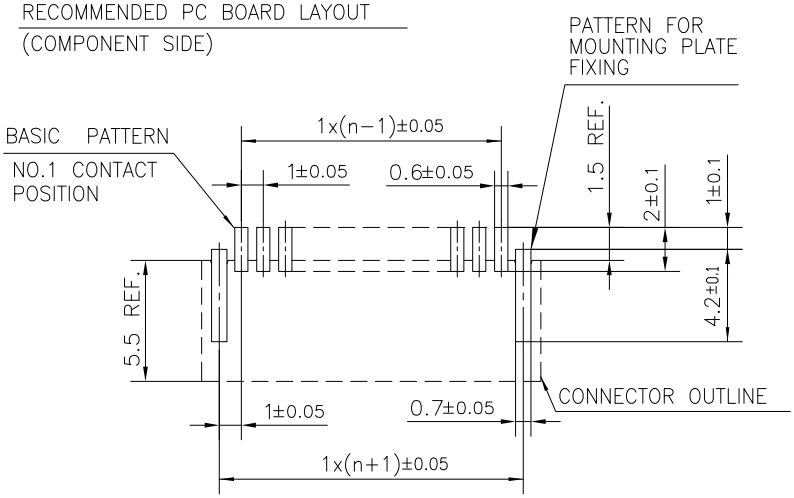

NOTES

1. THIS PRODUCT IS THE CONNECTOR DESIGNED TO TERMINATE FPC/FFC AND COPES WITH AUTOMATIC MOUNTING (SMT).
2. FLATNESS OF CONTACT TERMINAL FOR HOUSING MUST BE WITHIN TOLERANCE IN Z PORTION DETAILED DRAWING.
3. THIS PRODUCT IS UPPER CONTACT TYPE CONNECTOR.
4. THIS PRODUCT MEETS EUROPEAN UNION DIRECTIVES AND OTHER COUNTRY REGULATIONS AS DESCRIBED IN GS-22-008
5. THE HOUSING WILL WITHSTAND EXPOSURE TO 260°C PEAK TEMPERATURE FOR 10 SECONDS IN A REFLOW SOLDERING OVEN.

© 2016 AFCI

mat'l. code —				surface ISO 1302	tolerance ISO 406 ISO 1101	projection	product family 58NF
ltr	ecn no	dr	date	tolerances unless otherwise specified			title 1mm SPACING SURFACE MOUNT FPC/FFC CONNECTOR (Cat.No. HFW__R-2ST__HLF)
B				angles	linear ±0.2	MM	
						scale N/A	
				dr	S.WATANABE 2019-3-13	Amphenol FCi	dwg no 10089213 sheet 4 of 9 size A4
				engr	S.WATANABE 2019-3-13		
				chr	S-H.THIO 2019-3-13		
				appd	Y.KAMEDA 2019-3-13		type Product Customer Drawing
sheet index	revision sheet						

form: A4-2016-02-24

CAT. NO. & DIMENSIONS

(NOTE4)	NO. OF CONTACTS (n)	CAT. NO. (NOTE2)	DIMENSIONS (NOTE3)		
			E ± 5	F ± 0.3	G ± 0.1
	4	HFW4R-1/2STE1HLF	28.4	24	—
	5	HFW5R-1/2STE1HLF	28.4	24	—
	6	HFW6R-1/2STE1HLF	28.4	24	—
	7	HFW7R-1/2STE1HLF	28.4	24	—
	8	HFW8R-1/2STE1HLF	28.4	24	—
	9	HFW9R-1/2STE1HLF	28.4	24	—
	10	HFW10R-1/2STE1HLF	28.4	24	—
	11	HFW11R-1/2STE1HLF	28.4	24	—
	12	HFW12R-1/2STE1HLF	28.4	24	—
	13	HFW13R-1/2STE1HLF	28.4	24	—
	14	HFW14R-1/2STE1HLF	28.4	24	—
	15	HFW15R-1/2STE1HLF	36.4	32	28.4
	16	HFW16R-1/2STE1HLF	36.4	32	28.4
	17	HFW17R-1/2STE1HLF	36.4	32	28.4
	18	HFW18R-1/2STE1HLF	36.4	32	28.4
	19	HFW19R-1/2STE1HLF	48.4	44	40.4
	20	HFW20R-1/2STE1HLF	48.4	44	40.4
	21	HFW21R-1/2STE1HLF	48.4	44	40.4
	22	HFW22R-1/2STE1HLF	48.4	44	40.4
	23	HFW23R-1/2STE1HLF	48.4	44	40.4
	24	HFW24R-1/2STE1HLF	48.4	44	40.4
	25	HFW25R-1/2STE1HLF	48.4	44	40.4
	26	HFW26R-1/2STE1HLF	48.4	44	40.4
	27	HFW27R-1/2STE1HLF	48.4	44	40.4
*	28	HFW28R-1/2STE1HLF	48.4	44	40.4
*	29	HFW29R-1/2STE1HLF	48.4	44	40.4
	30	HFW30R-1/2STE1HLF	60.4	56	52.4

CAT. NO. HFW (n) R – 1 ST E1 HLF

- HFW — SERIES
- (n) — NO. OF CONTACTS
- R — RIGHT ANGLE TYPE
- 1 — FOR FPC/FFC, CONTACT DIRECTION
  1. LOWER CONTACT TYPE
  2. UPPER CONTACT TYPE
- ST — FOR AUTOMATIC MOUNTING (SMT)
- E1 — TAPE PACKAGING
- HLF — HALOGEN and LEAD FREE

NOTES

1. THIS PRODUCT IS THE CONNECTOR DESIGNED TO TERMINATE FPC/FFC AND COPES WITH AUTOMATIC MOUNTING (SMT).
2. THIS CATALOG NO. INDICATES PLASTIC TAPE PACKAGED CONNECTOR.
3. SEE PART DRAWINGS FOR DIMENSIONS E~G.
4. PLEASE CONSULT US IN CASE OF USING PARTS WITH * MARK.

© 2016 AFCI

mat'l. code	–	surface ISO 1302	tolerance ISO 406 ISO 1101
ltr	ecn no	dr	date
B			
tolerances unless otherwise specified	angles	linear	
projection	MM	scale N/A	
product family	58NF		
title	CAT. NO. TABLE FOR PLASTIC TAPE PACKAGED 1mm SPACING SMT CONN. (Cat.No. HFW__R-1/2STE1HLF)		
dr	S.WATANABE	2019-3-13	
engr	S.WATANABE	2019-3-13	
chr	S-H.THIO	2019-3-13	
appd	Y.KAMEDA	2019-3-13	
dwg no	10089213	sheet 5 of 9	size A4
type	Product Customer Drawing		
sheet index	revision sheet		

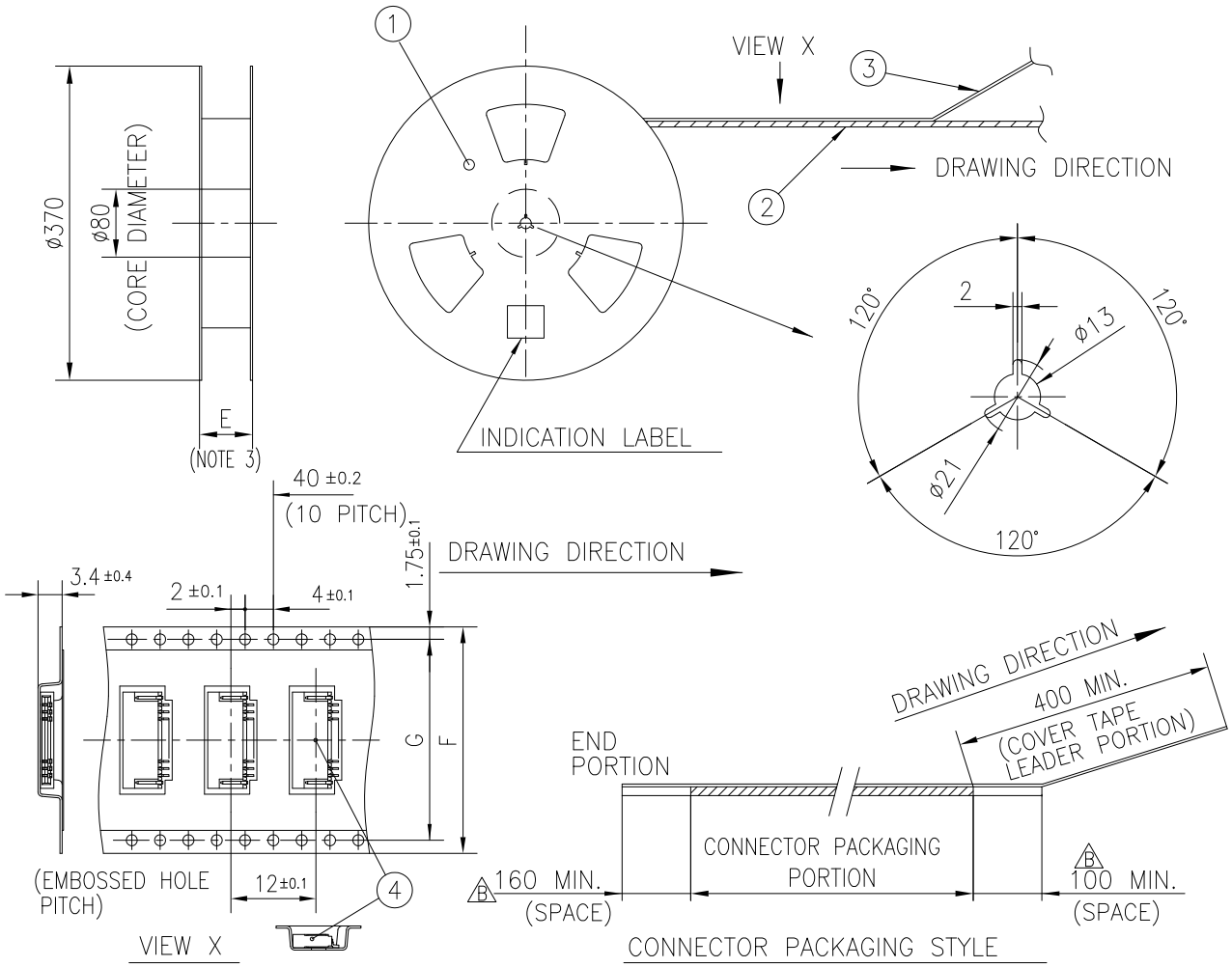

PT. NO.	PARTS NAME	CAT. NO.	MATERIAL	Q'TY	NOTE
1	REEL	———	CARDBOARD	1	COLOR:WHITE
2	PLASTIC (EMBOSSED) TAPE	———	B PS or A-PET	——	COLOR:TRANSPARENCY
3	COVER	———	B POLYESTER,POLYETHYLENE	——	COLOR:TRANSPARENCY
4	CONNECTOR	HFW__R-1ST__HLF	SEE SHEET 3	2000	LOWER CONTACT TYPE

NOTES

1. THIS IS PLASTIC TAPE PACKAGED CONNECTOR DESIGNED TO TERMINATE FPC/FFC AND COPES WITH AUTOMATIC MOUNTING (SMT).
2. SEE JIS C 0806 (PACKING OF ELECTRONIC COMPONENTS ON CONTINUOUS TAPES (SURFACE MOUNTING DEVICES)) FOR SHAPE AND DIMENSIONS OF PLASTIC (EMBOSSED) TAPE AND REEL.
3. E DIMENSION IS PORTION OF THE CORE.

mat'l. code —				surface ISO 1302	tolerance ISO 406 ISO 1101	projection	product family 58NF
ltr	ecn no	dr	date	tolerances unless otherwise specified			title
B				angles ±5°	linear ±5	MM	1mm SPACING SMT CONNECTOR (Cat.No. HFW__R-1STE1HLF)
						scale N/A	
				dr	S.WATANABE	2019-3-13	dwg no 10089213 sheet 6 of 9 size A4
				engr	S.WATANABE	2019-3-13	
				chr	S-H.THIO	2019-3-13	
				appd	Y.KAMEDA	2019-3-13	type Product Customer Drawing
sheet index	revision sheet						

© 2016 AFCI

PDS: Rev :B STATUS:Released Printed: Mar 13, 2019

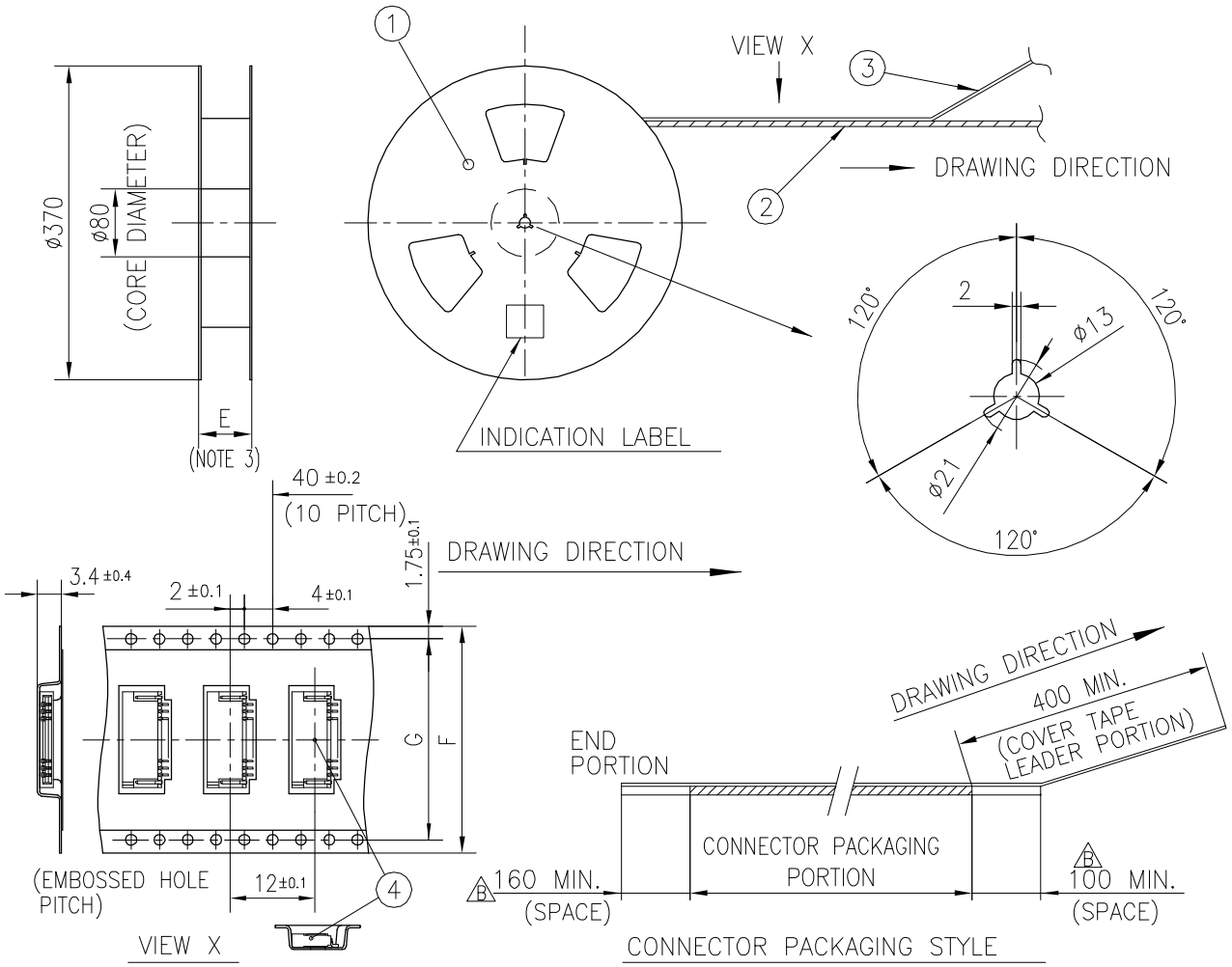

PT. NO.	PARTS NAME	CAT. NO.	MATERIAL	Q'TY	NOTE
1	REEL	———	CARDBOARD	1	COLOR:WHITE
2	PLASTIC (EMBOSSED) TAPE	———	B PS or A-PET	——	COLOR:TRANSPARENCY
3	COVER	———	B POLYESTER,POLYETHYLENE	——	COLOR:TRANSPARENCY
4	CONNECTOR	HFW__R-2ST__HLF	SEE SHEET 4	2000	UPPER CONTACT TYPE

NOTES

1. THIS IS PLASTIC TAPE PACKAGED CONNECTOR DESIGNED TO TERMINATE FPC/FFC AND COPES WITH AUTOMATIC MOUNTING (SMT).
2. SEE JIS C 0806 (PACKING OF ELECTRONIC COMPONENTS ON CONTINUOUS TAPES (SURFACE MOUNTING DEVICES)) FOR SHAPE AND DIMENSIONS OF PLASTIC (EMBOSSED) TAPE AND REEL.
3. E DIMENSION IS PORTION OF THE CORE.

mat'l. code —				surface ISO 1302	tolerance ISO 406 ISO 1101	projection	product family 58NF
ltr	ecn no	dr	date	tolerances unless otherwise specified			title
B				angles ±5°	linear ±5	MM	1mm SPACING SMT CONNECTOR (Cat.No. HFW__R-2STE1HLF)
						scale N/A	
				dr	S.WATANABE	2019-3-13	dwg no 10089213 sheet 7 of 9 size A4
				engr	S.WATANABE	2019-3-13	
				chr	S-H.THIO	2019-3-13	
				appd	Y.KAMEDA	2019-3-13	type Product Customer Drawing
sheet index	revision sheet						

© 2016 AFCI

PDS: Rev :B STATUS:Released Printed: Mar 13, 2019

RECOMMENDED CABLE (FPC)

n : NO. OF CONDUCTORS

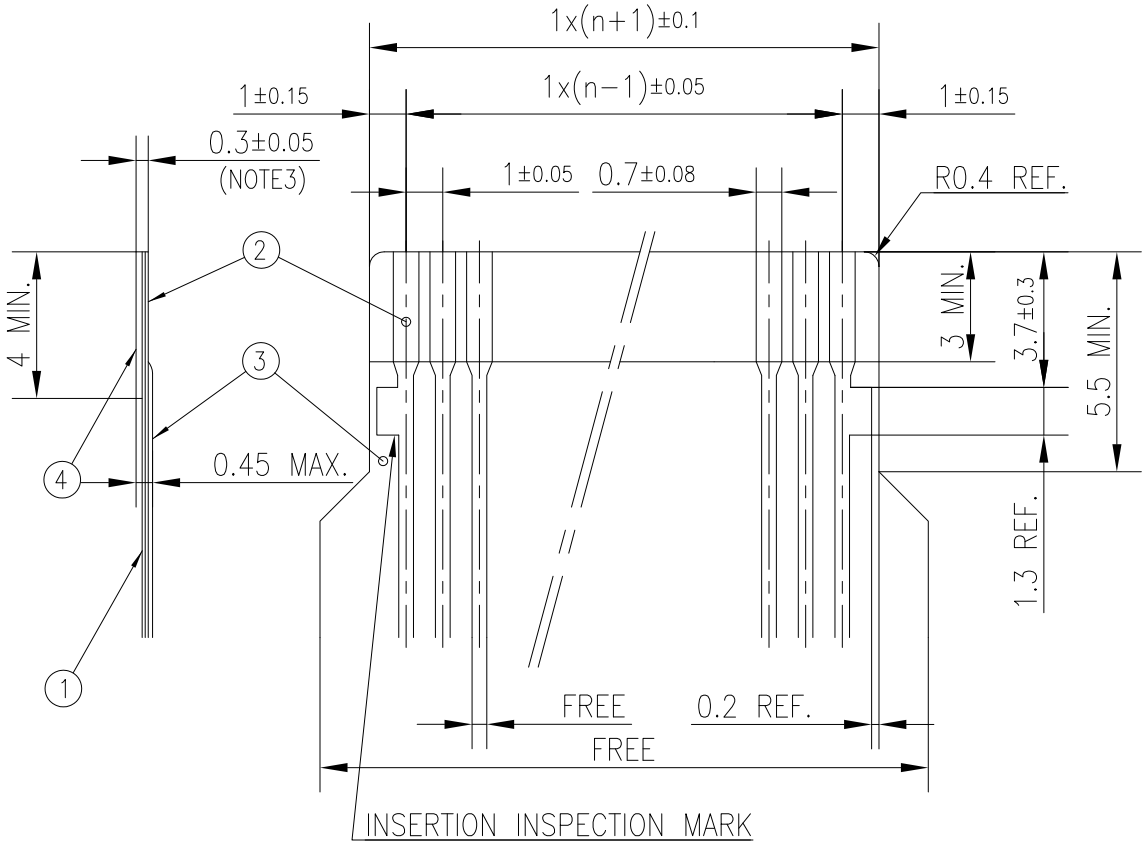

PT. NO.	DESCRIPTION	MATERIAL	THICKNESS (um)
1	BASE FILM	POLYIMIDE OR POLYESTER OR EQUIVALENT	25
2	CONDUCTOR	COPPER FOIL (PLATING : TIN OR SOLDER 1um MIN.)	35
3	OVERLAY	POLYIMIDE OR POLYESTER OR EQUIVALENT	——
4	SUPPORTING TAPE	POLYESTER OR POLYIMIDE OR EQUIVALENT	188

NOTES

1. NO BURR AT EACH PORTION.
2. NO PEELING IN COMMON USE.
3. TOTAL THICKNESS LIMIT OF EACH MATERIAL (INCLUDING ADHESIVE AGENT) IS SPECIFIED.

© 2016 AFCI

mat'l. code				surface ISO 1302	tolerance ISO 406 ISO 1101	projection	product family 58NF
ltr	ecn no	dr	date	tolerances unless otherwise specified			title
B				angles	linear	MM	RECOMMENDED CABLE (Cat. No. HFW__R-1/2___)
						scale N/A	
				dr	S.WATANABE	2019-3-13	dwg no 10089213 sheet 8 of 9 size A4
				engr	S.WATANABE	2019-3-13	
				chr	S-H.THIO	2019-3-13	
				appd	Y.KAMEDA	2019-3-13	type Product Customer Drawing
sheet index	revision sheet						

form: A4-2016-02-24

RECOMMENDED CABLE (FFC)

n : NO. OF CONDUCTORS

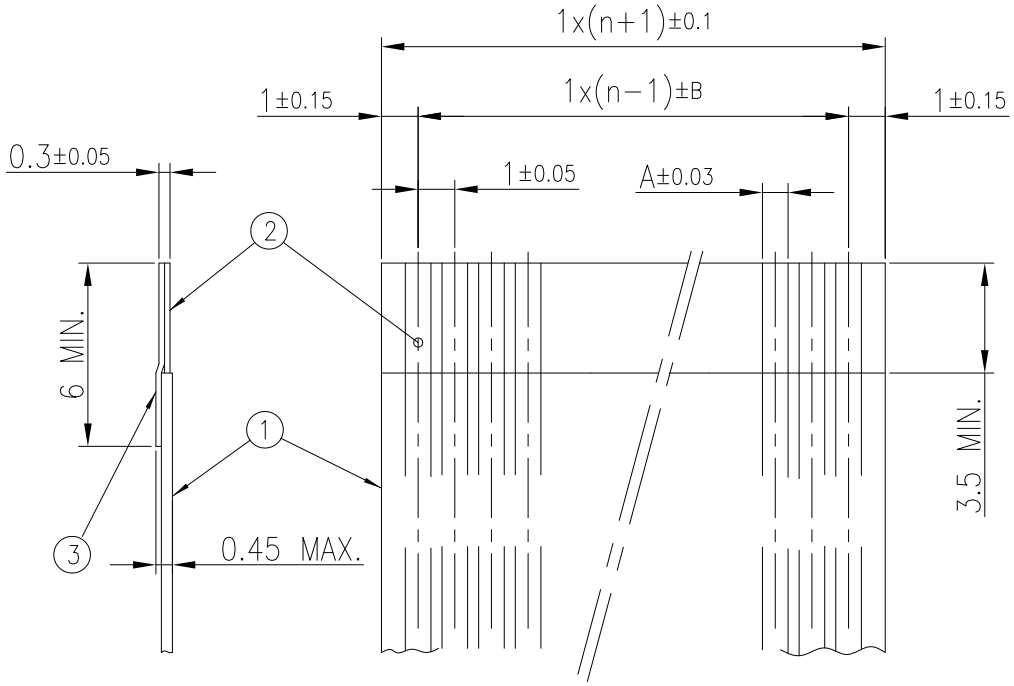

(NOTE3)	DIMENSION A	TOLERANCE B
1	0.7	0.1
2	0.6	0.07

PT. NO.	DESCRIPTION	MATERIAL
1	INSULATOR	FLAME RESISTING POLYESTER OR EQUIVALENT
2	CONDUCTOR	COPPER FOIL (PLATING : TIN OR SOLDER 1um MIN.)
3	SUPPORTING TAPE	FLAME RESISTING POLYESTER OR EQUIVALENT

NOTES

1. NO BURR AT EACH PORTION.
2. NO PEELING IN COMMON USE.
3. BOTH COMBINATION IS ALLOWED.

© 2016 AFCI

mat'l. code —				surface ISO 1302	tolerance ISO 406 ISO 1101	projection	product family 58NF
ltr	ecn no	dr	date	tolerances unless otherwise specified			title RECOMMENDED CABLE (Cat. No. HFW__R-1/2ST__)
B				angles	linear	MM	
						scale N/A	
				dr	S.WATANABE	2019-3-13	dwg no 10089213 sheet 9 of 9 size A4
				engr	S.WATANABE	2019-3-13	
				chr	S-H.THIO	2019-3-13	
				appd	Y.KAMEDA	2019-3-13	type Product Customer Drawing
sheet index	revision sheet						

form: A4-2016-02-24

ООО «ЛайфЭлектроникс» “LifeElectronics” LLC

ИНН 7805602321 КПП 780501001 Р/С 40702810122510004610 ФАКБ "АБСОЛЮТ БАНК" (ЗАО) в г.Санкт-Петербурге К/С 30101810900000000703 БИК 044030703

Компания «Life Electronics» занимается поставками электронных компонентов импортного и отечественного производства от производителей и со складов крупных дистрибьюторов Европы, Америки и Азии.

С конца 2013 года компания активно расширяет линейку поставок компонентов по направлению коаксиальный кабель, кварцевые генераторы и конденсаторы (керамические, пленочные, электролитические), за счёт заключения дистрибьюторских договоров

Мы предлагаем:

- *Конкурентоспособные цены и скидки постоянным клиентам.*
- *Специальные условия для постоянных клиентов.*
- *Подбор аналогов.*
- *Поставку компонентов в любых объемах, удовлетворяющих вашим потребностям.*

- *Приемлемые сроки поставки, возможна ускоренная поставка.*
- *Доставку товара в любую точку России и стран СНГ.*
- *Комплексную поставку.*
- *Работу по проектам и поставку образцов.*
- *Формирование склада под заказчика.*

- *Сертификаты соответствия на поставляемую продукцию (по желанию клиента).*
- *Тестирование поставляемой продукции.*
- *Поставку компонентов, требующих военную и космическую приемку.*
- *Входной контроль качества.*
- *Наличие сертификата ISO.*

В составе нашей компании организован Конструкторский отдел, призванный помогать разработчикам, и инженерам.

Конструкторский отдел помогает осуществить:

- *Регистрацию проекта у производителя компонентов.*
- *Техническую поддержку проекта.*
- *Защиту от снятия компонента с производства.*
- *Оценку стоимости проекта по компонентам.*
- *Изготовление тестовой платы монтаж и пусконаладочные работы.*

Тел: +7 (812) 336 43 04 (многоканальный)
Email: org@lifeelectronics.ru

www.lifeelectronics.ru