© Seiko Instruments Inc., 2008-2015 Rev.2.2_00

The S-1135 Series, developed using the CMOS technology, is a positive voltage regulator IC which has the low dropout voltage, the high-accuracy output voltage and the low current consumption (300 mA output current).
A 1.0 μF small ceramic capacitor can be used. It operates with low current consumption of 45 μA typ.
The overcurrent protection circuit prevents the load current from exceeding the current capacity of the output transistor. The ON / OFF circuit ensures longer battery life.
Various capacitors, also small ceramic capacitors, can be used for this IC more than for the conventional regulator ICs which have CMOS technology.
Furthermore, a small SOT-89-5, SOT-23-5, and HSNT-6A packages realize high-density mounting.

■ Features

- Output voltage: 1.0 V to 3.5 V, selectable in 0.05 V step
- Input voltage: 1.5 V to 5.5 V
- Output voltage accuracy: ±1.0% (1.0 V to 1.45 V output product : ±15 mV)
- Dropout voltage: 160 mV typ. (2.6 V output product, I_{OUT} = 300 mA)
- Current consumption: During operation: 45 μA typ., 65 μA max.
  During power-off: 0.1 μA typ., 1.0 μA max.
- Output current: Possible to output 300 mA ($V_{IN} \geq V_{OUT(S)}$ + 1.0 V)*1
- Input and output capacitors : A ceramic capacitor of 1.0 μF or more can be used.
- Ripple rejection: 70 dB typ. (1.0 V output product, f = 1.0 kHz)
- Built-in overcurrent protection circuit: Limits overcurrent of output transistor.
- Built-in ON / OFF circuit: Ensures long battery life.
- Discharge shunt function is selectable.
- Pull-up or pull-down resistor is selectable.
- Operation temperature range: Ta = −40°C to +85°C
- Lead-free, Sn 100%, halogen-free*2

***1.** Attention should be paid to the power dissipation of the package when the output current is large.
***2.** Refer to "■ **Product Name Structure**" for details.

■ Applications

- Power supply for battery-powered device
- Power supply for cellular phone
- Power supply for portable equipment

■ Packages

- SOT-89-5
- SOT-23-5
- HSNT-6A

■ Block Diagrams

1. S-1135 Series A type

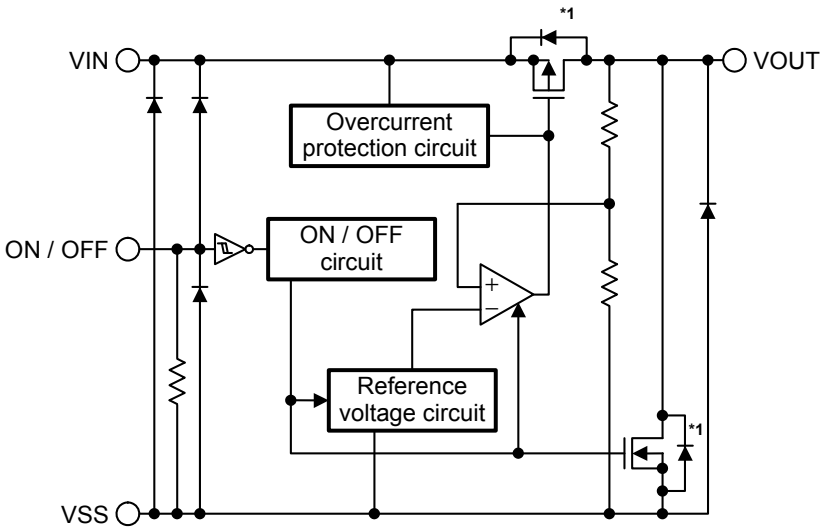

Function	Status
ON / OFF logic	Active “H”
Discharge shunt function	Available
Pull-up resistor	None
Pull-down resistor	Available

***1.** Parasitic diode

Figure 1

2. S-1135 Series B type

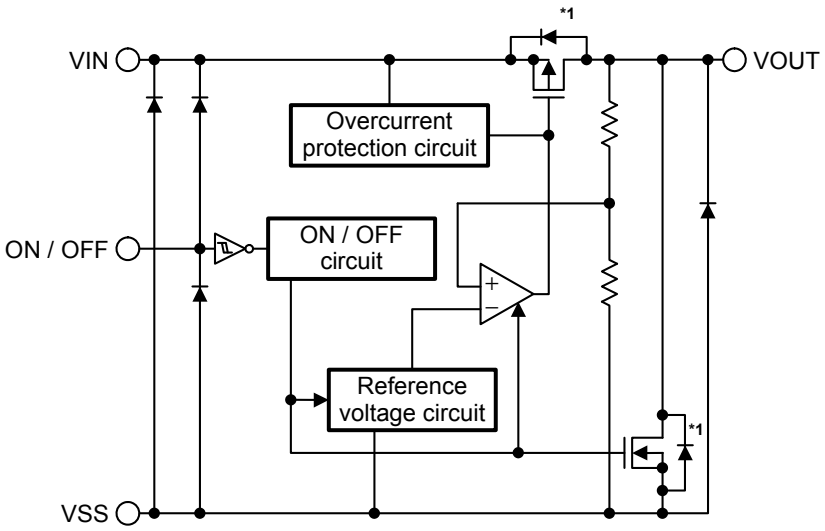

Function	Status
ON / OFF logic	Active “H”
Discharge shunt function	Available
Pull-up resistor	None
Pull-down resistor	None

***1.** Parasitic diode

Figure 2

3. S-1135 Series C type

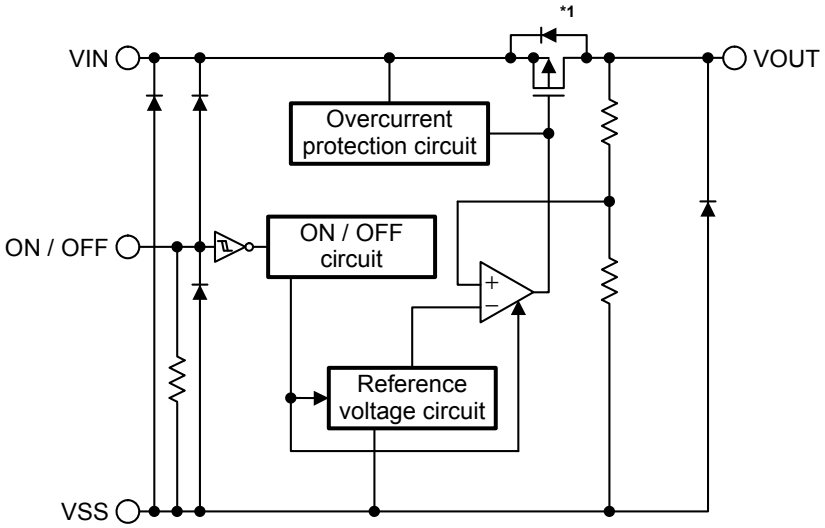

Function	Status
ON / OFF logic	Active “H”
Discharge shunt function	None
Pull-up resistor	None
Pull-down resistor	Available

***1.** Parasitic diode

Figure 3

4. S-1135 Series D type

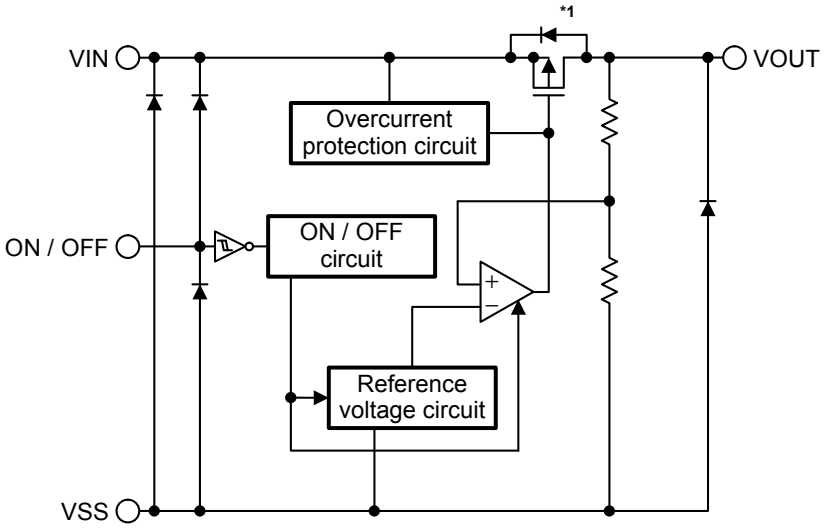

Function	Status
ON / OFF logic	Active “H”
Discharge shunt function	None
Pull-up resistor	None
Pull-down resistor	None

***1.** Parasitic diode

Figure 4

5. S-1135 Series E type

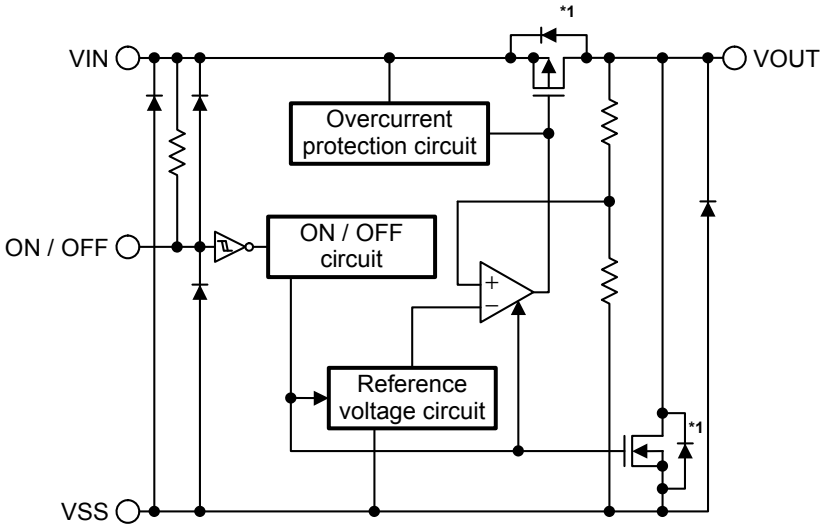

Function	Status
ON / OFF logic	Active “L”
Discharge shunt function	Available
Pull-up resistor	Available
Pull-down resistor	None

***1.** Parasitic diode

Figure 5

6. S-1135 Series F type

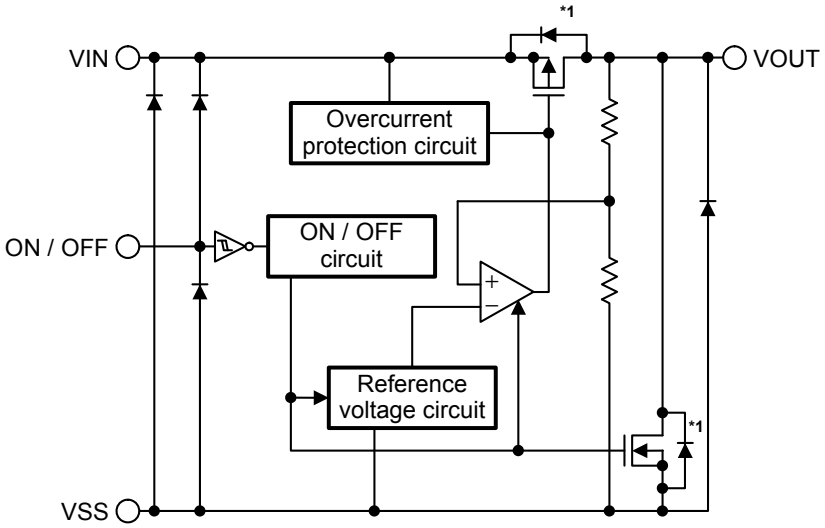

Function	Status
ON / OFF logic	Active “L”
Discharge shunt function	Available
Pull-up resistor	None
Pull-down resistor	None

***1.** Parasitic diode

Figure 6

7. S-1135 Series G type

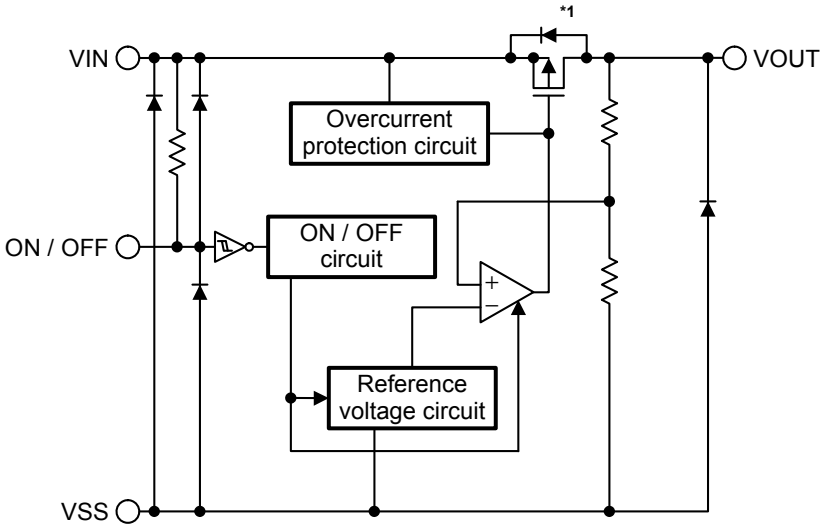

Function	Status
ON / OFF logic	Active “L”
Discharge shunt function	None
Pull-up resistor	Available
Pull-down resistor	None

***1.** Parasitic diode

Figure 7

8. S-1135 Series H type

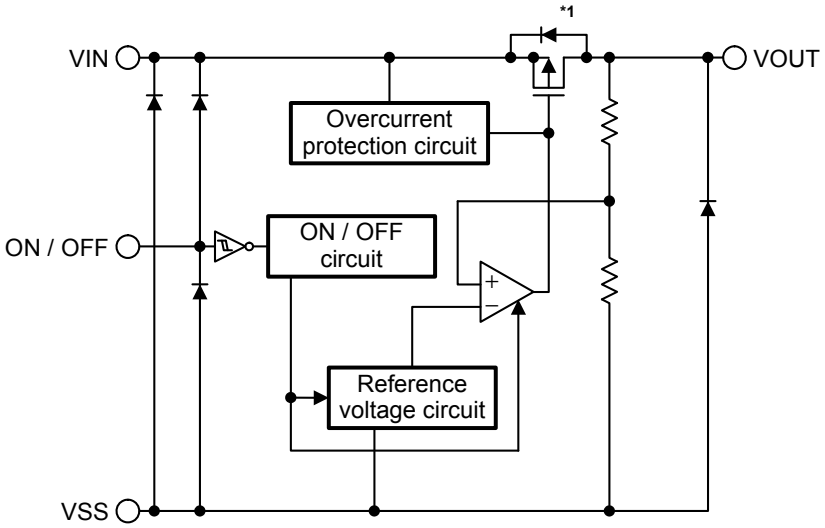

Function	Status
ON / OFF logic	Active “L”
Discharge shunt function	None
Pull-up resistor	None
Pull-down resistor	None

***1.** Parasitic diode

Figure 8

■ Product Name Structure

Users can select the product type, output voltage, and package type for the S-1135 Series. Refer to "**1. Product name**" regarding the contents of product name, "**2. Function list of product type**" regarding the product type, "**3. Packages**" regarding the package drawings.

1. Product name

1. 1 SOT-89-5

S-1135 x xx - U5T1 x

Environmental code
- U: Lead-free (Sn 100%), halogen-free
- G: Lead-free (for details, please contact our sales office)

Package abbreviation and IC packing specifications*1
- U5T1: SOT-89-5, Tape

Output voltage*2
- 10 to 35
- (e.g., when the output voltage is 1.0 V, it is expressed as 10.)

Product type*3
- A to H

***1.** Refer to the tape drawing.
***2.** If you request the product which has 0.05 V step, contact our sales office.
***3.** Refer to "**2. Function list of product type**".

1. 2 SOT-23-5

S-1135 x xx - M5T1 x

Environmental code
- U: Lead-free (Sn 100%), halogen-free
- S: Lead-free, halogen-free

Package abbreviation and IC packing specifications*1
- M5T1: SOT-23-5, Tape

Output voltage*2
- 10 to 35
- (e.g., when the output voltage is 1.0 V, it is expressed as 10.)

Product type*3
- A to H

***1.** Refer to the tape drawing.
***2.** If you request the product which has 0.05 V step, contact our sales office.
***3.** Refer to "**2. Function list of product type**".

1. 3 HSNT-6A

S-1135 x xx - A6T1 U

- U: Environmental code
  - U: Lead-free (Sn 100%), halogen-free
- A6T1: Package abbreviation and IC packing specifications*1
  - A6T1: HSNT-6A, Tape
- xx: Output voltage*2
  - 10 to 35
  - (e.g., when the output voltage is 1.0 V, it is expressed as 10.)
- x: Product type*3
  - A to H

***1.** Refer to the tape drawing.
***2.** If you request the product which has 0.05 V step, contact our sales office.
***3.** Refer to "**2. Function list of product type**".

2. Function list of product type

Table 1

Product Type	ON / OFF Logic	Discharge Shunt Function	Pull-up Resistor	Pull-down Resistor
A	Active "H"	Available	None	Available
B	Active "H"	Available	None	None
C	Active "H"	None	None	Available
D	Active "H"	None	None	None
E	Active "L"	Available	Available	None
F	Active "L"	Available	None	None
G	Active "L"	None	Available	None
H	Active "L"	None	None	None

3. Packages

Package Name	Drawing Code				
	Package	Tape	Reel	Land	Stencil Opening
SOT-89-5	UP005-A-P-SD	UP005-A-C-SD	UP005-A-R-SD	—	—
SOT-23-5	MP005-A-P-SD	MP005-A-C-SD	MP005-A-R-SD	—	—
HSNT-6A	PJ006-A-P-SD	PJ006-A-C-SD	PJ006-A-R-SD	PJ006-A-LM-SD	PJ006-A-LM-SD

4. Product name list

4. 1 S-1135 Series A type

ON / OFF logic:	Active “H”	Pull-up resistor:	None
Discharge shunt function:	Available	Pull-down resistor:	Available

Table 2

Output Voltage	SOT-89-5	SOT-23-5	HSNT-6A
1.0 V ±15 mV	S-1135A10-U5T1x	S-1135A10-M5T1y	S-1135A10-A6T1U
1.1 V ±15 mV	S-1135A11-U5T1x	S-1135A11-M5T1y	S-1135A11-A6T1U
1.2 V ±15 mV	S-1135A12-U5T1x	S-1135A12-M5T1y	S-1135A12-A6T1U
1.3 V ±15 mV	S-1135A13-U5T1x	S-1135A13-M5T1y	S-1135A13-A6T1U
1.4 V ±15 mV	S-1135A14-U5T1x	S-1135A14-M5T1y	S-1135A14-A6T1U
1.5 V ±1.0%	S-1135A15-U5T1x	S-1135A15-M5T1y	S-1135A15-A6T1U
1.6 V ±1.0%	S-1135A16-U5T1x	S-1135A16-M5T1y	S-1135A16-A6T1U
1.7 V ±1.0%	S-1135A17-U5T1x	S-1135A17-M5T1y	S-1135A17-A6T1U
1.8 V ±1.0%	S-1135A18-U5T1x	S-1135A18-M5T1y	S-1135A18-A6T1U
1.85 V ±1.0%	S-1135A1J-U5T1x	S-1135A1J-M5T1y	S-1135A1J-A6T1U
1.9 V ±1.0%	S-1135A19-U5T1x	S-1135A19-M5T1y	S-1135A19-A6T1U
2.0 V ±1.0%	S-1135A20-U5T1x	S-1135A20-M5T1y	S-1135A20-A6T1U
2.1 V ±1.0%	S-1135A21-U5T1x	S-1135A21-M5T1y	S-1135A21-A6T1U
2.2 V ±1.0%	S-1135A22-U5T1x	S-1135A22-M5T1y	S-1135A22-A6T1U
2.3 V ±1.0%	S-1135A23-U5T1x	S-1135A23-M5T1y	S-1135A23-A6T1U
2.4 V ±1.0%	S-1135A24-U5T1x	S-1135A24-M5T1y	S-1135A24-A6T1U
2.5 V ±1.0%	S-1135A25-U5T1x	S-1135A25-M5T1y	S-1135A25-A6T1U
2.6 V ±1.0%	S-1135A26-U5T1x	S-1135A26-M5T1y	S-1135A26-A6T1U
2.7 V ±1.0%	S-1135A27-U5T1x	S-1135A27-M5T1y	S-1135A27-A6T1U
2.8 V ±1.0%	S-1135A28-U5T1x	S-1135A28-M5T1y	S-1135A28-A6T1U
2.85 V ±1.0%	S-1135A2J-U5T1x	S-1135A2J-M5T1y	S-1135A2J-A6T1U
2.9 V ±1.0%	S-1135A29-U5T1x	S-1135A29-M5T1y	S-1135A29-A6T1U
3.0 V ±1.0%	S-1135A30-U5T1x	S-1135A30-M5T1y	S-1135A30-A6T1U
3.1 V ±1.0%	S-1135A31-U5T1x	S-1135A31-M5T1y	S-1135A31-A6T1U
3.2 V ±1.0%	S-1135A32-U5T1x	S-1135A32-M5T1y	S-1135A32-A6T1U
3.3 V ±1.0%	S-1135A33-U5T1x	S-1135A33-M5T1y	S-1135A33-A6T1U
3.4 V ±1.0%	S-1135A34-U5T1x	S-1135A34-M5T1y	S-1135A34-A6T1U
3.5 V ±1.0%	S-1135A35-U5T1x	S-1135A35-M5T1y	S-1135A35-A6T1U

Remark 1. Please contact our sales office for products with specifications other than the above.
2. x: G or U
y: S or U
3. Please select products of environmental code = U for Sn 100%, halogen-free products.

4. 2 S-1135 Series B type

ON / OFF logic:	Active “H”	Pull-up resistor:	None
Discharge shunt function:	Available	Pull-down resistor:	None

Table 3

Output Voltage	SOT-89-5	SOT-23-5	HSNT-6A
1.0 V ±15 mV	S-1135B10-U5T1x	S-1135B10-M5T1y	S-1135B10-A6T1U
1.1 V ±15 mV	S-1135B11-U5T1x	S-1135B11-M5T1y	S-1135B11-A6T1U
1.2 V ±15 mV	S-1135B12-U5T1x	S-1135B12-M5T1y	S-1135B12-A6T1U
1.3 V ±15 mV	S-1135B13-U5T1x	S-1135B13-M5T1y	S-1135B13-A6T1U
1.4 V ±15 mV	S-1135B14-U5T1x	S-1135B14-M5T1y	S-1135B14-A6T1U
1.5 V ±1.0%	S-1135B15-U5T1x	S-1135B15-M5T1y	S-1135B15-A6T1U
1.6 V ±1.0%	S-1135B16-U5T1x	S-1135B16-M5T1y	S-1135B16-A6T1U
1.7 V ±1.0%	S-1135B17-U5T1x	S-1135B17-M5T1y	S-1135B17-A6T1U
1.8 V ±1.0%	S-1135B18-U5T1x	S-1135B18-M5T1y	S-1135B18-A6T1U
1.85 V ±1.0%	S-1135B1J-U5T1x	S-1135B1J-M5T1y	S-1135B1J-A6T1U
1.9 V ±1.0%	S-1135B19-U5T1x	S-1135B19-M5T1y	S-1135B19-A6T1U
2.0 V ±1.0%	S-1135B20-U5T1x	S-1135B20-M5T1y	S-1135B20-A6T1U
2.1 V ±1.0%	S-1135B21-U5T1x	S-1135B21-M5T1y	S-1135B21-A6T1U
2.2 V ±1.0%	S-1135B22-U5T1x	S-1135B22-M5T1y	S-1135B22-A6T1U
2.3 V ±1.0%	S-1135B23-U5T1x	S-1135B23-M5T1y	S-1135B23-A6T1U
2.4 V ±1.0%	S-1135B24-U5T1x	S-1135B24-M5T1y	S-1135B24-A6T1U
2.5 V ±1.0%	S-1135B25-U5T1x	S-1135B25-M5T1y	S-1135B25-A6T1U
2.6 V ±1.0%	S-1135B26-U5T1x	S-1135B26-M5T1y	S-1135B26-A6T1U
2.7 V ±1.0%	S-1135B27-U5T1x	S-1135B27-M5T1y	S-1135B27-A6T1U
2.8 V ±1.0%	S-1135B28-U5T1x	S-1135B28-M5T1y	S-1135B28-A6T1U
2.85 V ±1.0%	S-1135B2J-U5T1x	S-1135B2J-M5T1y	S-1135B2J-A6T1U
2.9 V ±1.0%	S-1135B29-U5T1x	S-1135B29-M5T1y	S-1135B29-A6T1U
3.0 V ±1.0%	S-1135B30-U5T1x	S-1135B30-M5T1y	S-1135B30-A6T1U
3.1 V ±1.0%	S-1135B31-U5T1x	S-1135B31-M5T1y	S-1135B31-A6T1U
3.2 V ±1.0%	S-1135B32-U5T1x	S-1135B32-M5T1y	S-1135B32-A6T1U
3.3 V ±1.0%	S-1135B33-U5T1x	S-1135B33-M5T1y	S-1135B33-A6T1U
3.4 V ±1.0%	S-1135B34-U5T1x	S-1135B34-M5T1y	S-1135B34-A6T1U
3.5 V ±1.0%	S-1135B35-U5T1x	S-1135B35-M5T1y	S-1135B35-A6T1U

Remark 1. Please contact our sales office for products with specifications other than the above.
2. x: G or U
y: S or U
3. Please select products of environmental code = U for Sn 100%, halogen-free products.

4. 3 S-1135 Series C type

ON / OFF logic:	Active “H”	Pull-up resistor:	None
Discharge shunt function:	None	Pull-down resistor:	Available

Table 4

Output Voltage	SOT-89-5	SOT-23-5	HSNT-6A
1.0 V ±15 mV	S-1135C10-U5T1x	S-1135C10-M5T1y	S-1135C10-A6T1U
1.1 V ±15 mV	S-1135C11-U5T1x	S-1135C11-M5T1y	S-1135C11-A6T1U
1.2 V ±15 mV	S-1135C12-U5T1x	S-1135C12-M5T1y	S-1135C12-A6T1U
1.3 V ±15 mV	S-1135C13-U5T1x	S-1135C13-M5T1y	S-1135C13-A6T1U
1.4 V ±15 mV	S-1135C14-U5T1x	S-1135C14-M5T1y	S-1135C14-A6T1U
1.5 V ±1.0%	S-1135C15-U5T1x	S-1135C15-M5T1y	S-1135C15-A6T1U
1.6 V ±1.0%	S-1135C16-U5T1x	S-1135C16-M5T1y	S-1135C16-A6T1U
1.7 V ±1.0%	S-1135C17-U5T1x	S-1135C17-M5T1y	S-1135C17-A6T1U
1.8 V ±1.0%	S-1135C18-U5T1x	S-1135C18-M5T1y	S-1135C18-A6T1U
1.85 V ±1.0%	S-1135C1J-U5T1x	S-1135C1J-M5T1y	S-1135C1J-A6T1U
1.9 V ±1.0%	S-1135C19-U5T1x	S-1135C19-M5T1y	S-1135C19-A6T1U
2.0 V ±1.0%	S-1135C20-U5T1x	S-1135C20-M5T1y	S-1135C20-A6T1U
2.1 V ±1.0%	S-1135C21-U5T1x	S-1135C21-M5T1y	S-1135C21-A6T1U
2.2 V ±1.0%	S-1135C22-U5T1x	S-1135C22-M5T1y	S-1135C22-A6T1U
2.3 V ±1.0%	S-1135C23-U5T1x	S-1135C23-M5T1y	S-1135C23-A6T1U
2.4 V ±1.0%	S-1135C24-U5T1x	S-1135C24-M5T1y	S-1135C24-A6T1U
2.5 V ±1.0%	S-1135C25-U5T1x	S-1135C25-M5T1y	S-1135C25-A6T1U
2.6 V ±1.0%	S-1135C26-U5T1x	S-1135C26-M5T1y	S-1135C26-A6T1U
2.7 V ±1.0%	S-1135C27-U5T1x	S-1135C27-M5T1y	S-1135C27-A6T1U
2.8 V ±1.0%	S-1135C28-U5T1x	S-1135C28-M5T1y	S-1135C28-A6T1U
2.85 V ±1.0%	S-1135C2J-U5T1x	S-1135C2J-M5T1y	S-1135C2J-A6T1U
2.9 V ±1.0%	S-1135C29-U5T1x	S-1135C29-M5T1y	S-1135C29-A6T1U
3.0 V ±1.0%	S-1135C30-U5T1x	S-1135C30-M5T1y	S-1135C30-A6T1U
3.1 V ±1.0%	S-1135C31-U5T1x	S-1135C31-M5T1y	S-1135C31-A6T1U
3.2 V ±1.0%	S-1135C32-U5T1x	S-1135C32-M5T1y	S-1135C32-A6T1U
3.3 V ±1.0%	S-1135C33-U5T1x	S-1135C33-M5T1y	S-1135C33-A6T1U
3.4 V ±1.0%	S-1135C34-U5T1x	S-1135C34-M5T1y	S-1135C34-A6T1U
3.5 V ±1.0%	S-1135C35-U5T1x	S-1135C35-M5T1y	S-1135C35-A6T1U

Remark 1. Please contact our sales office for products with specifications other than the above.
2. x: G or U
y: S or U
3. Please select products of environmental code = U for Sn 100%, halogen-free products.

4. 4 S-1135 Series D type

ON / OFF logic:	Active “H”	Pull-up resistor:	None
Discharge shunt function:	None	Pull-down resistor:	None

Table 5

Output Voltage	SOT-89-5	SOT-23-5	HSNT-6A
1.0 V ±15 mV	S-1135D10-U5T1x	S-1135D10-M5T1y	S-1135D10-A6T1U
1.1 V ±15 mV	S-1135D11-U5T1x	S-1135D11-M5T1y	S-1135D11-A6T1U
1.2 V ±15 mV	S-1135D12-U5T1x	S-1135D12-M5T1y	S-1135D12-A6T1U
1.3 V ±15 mV	S-1135D13-U5T1x	S-1135D13-M5T1y	S-1135D13-A6T1U
1.4 V ±15 mV	S-1135D14-U5T1x	S-1135D14-M5T1y	S-1135D14-A6T1U
1.5 V ±1.0%	S-1135D15-U5T1x	S-1135D15-M5T1y	S-1135D15-A6T1U
1.6 V ±1.0%	S-1135D16-U5T1x	S-1135D16-M5T1y	S-1135D16-A6T1U
1.7 V ±1.0%	S-1135D17-U5T1x	S-1135D17-M5T1y	S-1135D17-A6T1U
1.8 V ±1.0%	S-1135D18-U5T1x	S-1135D18-M5T1y	S-1135D18-A6T1U
1.85 V ±1.0%	S-1135D1J-U5T1x	S-1135D1J-M5T1y	S-1135D1J-A6T1U
1.9 V ±1.0%	S-1135D19-U5T1x	S-1135D19-M5T1y	S-1135D19-A6T1U
2.0 V ±1.0%	S-1135D20-U5T1x	S-1135D20-M5T1y	S-1135D20-A6T1U
2.1 V ±1.0%	S-1135D21-U5T1x	S-1135D21-M5T1y	S-1135D21-A6T1U
2.2 V ±1.0%	S-1135D22-U5T1x	S-1135D22-M5T1y	S-1135D22-A6T1U
2.3 V ±1.0%	S-1135D23-U5T1x	S-1135D23-M5T1y	S-1135D23-A6T1U
2.4 V ±1.0%	S-1135D24-U5T1x	S-1135D24-M5T1y	S-1135D24-A6T1U
2.5 V ±1.0%	S-1135D25-U5T1x	S-1135D25-M5T1y	S-1135D25-A6T1U
2.6 V ±1.0%	S-1135D26-U5T1x	S-1135D26-M5T1y	S-1135D26-A6T1U
2.7 V ±1.0%	S-1135D27-U5T1x	S-1135D27-M5T1y	S-1135D27-A6T1U
2.8 V ±1.0%	S-1135D28-U5T1x	S-1135D28-M5T1y	S-1135D28-A6T1U
2.85 V ±1.0%	S-1135D2J-U5T1x	S-1135D2J-M5T1y	S-1135D2J-A6T1U
2.9 V ±1.0%	S-1135D29-U5T1x	S-1135D29-M5T1y	S-1135D29-A6T1U
3.0 V ±1.0%	S-1135D30-U5T1x	S-1135D30-M5T1y	S-1135D30-A6T1U
3.1 V ±1.0%	S-1135D31-U5T1x	S-1135D31-M5T1y	S-1135D31-A6T1U
3.2 V ±1.0%	S-1135D32-U5T1x	S-1135D32-M5T1y	S-1135D32-A6T1U
3.3 V ±1.0%	S-1135D33-U5T1x	S-1135D33-M5T1y	S-1135D33-A6T1U
3.4 V ±1.0%	S-1135D34-U5T1x	S-1135D34-M5T1y	S-1135D34-A6T1U
3.5 V ±1.0%	S-1135D35-U5T1x	S-1135D35-M5T1y	S-1135D35-A6T1U

Remark 1. Please contact our sales office for products with specifications other than the above.
2. x: G or U
y: S or U
3. Please select products of environmental code = U for Sn 100%, halogen-free products.

■ Pin Configurations

SOT-89-5
Top view

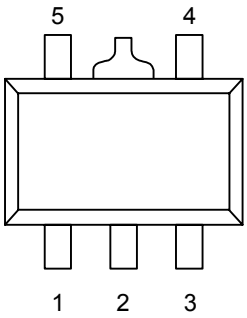

Figure 9

Table 6

Pin No.	Symbol	Description
1	VOUT	Output voltage pin
2	VSS	GND pin
3	NC*1	No connection
4	ON / OFF	ON / OFF pin
5	VIN	Input voltage pin

***1.** The NC pin is electrically open.
The NC pin can be connected to VIN or VSS.

SOT-23-5
Top view

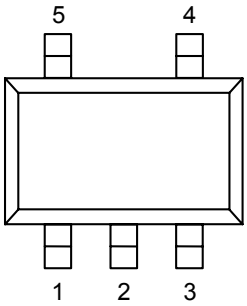

Figure 10

Table 7

Pin No.	Symbol	Description
1	VIN	Input voltage pin
2	VSS	GND pin
3	ON / OFF	ON / OFF pin
4	NC*1	No connection
5	VOUT	Output voltage pin

***1.** The NC pin is electrically open.
The NC pin can be connected to VIN or VSS.

HSNT-6A
Top view

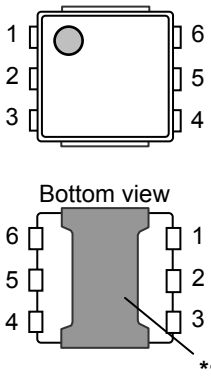

***1.** Connect the heat sink of backside at shadowed area to the board, and set electric potential open or GND.
However, do not use it as the function of electrode.

Figure 11

Table 8

Pin No.	Symbol	Description
1	VOUT	Output voltage pin
2	VSS	GND pin
3	NC*1	No connection
4	ON / OFF	ON / OFF pin
5	NC*1	No connection
6	VIN	Input voltage pin

***1.** The NC pin is electrically open.
The NC pin can be connected to VIN or VSS.

■ Absolute Maximum Ratings

Table 9

(Ta = 25°C unless otherwise specified)

Item		Symbol	Absolute Maximum Rating	Unit
Input voltage		V_{IN}	V_{SS} − 0.3 to V_{SS} + 6.0	V
		$V_{ON / OFF}$	V_{SS} − 0.3 to V_{IN} + 0.3	V
Output voltage		V_{OUT}	V_{SS} − 0.3 to V_{IN} + 0.3	V
Power dissipation	SOT-89-5	P_D	1000*1	mW
	SOT-23-5		600*1	mW
	HSNT-6A		1000*2	mW
Operation ambient temperature		T_{opr}	−40 to +85	°C
Storage temperature		T_{stg}	−40 to +125	°C

***1.** When mounted on board
[Mounted board]
(1) Board size : 114.3 mm × 76.2 mm × t1.6 mm
(2) Name : JEDEC STANDARD51-7

***2.** When mounted on board
[Mounted board]
(1) Board size : 50 mm × 50 mm × t1.6 mm
(2) Wiring ratio : 50%

Caution The absolute maximum ratings are rated values exceeding which the product could suffer physical damage. These values must therefore not be exceeded under any conditions.

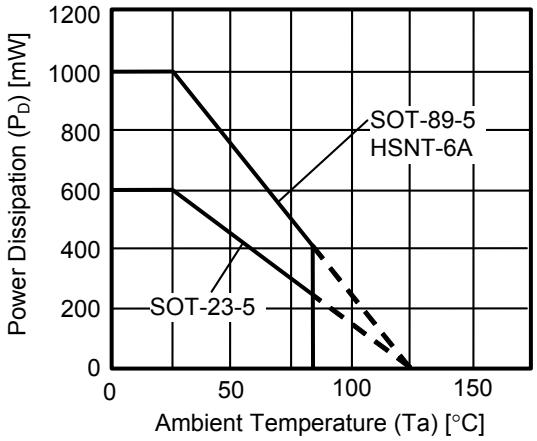

Figure 12 Power Dissipation of Package

■ Electrical Characteristics

Table 10 (1 / 2)

(Ta = 25°C unless otherwise specified)

Item	Symbol	Conditions		Min.	Typ.	Max.	Unit	Test Circuit
Output voltage*1	$V_{OUT(E)}$	$V_{IN} = V_{OUT(S)} + 1.0$ V, $I_{OUT} = 100$ mA	$1.0 \text{ V} \le V_{OUT(S)} < 1.5$ V	$V_{OUT(S)} - 0.015$	$V_{OUT(S)}$	$V_{OUT(S)} + 0.015$	V	1
			$1.5 \text{ V} \le V_{OUT(S)} \le 3.5$ V	$V_{OUT(S)} \times 0.99$	$V_{OUT(S)}$	$V_{OUT(S)} \times 1.01$	V	1
Output current*2	I_{OUT}	$V_{IN} \ge V_{OUT(S)} + 1.0$ V		300*5	—	—	mA	3
Dropout voltage*3	V_{drop}	$I_{OUT} = 300$ mA	$1.0 \text{ V} \le V_{OUT(S)} < 1.1$ V	0.50	0.61	0.72	V	1
			$1.1 \text{ V} \le V_{OUT(S)} < 1.2$ V	—	0.49	0.61	V	1
			$1.2 \text{ V} \le V_{OUT(S)} < 1.3$ V	—	0.38	0.53	V	1
			$1.3 \text{ V} \le V_{OUT(S)} < 1.4$ V	—	0.31	0.47	V	1
			$1.4 \text{ V} \le V_{OUT(S)} < 1.5$ V	—	0.27	0.41	V	1
			$1.5 \text{ V} \le V_{OUT(S)} < 2.0$ V	—	0.25	0.38	V	1
			$2.0 \text{ V} \le V_{OUT(S)} < 2.6$ V	—	0.21	0.32	V	1
			$2.6 \text{ V} \le V_{OUT(S)} \le 3.5$ V	—	0.16	0.26	V	1
Line regulation	$\frac{\Delta V_{OUT1}}{\Delta V_{IN} \bullet V_{OUT}}$	$1.6 \text{ V} \le V_{IN} \le 5.5$ V, $I_{OUT} = 100$ mA	$1.0 \text{ V} \le V_{OUT(S)} < 1.1$ V	—	0.05	0.2	%/V	1
		$V_{OUT(S)} + 0.5 \text{ V} \le V_{IN} \le 5.5$ V, $I_{OUT} = 100$ mA	$1.1 \text{ V} \le V_{OUT(S)} \le 3.5$ V	—	0.05	0.2	%/V	1
Load regulation	ΔV_{OUT2}	$V_{IN} = V_{OUT(S)} + 1.0$ V, $1.0 \text{ mA} \le I_{OUT} \le 150$ mA	$1.0 \text{ V} \le V_{OUT(S)} \le 2.0$ V	—	15	20	mV	1
			$2.0 \text{ V} < V_{OUT(S)} \le 3.5$ V	—	15	25	mV	1
		$V_{IN} = V_{OUT(S)} + 1.0$ V, $1.0 \text{ mA} \le I_{OUT} \le 300$ mA	$1.0 \text{ V} \le V_{OUT(S)} \le 3.0$ V	—	30	40	mV	1
			$3.0 \text{ V} < V_{OUT(S)} \le 3.5$ V	—	30	45	mV	1
Output voltage temperature coefficient*4	$\frac{\Delta V_{OUT}}{\Delta Ta \bullet V_{OUT}}$	$V_{IN} = V_{OUT(S)} + 1.0$ V, $I_{OUT} = 100$ mA, $-40°C \le Ta \le +85°C$		—	±130	—	ppm/°C	1
Current consumption during operation	I_{SS1}	$V_{IN} = V_{OUT(S)} + 1.0$ V, ON / OFF pin = ON, no load		—	45	65	μA	2
Current consumption during power-off	I_{SS2}	$V_{IN} = V_{OUT(S)} + 1.0$ V, ON / OFF pin = OFF, no load		—	0.1	1.0	μA	2
Input voltage	V_{IN}	—		1.5	—	5.5	V	—
ON / OFF pin input voltage "H"	V_{SH}	$V_{IN} = V_{OUT(S)} + 1.0$ V, $R_L = 1.0$ kΩ determined by V_{OUT} output level		1.0	—	—	V	4
ON / OFF pin input voltage "L"	V_{SL}	$V_{IN} = V_{OUT(S)} + 1.0$ V, $R_L = 1.0$ kΩ determined by V_{OUT} output level		—	—	0.3	V	4
ON / OFF pin input current "H"	I_{SH}	$V_{IN} = 5.5$ V, $V_{ON / OFF} = 5.5$ V	B / D / E / F / G / H type	−0.1	—	0.1	μA	4
			A / C type	1.0	2.5	5.0	μA	4
ON / OFF pin input current "L"	I_{SL}	$V_{IN} = 5.5$ V, $V_{ON / OFF} = 0$ V	A / B / C / D / F / H type	−0.1	—	0.1	μA	4
			E / G type	1.0	2.5	5.0	μA	4
Ripple rejection	$\lvert RR \rvert$	$V_{IN} = V_{OUT(S)} + 1.0$ V, f = 1.0 kHz, $\Delta V_{rip} = 0.5$ Vrms, $I_{OUT} = 50$ mA	$1.0 \text{ V} \le V_{OUT(S)} \le 1.2$ V	—	70	—	dB	5
			$1.2 \text{ V} < V_{OUT(S)} \le 3.5$ V	—	65	—	dB	5
Short-circuit current	I_{short}	$V_{IN} = V_{OUT(S)} + 1.0$ V, ON / OFF pin = ON, $V_{OUT} = 0$ V		—	100	—	mA	3

Table 10 (2 / 2)

S-1135 Series A / B / E / F type (With discharge shunt function)

Item	Symbol	Conditions	Min.	Typ.	Max.	Unit	Test Circuit
"L" output Nch ON resistance	R_{LOW}	V_{OUT} = 0.1 V, V_{IN} = 5.5 V	—	35	—	Ω	3

S-1135 Series A / C / E / G type (With pull-up / pull-down resistor)

Item	Symbol	Conditions	Min.	Typ.	Max.	Unit	Test Circuit
Power-off pull-up / pull-down resistor	R_{PD}	—	1.0	2.2	5.0	MΩ	4

***1.** $V_{OUT(S)}$: Set output voltage
$V_{OUT(E)}$: Actual output voltage
Output voltage when fixing I_{OUT}(= 100 mA) and inputting $V_{OUT(S)}$ +1.0 V

***2.** The output current at which the output voltage becomes 95% of $V_{OUT(E)}$ after gradually increasing the output current.

***3.** $V_{drop} = V_{IN1} - (V_{OUT3} \times 0.98)$
V_{OUT3} is the output voltage when $V_{IN} = V_{OUT(S)} + 1.0$ V and I_{OUT} = 300 mA.
V_{IN1} is the input voltage at which the output voltage becomes 98% of V_{OUT3} after gradually decreasing the input voltage.

***4.** A change in the temperature of the output voltage [mV/°C] is calculated using the following equation.

$$\frac{\Delta V_{OUT}}{\Delta Ta}[\text{mV/°C}]^{*1} = V_{OUT(S)}[\text{V}]^{*2} \times \frac{\Delta V_{OUT}}{\Delta Ta \bullet V_{OUT}}[\text{ppm/°C}]^{*3} \div 1000$$

***1.** Change in temperature of output voltage
***2.** Set output voltage
***3.** Output voltage temperature coefficient

***5.** The output current can be at least this value.
Due to restrictions on the package power dissipation, this value may not be satisfied. Attention should be paid to the power dissipation of the package when the output current is large.
This specification is guaranteed by design.

■ Test Circuits

1.

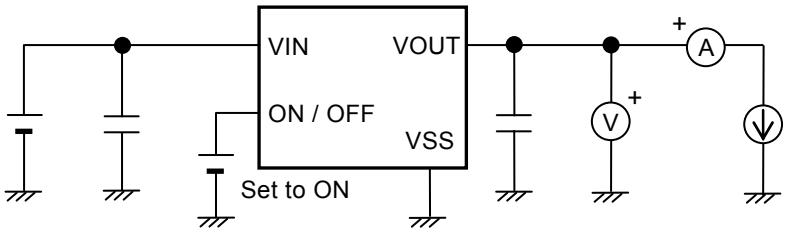

Figure 13

2.

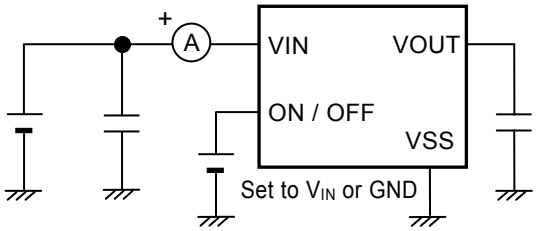

Figure 14

3.

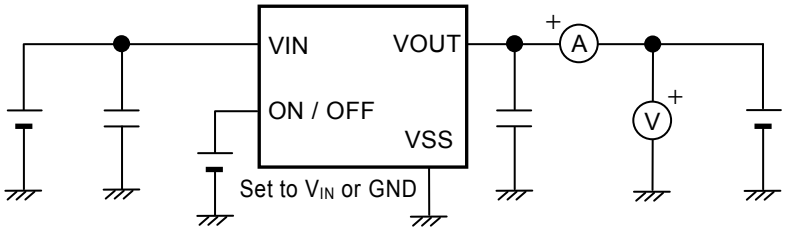

Figure 15

4.

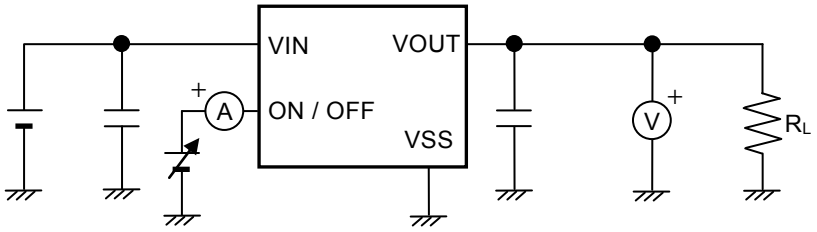

Figure 16

5.

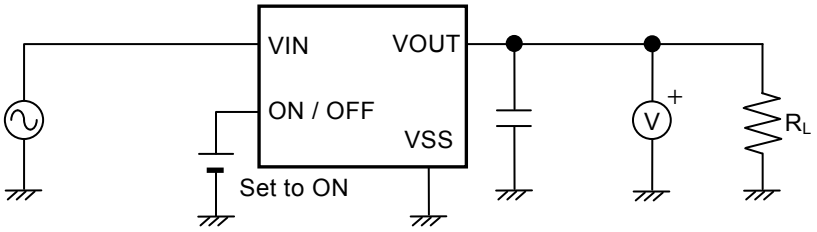

Figure 17

■ Standard Circuit

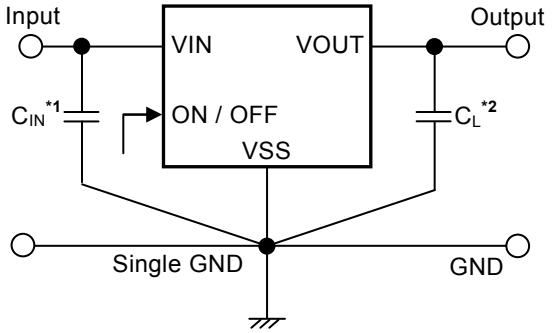

***1.** C_{IN} is a capacitor for stabilizing the input.
***2.** A ceramic capacitor of 1.0 μF or more can be used as C_L.

Figure 18

Caution The above connection diagram and constant will not guarantee successful operation. Perform thorough evaluation using the actual application to set the constant.

■ Condition of Application

Input capacitor (C_{IN}) : 1.0 μF or more
Output capacitor (C_L) : 1.0 μF or more

Caution Generally a series regulator may cause oscillation, depending on the selection of external parts. Confirm that no oscillation occurs in the application for which the above capacitors are used.

■ Selection of Input and Output Capacitors (C_{IN}, C_L)

The S-1135 Series requires an output capacitor between the VOUT and VSS pin for phase compensation. Operation is stabilized by a ceramic capacitor with an output capacitance of 1.0 μF or more over the entire temperature range. When using an OS capacitor, a tantalum capacitor, or an aluminum electrolytic capacitor, the capacitance must be 1.0 μF or more.
The value of the output overshoot or undershoot transient response varies depending on the value of the output capacitor. The required capacitance of the input capacitor differs depending on the application.
The recommended capacitance for an application is $C_{IN} \geq 1.0$ μF, $C_L \geq 1.0$ μF; however, when selecting the output capacitor, perform sufficient evaluation, including evaluation of temperature characteristics, on the actual device.

■ Explanation of Terms

1. Low dropout voltage regulator

This voltage regulator has the low dropout voltage due to its built-in low on-resistance transistor.

2. Output voltage (V_{OUT})

The accuracy of the output voltage is ensured at ±1.0% or ±15 mV[*1] under the specified conditions of fixed input voltage[*2], fixed output current, and fixed temperature.

***1.** When V_{OUT} < 1.5 V : ±15 mV, When 1.5 V ≤ V_{OUT} : ±1.0%
***2.** Differs depending on the product.

Caution If the above conditions change, the output voltage value may vary and exceed the accuracy range of the output voltage. Refer to "■ Electrical Characteristics" and "■ Characteristics (Typical Data)" for details.

3. Line regulation $\left(\frac{\Delta V_{OUT1}}{\Delta V_{IN} \bullet V_{OUT}}\right)$

Indicates the dependency of the output voltage on the input voltage. That is, the values show how much the output voltage changes due to a change in the input voltage with the output current remaining unchanged.

4. Load regulation (ΔV_{OUT2})

Indicates the dependency of the output voltage on the output current. That is, the values show how much the output voltage changes due to a change in the output current with the input voltage remaining unchanged.

5. Dropout voltage (V_{drop})

Indicates the difference between input voltage (V_{IN1}) and the output voltage when; decreasing input voltage (V_{IN}) gradually until the output voltage has dropped out to the value of 98% of output voltage (V_{OUT3}), which is at V_{IN} = $V_{OUT(S)}$ + 1.0 V.

$V_{drop} = V_{IN1} - (V_{OUT3} \times 0.98)$

6. Output voltage temperature coefficient $\left(\frac{\Delta V_{OUT}}{\Delta Ta \bullet V_{OUT}}\right)$

The shaded area in **Figure 19** is the range where V_{OUT} varies in the operation temperature range when the output voltage temperature coefficient is ±130 ppm/°C.

Example of S-1135B30 typ. product

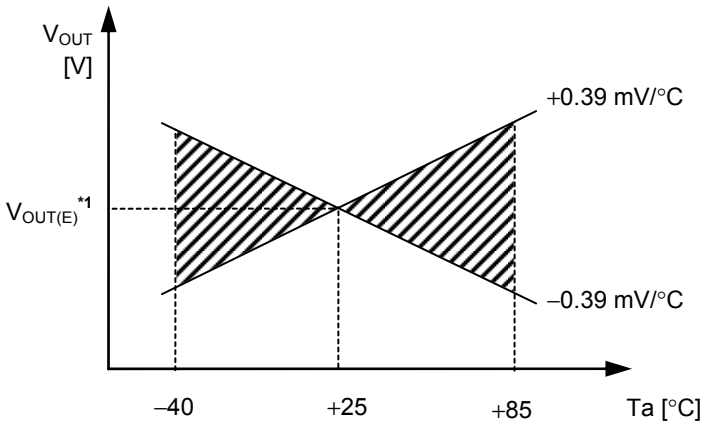

***1.** $V_{OUT(E)}$ is the value of the output voltage measured at Ta = +25°C.

Figure 19

A change in the temperature of the output voltage [mV/°C] is calculated using the following equation.

$$\frac{\Delta V_{OUT}}{\Delta Ta}[\text{mV/°C}]^{*1} = V_{OUT(S)}[\text{V}]^{*2} \times \frac{\Delta V_{OUT}}{\Delta Ta \bullet V_{OUT}}[\text{ppm/°C}]^{*3} \div 1000$$

***1.** Change in temperature of output voltage
***2.** Set output voltage
***3.** Output voltage temperature coefficient

■ Operation

1. Basic operation

Figure 20 shows the block diagram of the S-1135 Series.
The error amplifier compares the reference voltage (V_{ref}) with feedback voltage (V_{fb}), which is the output voltage resistance-divided by feedback resistors (R_s and R_f). It supplies the gate voltage necessary to maintain the constant output voltage which is not influenced by the input voltage and temperature change, to the output transistor.

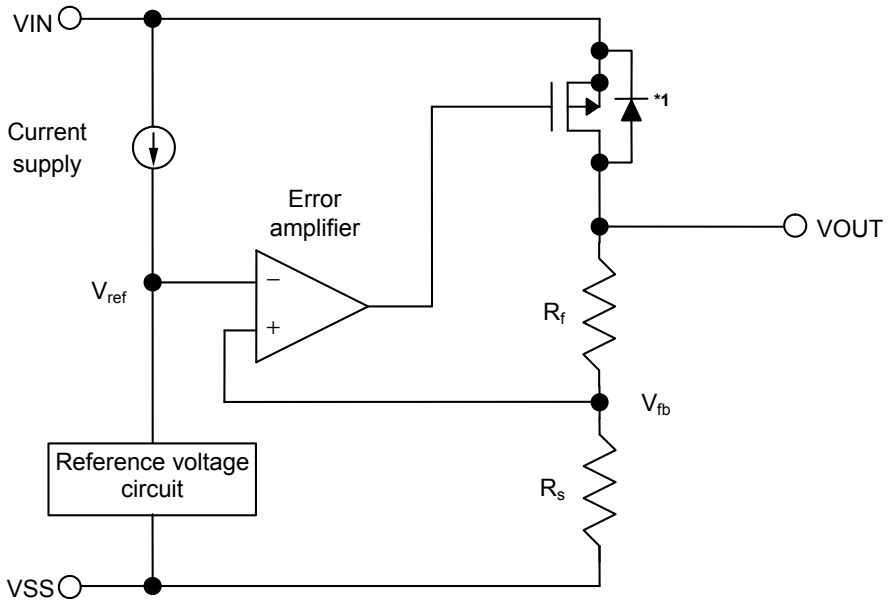

***1**. Parasitic diode

Figure 20

2. Output transistor

In the S-1135 Series, a low on-resistance P-channel MOS FET is used as the output transistor.
Be sure that V_{OUT} does not exceed V_{IN} + 0.3 V to prevent the voltage regulator from being damaged due to reverse current flowing from the VOUT pin through a parasitic diode to the VIN pin, when the potential of V_{OUT} became higher than V_{IN}.

3. ON / OFF pin

This pin starts and stops the regulator.

When the ON / OFF pin is set to OFF level, the entire internal circuit stops operating, and the built-in P-channel MOS FET output transistor between the VIN and VOUT pins is turned off, reducing current consumption significantly.
Since the S-1135 Series A / B / E / F type has a built-in discharge shunt circuit to discharge the output capacitance, the VOUT pin is forcibly set to V_{SS} level. In the S-1135 Series C / D / G / H type, the VOUT pin is set to V_{SS} level through several hundred kΩ internal divided resistors between the VOUT and VSS pins. Note that the current consumption increases when a voltage of 0.3 V to 1.0 V (Ta = 25°C) is applied to the ON / OFF pin.

The ON / OFF pin is configured as shown in **Figures 21** and **22**. In the S-1135 Series A / C / E / G type, the ON / OFF pin is internally pulled up to the VIN pin or pulled down to the VSS pin in the floating status, so the VOUT pin is set to the V_{SS} level. In the S-1135 Series B / D / F / H type, the ON / OFF pin is not internally pulled up or pulled down, so do not use the ON / OFF pin in the floating status. When not using the ON / OFF pin, connect it to the VIN pin in the product B / D type, and connect it to the VSS pin in the F / H type.

Table 11

Product Type	ON / OFF Pin	Internal Circuit	VOUT Pin Voltage	Current Consumption
A / B / C / D	"H": ON	Operate	Set value	I_{SS1} *1
A / B / C / D	"L": OFF	Stop	V_{SS} level	I_{SS2}
E / F / G / H	"H": OFF	Stop	V_{SS} level	I_{SS2}
E / F / G / H	"L": ON	Operate	Set value	I_{SS1} *1

***1**. Note that the IC's current consumption increases as much as current flows into the pull-up / pull-down resistor when; the ON / OFF pin is connected to the VIN pin in the A / C type, the ON / OFF pin is connected to the VSS pin in the E / G type (Refer to **Figure 21**).

(1) S-1135 Series A / C / E / G type

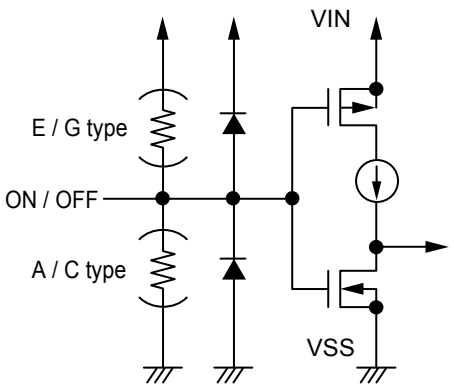

Figure 21

(2) S-1135 Series B / D / F / H type

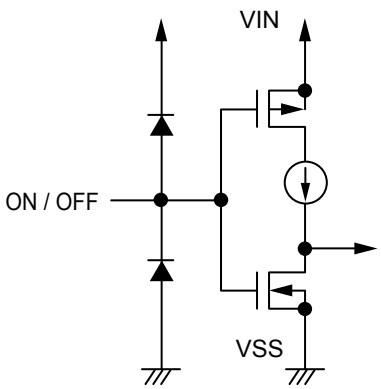

Figure 22

4. Discharge shunt function (S-1135 Series A / B / E / F type)

The S-1135 Series A / B / E / F type has a built-in discharge shunt circuit to discharge the output capacitance. When the ON / OFF pin is set to OFF level, turns the output transistor off, and turns the discharge shunt circuit on so that the output capacitor discharges. These types allow the VOUT pin to reach the V_{SS} level faster than the S-1135 Series C / D / G / H type that does not have a discharge shunt circuit.

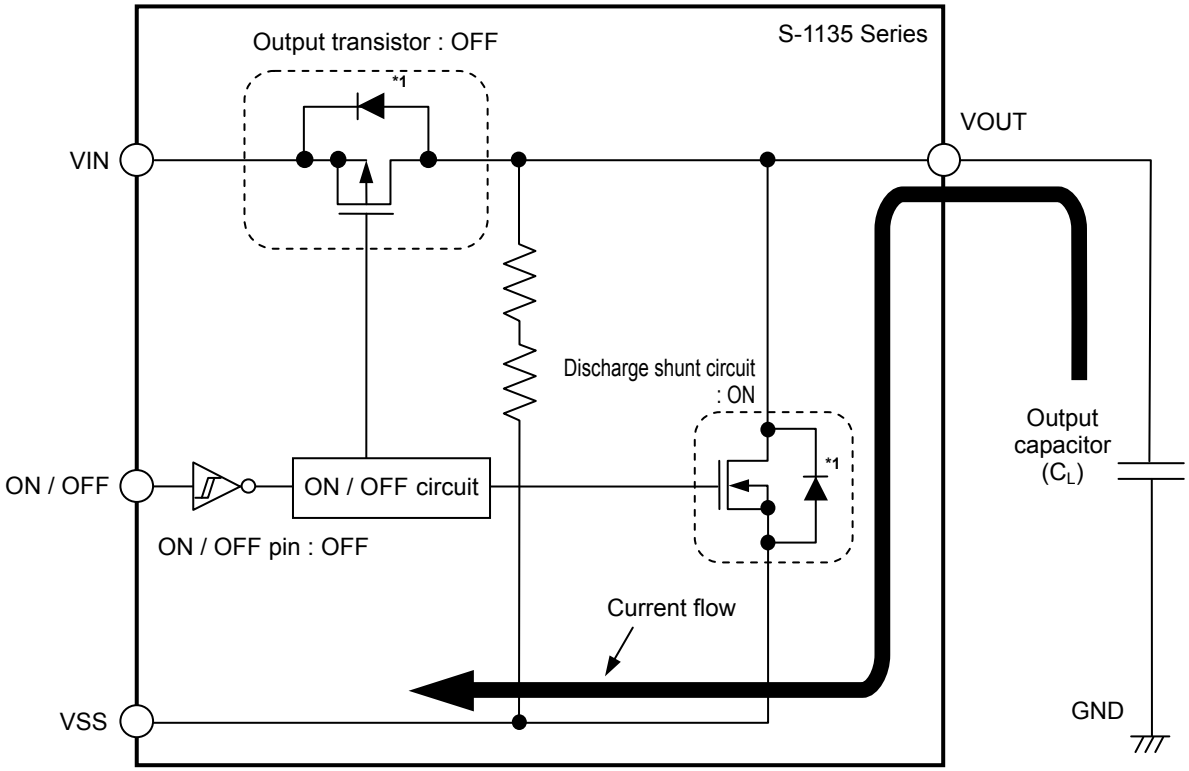

***1**. Parasitic diode

Figure 23

5. Overcurrent protection circuit

The S-1135 Series has an overcurrent protection circuit having the characteristics shown in "**1. Output Voltage vs. Output Current (When Load Current Increases) (Ta = 25°C)**" in "**■ Characteristics (Typical Data)**", in order to protect the output transistor against an excessive output current and short circuiting between the VOUT and VSS pins. The current when the output pin is short-circuited (I_{short}) is internally set at approx. 100 mA (typ.), and the normal value is restored for the output voltage, if releasing a short circuit once.

Caution This overcurrent protection circuit does not work as for thermal protection. If this IC long keeps short circuiting inside, pay attention to the conditions of input voltage and load current so that, under the usage conditions including short circuit, the loss of the IC will not exceed power dissipation of the package.

6. Pull-down / pull-up resistor (S-1135 Series A / C / E / G type)

In the S-1135 Series A / C / E / G type, the ON / OFF pin is internally pulled up to the VIN pin or pulled down to the VSS pin in the floating status, so the VOUT pin is set to the V_{SS} level.

Note that the IC's current consumption increases as much as current flows into the pull-up / pull-down resistor of 2.2 MΩ (typ.) when; the ON / OFF pin is connected to the VIN pin in the A / C type, the ON / OFF pin is connected to the VSS pin in the E / G type.

■ Precautions

- Wiring patterns for the VIN pin, the VOUT pin and GND should be designed so that the impedance is low. When mounting an output capacitor between the VOUT and VSS pins (C_L) and a capacitor for stabilizing the input between the VIN and VSS pins (C_{IN}), the distance from the capacitors to these pins should be as short as possible.
- Note that generally the output voltage may increase when a series regulator is used at low load current (1.0 mA or less).
- Note that generally the output voltage may increase due to the leakage current from an output driver when a series regulator is used at high temperature.
- Generally a series regulator may cause oscillation, depending on the selection of external parts. The following conditions are recommended for the S-1135 Series. However, be sure to perform sufficient evaluation under the actual usage conditions for selection, including evaluation of temperature characteristics. Refer to "**5. Example of Equivalent Series Resistance vs. Output Current Characteristics (Ta = 25°C)**" in "**■ Reference Data**" for the equivalent series resistance (R_{ESR}) of the output capacitor.

  Input capacitor (C_{IN}) : 1.0 μF or more
  Output capacitor (C_L) : 1.0 μF or more

- The voltage regulator may oscillate when the impedance of the power supply is high and the input capacitance is small or an input capacitor is not connected.
- If the output capacitance is small, power supply's fluctuation and the characteristics of load fluctuation become worse. Sufficiently evaluate the output voltage's fluctuation with the actual device.
- Overshoot may occur in the output voltage momentarily if the voltage is rapidly raised at power-on or when the power supply fluctuates. Sufficiently evaluate the output voltage at power-on with the actual device.
- The application conditions for the input voltage, the output voltage, and the load current should not exceed the package power dissipation.
- Do not apply an electrostatic discharge to this IC that exceeds the performance ratings of the built-in electrostatic protection circuit.
- In determining the output current, attention should be paid to the output current value specified in **Table 10** in "**■ Electrical Characteristics**" and footnote ***5** of the table.
- SII claims no responsibility for any disputes arising out of or in connection with any infringement by products including this IC of patents owned by a third party.

■ Characteristics (Typical Data)

1. Output Voltage vs. Output Current (When Load Current Increases) (Ta = 25°C)

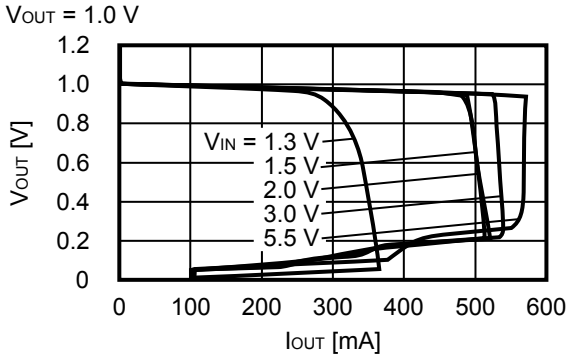

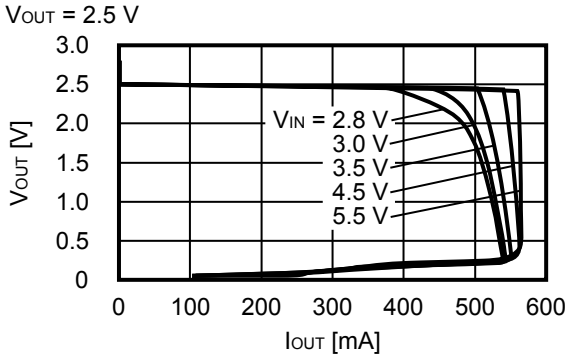

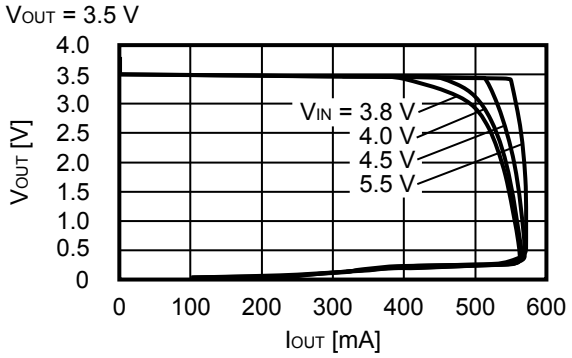

Remark In determining the output current, attention should be paid to the following.

1. The minimum output current value and footnote ***5** in **Table 10** in the "■ **Electrical Characteristics**"
2. The package power dissipation

2. Output Voltage vs. Input Voltage (Ta = 25°C)

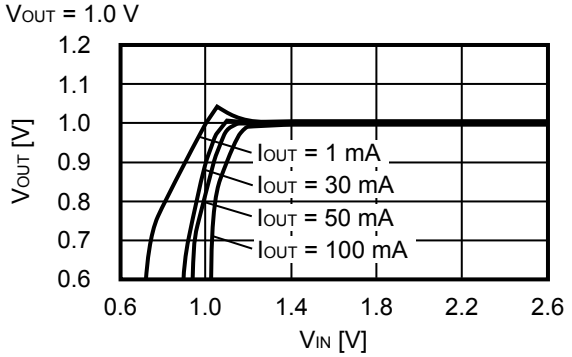

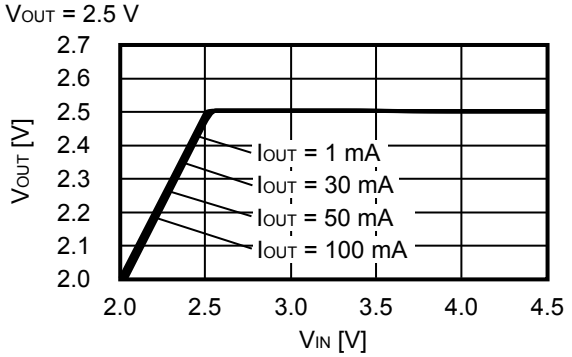

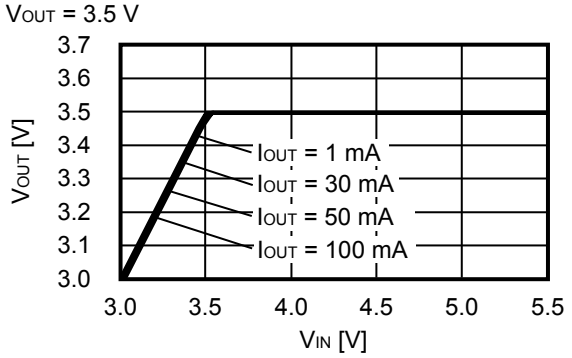

3. Dropout Voltage vs. Output Current

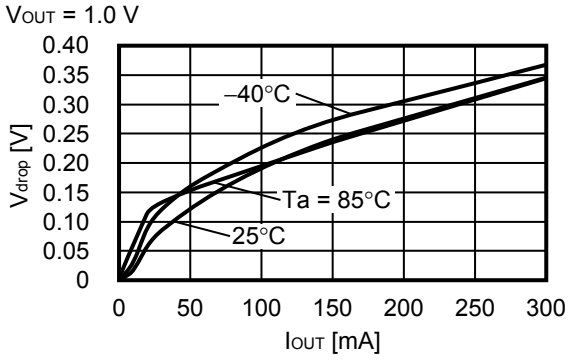

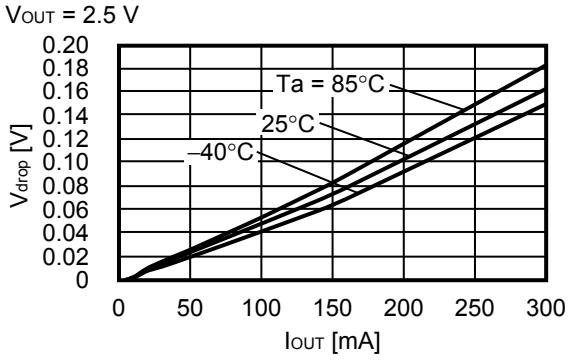

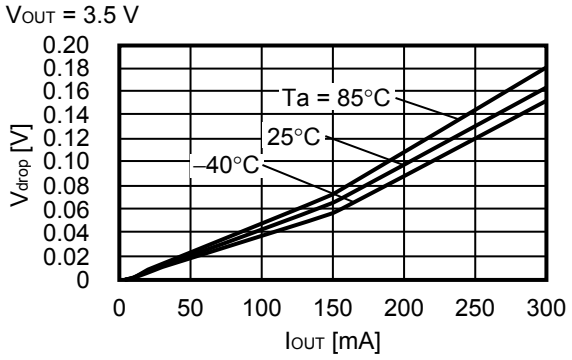

4. Dropout Voltage vs. Set Output Voltage

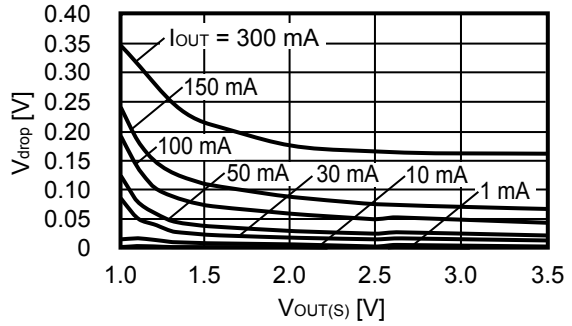

5. Output Voltage vs. Ambient Temperature

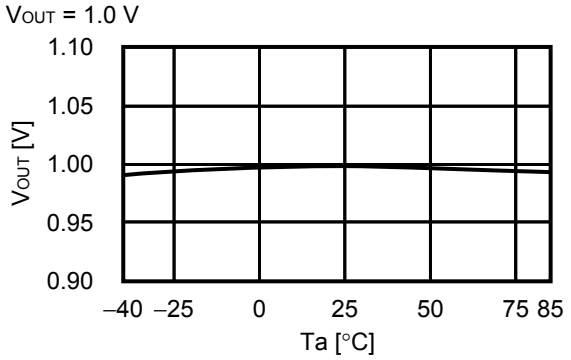

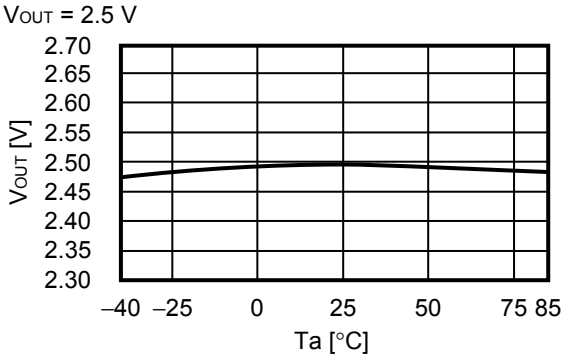

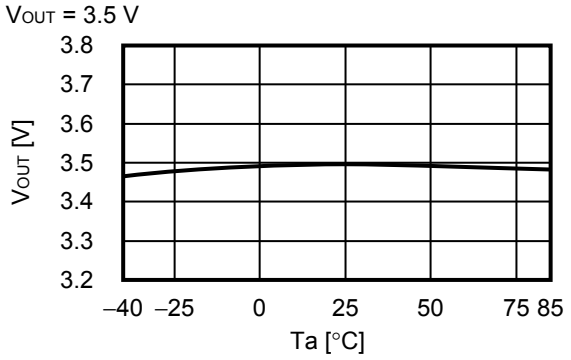

6. Current Consumption vs. Input Voltage

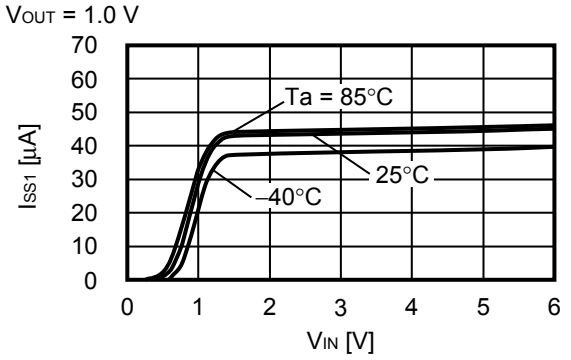

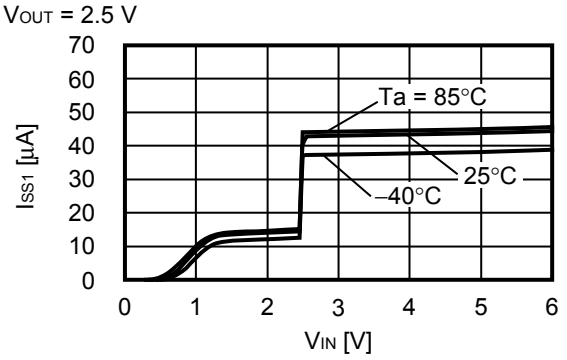

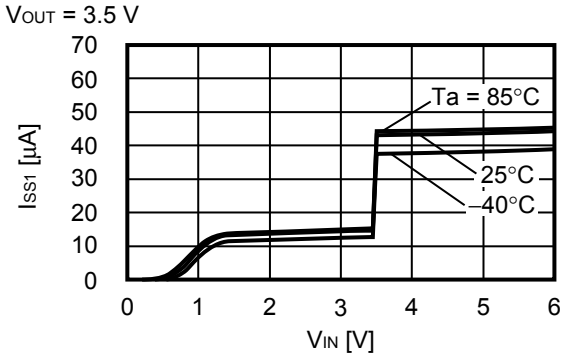

7. Ripple Rejection (Ta = 25°C)

V_{OUT} = 1.0 V

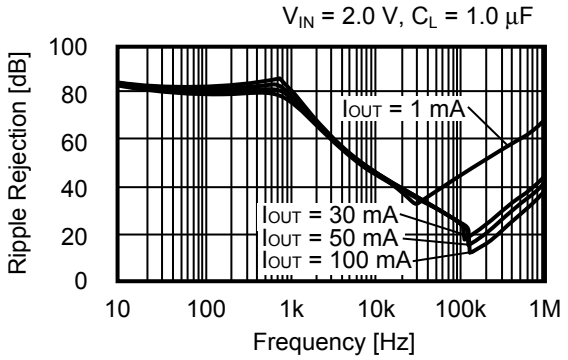

V_{OUT} = 2.5 V

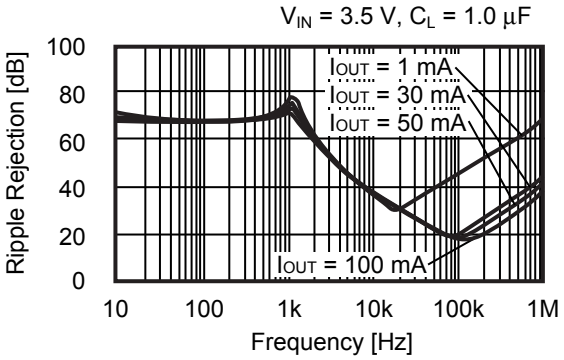

V_{OUT} = 3.5 V

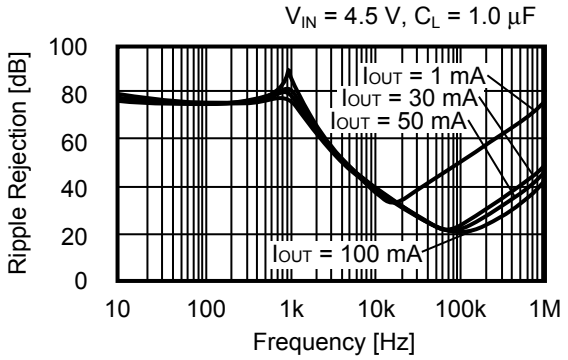

■ Reference Data

1. Transient Response Characteristics when Input (Ta = 25°C)

V_{OUT} = 1.0 V
I_{OUT} = 100 mA, $t_r = t_f$ = 5.0 μs, C_L = 1.0 μF

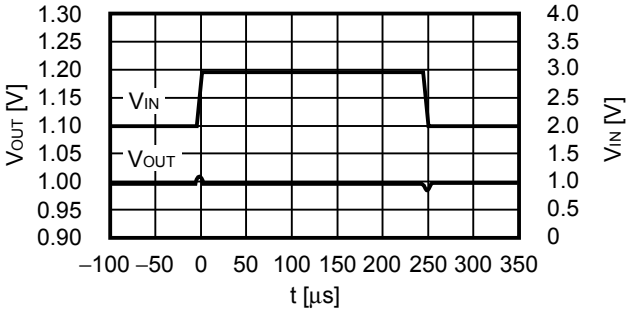

V_{OUT} = 2.5 V
I_{OUT} = 100 mA, $t_r = t_f$ = 5.0 μs, C_L = 1.0 μF

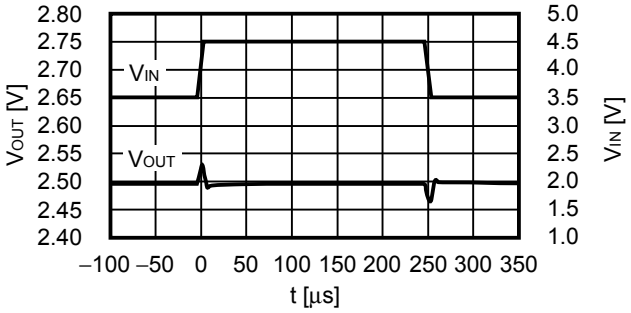

V_{OUT} = 3.5 V
I_{OUT} = 100 mA, $t_r = t_f$ = 5.0 μs, C_L = 1.0 μF

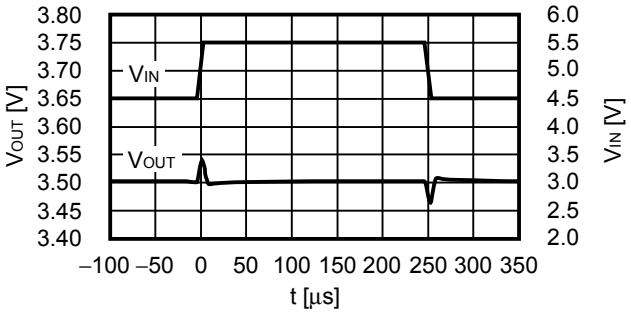

2. Transient Response Characteristics of Load (Ta = 25°C)

V_{OUT} = 1.0 V
V_{IN} = 2.0 V, C_L = 1.0 μF, C_{IN} = 1.0 μF, I_{OUT} = 50 mA ↔ 100 mA

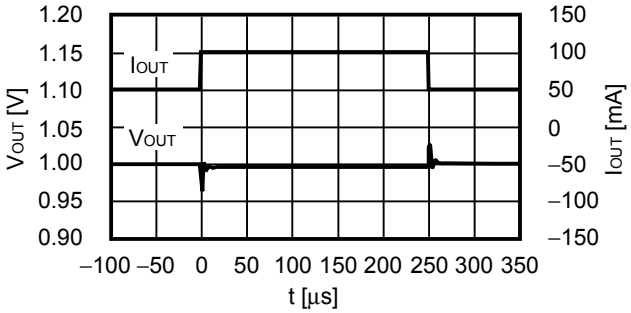

V_{OUT} = 2.5 V
V_{IN} = 3.5 V, C_L = 1.0 μF, C_{IN} = 1.0 μF, I_{OUT} = 50 mA ↔ 100 mA

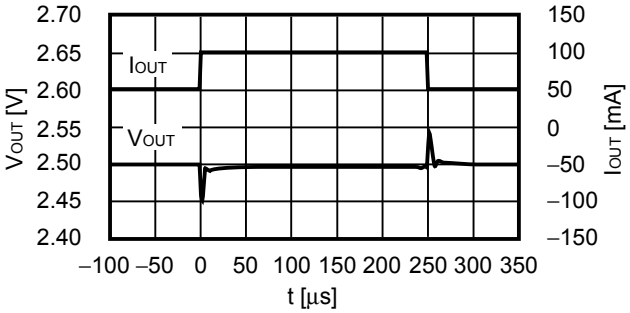

V_{OUT} = 3.5 V
V_{IN} = 4.5 V, C_L = 1.0 μF, C_{IN} = 1.0 μF, I_{OUT} = 50 mA ↔ 100 mA

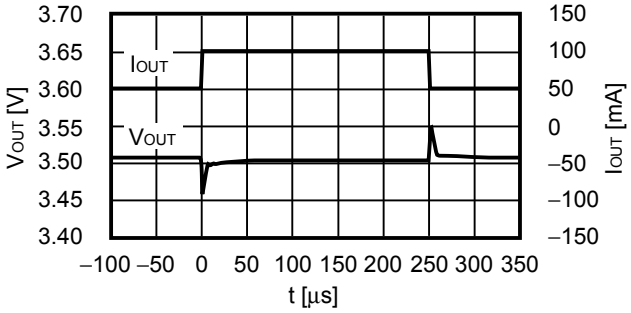

3. Transient Response Characteristics of ON / OFF Pin (Ta = 25°C)

V_{OUT} = 1.0 V
V_{IN} = 2.0 V, t_r = 5.0 μs, C_L = 1.0 μF, C_{IN} = 1.0 μF, I_{OUT} = 100 mA

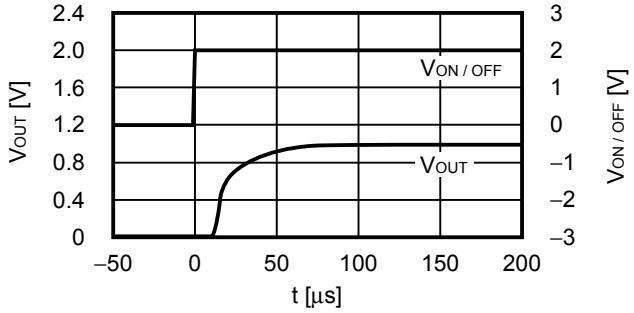

V_{OUT} = 2.5 V
V_{IN} = 3.5 V, t_r = 5.0 μs, C_L = 1.0 μF, C_{IN} = 1.0 μF, I_{OUT} = 100 mA

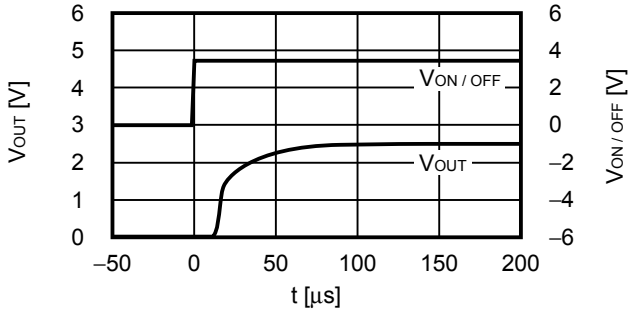

V_{OUT} = 3.5 V
V_{IN} = 4.5 V, t_r = 5.0 μs, C_L = 1.0 μF, C_{IN} = 1.0 μF, I_{OUT} = 100 mA

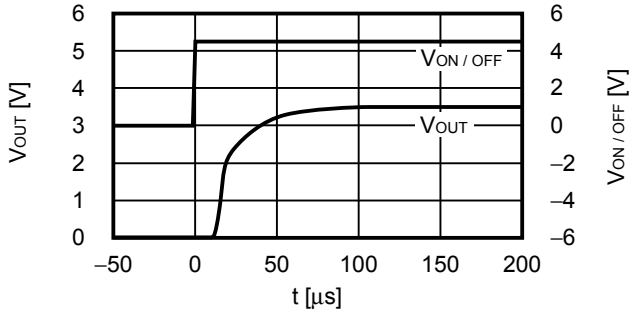

4. Output Capacitance vs. Characteristics of Discharge Time (Ta = 25°C)
S-1135 Series A / B type (with discharge shunt function)

V_{IN} = V_{OUT} + 1.0 V, I_{OUT} = no load
$V_{ON/OFF}$ = V_{OUT} + 1.0 V → V_{SS}, t_f = 1 μs

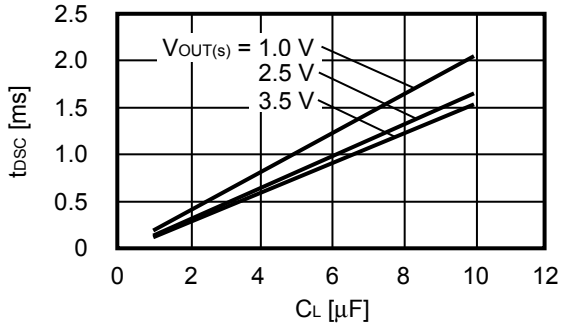

Figure 24

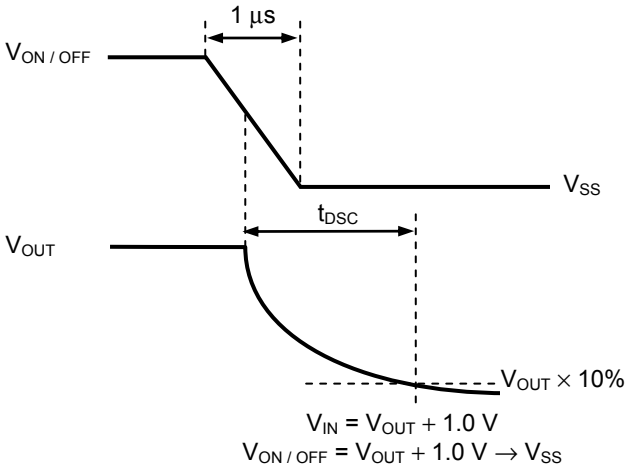

Figure 25 Measurement Condition of Discharge Time

5. Example of Equivalent Series Resistance vs. Output Current Characteristics (Ta = 25°C)

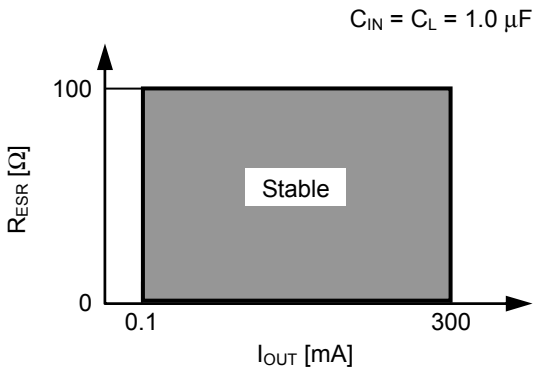

Figure 26

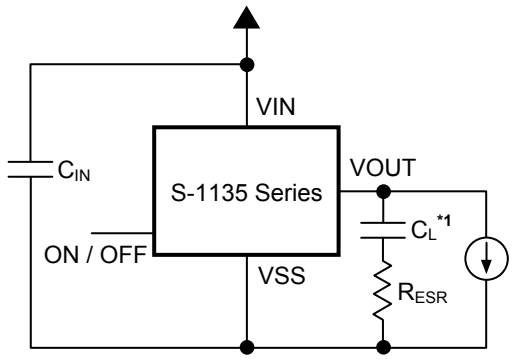

***1.** C_L : TAIYO YUDEN TMK316BJ105KD (1.0 μF)

Figure 27

■ Marking Specifications

1. SOT-89-5

Top view

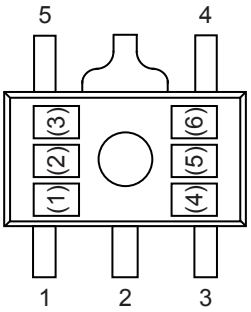

(1) to (3) : Product code (Refer to **Product name vs. Product code**)
(4) to (6) : Lot number

Product name vs. Product code

(a) S-1135 Series A type

Product Name	Product code		
	(1)	(2)	(3)
S-1135A10-U5T1x	S	E	A
S-1135A11-U5T1x	S	E	B
S-1135A12-U5T1x	S	E	C
S-1135A13-U5T1x	S	E	D
S-1135A14-U5T1x	S	E	E
S-1135A15-U5T1x	S	E	F
S-1135A16-U5T1x	S	E	G
S-1135A17-U5T1x	S	E	H
S-1135A18-U5T1x	S	E	I
S-1135A1J-U5T1x	S	E	J
S-1135A19-U5T1x	S	E	K
S-1135A20-U5T1x	S	E	L
S-1135A21-U5T1x	S	E	M
S-1135A22-U5T1x	S	E	N
S-1135A23-U5T1x	S	E	O
S-1135A24-U5T1x	S	E	P
S-1135A25-U5T1x	S	E	Q
S-1135A26-U5T1x	S	E	R
S-1135A27-U5T1x	S	E	S
S-1135A28-U5T1x	S	E	T
S-1135A2J-U5T1x	S	E	U
S-1135A29-U5T1x	S	E	V
S-1135A30-U5T1x	S	E	W
S-1135A31-U5T1x	S	E	X
S-1135A32-U5T1x	S	E	Y
S-1135A33-U5T1x	S	E	Z
S-1135A34-U5T1x	S	E	2
S-1135A10-U5T1x	S	E	3

(b) S-1135 Series B type

Product Name	Product code		
	(1)	(2)	(3)
S-1135B10-U5T1x	S	G	A
S-1135B11-U5T1x	S	G	B
S-1135B12-U5T1x	S	G	C
S-1135B13-U5T1x	S	G	D
S-1135B14-U5T1x	S	G	E
S-1135B15-U5T1x	S	G	F
S-1135B16-U5T1x	S	G	G
S-1135B17-U5T1x	S	G	H
S-1135B18-U5T1x	S	G	I
S-1135B1J-U5T1x	S	G	J
S-1135B19-U5T1x	S	G	K
S-1135B20-U5T1x	S	G	L
S-1135B21-U5T1x	S	G	M
S-1135B22-U5T1x	S	G	N
S-1135B23-U5T1x	S	G	O
S-1135B24-U5T1x	S	G	P
S-1135B25-U5T1x	S	G	Q
S-1135B26-U5T1x	S	G	R
S-1135B27-U5T1x	S	G	S
S-1135B28-U5T1x	S	G	T
S-1135B2J-U5T1x	S	G	U
S-1135B29-U5T1x	S	G	V
S-1135B30-U5T1x	S	G	W
S-1135B31-U5T1x	S	G	X
S-1135B32-U5T1x	S	G	Y
S-1135B33-U5T1x	S	G	Z
S-1135B34-U5T1x	S	G	2
S-1135B35-U5T1x	S	G	3

Remark 1. x: G or U
2. Please select products of environmental code = U for Sn 100%, halogen-free products.

(c) S-1135 Series C type

Product Name	Product code		
	(1)	(2)	(3)
S-1135C10-U5T1x	V	A	A
S-1135C11-U5T1x	V	A	B
S-1135C12-U5T1x	V	A	C
S-1135C13-U5T1x	V	A	D
S-1135C14-U5T1x	V	A	E
S-1135C15-U5T1x	V	A	F
S-1135C16-U5T1x	V	A	G
S-1135C17-U5T1x	V	A	H
S-1135C18-U5T1x	V	A	I
S-1135C1J-U5T1x	V	A	J
S-1135C19-U5T1x	V	A	K
S-1135C20-U5T1x	V	A	L
S-1135C21-U5T1x	V	A	M
S-1135C22-U5T1x	V	A	N
S-1135C23-U5T1x	V	A	O
S-1135C24-U5T1x	V	A	P
S-1135C25-U5T1x	V	A	Q
S-1135C26-U5T1x	V	A	R
S-1135C27-U5T1x	V	A	S
S-1135C28-U5T1x	V	A	T
S-1135C2J-U5T1x	V	A	U
S-1135C29-U5T1x	V	A	V
S-1135C30-U5T1x	V	A	W
S-1135C31-U5T1x	V	A	X
S-1135C32-U5T1x	V	A	Y
S-1135C33-U5T1x	V	A	Z
S-1135C34-U5T1x	V	A	2
S-1135C35-U5T1x	V	A	3

(d) S-1135 Series D type

Product Name	Product code		
	(1)	(2)	(3)
S-1135D10-U5T1x	V	B	A
S-1135D11-U5T1x	V	B	B
S-1135D12-U5T1x	V	B	C
S-1135D13-U5T1x	V	B	D
S-1135D14-U5T1x	V	B	E
S-1135D15-U5T1x	V	B	F
S-1135D16-U5T1x	V	B	G
S-1135D17-U5T1x	V	B	H
S-1135D18-U5T1x	V	B	I
S-1135D1J-U5T1x	V	B	J
S-1135D19-U5T1x	V	B	K
S-1135D20-U5T1x	V	B	L
S-1135D21-U5T1x	V	B	M
S-1135D22-U5T1x	V	B	N
S-1135D23-U5T1x	V	B	O
S-1135D24-U5T1x	V	B	P
S-1135D25-U5T1x	V	B	Q
S-1135D26-U5T1x	V	B	R
S-1135D27-U5T1x	V	B	S
S-1135D28-U5T1x	V	B	T
S-1135D2J-U5T1x	V	B	U
S-1135D29-U5T1x	V	B	V
S-1135D30-U5T1x	V	B	W
S-1135D31-U5T1x	V	B	X
S-1135D32-U5T1x	V	B	Y
S-1135D33-U5T1x	V	B	Z
S-1135D34-U5T1x	V	B	2
S-1135D35-U5T1x	V	B	3

Remark 1. x: G or U
2. Please select products of environmental code = U for Sn 100%, halogen-free products.

2. SOT-23-5

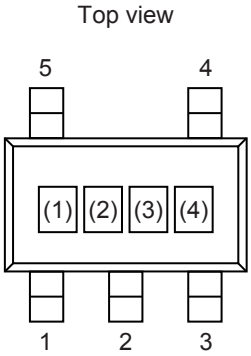

(1) to (3) : Product code (Refer to **Product name vs. Product code**)
(4) : Lot number

Product name vs. Product code

(a) S-1135 Series A type

Product Name	Product code		
	(1)	(2)	(3)
S-1135A10-M5T1y	S	E	A
S-1135A11-M5T1y	S	E	B
S-1135A12-M5T1y	S	E	C
S-1135A13-M5T1y	S	E	D
S-1135A14-M5T1y	S	E	E
S-1135A15-M5T1y	S	E	F
S-1135A16-M5T1y	S	E	G
S-1135A17-M5T1y	S	E	H
S-1135A18-M5T1y	S	E	I
S-1135A1J-M5T1y	S	E	J
S-1135A19-M5T1y	S	E	K
S-1135A20-M5T1y	S	E	L
S-1135A21-M5T1y	S	E	M
S-1135A22-M5T1y	S	E	N
S-1135A23-M5T1y	S	E	O
S-1135A24-M5T1y	S	E	P
S-1135A25-M5T1y	S	E	Q
S-1135A26-M5T1y	S	E	R
S-1135A27-M5T1y	S	E	S
S-1135A28-M5T1y	S	E	T
S-1135A2J-M5T1y	S	E	U
S-1135A29-M5T1y	S	E	V
S-1135A30-M5T1y	S	E	W
S-1135A31-M5T1y	S	E	X
S-1135A32-M5T1y	S	E	Y
S-1135A33-M5T1y	S	E	Z
S-1135A34-M5T1y	S	E	2
S-1135A35-M5T1y	S	E	3

(b) S-1135 Series B type

Product Name	Product code		
	(1)	(2)	(3)
S-1135B10-M5T1y	S	G	A
S-1135B11-M5T1y	S	G	B
S-1135B12-M5T1y	S	G	C
S-1135B13-M5T1y	S	G	D
S-1135B14-M5T1y	S	G	E
S-1135B15-M5T1y	S	G	F
S-1135B16-M5T1y	S	G	G
S-1135B17-M5T1y	S	G	H
S-1135B18-M5T1y	S	G	I
S-1135B1J-M5T1y	S	G	J
S-1135B19-M5T1y	S	G	K
S-1135B20-M5T1y	S	G	L
S-1135B21-M5T1y	S	G	M
S-1135B22-M5T1y	S	G	N
S-1135B23-M5T1y	S	G	O
S-1135B24-M5T1y	S	G	P
S-1135B25-M5T1y	S	G	Q
S-1135B26-M5T1y	S	G	R
S-1135B27-M5T1y	S	G	S
S-1135B28-M5T1y	S	G	T
S-1135B2J-M5T1y	S	G	U
S-1135B29-M5T1y	S	G	V
S-1135B30-M5T1y	S	G	W
S-1135B31-M5T1y	S	G	X
S-1135B32-M5T1y	S	G	Y
S-1135B33-M5T1y	S	G	Z
S-1135B34-M5T1y	S	G	2
S-1135B35-M5T1y	S	G	3

Remark 1. y: S or U
2. Please select products of environmental code = U for Sn 100%, halogen-free products.

(c) S-1135 Series C type

Product Name	Product code		
	(1)	(2)	(3)
S-1135C10-M5T1y	V	A	A
S-1135C11-M5T1y	V	A	B
S-1135C12-M5T1y	V	A	C
S-1135C13-M5T1y	V	A	D
S-1135C14-M5T1y	V	A	E
S-1135C15-M5T1y	V	A	F
S-1135C16-M5T1y	V	A	G
S-1135C17-M5T1y	V	A	H
S-1135C18-M5T1y	V	A	I
S-1135C1J-M5T1y	V	A	J
S-1135C19-M5T1y	V	A	K
S-1135C20-M5T1y	V	A	L
S-1135C21-M5T1y	V	A	M
S-1135C22-M5T1y	V	A	N
S-1135C23-M5T1y	V	A	O
S-1135C24-M5T1y	V	A	P
S-1135C25-M5T1y	V	A	Q
S-1135C26-M5T1y	V	A	R
S-1135C27-M5T1y	V	A	S
S-1135C28-M5T1y	V	A	T
S-1135C2J-M5T1y	V	A	U
S-1135C29-M5T1y	V	A	V
S-1135C30-M5T1y	V	A	W
S-1135C31-M5T1y	V	A	X
S-1135C32-M5T1y	V	A	Y
S-1135C33-M5T1y	V	A	Z
S-1135C34-M5T1y	V	A	2
S-1135C35-M5T1y	V	A	3

(d) S-1135 Series D type

Product Name	Product code		
	(1)	(2)	(3)
S-1135D10-M5T1y	V	B	A
S-1135D11-M5T1y	V	B	B
S-1135D12-M5T1y	V	B	C
S-1135D13-M5T1y	V	B	D
S-1135D14-M5T1y	V	B	E
S-1135D15-M5T1y	V	B	F
S-1135D16-M5T1y	V	B	G
S-1135D17-M5T1y	V	B	H
S-1135D18-M5T1y	V	B	I
S-1135D1J-M5T1y	V	B	J
S-1135D19-M5T1y	V	B	K
S-1135D20-M5T1y	V	B	L
S-1135D21-M5T1y	V	B	M
S-1135D22-M5T1y	V	B	N
S-1135D23-M5T1y	V	B	O
S-1135D24-M5T1y	V	B	P
S-1135D25-M5T1y	V	B	Q
S-1135D26-M5T1y	V	B	R
S-1135D27-M5T1y	V	B	S
S-1135D28-M5T1y	V	B	T
S-1135D2J-M5T1y	V	B	U
S-1135D29-M5T1y	V	B	V
S-1135D30-M5T1y	V	B	W
S-1135D31-M5T1y	V	B	X
S-1135D32-M5T1y	V	B	Y
S-1135D33-M5T1y	V	B	Z
S-1135D34-M5T1y	V	B	2
S-1135D35-M5T1y	V	B	3

Remark 1. y: S or U
2. Please select products of environmental code = U for Sn 100%, halogen-free products.

3. HSNT-6A

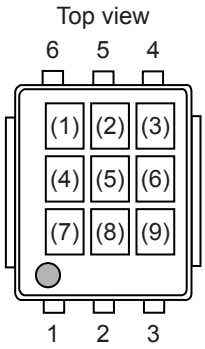

(1) to (3) : Product code (Refer to **Product name vs. Product code**)
(4) : Blank
(5) to (9) : Lot number

Product name vs. Product code

(a) S-1135 Series A type

Product Name	Product code		
	(1)	(2)	(3)
S-1135A10-A6T1U	S	E	A
S-1135A11-A6T1U	S	E	B
S-1135A12-A6T1U	S	E	C
S-1135A13-A6T1U	S	E	D
S-1135A14-A6T1U	S	E	E
S-1135A15-A6T1U	S	E	F
S-1135A16-A6T1U	S	E	G
S-1135A17-A6T1U	S	E	H
S-1135A18-A6T1U	S	E	I
S-1135A1J-A6T1U	S	E	J
S-1135A19-A6T1U	S	E	K
S-1135A20-A6T1U	S	E	L
S-1135A21-A6T1U	S	E	M
S-1135A22-A6T1U	S	E	N
S-1135A23-A6T1U	S	E	O
S-1135A24-A6T1U	S	E	P
S-1135A25-A6T1U	S	E	Q
S-1135A26-A6T1U	S	E	R
S-1135A27-A6T1U	S	E	S
S-1135A28-A6T1U	S	E	T
S-1135A2J-A6T1U	S	E	U
S-1135A29-A6T1U	S	E	V
S-1135A30-A6T1U	S	E	W
S-1135A31-A6T1U	S	E	X
S-1135A32-A6T1U	S	E	Y
S-1135A33-A6T1U	S	E	Z
S-1135A34-A6T1U	S	E	2
S-1135A35-A6T1U	S	E	3

(b) S-1135 Series B type

Product Name	Product code		
	(1)	(2)	(3)
S-1135B10-A6T1U	S	G	A
S-1135B11-A6T1U	S	G	B
S-1135B12-A6T1U	S	G	C
S-1135B13-A6T1U	S	G	D
S-1135B14-A6T1U	S	G	E
S-1135B15-A6T1U	S	G	F
S-1135B16-A6T1U	S	G	G
S-1135B17-A6T1U	S	G	H
S-1135B18-A6T1U	S	G	I
S-1135B1J-A6T1U	S	G	J
S-1135B19-A6T1U	S	G	K
S-1135B20-A6T1U	S	G	L
S-1135B21-A6T1U	S	G	M
S-1135B22-A6T1U	S	G	N
S-1135B23-A6T1U	S	G	O
S-1135B24-A6T1U	S	G	P
S-1135B25-A6T1U	S	G	Q
S-1135B26-A6T1U	S	G	R
S-1135B27-A6T1U	S	G	S
S-1135B28-A6T1U	S	G	T
S-1135B2J-A6T1U	S	G	U
S-1135B29-A6T1U	S	G	V
S-1135B30-A6T1U	S	G	W
S-1135B31-A6T1U	S	G	X
S-1135B32-A6T1U	S	G	Y
S-1135B33-A6T1U	S	G	Z
S-1135B34-A6T1U	S	G	2
S-1135B35-A6T1U	S	G	3

(c) S-1135 Series C type

Product Name	Product code		
	(1)	(2)	(3)
S-1135C10-A6T1U	V	A	A
S-1135C11-A6T1U	V	A	B
S-1135C12-A6T1U	V	A	C
S-1135C13-A6T1U	V	A	D
S-1135C14-A6T1U	V	A	E
S-1135C15-A6T1U	V	A	F
S-1135C16-A6T1U	V	A	G
S-1135C17-A6T1U	V	A	H
S-1135C18-A6T1U	V	A	I
S-1135C1J-A6T1U	V	A	J
S-1135C19-A6T1U	V	A	K
S-1135C20-A6T1U	V	A	L
S-1135C21-A6T1U	V	A	M
S-1135C22-A6T1U	V	A	N
S-1135C23-A6T1U	V	A	O
S-1135C24-A6T1U	V	A	P
S-1135C25-A6T1U	V	A	Q
S-1135C26-A6T1U	V	A	R
S-1135C27-A6T1U	V	A	S
S-1135C28-A6T1U	V	A	T
S-1135C2J-A6T1U	V	A	U
S-1135C29-A6T1U	V	A	V
S-1135C30-A6T1U	V	A	W
S-1135C31-A6T1U	V	A	X
S-1135C32-A6T1U	V	A	Y
S-1135C33-A6T1U	V	A	Z
S-1135C34-A6T1U	V	A	2
S-1135C35-A6T1U	V	A	3

(d) S-1135 Series D type

Product Name	Product code		
	(1)	(2)	(3)
S-1135D10-A6T1U	V	B	A
S-1135D11-A6T1U	V	B	B
S-1135D12-A6T1U	V	B	C
S-1135D13-A6T1U	V	B	D
S-1135D14-A6T1U	V	B	E
S-1135D15-A6T1U	V	B	F
S-1135D16-A6T1U	V	B	G
S-1135D17-A6T1U	V	B	H
S-1135D18-A6T1U	V	B	I
S-1135D1J-A6T1U	V	B	J
S-1135D19-A6T1U	V	B	K
S-1135D20-A6T1U	V	B	L
S-1135D21-A6T1U	V	B	M
S-1135D22-A6T1U	V	B	N
S-1135D23-A6T1U	V	B	O
S-1135D24-A6T1U	V	B	P
S-1135D25-A6T1U	V	B	Q
S-1135D26-A6T1U	V	B	R
S-1135D27-A6T1U	V	B	S
S-1135D28-A6T1U	V	B	T
S-1135D2J-A6T1U	V	B	U
S-1135D29-A6T1U	V	B	V
S-1135D30-A6T1U	V	B	W
S-1135D31-A6T1U	V	B	X
S-1135D32-A6T1U	V	B	Y
S-1135D33-A6T1U	V	B	Z
S-1135D34-A6T1U	V	B	2
S-1135D35-A6T1U	V	B	3

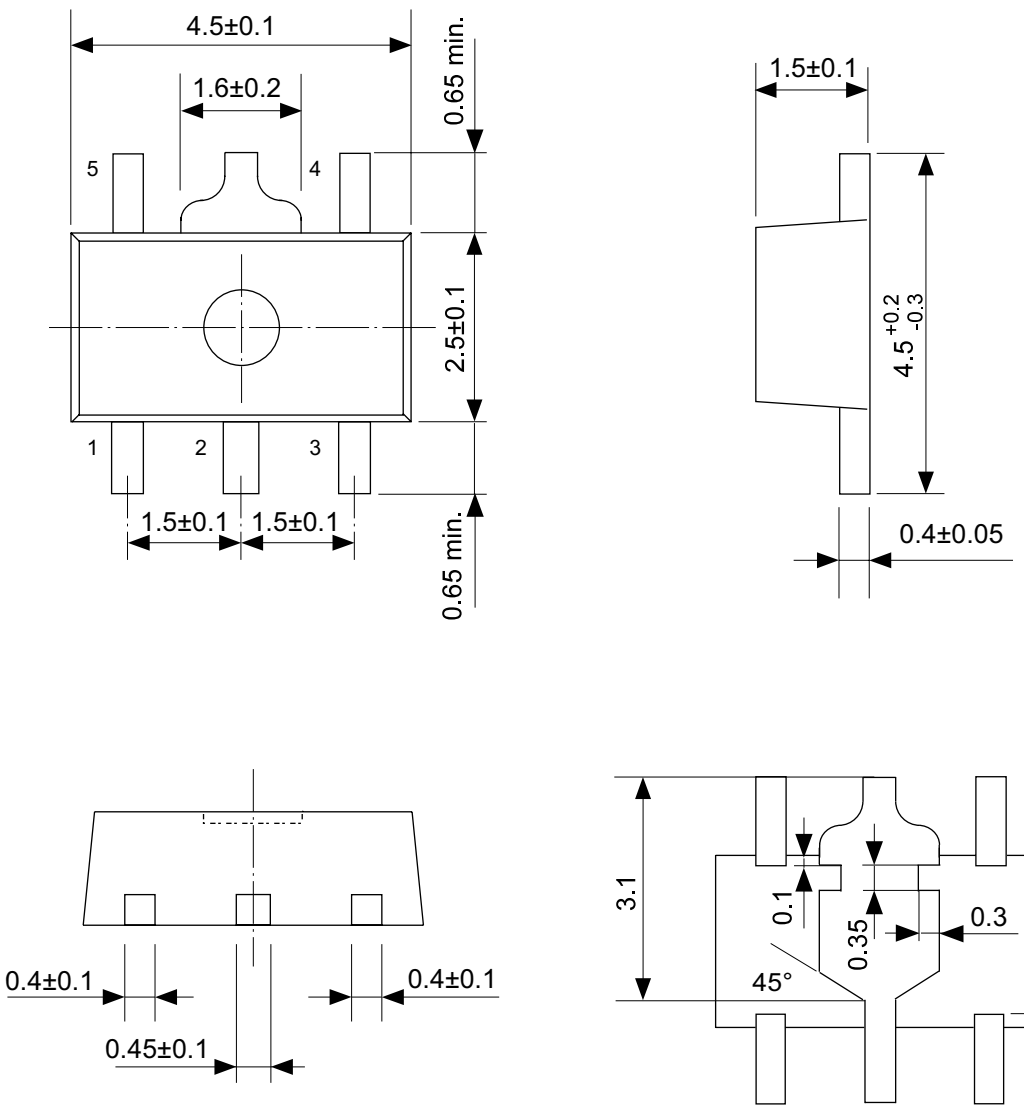

No. UP005-A-P-SD-1.1

TITLE	SOT895-A-PKG Dimensions
No.	UP005-A-P-SD-1.1
SCALE	
UNIT	mm
Seiko Instruments Inc.	

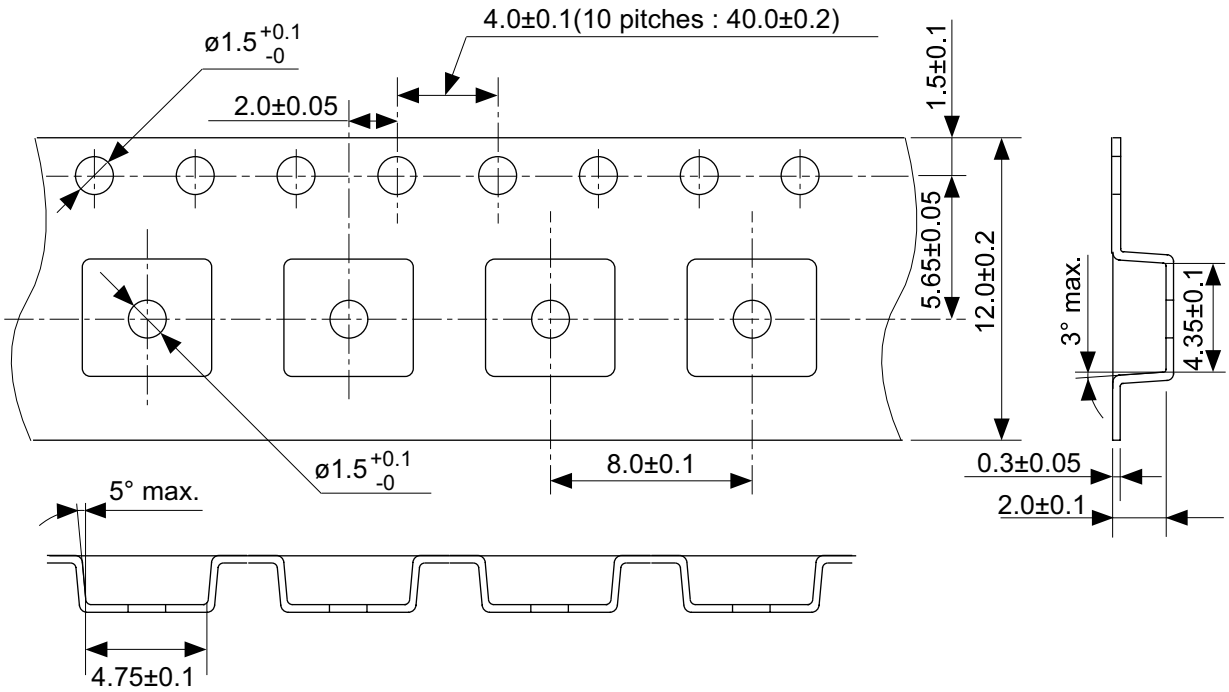

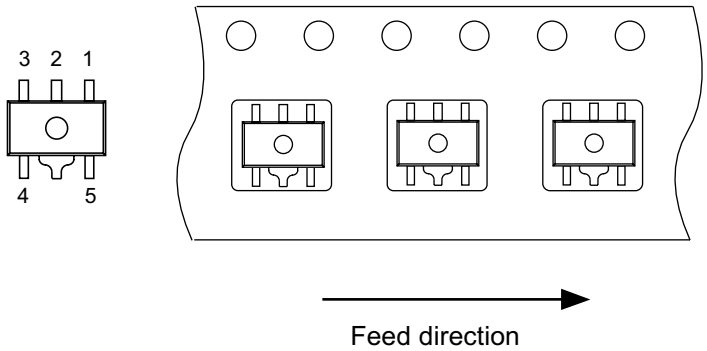

No. UP005-A-C-SD-1.1

TITLE	SOT895-A-Carrier Tape
No.	UP005-A-C-SD-1.1
SCALE	
UNIT	mm
Seiko Instruments Inc.	

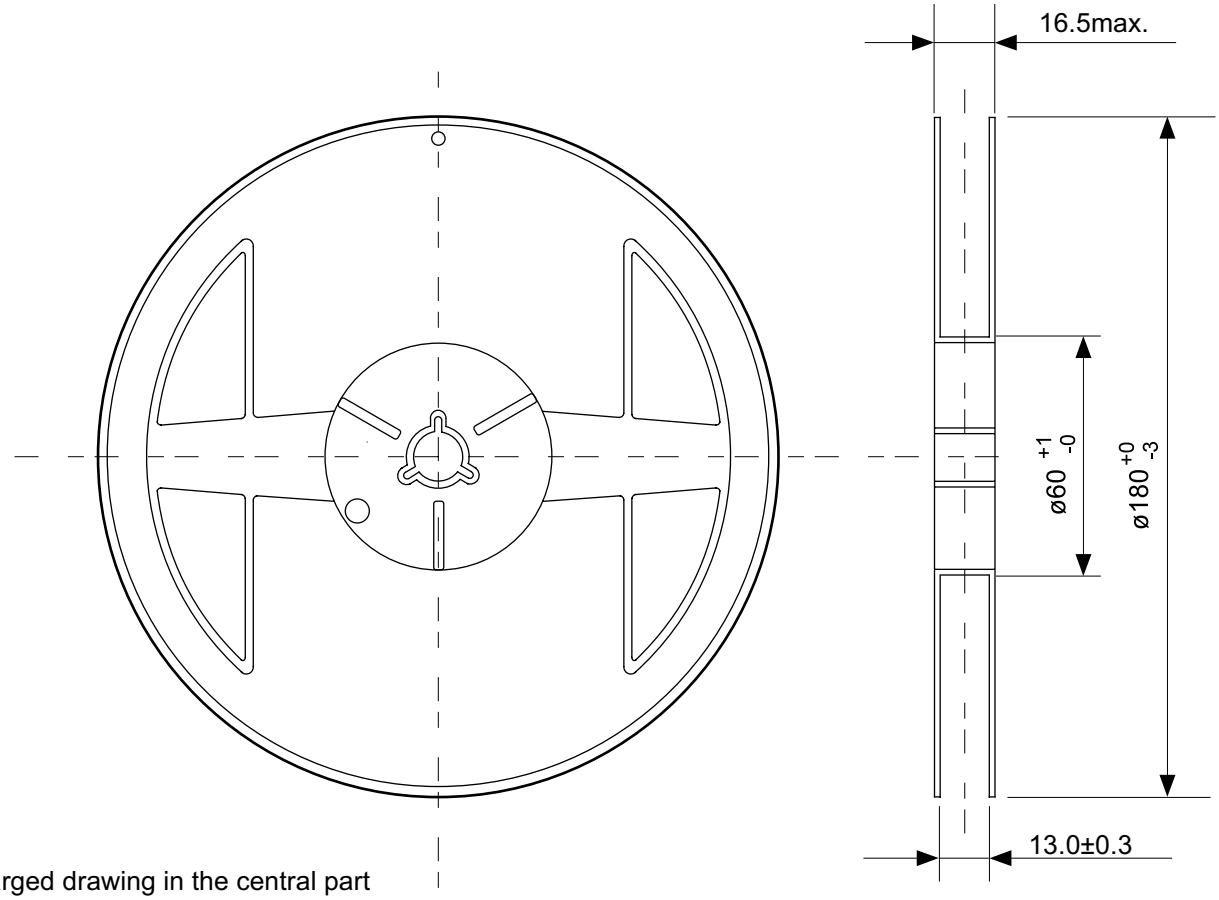

Enlarged drawing in the central part

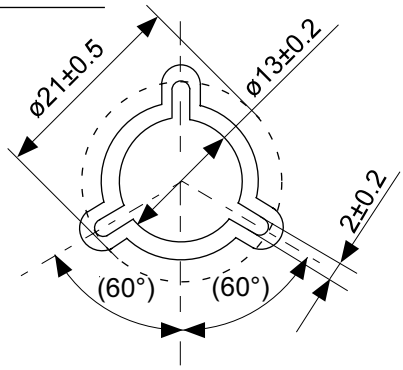

No. UP005-A-R-SD-1.1

TITLE	SOT895-A-Reel		
No.	UP005-A-R-SD-1.1		
SCALE		QTY.	1,000
UNIT	mm		
Seiko Instruments Inc.			

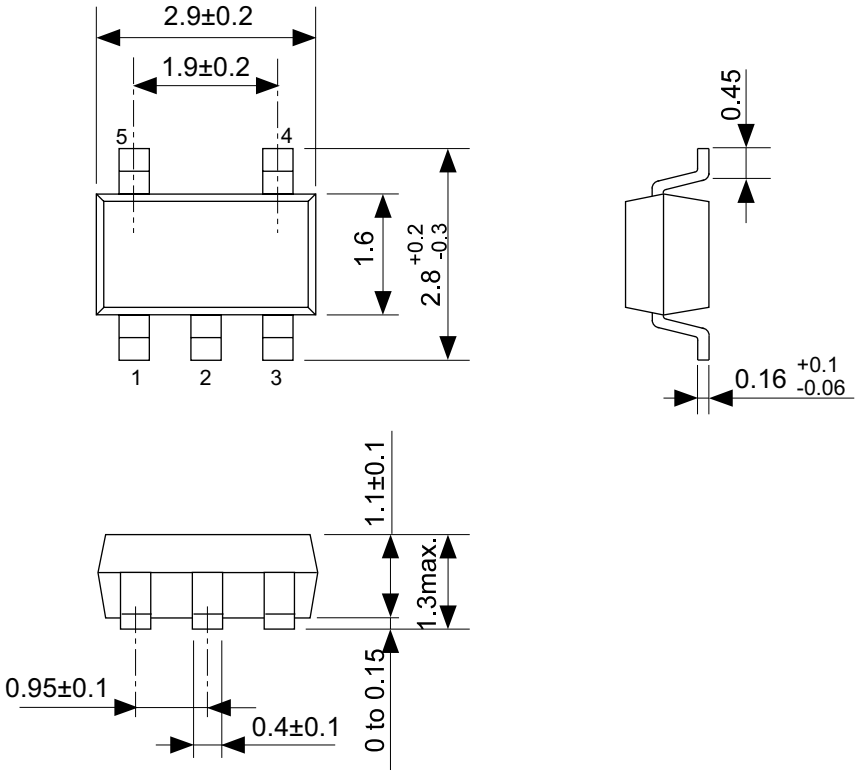

No. MP005-A-P-SD-1.2

TITLE	SOT235-A-PKG Dimensions
No.	MP005-A-P-SD-1.2
SCALE	
UNIT	mm
Seiko Instruments Inc.	

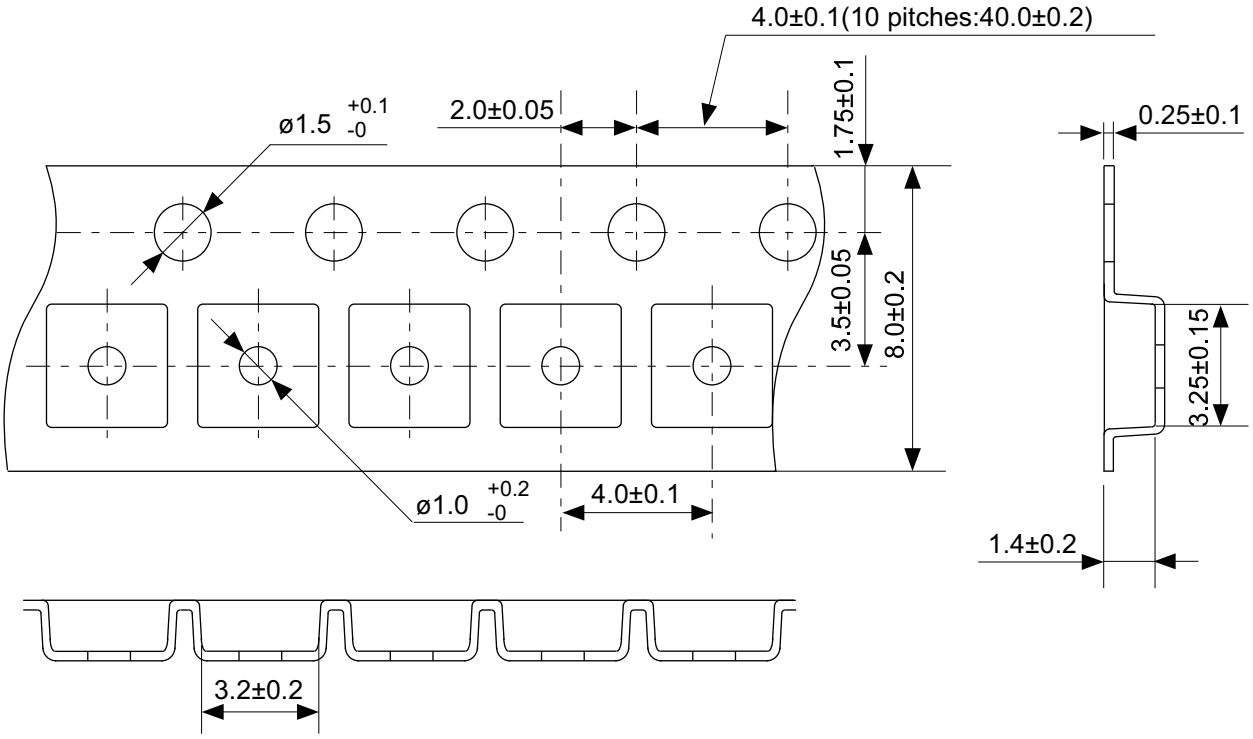

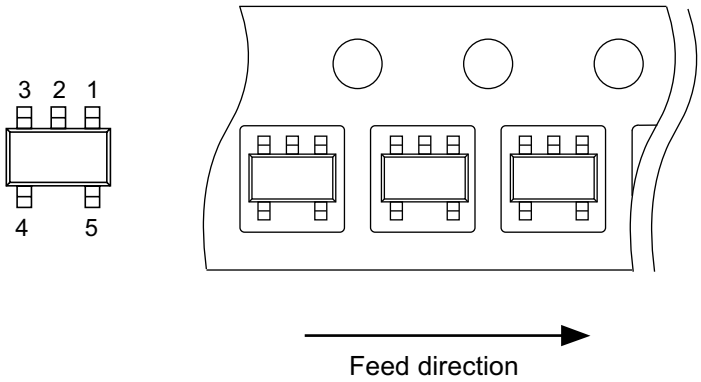

No. MP005-A-C-SD-2.1

TITLE	SOT235-A-Carrier Tape
No.	MP005-A-C-SD-2.1
SCALE	
UNIT	mm
Seiko Instruments Inc.	

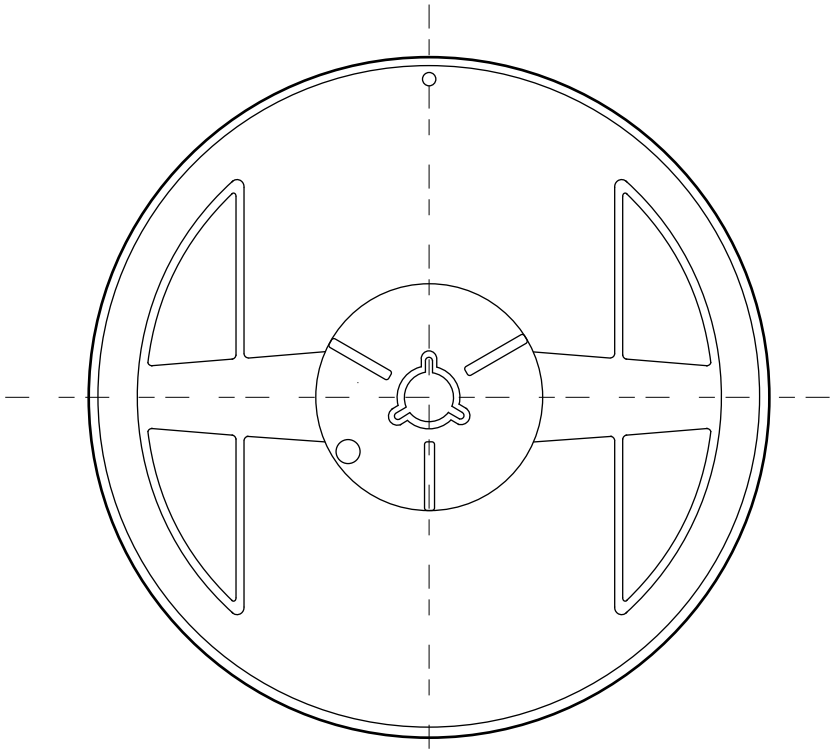

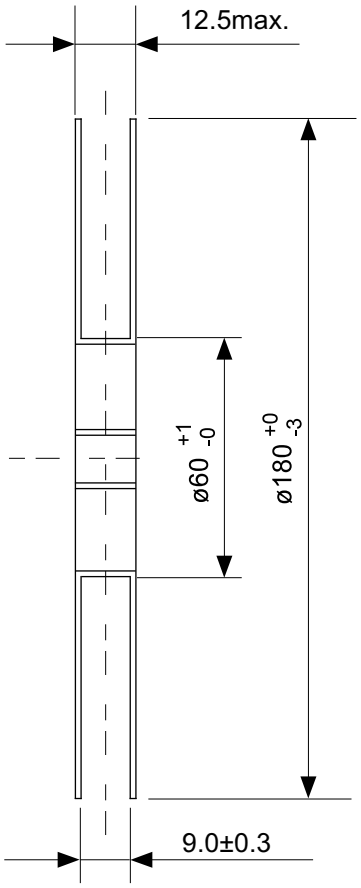

Enlarged drawing in the central part

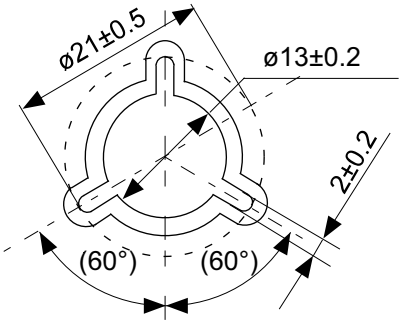

No. MP005-A-R-SD-1.1

TITLE	SOT235-A-Reel		
No.	MP005-A-R-SD-1.1		
SCALE		QTY.	3,000
UNIT	mm		
Seiko Instruments Inc.			

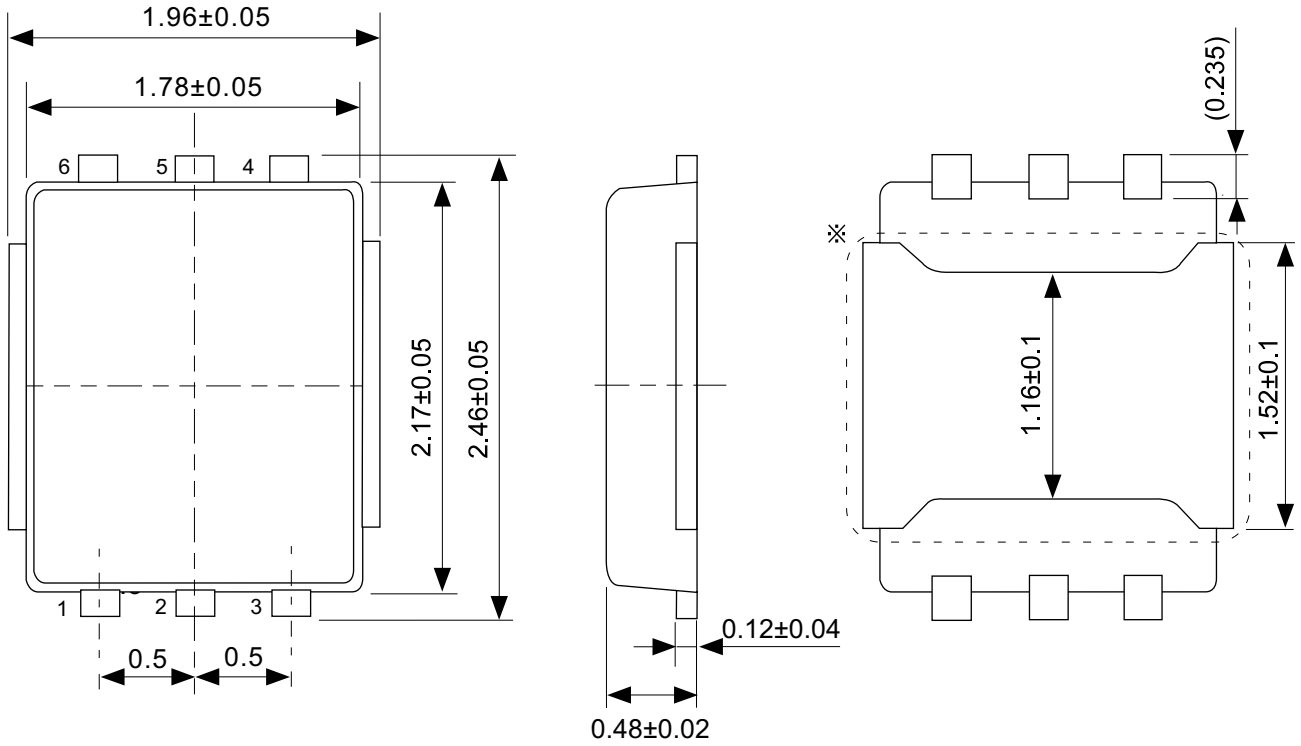

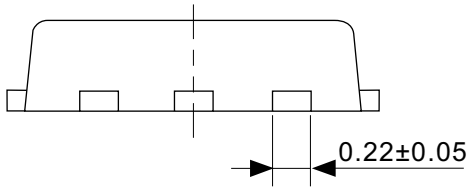

※ The heat sink of back side has different electric potential depending on the product.
Confirm specifications of each product.
Do not use it as the function of electrode.

No. PJ006-A-P-SD-3.0

TITLE	HSNT-6A-A-PKG Dimensions
No.	PJ006-A-P-SD-3.0
SCALE	
UNIT	mm
Seiko Instruments Inc.	

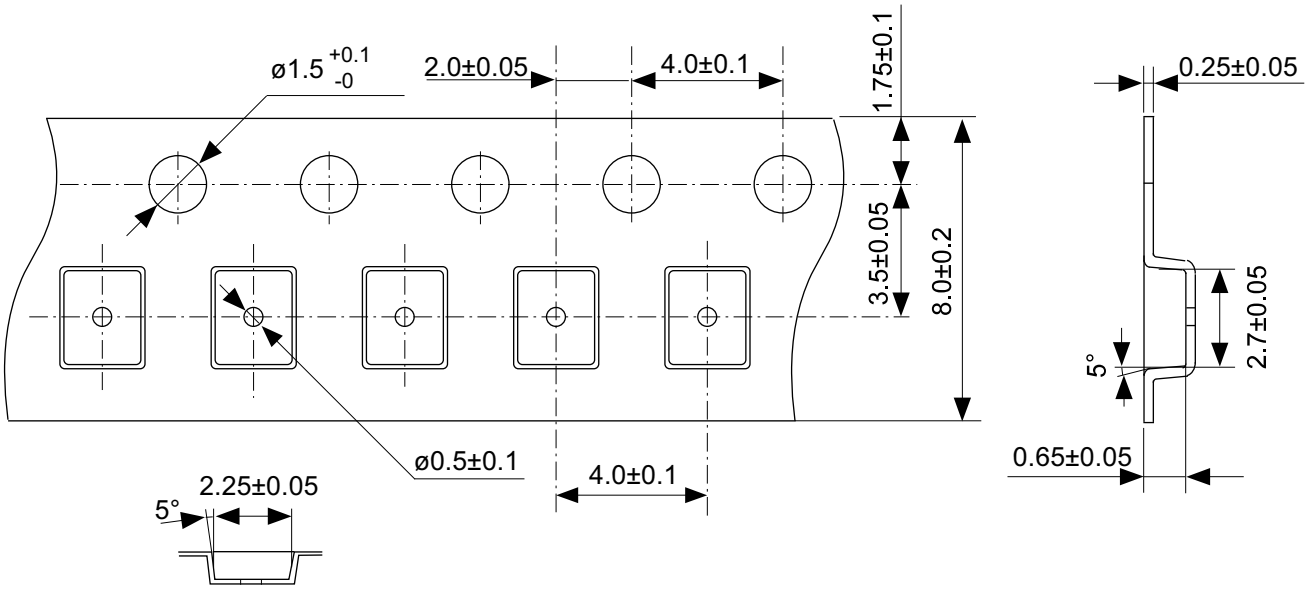

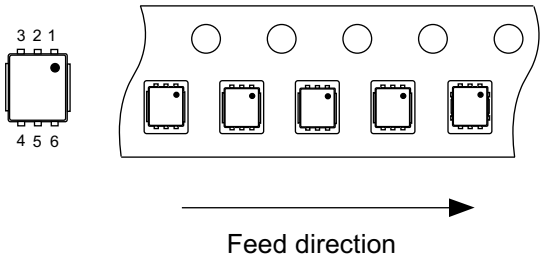

No. PJ006-A-C-SD-1.0

TITLE	HSNT-6A-A-Carrier Tape
No.	PJ006-A-C-SD-1.0
SCALE	
UNIT	mm
Seiko Instruments Inc.	

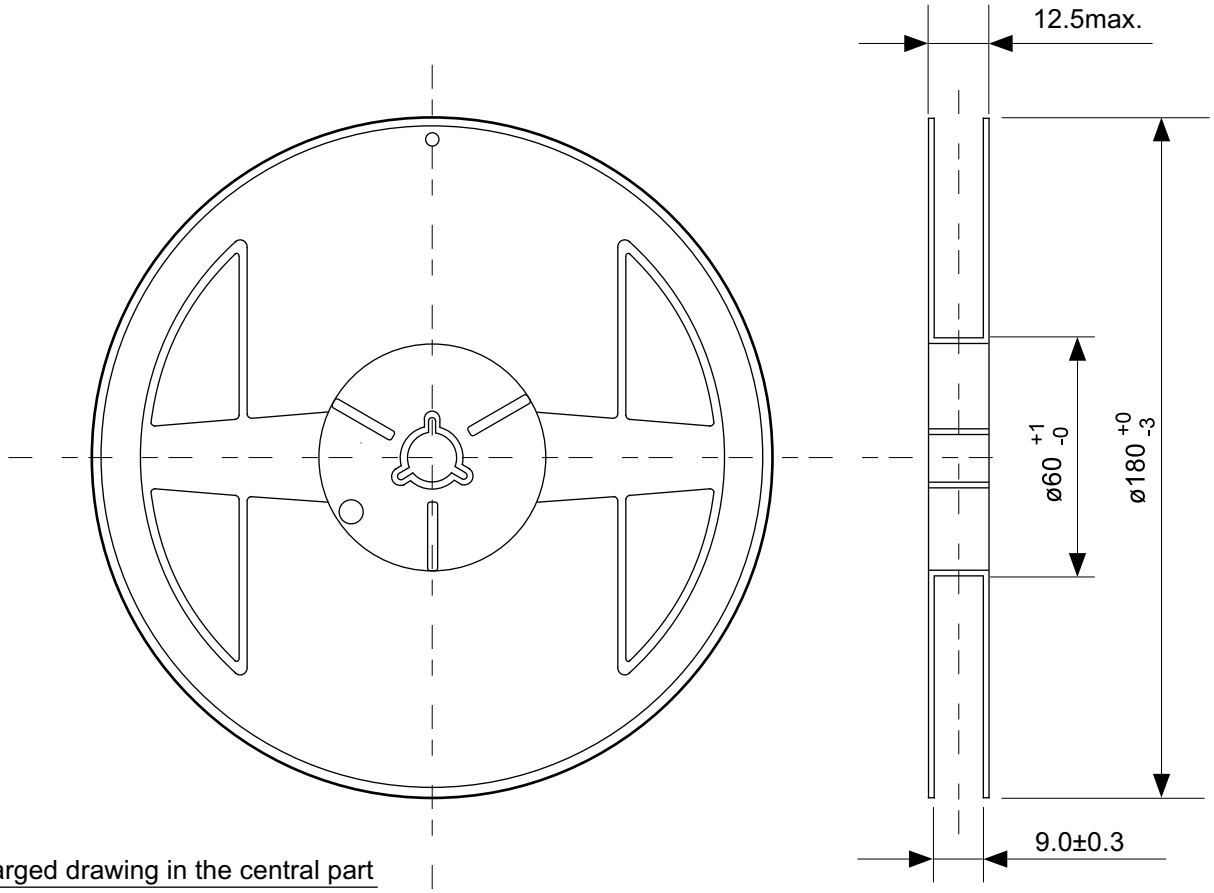

Enlarged drawing in the central part

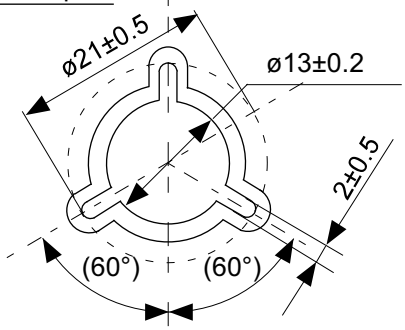

No. PJ006-A-R-SD-1.0

TITLE	HSNT-6A-A-Reel		
No.	PJ006-A-R-SD-1.0		
SCALE		QTY.	5,000
UNIT	mm		
Seiko Instruments Inc.			

Land Recommendation

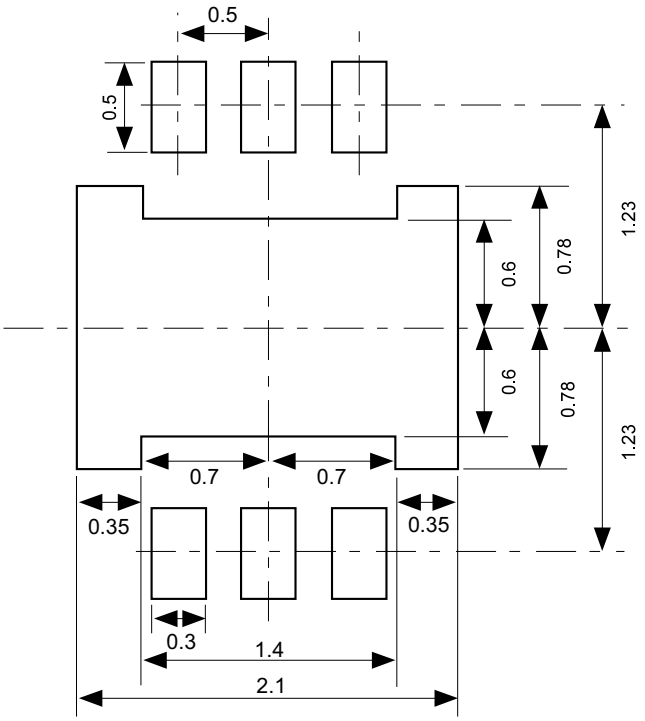

Caution It is recommended to solder the heat sink to a board in order to ensure the heat radiation.

注意　放熱性を確保する為に、PKGの裏面放熱板（ヒートシンク）を基板に半田付けする事を推奨いたします。

Stencil Opening

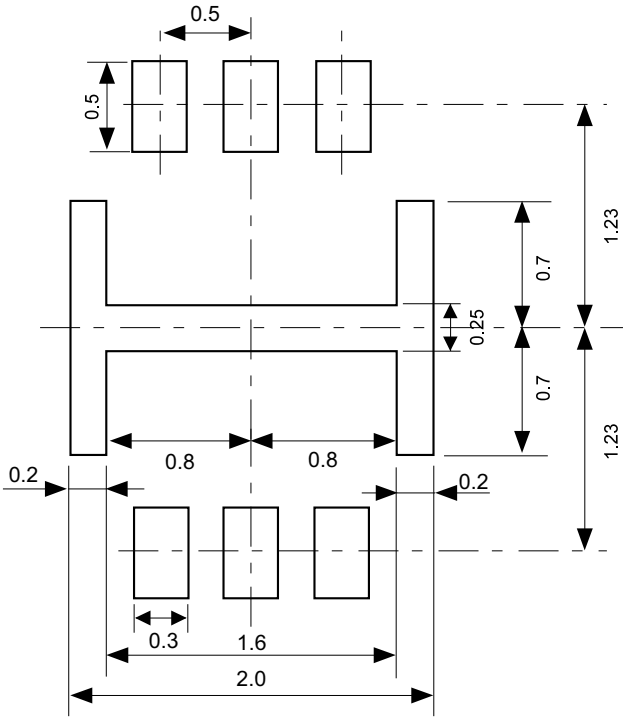

TITLE	HSNT-6A-A-Land &Stencil Opening
No.	PJ006-A-LM-SD-1.1
SCALE	
UNIT	mm
Seiko Instruments Inc.	

No. PJ006-A-LM-SD-1.1

Seiko Instruments Inc.
www.sii-ic.com

- The information described herein is subject to change without notice.
- Seiko Instruments Inc. is not responsible for any problems caused by circuits or diagrams described herein whose related industrial properties, patents, or other rights belong to third parties. The application circuit examples explain typical applications of the products, and do not guarantee the success of any specific mass-production design.
- When the products described herein are regulated products subject to the Wassenaar Arrangement or other agreements, they may not be exported without authorization from the appropriate governmental authority.
- Use of the information described herein for other purposes and/or reproduction or copying without the express permission of Seiko Instruments Inc. is strictly prohibited.
- The products described herein cannot be used as part of any device or equipment affecting the human body, such as exercise equipment, medical equipment, security systems, gas equipment, vehicle equipment, in-vehicle equipment, aviation equipment, aerospace equipment, and nuclear-related equipment, without prior written permission of Seiko Instruments Inc.
- The products described herein are not designed to be radiation-proof.
- Although Seiko Instruments Inc. exerts the greatest possible effort to ensure high quality and reliability, the failure or malfunction of semiconductor products may occur. The user of these products should therefore give thorough consideration to safety design, including redundancy, fire-prevention measures, and malfunction prevention, to prevent any accidents, fires, or community damage that may ensue.

Mouser Electronics

Authorized Distributor

Click to View Pricing, Inventory, Delivery & Lifecycle Information:

Seiko Instruments:

S-1135A10-M5T1S S-1135A10-U5T1G S-1135A11-M5T1S S-1135A11-U5T1G S-1135A12-M5T1S S-1135A12-U5T1G S-1135A13-M5T1S S-1135A13-U5T1G S-1135A14-M5T1S S-1135A14-U5T1G S-1135A15-M5T1S S-1135A15-U5T1G S-1135A16-M5T1S S-1135A16-U5T1G S-1135A17-M5T1S S-1135A17-U5T1G S-1135A18-M5T1S S-1135A18-U5T1G S-1135A19-M5T1S S-1135A19-U5T1G S-1135A1J-M5T1S S-1135A1J-U5T1G S-1135A20-M5T1S S-1135A20-U5T1G S-1135A21-M5T1S S-1135A21-U5T1G S-1135A22-M5T1S S-1135A22-U5T1G S-1135A23-M5T1S S-1135A23-U5T1G S-1135A24-M5T1S S-1135A24-U5T1G S-1135A25-M5T1S S-1135A25-U5T1G S-1135A26-M5T1S S-1135A26-U5T1G S-1135A27-M5T1S S-1135A27-U5T1G S-1135A28-M5T1S S-1135A28-U5T1G S-1135A29-M5T1S S-1135A29-U5T1G S-1135A2J-M5T1S S-1135A2J-U5T1G S-1135A30-M5T1S S-1135A30-U5T1G S-1135A31-M5T1S S-1135A31-U5T1G S-1135A32-M5T1S S-1135A32-U5T1G S-1135A33-M5T1S S-1135A33-U5T1G S-1135A34-M5T1S S-1135A34-U5T1G S-1135A35-M5T1S S-1135A35-U5T1G S-1135B10-M5T1S S-1135B10-U5T1G S-1135B11-M5T1S S-1135B11-U5T1G S-1135B12-M5T1S S-1135B12-U5T1G S-1135B13-M5T1S S-1135B13-U5T1G S-1135B14-M5T1S S-1135B14-U5T1G S-1135B15-M5T1S S-1135B15-U5T1G S-1135B16-M5T1S S-1135B16-U5T1G S-1135B17-M5T1S S-1135B17-U5T1G S-1135B18-M5T1S S-1135B18-U5T1G S-1135B19-M5T1S S-1135B19-U5T1G S-1135B1J-M5T1S S-1135B1J-U5T1G S-1135B20-M5T1S S-1135B20-U5T1G S-1135B21-M5T1S S-1135B21-U5T1G S-1135B22-M5T1S S-1135B22-U5T1G S-1135B23-M5T1S S-1135B23-U5T1G S-1135B24-M5T1S S-1135B24-U5T1G S-1135B25-M5T1S S-1135B25-U5T1G S-1135B26-M5T1S S-1135B26-U5T1G S-1135B27-M5T1S S-1135B27-U5T1G S-1135B28-M5T1S S-1135B28-U5T1G S-1135B29-M5T1S S-1135B29-U5T1G S-1135B2J-M5T1S S-1135B2J-U5T1G

ООО «ЛайфЭлектроникс» “LifeElectronics” LLC

ИНН 7805602321 КПП 780501001 Р/С 40702810122510004610 ФАКБ "АБСОЛЮТ БАНК" (ЗАО) в г.Санкт-Петербурге К/С 30101810900000000703 БИК 044030703

Компания «Life Electronics» занимается поставками электронных компонентов импортного и отечественного производства от производителей и со складов крупных дистрибьюторов Европы, Америки и Азии.

С конца 2013 года компания активно расширяет линейку поставок компонентов по направлению коаксиальный кабель, кварцевые генераторы и конденсаторы (керамические, пленочные, электролитические), за счёт заключения дистрибьюторских договоров

Мы предлагаем:

- *Конкурентоспособные цены и скидки постоянным клиентам.*
- *Специальные условия для постоянных клиентов.*
- *Подбор аналогов.*
- *Поставку компонентов в любых объемах, удовлетворяющих вашим потребностям.*

- *Приемлемые сроки поставки, возможна ускоренная поставка.*
- *Доставку товара в любую точку России и стран СНГ.*
- *Комплексную поставку.*
- *Работу по проектам и поставку образцов.*
- *Формирование склада под заказчика.*

- *Сертификаты соответствия на поставляемую продукцию (по желанию клиента).*
- *Тестирование поставляемой продукции.*
- *Поставку компонентов, требующих военную и космическую приемку.*
- *Входной контроль качества.*
- *Наличие сертификата ISO.*

В составе нашей компании организован Конструкторский отдел, призванный помогать разработчикам, и инженерам.

Конструкторский отдел помогает осуществить:

- *Регистрацию проекта у производителя компонентов.*
- *Техническую поддержку проекта.*
- *Защиту от снятия компонента с производства.*
- *Оценку стоимости проекта по компонентам.*
- *Изготовление тестовой платы монтаж и пусконаладочные работы.*

Тел: +7 (812) 336 43 04 (многоканальный)
Email: org@lifeelectronics.ru

www.lifeelectronics.ru