Low Capacitance, 4-/8-Channel, ±15 V/+12 V *i*CMOS Multiplexers

Data Sheet

ADG1208/ADG1209

FEATURES

<1 pC charge injection over full signal range
1 pF off capacitance
33 V supply range
120 Ω on resistance
Fully specified at ±15 V/+12 V
3 V logic compatible inputs
Rail-to-rail operation
Break-before-make switching action
Available in a 16-lead TSSOP, a 16-lead LFCSP, and a 16-lead SOIC
Typical power consumption < 0.03 µW

APPLICATIONS

Audio and video routing
Automatic test equipment
Data-acquisition systems
Battery-powered systems
Sample-and-hold systems
Communication systems

FUNCTIONAL BLOCK DIAGRAMS

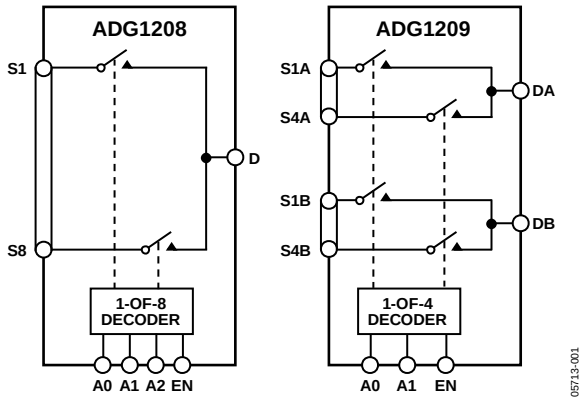

Figure 1.

GENERAL DESCRIPTION

The ADG1208 and ADG1209 are monolithic, *i*CMOS® analog multiplexers comprising eight single channels and four differential channels, respectively. The ADG1208 switches one of eight inputs to a common output as determined by the 3-bit binary address lines A0, A1, and A2. The ADG1209 switches one of four differential inputs to a common differential output as determined by the 2-bit binary address lines A0 and A1. An EN input on both devices enable or disable the device. When disabled, all channels are switched off. When on, each channel conducts equally well in both directions and has an input signal range that extends to the supplies.

The industrial CMOS (*i*CMOS) modular manufacturing process combines high voltage complementary metal-oxide semiconductor (CMOS) and bipolar technologies. It enables the development of a wide range of high performance analog ICs capable of 33 V operation in a footprint that no other generation of high voltage devices has been able to achieve. Unlike analog ICs using conventional CMOS processes, *i*CMOS components can tolerate high supply voltages while providing increased performance, dramatically lower power consumption, and reduced package size.

The ultralow capacitance and exceptionally low charge injection of these multiplexers make them ideal solutions for data acquisition and sample-and-hold applications, where low glitch and fast settling are required. Figure 2 shows that there is minimum charge injection over the entire signal range of the device. *i*CMOS construction also ensures ultralow power dissipation, making the devices ideally suited for portable and battery-powered instruments.

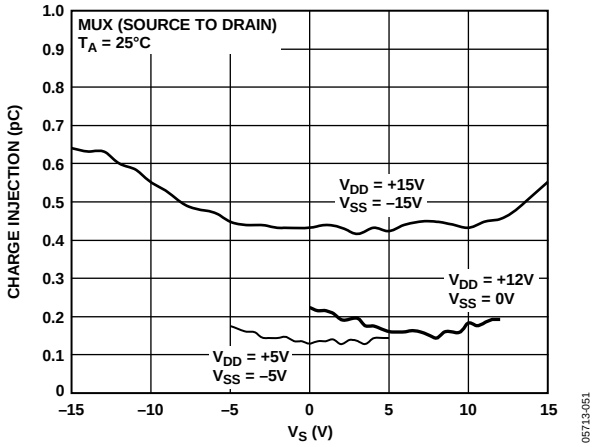

Figure 2. Source to Drain Charge Injection vs. Source Voltage

Rev. E **Document Feedback**

Information furnished by Analog Devices is believed to be accurate and reliable. However, no responsibility is assumed by Analog Devices for its use, nor for any infringements of patents or other rights of third parties that may result from its use. Specifications subject to change without notice. No license is granted by implication or otherwise under any patent or patent rights of Analog Devices. Trademarks and registered trademarks are the property of their respective owners.

One Technology Way, P.O. Box 9106, Norwood, MA 02062-9106, U.S.A.
Tel: 781.329.4700

©2006–2016 Analog Devices, Inc. All rights reserved.

Technical Support **www.analog.com**

TABLE OF CONTENTS

Features ... 1
Applications ... 1
Functional Block Diagrams ... 1
General Description ... 1
Revision History ... 2
Specifications ... 3
Dual Supply ... 3
Single Supply ... 5
Absolute Maximum Ratings ... 7
ESD Caution ... 7
Pin Configurations and Function Descriptions ... 8
Typical Performance Characteristics ... 12
Terminology ... 16
Test Circuits ... 17
Outline Dimensions ... 20
Ordering Guide ... 21

REVISION HISTORY

6/2016—Rev. D to Rev. E
Changes to Analog Inputs Parameter, Table 3 ... 7
Added Digital Inputs Parameter, Table 3 ... 7
Moved Figure 7 ... 10
Change to Table 7 ... 10
Deleted Table 8; Renumbered Sequentially ... 11
Updated Outline Dimensions ... 20
Changes to Ordering Guide ... 21

3/2016—Rev. C to Rev. D
Changes to Table 4 Title ... 8
Changes to Table 5 Title ... 9
Changes to Table 7 Title ... 10
Changes to Figure 7 ... 11
Added Table 8; Renumbered Sequentially ... 11
Changes to Table 9 Title ... 12

8/2015—Rev. B to Rev. C
Changes to Features Section ... 1
Added Figure 4; Renumbered Sequentially ... 8
Changes to Table 4 ... 8
Changes to Figure 5 ... 9
Added Table 5; Renumbered Sequentially ... 9
Added Figure 7 ... 10
Changes to Table 7 ... 10
Changes to Figure 8 ... 11
Added Table 8 ... 11
Updated Outline Dimensions ... 19
Changes to Ordering Guide ... 20

1/2009—Rev. A to Rev. B
Change to I_{DD} Parameter, Table 1 ... 4
Change to I_{DD} Parameter, Table 2 ... 6

4/2007—Rev. 0 to Rev. A
Added 16-lead SOIC ... Universal
Changes to Table 1 ... 3
Changes to Table 2 ... 5
Changes to Figure 10 and Figure 11 ... 10
Updated Outline Dimensions ... 17
Changes to Ordering Guide ... 18

4/2006—Revision 0: Initial Version

SPECIFICATIONS

DUAL SUPPLY

V_{DD} = +15 V ± 10%, V_{SS} = −15 V ± 10%, GND = 0 V, unless otherwise noted. Temperature range is as follows: Y version: −40°C to +125°C.

Table 1.

Parameter	+25°C	−40°C to +85°C	−40°C to +125°C	Unit	Test Conditions/Comments
ANALOG SWITCH					
Analog Signal Range			V_{SS} to V_{DD}	V	
On Resistance, R_{ON}	120			Ω typ	V_S = ±10 V, I_S = −1 mA, see Figure 31
	200	240	270	Ω max	V_{DD} = +13.5 V, V_{SS} = −13.5 V
On-Resistance Match Between Channels, ΔR_{ON}	3.5			Ω typ	V_S = ±10 V, I_S = −1 mA
	6	10	12	Ω max	
On-Resistance Flatness, R_{FLAT} (On)	20			Ω typ	V_S = −5 V/0 V/+5 V, I_S = −1 mA
	64	76	83	Ω max	
LEAKAGE CURRENTS					
Source Off Leakage, I_S (Off)	±0.003			nA typ	V_D = ±10 V, V_S = −10 V, see Figure 32
	±0.1	±0.6	±1	nA max	
Drain Off Leakage, I_D (Off)	±0.003			nA typ	V_S = 1 V/10 V, V_D = 10 V/1 V, see Figure 32
ADG1208	±0.1	±0.6	±1	nA max	
ADG1209	±0.1	±0.6	±1	nA max	
Channel On Leakage, I_D, I_S (On)	±0.02			nA typ	V_S = V_D = ±10 V, see Figure 33
ADG1208	±0.2	±0.6	±1	nA max	
ADG1209	±0.2	±0.6	±1	nA max	
DIGITAL INPUTS					
Input High Voltage, V_{INH}			2.0	V min	
Input Low Voltage, V_{INL}			0.8	V max	
Input Current, I_{INL} or I_{INH}	±0.005			µA max	V_{IN} = V_{INL} or V_{INH}
			±0.1	µA max	
Digital Input Capacitance, C_{IN}	2			pF typ	
DYNAMIC CHARACTERISTICS[1]					
Transition Time, $t_{TRANSITION}$	80			ns typ	R_L = 300 Ω, C_L = 35 pF
	130	165	185	ns max	V_S = 10 V, see Figure 34
t_{ON} (EN)	75			ns typ	R_L = 300 Ω, C_L = 35 pF
	95	105	115	ns max	V_S = 10 V, see Figure 36
t_{OFF} (EN)	83			ns typ	R_L = 300 Ω, C_L = 35 pF
	100	125	140	ns max	V_S = 10 V, see Figure 36
Break-Before-Make Time Delay, t_{BBM}	25			ns typ	R_L = 300 Ω, C_L = 35 pF
			10	ns min	V_{S1} = V_{S2} = 10 V, see Figure 35
Charge Injection	0.4			pC typ	V_S = 0 V, R_S = 0 Ω, C_L = 1 nF, see Figure 37
Off Isolation	−85			dB typ	R_L = 50 Ω, C_L = 5 pF, f = 1 MHz, see Figure 38
Channel to Channel Crosstalk	−85			dB typ	R_L = 50 Ω, C_L = 5 pF, f = 1 MHz, see Figure 40
Total Harmonic Distortion Plus Noise	0.15			% typ	R_L = 10 kΩ, 5 V rms, f = 20 Hz to 20 kHz, see Figure 41
−3 dB Bandwidth	550			MHz typ	R_L = 50 Ω, C_L = 5 pF, see Figure 39
C_S (Off)	1			pF typ	f = 1 MHz, V_S = 0 V
	1.5			pF max	f = 1 MHz, V_S = 0 V
C_D (Off), ADG1208	6			pF typ	f = 1 MHz, V_S = 0 V
	7			pF max	f = 1 MHz, V_S = 0 V
C_D (Off), ADG1209	3.5			pF typ	f = 1 MHz, V_S = 0 V
	4.5			pF max	f = 1 MHz, V_S = 0 V

Parameter	+25°C	−40°C to +85°C	−40°C to +125°C	Unit	Test Conditions/Comments
C_D, C_S (On), ADG1208	7			pF typ	f = 1 MHz, V_S = 0 V
	8			pF max	f = 1 MHz, V_S = 0 V
C_D, C_S (On), ADG1209	5			pF typ	f = 1 MHz, V_S = 0 V
	6			pF max	f = 1 MHz, V_S = 0 V
POWER REQUIREMENTS					V_{DD} = +16.5 V, V_{SS} = −16.5 V
I_{DD}	0.002			µA typ	Digital inputs = 0 V or V_{DD}
			1.0	µA max	
I_{DD}	220			µA typ	Digital inputs = 5 V
			380	µA max	
I_{SS}	0.002			µA typ	Digital inputs = 0 V or V_{DD}
			1.0	µA max	
I_{SS}	0.002			µA typ	Digital inputs = 5 V
			1.0	µA max	
V_{DD}/V_{SS}			±5/±16.5	V min/max	$\|V_{DD}\| = \|V_{SS}\|$

[1] Guaranteed by design, not subject to production test.

SINGLE SUPPLY

V_{DD} = 12 V ± 10%, V_{SS} = 0 V, GND = 0 V, unless otherwise noted. Temperature range is as follows: Y version: −40°C to +125°C.

Table 2.

Parameter	+25°C	−40°C to +85°C	−40°C to +125°C	Unit	Test Conditions/Comments
ANALOG SWITCH					
Analog Signal Range			0 to V_{DD}	V	
On Resistance, R_{ON}	300			Ω typ	V_S = 0 V to 10 V, I_S = −1 mA, see Figure 31
	475	567	625	Ω max	V_{DD} = 10.8 V, V_{SS} = 0 V
On-Resistance Match Between Channels, ΔR_{ON}	5			Ω typ	V_S = 0 V to 10 V, I_S = −1 mA
	16	26	27	Ω max	
On-Resistance Flatness, R_{FLAT} (On)	60			Ω typ	V_S = 3 V/6 V/9 V, I_S = −1 mA
LEAKAGE CURRENTS					V_{DD} = 13.2 V
Source Off Leakage, I_S (Off)	±0.003			nA typ	V_S = 1 V/10 V, V_D = 10 V/1 V, see Figure 32
	±0.1	±0.6	±1	nA max	
Drain Off Leakage, I_D (Off)	±0.003			nA typ	V_S = 1 V/10 V, V_D = 10 V/1 V, see Figure 32
ADG1208	±0.1	±0.6	±1	nA max	
ADG1209	±0.1	±0.6	±1	nA max	
Channel On Leakage I_D, I_S (On)	±0.02			nA typ	V_S = V_D = 1 V or 10 V, see Figure 33
ADG1208	±0.2	±0.6	±1	nA max	
ADG1209	±0.2	±0.6	±1	nA max	
DIGITAL INPUTS					
Input High Voltage, V_{INH}			2.0	V min	
Input Low Voltage, V_{INL}			0.8	V max	
Input Current, I_{INL} or I_{INH}	±0.001				
			±0.1	µA max	V_{IN} = V_{INL} or V_{INH}
Digital Input Capacitance, C_{IN}	3			pF typ	
DYNAMIC CHARACTERISTICS[1]					
Transition Time, $t_{TRANSITION}$	100			ns typ	R_L = 300 Ω, C_L = 35 pF
	170	210	235		V_S = 8 V, see Figure 34
t_{ON} (EN)	90			ns typ	R_L = 300 Ω, C_L = 35 pF
	110	140	160		V_S = 8 V, see Figure 36
t_{OFF} (EN)	105			ns typ	R_L = 300 Ω, C_L = 35 pF
	130	155	175		V_S = 8 V, see Figure 36
Break-Before-Make Time Delay, t_{BBM}	45			ns typ	R_L = 300 Ω, C_L = 35 pF
			20	ns min	V_{S1} = V_{S2} = 8 V, see Figure 35
Charge Injection	−0.2			pC typ	V_S = 6 V, R_S = 0 Ω, C_L = 1 nF, see Figure 37
Off Isolation	−85			dB typ	R_L = 50 Ω, C_L = 5 pF, f = 1 MHz, see Figure 38
Channel to Channel Crosstalk	−85			dB typ	R_L = 50 Ω, C_L = 5 pF, f = 1 MHz, see Figure 40
−3 dB Bandwidth	450			MHz typ	R_L = 50 Ω, C_L = 5 pF, see Figure 39
C_S (Off)	1.2			pF typ	f = 1 MHz, V_S = 6 V
	1.8			pF max	f = 1 MHz, V_S = 6 V
C_D (Off), ADG1208	7.5			pF typ	f = 1 MHz, V_S = 6 V
	9			pF max	f = 1 MHz, V_S = 6 V
C_D (Off), ADG1209	4.5			pF typ	f = 1 MHz, V_S = 6 V
	5.5			pF max	f = 1 MHz, V_S = 6 V
C_D, C_S (On), ADG1208	9			pF typ	f = 1 MHz, V_S = 6 V
	10.5			pF max	f = 1 MHz, V_S = 6 V
C_D, C_S (On), ADG1209	6			pF typ	f = 1 MHz, V_S = 6 V
	7.5			pF max	f = 1 MHz, V_S = 6 V

Parameter	+25°C	−40°C to +85°C	−40°C to +125°C	Unit	Test Conditions/Comments
POWER REQUIREMENTS					V_{DD} = 13.2 V
I_{DD}	0.002			µA typ	Digital inputs = 0 V or V_{DD}
			1.0	µA max	
I_{DD}	220			µA typ	Digital inputs = 5 V
			380	µA max	
V_{DD}			5/16.5	V min/max	V_{SS} = 0 V, GND = 0 V

[1] Guaranteed by design, not subject to production test.

ABSOLUTE MAXIMUM RATINGS

T_A = 25°C, unless otherwise noted.

Table 3.

Parameter	Rating
V_{DD} to V_{SS}	35 V
V_{DD} to GND	−0.3 V to +25 V
V_{SS} to GND	+0.3 V to −25 V
Analog Inputs[1]	V_{SS} − 0.3 V to V_{DD} + 0.3 V or 30 mA (whichever occurs first)
Digital Inputs[1]	GND − 0.3 V to V_{DD} + 0.3 V or 30 mA (whichever occurs first)
Continuous Current, S or D	30 mA
Peak Current, S or D (Pulsed at 1 ms, 10% Duty Cycle Maximum)	100 mA
Operating Temperature Range	
Industrial (Y Version)	−40°C to +125°C
Storage Temperature	−65°C to +150°C
Junction Temperature	150°C
θ_{JA} Thermal Impedance	
TSSOP	112°C/W
LFCSP	30.4°C/W
SOIC	77°C/W
Reflow Soldering Peak Temperature (Pb-Free)	260(+0/−5)°C

[1] Overvoltages at A, EN, S, or D are clamped by internal diodes. Current should be limited to the maximum ratings given.

Stresses at or above those listed under Absolute Maximum Ratings may cause permanent damage to the product. This is a stress rating only; functional operation of the product at these or any other conditions above those indicated in the operational section of this specification is not implied. Operation beyond the maximum operating conditions for extended periods may affect product reliability.

ESD CAUTION

ESD (electrostatic discharge) sensitive device. Charged devices and circuit boards can discharge without detection. Although this product features patented or proprietary protection circuitry, damage may occur on devices subjected to high energy ESD. Therefore, proper ESD precautions should be taken to avoid performance degradation or loss of functionality.

PIN CONFIGURATIONS AND FUNCTION DESCRIPTIONS

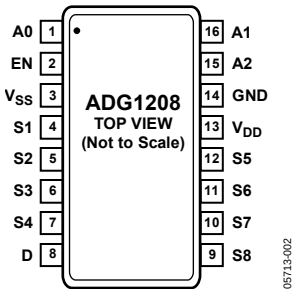

Figure 3. 16-Lead TSSOP Pin Configuration (ADG1208)

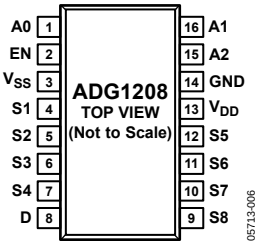

Figure 4. 16-Lead SOIC Pin Configuration (ADG1208)

Table 4. 16-Lead TSSOP and 16-Lead SOIC Pin Function Descriptions (ADG1208)

Pin No.	Mnemonic	Description
1	A0	Logic Control Input.
2	EN	Active High Digital Input. When low, the device is disabled and all switches are off. When high, Ax logic inputs determine on switches.
3	V_{SS}	Most Negative Power Supply Potential. In single-supply applications, it can be connected to ground.
4	S1	Source Terminal 1. Can be an input or an output.
5	S2	Source Terminal 2. Can be an input or an output.
6	S3	Source Terminal 3. Can be an input or an output.
7	S4	Source Terminal 4. Can be an input or an output.
8	D	Drain Terminal. Can be an input or an output.
9	S8	Source Terminal 8. Can be an input or an output.
10	S7	Source Terminal 7. Can be an input or an output.
11	S6	Source Terminal 6. Can be an input or an output.
12	S5	Source Terminal 5. Can be an input or an output.
13	V_{DD}	Most Positive Power Supply Potential.
14	GND	Ground (0 V) Reference.
15	A2	Logic Control Input.
16	A1	Logic Control Input.

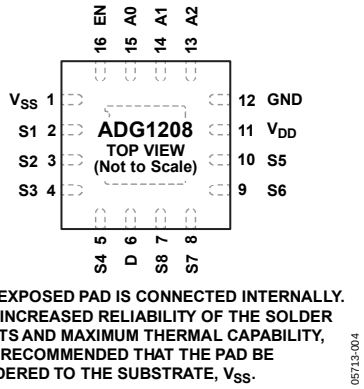

Figure 5. 16-Lead LFCSP Pin Configuration (ADG1208)

Table 5. 16-Lead LFCSP Pin Function Descriptions (ADG1208)

Pin No.	Mnemonic	Description
1	V_{SS}	Most Negative Power Supply Potential. In single-supply applications, it can be connected to ground.
2	S1	Source Terminal 1. Can be an input or an output.
3	S2	Source Terminal 2. Can be an input or an output.
4	S3	Source Terminal 3. Can be an input or an output.
5	S4	Source Terminal 4. Can be an input or an output.
6	D	Drain Terminal. Can be an input or an output.
7	S8	Source Terminal 8. Can be an input or an output.
8	S7	Source Terminal 7. Can be an input or an output.
9	S6	Source Terminal 6. Can be an input or an output.
10	S5	Source Terminal 5. Can be an input or an output.
11	V_{DD}	Most Positive Power Supply Potential.
12	GND	Ground (0 V) Reference.
13	A2	Logic Control Input.
14	A1	Logic Control Input.
15	A0	Logic Control Input.
16	EN	Active High Digital Input. When low, the device is disabled and all switches are off. When high, Ax logic inputs determine on switches.
	EPAD	Exposed Pad. The exposed pad is connected internally. For increased reliability of the solder joints and maximum thermal capability, it is recommended that the pad be soldered to the substrate, V_{SS}.

Table 6. ADG1208 Truth Table

A2	A1	A0	EN	On Switch
X	X	X	0	None
0	0	0	1	1
0	0	1	1	2
0	1	0	1	3
0	1	1	1	4
1	0	0	1	5
1	0	1	1	6
1	1	0	1	7
1	1	1	1	8

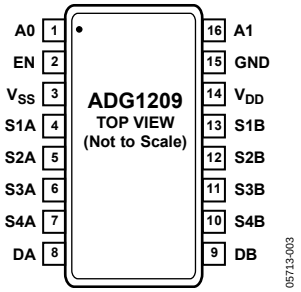

Figure 6. 16-Lead TSSOP Pin Configuration (ADG1209)

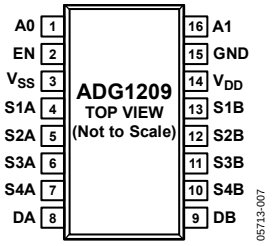

Figure 7.16-Lead SOIC Pin Configuration (ADG1209)

Table 7. 16-Lead TSSOP and 16-Lead SOIC Pin Function Descriptions (ADG1209)

Pin No.	Mnemonic	Description
1	A0	Logic Control Input.
2	EN	Active High Digital Input. When low, the device is disabled and all switches are off. When high, Ax logic inputs determine on switches.
3	V_{SS}	Most Negative Power Supply Potential. In single-supply applications, it can be connected to ground.
4	S1A	Source Terminal 1A. Can be an input or an output.
5	S2A	Source Terminal 2A. Can be an input or an output.
6	S3A	Source Terminal 3A. Can be an input or an output.
7	S4A	Source Terminal 4A. Can be an input or an output.
8	DA	Drain Terminal A. Can be an input or an output.
9	DB	Drain Terminal B. Can be an input or an output.
10	S4B	Source Terminal 4B. Can be an input or an output.
11	S3B	Source Terminal 3B. Can be an input or an output.
12	S2B	Source Terminal 2B. Can be an input or an output.
13	S1B	Source Terminal 1B. Can be an input or an output.
14	V_{DD}	Most Positive Power Supply Potential.
15	GND	Ground (0 V) Reference.
16	A1	Logic Control Input.

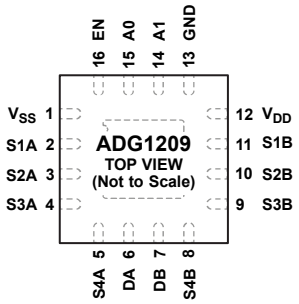

1. THE EXPOSED PAD IS CONNECTED INTERNALLY. FOR INCREASED RELIABILITY OF THE SOLDER JOINTS AND MAXIMUM THERMAL CAPABILITY, IT IS RECOMMENDED THAT THE PAD BE SOLDERED TO THE SUBSTRATE, V_{SS}.

05713-005

Figure 8. 16-Lead LFCSP Pin Configuration (ADG1209)

Table 8. 16-Lead LFCSP Pin Function Descriptions (ADG1209)

Pin No.	Mnemonic	Description
1	V_{SS}	Most Negative Power Supply Potential. In single-supply applications, it can be connected to ground.
2	S1A	Source Terminal 1A. Can be an input or an output.
3	S2A	Source Terminal 2A. Can be an input or an output.
4	S3A	Source Terminal 3A. Can be an input or an output.
5	S4A	Source Terminal 4A. Can be an input or an output.
6	DA	Drain Terminal A. Can be an input or an output.
7	DB	Drain Terminal B. Can be an input or an output.
8	S4B	Source Terminal 4B. Can be an input or an output.
9	S3B	Source Terminal 3B. Can be an input or an output.
10	S2B	Source Terminal 2B. Can be an input or an output.
11	S1B	Source Terminal 1B. Can be an input or an output.
12	V_{DD}	Most Positive Power Supply Potential.
13	GND	Ground (0 V) Reference.
14	A1	Logic Control Input.
15	A0	Logic Control Input.
16	EN	Active High Digital Input. When low, the device is disabled and all switches are off. When high, Ax logic inputs determine on switches.
	EPAD	Exposed Pad. The exposed pad is connected internally. For increased reliability of the solder joints and maximum thermal capability, it is recommended that the pad be soldered to the substrate, V_{SS}.

Table 9. ADG1209 Truth Table

A1	A0	EN	On Switch Pair
X	X	0	None
0	0	1	1
0	1	1	2
1	0	1	3
1	1	1	4

TYPICAL PERFORMANCE CHARACTERISTICS

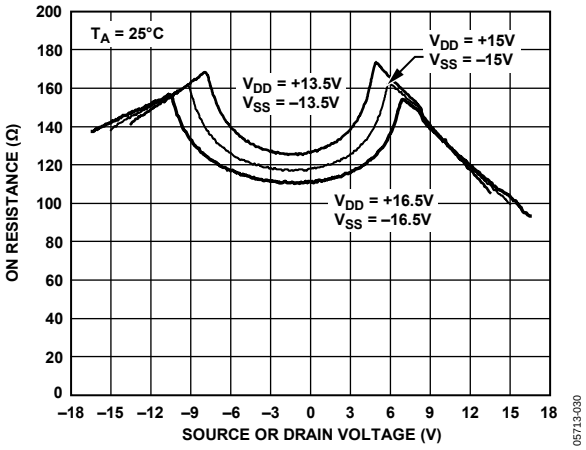

Figure 9. On Resistance as a Function of V_D (V_S) for Dual Supply

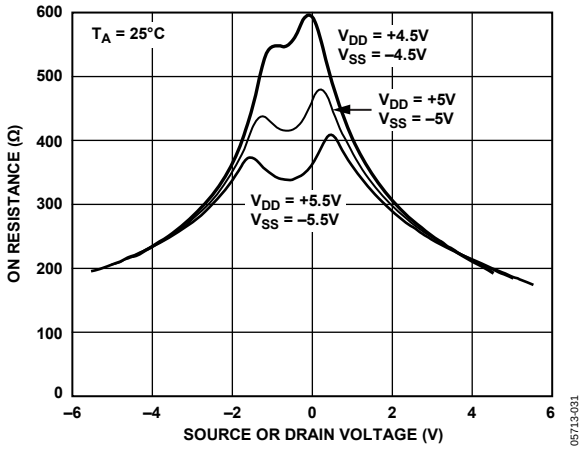

Figure 10. On Resistance as a Function of V_D (V_S) for Dual Supply

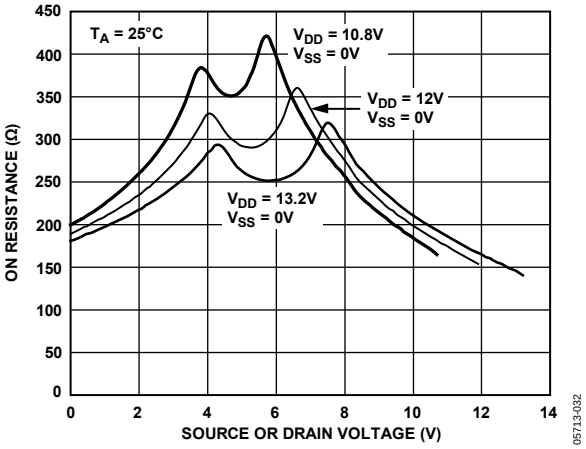

Figure 11. On Resistance as a Function of V_D (V_S) for Single Supply

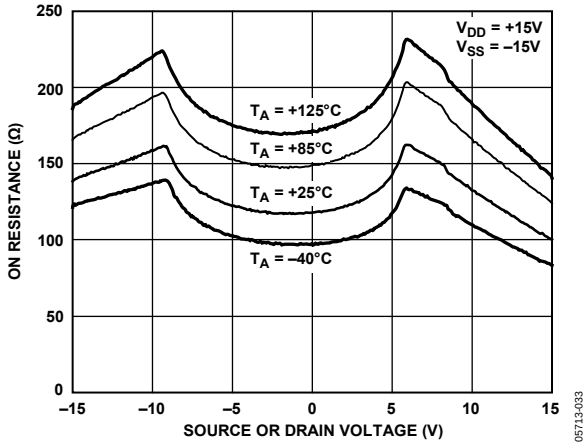

Figure 12. On Resistance as a Function of V_D (V_S) for Different Temperatures, Dual Supply

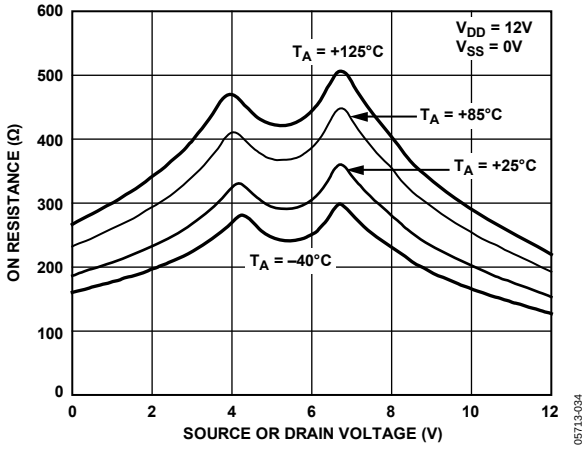

Figure 13. On Resistance as a Function of V_D (V_S) for Different Temperatures, Single Supply

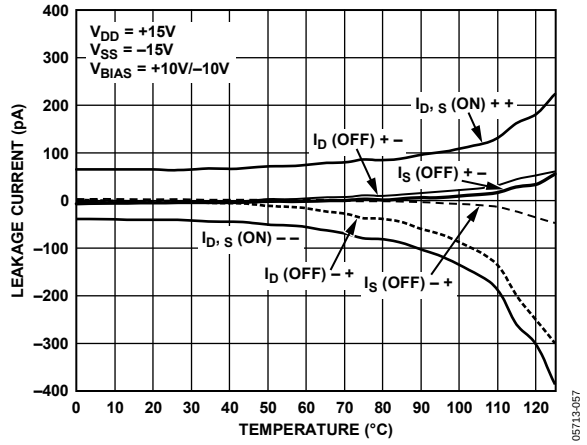

Figure 14. ADG1208 Leakage Currents as a Function of Temperature, Dual Supply

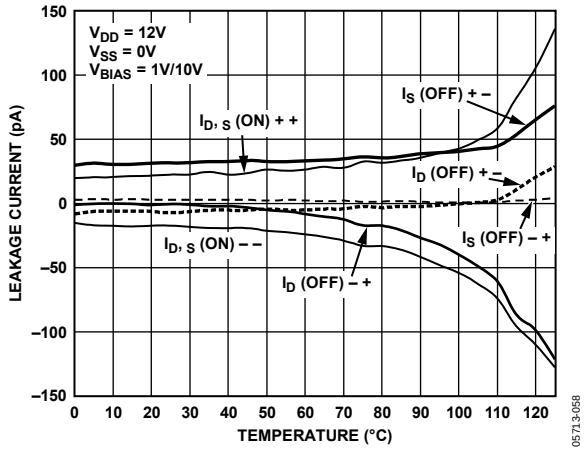

Figure 15. ADG1208 Leakage Currents as a Function of Temperature, Single Supply

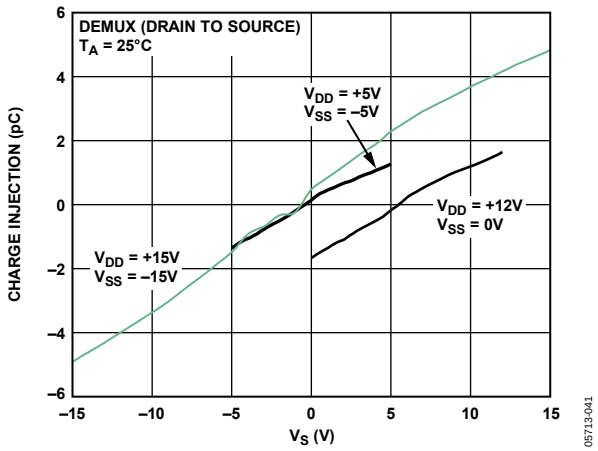

Figure 18. Drain-to-Source Charge Injection vs. Source Voltage

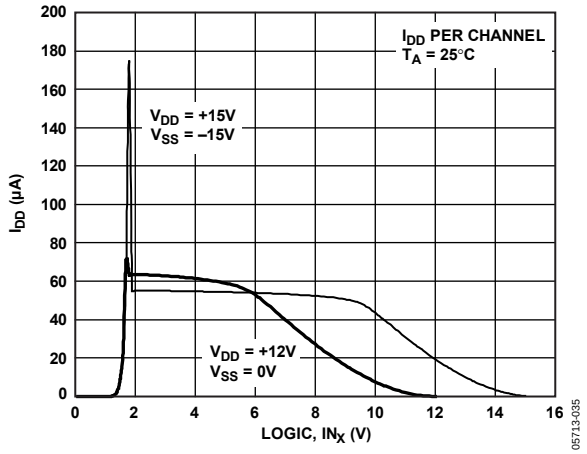

Figure 16. I_{DD} vs. Logic Level

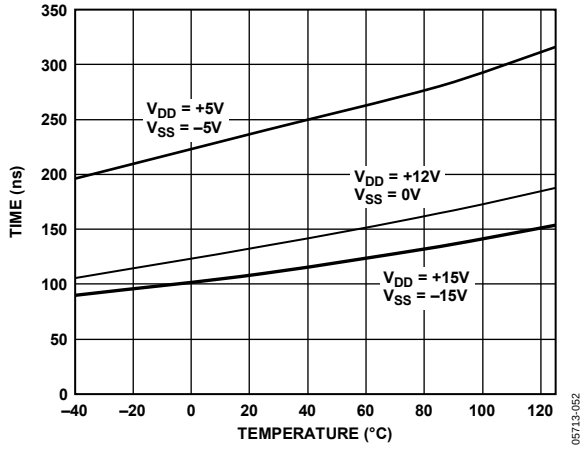

Figure 19. t_{ON}/t_{OFF} Times vs. Temperature

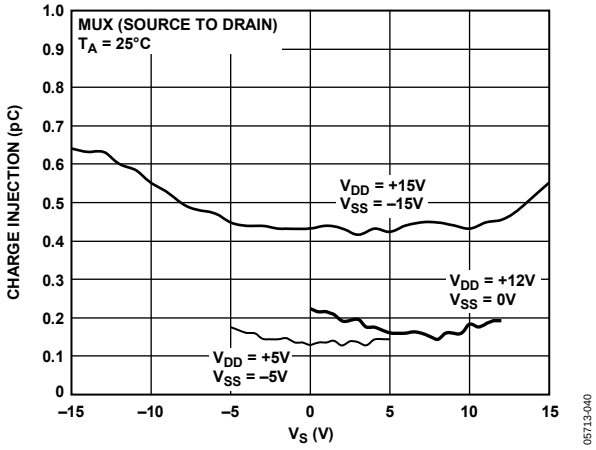

Figure 17. Source-to-Drain Charge Injection vs. Source Voltage

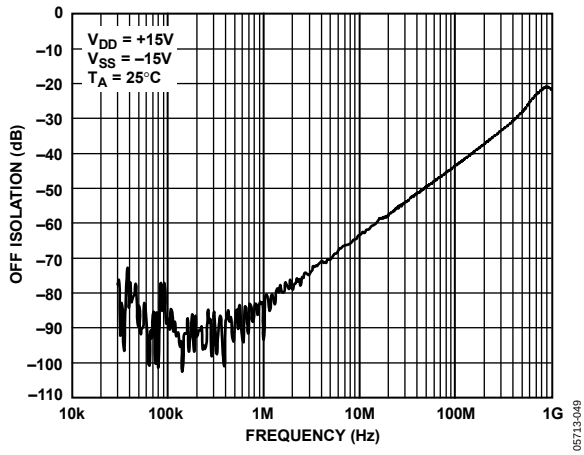

Figure 20. Off Isolation vs. Frequency

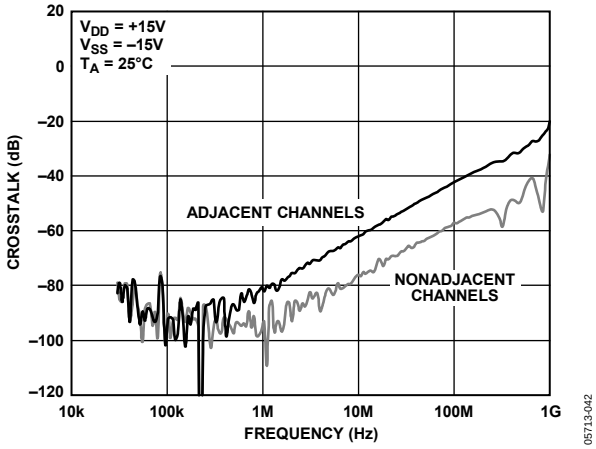

Figure 21. ADG1208 Crosstalk vs. Frequency

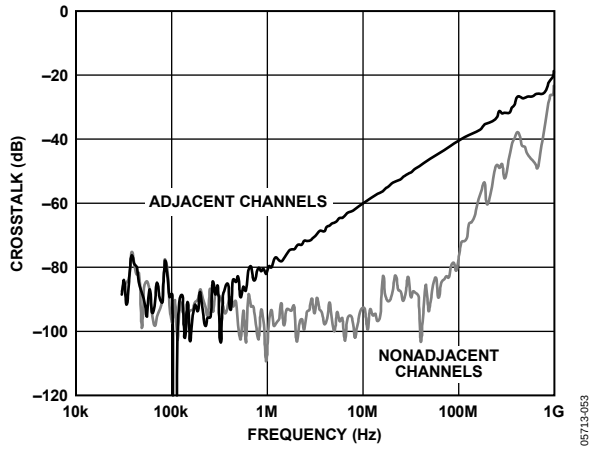

Figure 22. ADG1209 Crosstalk vs. Frequency

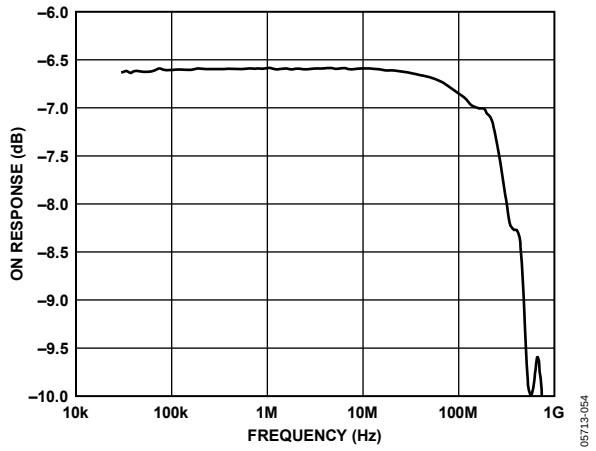

Figure 23. On Response vs. Frequency

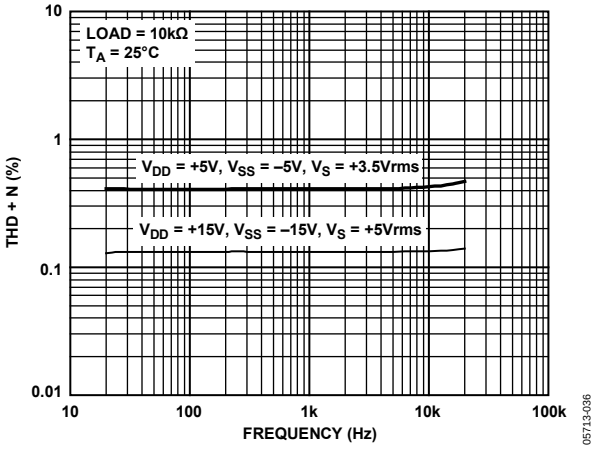

Figure 24. THD + N vs. Frequency

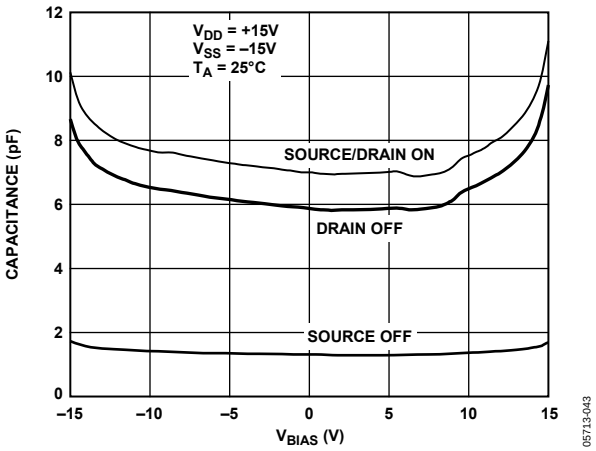

Figure 25. ADG1208 Capacitance vs. Source Voltage, ±15 V Dual Supply

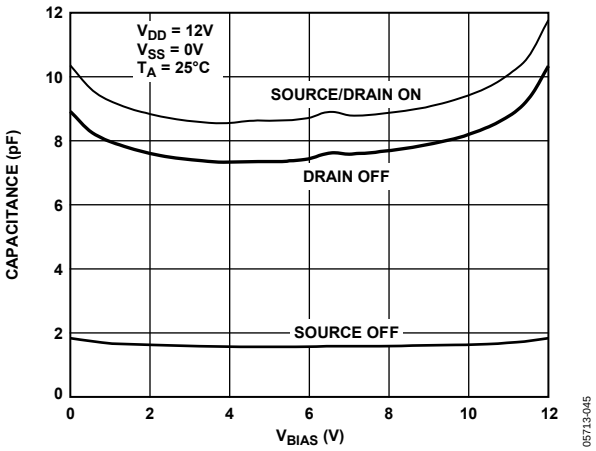

Figure 26. ADG1208 Capacitance vs. Source Voltage, 12 V Single Supply

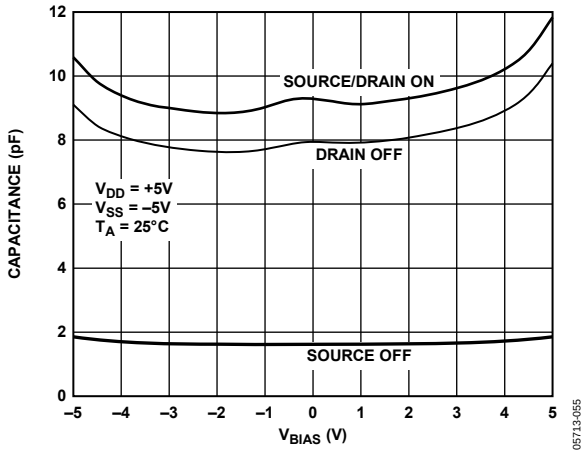

Figure 27. ADG1208 Capacitance vs. Source Voltage, ±5 V Dual Supply

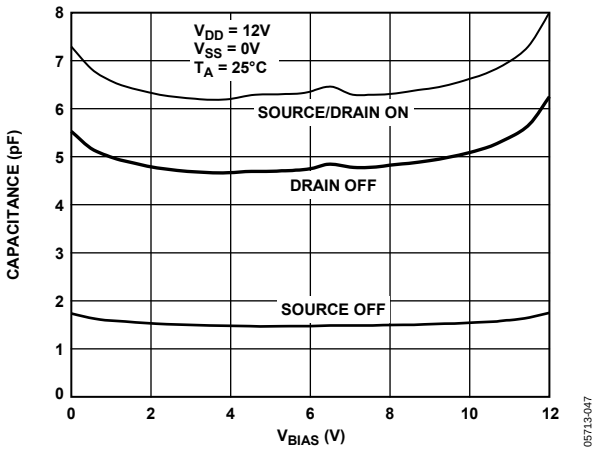

Figure 29. ADG1209 Capacitance vs. Source Voltage, 12 V Single Supply

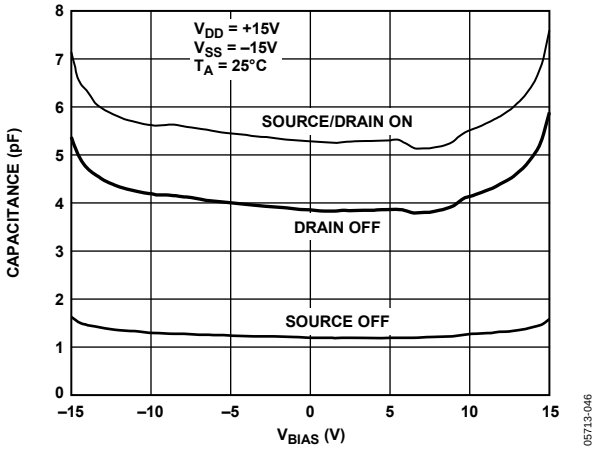

Figure 28. ADG1209 Capacitance vs. Source Voltage, ±15 V Dual Supply

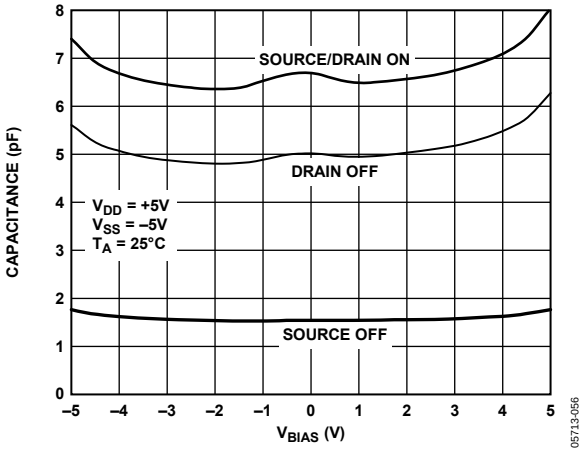

Figure 30. ADG1209 Capacitance vs. Source Voltage, ±5 V Dual Supply

TERMINOLOGY

R_{ON}
Ohmic resistance between D and S.

ΔR_{ON}
Difference between the R_{ON} of any two channels.

I_S (Off)
Source leakage current when the switch is off.

I_D (Off)
Drain leakage current when the switch is off.

I_D, I_S (On)
Channel leakage current when the switch is on.

V_D (V_S)
Analog voltage on Terminal D, Terminal S.

C_S (Off)
Channel input capacitance for off condition.

C_D (Off)
Channel output capacitance for off condition.

C_D, C_S (On)
On switch capacitance.

C_{IN}
Digital input capacitance.

t_{ON} (EN)

Delay time between the 50% and 90% points of the digital input and switch on condition.

t_{OFF} (EN)
Delay time between the 50% and 90% points of the digital input and switch off condition.

$t_{TRANSITION}$
Delay time between the 50% and 90% points of the digital inputs and the switch on condition when switching from one address state to another.

T_{BBM}
Off time measured between the 80% point of both switches when switching from one address state to another.

V_{INL}
Maximum input voltage for Logic 0.

V_{INH}
Minimum input voltage for Logic 1.

I_{INL} (I_{INH})
Input current of the digital input.

I_{DD}
Positive supply current.

I_{SS}
Negative supply current.

Off Isolation
A measure of unwanted signal coupling through an off channel.

Charge Injection
A measure of the glitch impulse transferred from the digital input to the analog output during switching.

Bandwidth
The frequency at which the output is attenuated by 3 dB.

On Response
The frequency response of the on switch.

Total Harmonic Distortion Plus Noise (THD + N)
The ratio of the harmonic amplitude plus noise of the signal to the fundamental.

TEST CIRCUITS

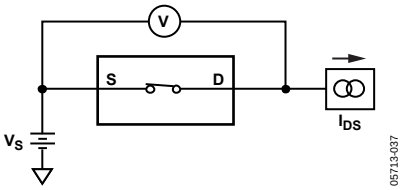

Figure 31. On Resistance

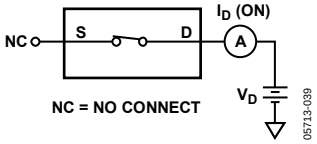

Figure 33. On Leakage

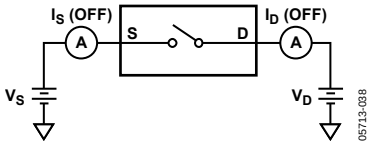

Figure 32. Off Leakage

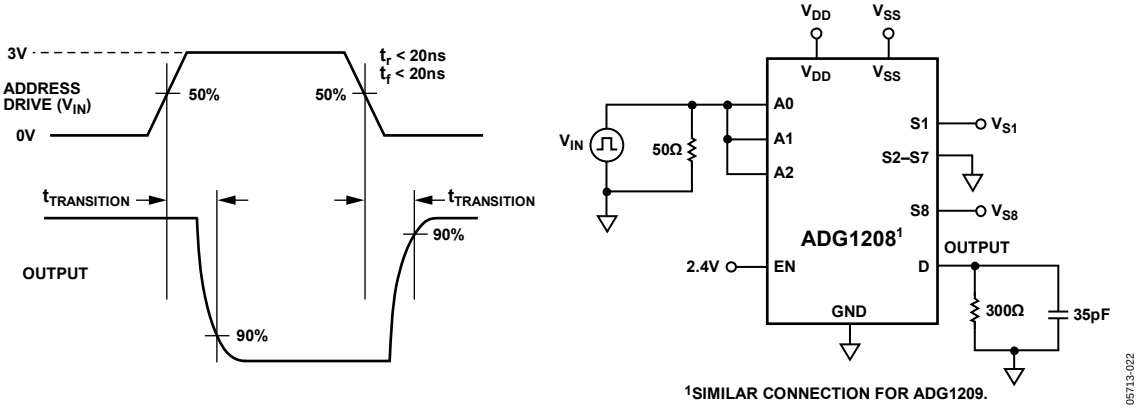

Figure 34. Address to Output Switching Times, $t_{TRANSITION}$

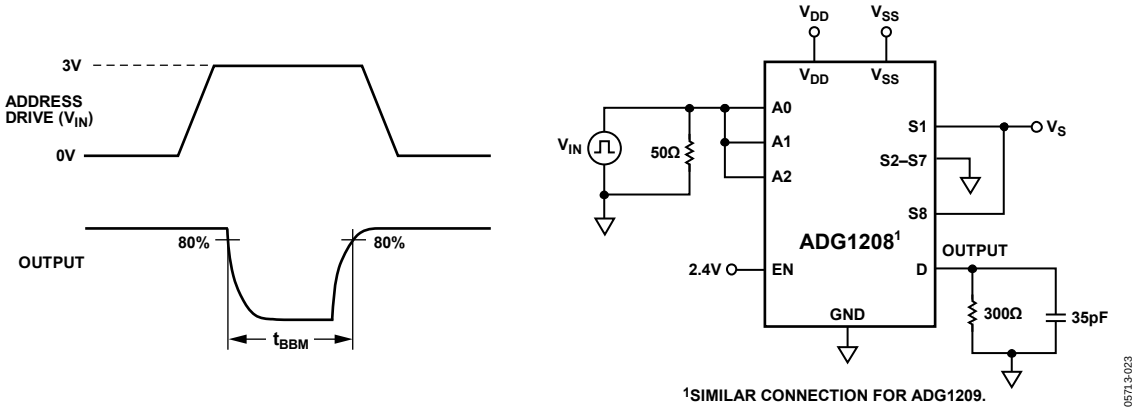

Figure 35. Break-Before-Make Delay, t_{BBM}

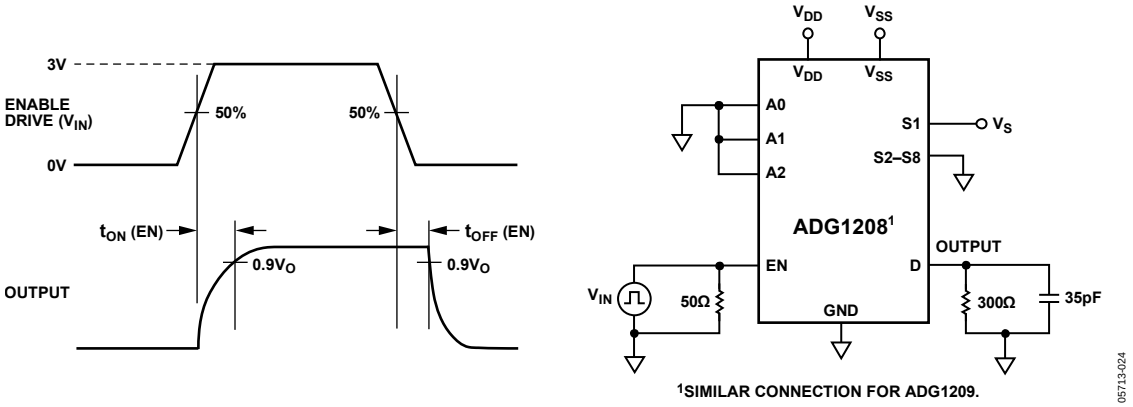

Figure 36. Enable Delay, t_{ON} (EN), t_{OFF} (EN)

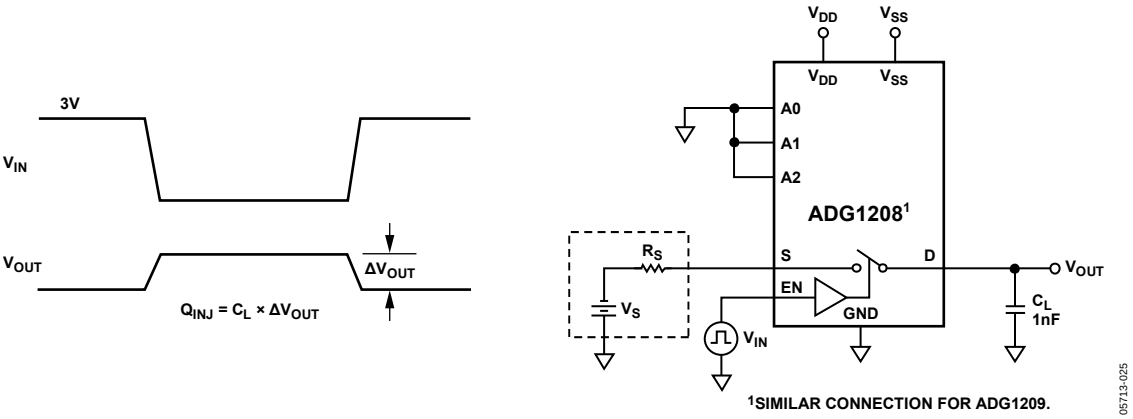

Figure 37. Charge Injection

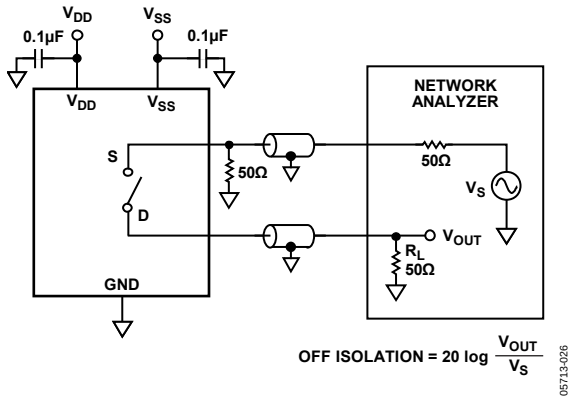

Figure 38. Off Isolation

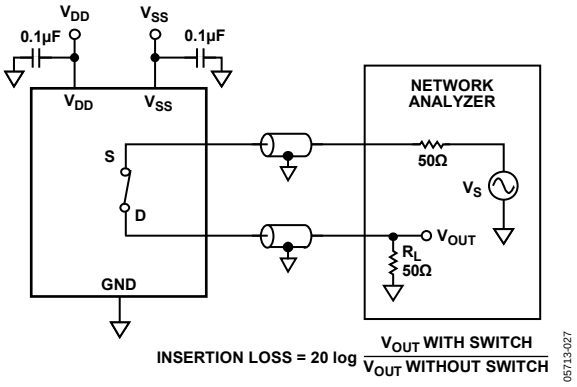

Figure 39. Bandwidth

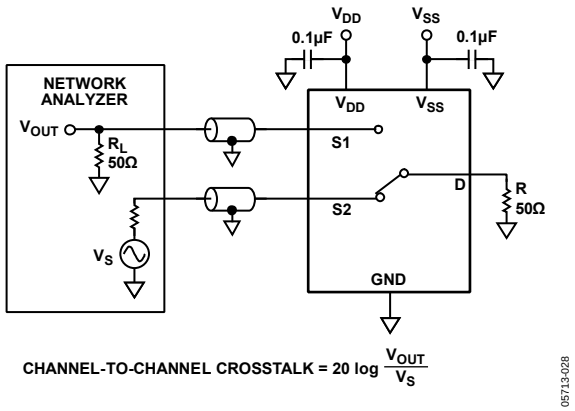

Figure 40. Channel to Channel Crosstalk

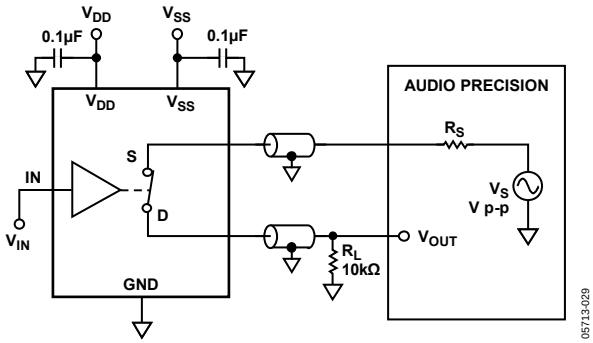

Figure 41. THD + N

OUTLINE DIMENSIONS

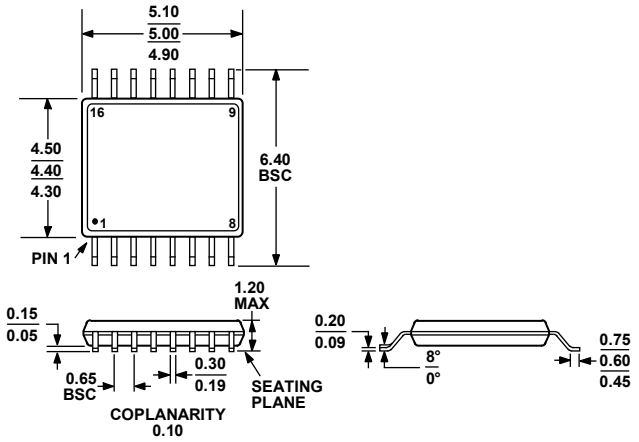

COMPLIANT TO JEDEC STANDARDS MO-153-AB

Figure 42. 16-Lead Thin Shrink Small Outline Package [TSSOP] (RU-16)
Dimensions shown in millimeters

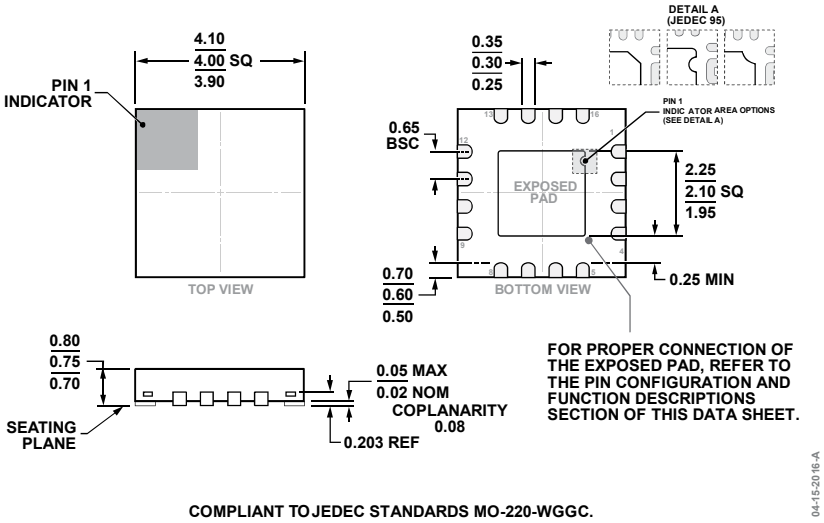

COMPLIANT TO JEDEC STANDARDS MO-220-WGGC.

Figure 43. 16-Lead Lead Frame Chip Scale Package [LFCSP] 4 mm × 4 mm Body and 0.75 mm Package Height (CP-16-23)
Dimensions shown in millimeters

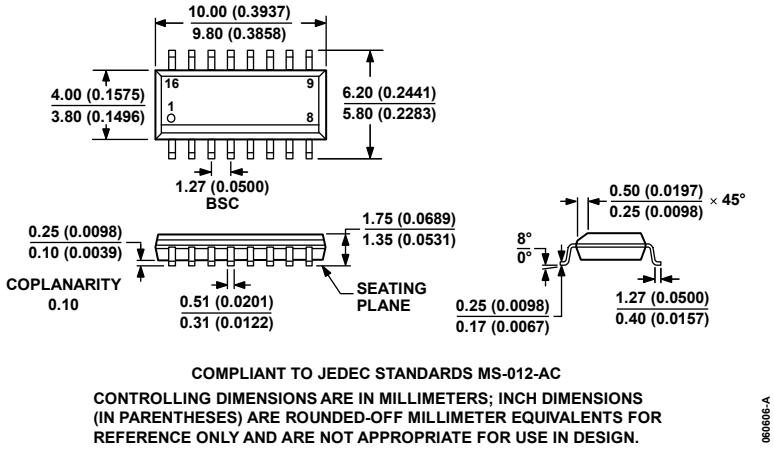

Figure 44. 16-Lead Standard Small Outline Package [SOIC_N]
Narrow Body (R-16)
Dimensions shown in millimeters and (inches)

ORDERING GUIDE

Model[1]	Temperature Range	Package Description	Package Option
ADG1208YRUZ	−40°C to +125°C	16-Lead Thin Shrink Small Outline Package [TSSOP]	RU-16
ADG1208YRUZ-REEL7	−40°C to +125°C	16-Lead Thin Shrink Small Outline Package [TSSOP]	RU-16
ADG1208YCPZ-REEL	−40°C to +125°C	16-Lead Lead Frame Chip Scale Package [LFCSP]	CP-16-23
ADG1208YCPZ-REEL7	−40°C to +125°C	16-Lead Lead Frame Chip Scale Package [LFCSP]	CP-16-23
ADG1208YRZ	−40°C to +125°C	16-Lead Narrow Body Small Outline Package [SOIC_N]	R-16
ADG1208YRZ-REEL7	−40°C to +125°C	16-Lead Narrow Body Small Outline Package [SOIC_N]	R-16
ADG1209YRUZ	−40°C to +125°C	16-Lead Thin Shrink Small Outline Package [TSSOP]	RU-16
ADG1209YRUZ-REEL7	−40°C to +125°C	16-Lead Thin Shrink Small Outline Package [TSSOP]	RU-16
ADG1209YCPZ-REEL7	−40°C to +125°C	16-Lead Lead Frame Chip Scale Package [LFCSP]	CP-16-23
ADG1209YRZ	−40°C to +125°C	16-Lead Narrow Body Small Outline Package [SOIC_N]	R-16
ADG1209YRZ-REEL7	−40°C to +125°C	16-Lead Narrow Body Small Outline Package [SOIC_N]	R-16

[1] Z = RoHS Compliant Part.

©2006–2016 Analog Devices, Inc. All rights reserved. Trademarks and registered trademarks are the property of their respective owners.
D05713-0-6/16(E)

ООО «ЛайфЭлектроникс» “LifeElectronics” LLC

ИНН 7805602321 КПП 780501001 Р/С 40702810122510004610 ФАКБ "АБСОЛЮТ БАНК" (ЗАО) в г.Санкт-Петербурге К/С 30101810900000000703 БИК 044030703

Компания «Life Electronics» занимается поставками электронных компонентов импортного и отечественного производства от производителей и со складов крупных дистрибьюторов Европы, Америки и Азии.

С конца 2013 года компания активно расширяет линейку поставок компонентов по направлению коаксиальный кабель, кварцевые генераторы и конденсаторы (керамические, пленочные, электролитические), за счёт заключения дистрибьюторских договоров

Мы предлагаем:

- *Конкурентоспособные цены и скидки постоянным клиентам.*
- *Специальные условия для постоянных клиентов.*
- *Подбор аналогов.*
- *Поставку компонентов в любых объемах, удовлетворяющих вашим потребностям.*

- *Приемлемые сроки поставки, возможна ускоренная поставка.*
- *Доставку товара в любую точку России и стран СНГ.*
- *Комплексную поставку.*
- *Работу по проектам и поставку образцов.*
- *Формирование склада под заказчика.*

- *Сертификаты соответствия на поставляемую продукцию (по желанию клиента).*
- *Тестирование поставляемой продукции.*
- *Поставку компонентов, требующих военную и космическую приемку.*
- *Входной контроль качества.*
- *Наличие сертификата ISO.*

В составе нашей компании организован Конструкторский отдел, призванный помогать разработчикам, и инженерам.

Конструкторский отдел помогает осуществить:

- *Регистрацию проекта у производителя компонентов.*
- *Техническую поддержку проекта.*
- *Защиту от снятия компонента с производства.*
- *Оценку стоимости проекта по компонентам.*
- *Изготовление тестовой платы монтаж и пусконаладочные работы.*

Тел: +7 (812) 336 43 04 (многоканальный)
Email: org@lifeelectronics.ru

www.lifeelectronics.ru