COSEL AC-DC Power Supplies Enclosed Type

FETA2500BA

Ordering information

FET	A	2500	B	A	-□□	-□
①	②	③	④	⑤	⑥	⑦

Example recommended EMI/EMC filter
NAC-20-472

High voltage pulse noise type : NAP series
Low leakage current type : NAM series

*A higher current rating EMI/EMC filter may be recommended in view of the other devices that could be connected in parallel with the power supply.

①Series name
②Single output
③Output wattage
④200/230V input
⑤Version
⑥Output voltage
⑦Optional
F2: Reverse air exhaust
R: with Remote ON/OFF Positive logic control

*Make sure necessary tests will be carried out on your end equipment with the power supply installed in accordance with any required EMC/EMI regulations.

MODEL		FETA2500BA-36	FETA2500BA-48
MAX OUTPUT WATTAGE[W]	*1	1980	2496
DC OUTPUT		36V 55A	48V 52A

SPECIFICATIONS

	MODEL		FETA2500BA-36	FETA2500BA-48
INPUT	VOLTAGE[V]		AC170 - 264 1 φ (Output derating is required at AC170V - 180V. Refer to Derating)	
	CURRENT[A]	ACIN 200V	11.3typ	13.8typ
	FREQUENCY[Hz]		50 / 60 (47 - 63)	
	EFFICIENCY[%]	ACIN 230V	80typ (Io=10%)	83typ (Io=10%)
			87typ (Io=20%)	89typ (Io=20%)
			91typ (Io=50%)	92.5typ (Io=50%)
			90typ (Io=100%)	91.5typ (Io=100%)
	POWER FACTOR	ACIN 230V	0.98typ (Io=100%)	
	INRUSH CURRENT[A]	ACIN 200V *2	20max / 60max (Primary inrush current /Secondary inrush current) (More than 10 sec. to re-start)	
	LEAKAGE CURRENT[mA]		0.85max (ACIN 240V 60Hz, Io=100%, According to IEC62368-1)	
OUTPUT	VOLTAGE[V]		36	48
	CURRENT[A]	ACIN 170V-180V	Output derating is required at ACIN 180V or less (refer to Derating)	
		ACIN 180V-264V	55	52
	LINE REGULATION[mV]		144max	192max
	LOAD REGULATION[mV]		360max	480max
	RIPPLE[mVp-p]	0 to +50℃ *3	300max	360max
		-10 to 0℃ *3	360max	480max
	RIPPLE NOISE[mVp-p]	0 to +50℃ *3	360max	480max
		-10 to 0℃ *3	480max	600max
	TEMPERATURE REGULATION[mV]	0 to +50℃	360max	480max
		-10 to +50℃	440max	600max
	DRIFT[mV]	*4	144max	192max
	START-UP TIME[s]		1.7max (ACIN 200V, Io=100%)	
	HOLD-UP TIME[ms]	ACIN 200V	10typ (Io=100%)	
			20typ (Io=50%)	
	OUTPUT VOLTAGE ADJUSTMENT RANGE[V] *5		28.80 - 39.60	38.40 - 52.80 *6
	OUTPUT VOLTAGE SETTING[V]		36.00 - 37.44	48.00 - 49.92
PROTECTION CIRCUIT AND OTHERS	OVERCURRENT PROTECTION		Activate over 105% - 120% of rated current and recovers automatically. (Output voltage shuts down when the output voltage continuously drops due to overcurrent protection.) *7	
	OVERVOLTAGE PROTECTION[V]	*7	42.00 - 45.00	56.00 - 60.00
	DC_OK LAMP		LED (Green)	
	ALARM LAMP		LED (Amber)	
	REMOTE ON/OFF		Provided	
ISOLATION	INPUT-OUTPUT·AUX·RC·WRN·PG		AC3,000V 1minute, Cutoff current = 25mA, DC500V 50MΩ min (At room temperature)	
	INPUT-FG		AC2,000V 1minute, Cutoff current = 25mA, DC500V 50MΩ min (At room temperature)	
	OUTPUT·AUX·RC·WRN·PG-FG		AC500V 1minute, Cutoff current = 100mA, DC500V 50MΩ min (At room temperature)	
	OUTPUT-AUX·RC·WRN·PG		AC100V 1minute, Cutoff current = 100mA, DC100V 50MΩ min (At room temperature)	
ENVIRONMENT	OPERATING TEMP.,HUMID.AND ALTITUDE		-10 to +70℃ (Output derating is required), 20 - 90%RH (Non condensing), 3,000m (10,000 feet) max	
	STORAGE TEMP.,HUMID.AND ALTITUDE		-20 to +85℃, 20 - 90%RH (Non condensing), 9,000m (30,000 feet) max	
	VIBRATION		10 - 55Hz, 19.6m/s² (2G), 3minutes period, 60minutes each along X, Y and Z axis	
	IMPACT		196.1m/s² (20G), 11ms, once each along X, Y and Z axis	
SAFETY AND NOISE REGULATIONS	AGENCY APPROVALS		UL62368-1, C-UL (CSA62368-1), EN62368-1	
	CONDUCTED NOISE		Complies with FCC Part 15-A, CISPR32-A, EN55032-A, VCCI-A	
	HARMONIC ATTENUATOR		Complies with IEC61000-3-2 Class A *8	
OTHERS	CASE SIZE/WEIGHT	*9	102×41×340mm [4.02×1.61×13.39 inches] (W×H×D) / 2.3kg max	
	COOLING METHOD		Forced cooling (internal fan)	

*1 AUX output power is not included.
*2 The current of input surge to a built-in noise filter (0.2ms or less) is excluded.
*3 Measured by 500MHz oscilloscope.
Ripple and ripple noise is measured on measuring board with capacitor of 22μF within 150mm from the output terminal.
*4 Drift is the change in DC output for an eight hour period after a half-hour warm-up at 25℃, with the input voltage held constant at the rated input/output.
*5 Can't be used above the rated output current and the rated output power.
*6 When the output voltage is adjusted to higher than 49.92V and the load factor is over 70% of the rated current, if the load current changes quickly (< 200msec), the output voltage drops approximately 5V below the setting voltage.
*7 Output voltage recovers from protection by shutting down the input voltage and waiting more than 10 seconds then turning on AC input again, or turning off the output voltage by remote control.
*8 Please contact us about another class.
*9 Case size contains neither the terminal blocks, connector and screw.
* To meet the specifications, do not operate over-loaded condition.
* A sound may occur from power supply at peak loading.

Block diagram

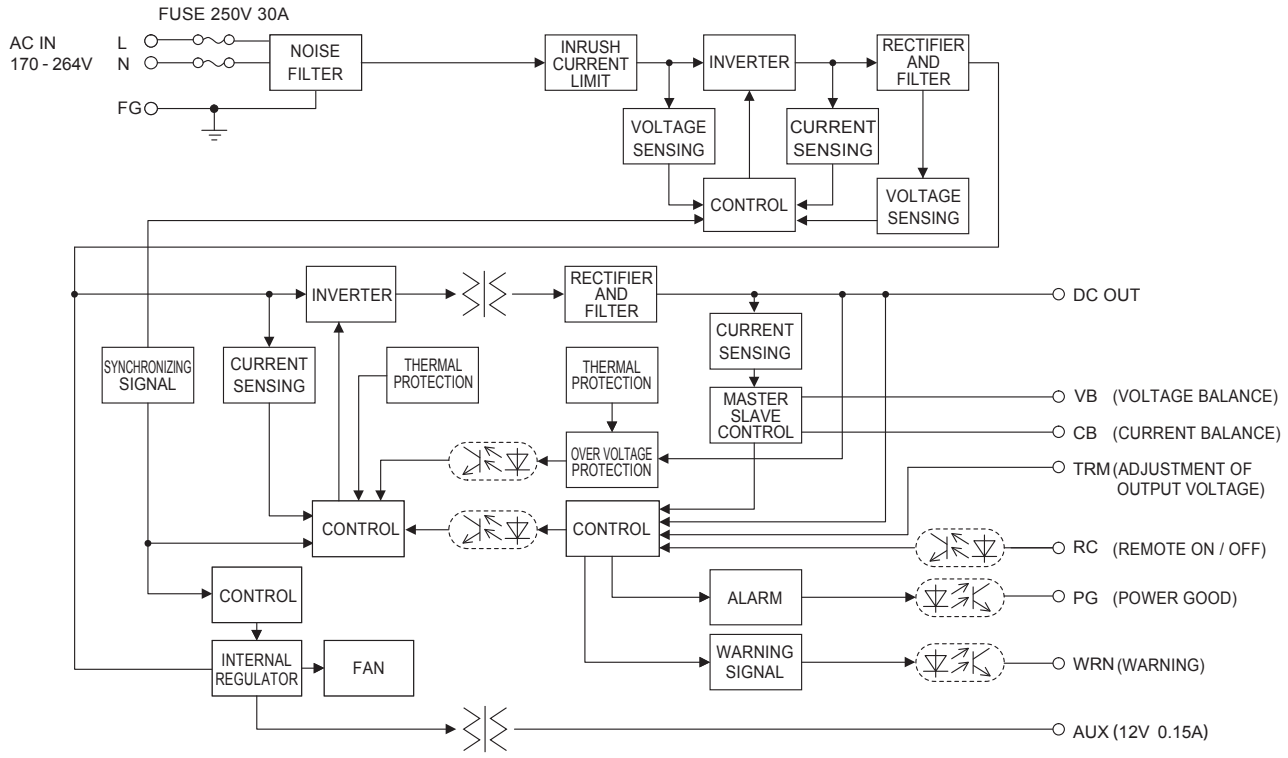

External view

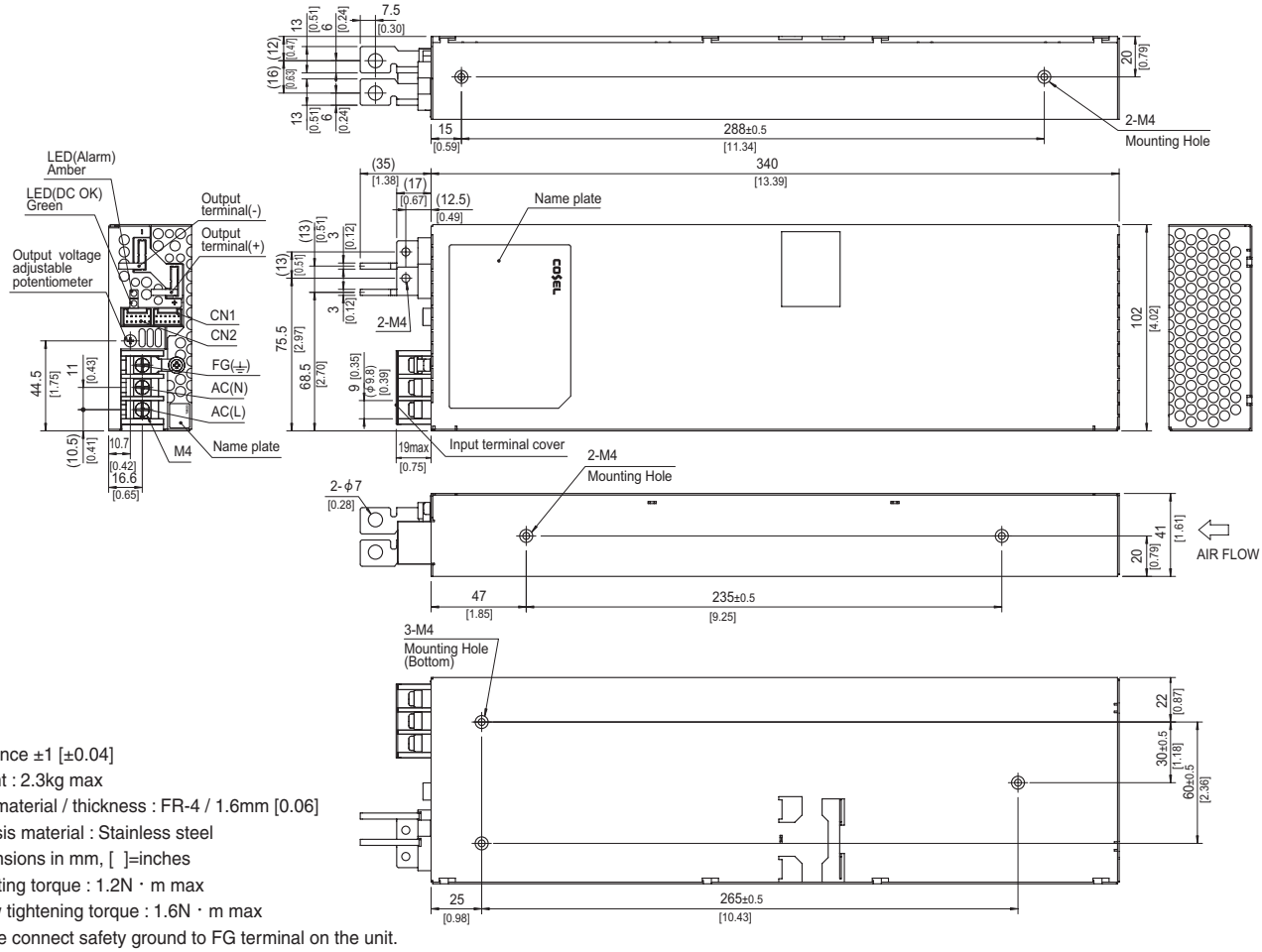

- ✻ Tolerance ±1 [±0.04]
- ✻ Weight : 2.3kg max
- ✻ PCB material / thickness : FR-4 / 1.6mm [0.06]
- ✻ Chassis material : Stainless steel
- ✻ Dimensions in mm, [ ]=inches
- ✻ Maunting torque : 1.2N・m max
- ✻ Screw tightening torque : 1.6N・m max
- ✻ Please connect safety ground to FG terminal on the unit.

COSEL AC-DC Power Supplies Enclosed Type

FETA3000BA

Ordering information

FET	A	3000	B	A	-□□	-□
①	②	③	④	⑤	⑥	⑦

Example recommended EMI/EMC filter
NAC-20-472

High voltage pulse noise type : NAP series
Low leakage current type : NAM series

∗A higher current rating EMI/EMC filter may be recommended in view of the other devices that could be connected in parallel with the power supply.

①Series name
②Single output
③Output wattage
④200/230V input
⑤Version
⑥Output voltage
⑦Optional
R: with Remote ON/OFF Positive logic control

∗Make sure necessary tests will be carried out on your end equipment with the power supply installed in accordance with any required EMC/EMI regulations.

MODEL		FETA3000BA-48
MAX OUTPUT WATTAGE[W]	∗1	2976
DC OUTPUT		48V 62A

SPECIFICATIONS

	MODEL		FETA3000BA-48
INPUT	VOLTAGE[V]		AC170 - 264 1 ϕ (Output derating is required at AC170V - 180V. Refer to Derating)
	CURRENT[A]	ACIN 200V	16.6typ
	FREQUENCY[Hz]		50 / 60 (47 - 63)
	EFFICIENCY[%]	ACIN 230V	82typ (Io=10%)
			90typ (Io=20%)
			93typ (Io=50%)
			91.5typ (Io=100%)
	POWER FACTOR	ACIN 230V	0.98typ (Io=100%)
	INRUSH CURRENT[A]	ACIN 200V ∗2	20max / 80max (Primary inrush current /Secondary inrush current) (More than 10 sec. to re-start)
	LEAKAGE CURRENT[mA]		0.85max (ACIN 240V 60Hz, Io=100%, According to IEC62368-1)
OUTPUT	VOLTAGE[V]		48
	CURRENT[A]	ACIN 170V-180V	Output derating is required at ACIN 180V or less (refer to Derating)
		ACIN 180V-264V	62
	LINE REGULATION[mV]		192max
	LOAD REGULATION[mV]		480max
	RIPPLE[mVp-p]	0 to +50℃ ∗3	360max (Vo=15 - 52.8[V]) ∗4
		-10 to 0℃ ∗3	480max (Vo=15 - 52.8[V]) ∗4
	RIPPLE NOISE[mVp-p]	0 to +50℃ ∗3	600max (Vo=15 - 52.8[V]) ∗4
		-10 to 0℃ ∗3	720max (Vo=15 - 52.8[V]) ∗4
	TEMPERATURE REGULATION[mV]	0 to +50℃	480max
		-10 to +50℃	600max
	DRIFT[mV]	∗4	192max
	START-UP TIME[s]	∗5	1.7max (ACIN 200V, Io=100%)
	HOLD-UP TIME[ms]	ACIN 200V	10typ (Io=100%)
			20typ (Io=50%)
	OUTPUT VOLTAGE ADJUSTMENT RANGE[V]	∗6	38.40 - 52.80
	OUTPUT VOLTAGE SETTING[V]		48.00 - 49.00
PROTECTION CIRCUIT AND OTHERS	OVERCURRENT PROTECTION		Activate over 105% - 120% of rated current and recovers automatically. (Output voltage shuts down when the output voltage continuously drops due to overcurrent protection.) ∗7
	OVERVOLTAGE PROTECTION[V]	∗7	56.00 - 60.00
	DC_OK LAMP		LED (Green)
	ALARM LAMP		LED (Amber)
	REMOTE ON/OFF		Provided
ISOLATION	INPUT–OUTPUT·AUX·RC·WRN·PG		AC3,000V 1minute, Cutoff current = 25mA, DC500V 50MΩ min (At room temperature)
	INPUT–FG		AC2,000V 1minute, Cutoff current = 25mA, DC500V 50MΩ min (At room temperature)
	OUTPUT·AUX·RC·WRN·PG–FG		AC500V 1minute, Cutoff current = 100mA, DC500V 50MΩ min (At room temperature)
	OUTPUT–AUX·RC·WRN·PG		AC100V 1minute, Cutoff current = 100mA, DC100V 50MΩ min (At room temperature)
ENVIRONMENT	OPERATING TEMP.,HUMID.AND ALTITUDE		-10 to +70℃ (Output derating is required), 20 - 90%RH (Non condensing), 3,000m (10,000 feet) max
	STORAGE TEMP.,HUMID.AND ALTITUDE		-20 to +85℃, 20 - 90%RH (Non condensing), 9,000m (30,000 feet) max
	VIBRATION		10 - 55Hz, 19.6m/s² (2G), 3minutes period, 60minutes each along X, Y and Z axis
	IMPACT		196.1m/s² (20G), 11ms, once each along X, Y and Z axis
SAFETY AND NOISE REGULATIONS	AGENCY APPROVALS		UL62368-1, C-UL (CSA62368-1), EN62368-1
	CONDUCTED NOISE		Complies with FCC Part 15-A, CISPR32-A, EN55032-A, VCCI-A
	HARMONIC ATTENUATOR		Complies with IEC61000-3-2 Class A ∗8
OTHERS	CASE SIZE/WEIGHT	∗9	102×41×340mm [4.02×1.61×13.39 inches] (W×H×D) / 2.3kg max
	COOLING METHOD		Forced cooling (internal fan)

∗1 AUX output power is not included.
∗2 The current of input surge to a built-in noise filter (0.2ms or less) is excluded.
∗3 Measured by 500MHz oscilloscope. Ripple and ripple noise is measured on measuring board with capacitor of 22μF within 150mm from the output terminal.
∗4 The output voltage should not be adjusted to 15V or less because the ripple and ripple noise would be out of specs and the unit would make the audible noise.
∗5 Drift is the change in DC output for an eight hour period after a half-hour warm-up at 25℃, with the input voltage held constant at the rated input/output.
∗6 Can't be used above the rated output current and the rated output power.
∗7 Output voltage recovers from protection by shutting down the input voltage and waiting more than 10 seconds then turning on AC input again, or turning off the output voltage by remote control.
∗8 Please contact us about another class.
∗9 Case size contains neither the terminal blocks, connector and screw.
∗ To meet the specifications, do not operate over-loaded condition.
∗ A sound may occur from power supply at peak loading.

Block diagram

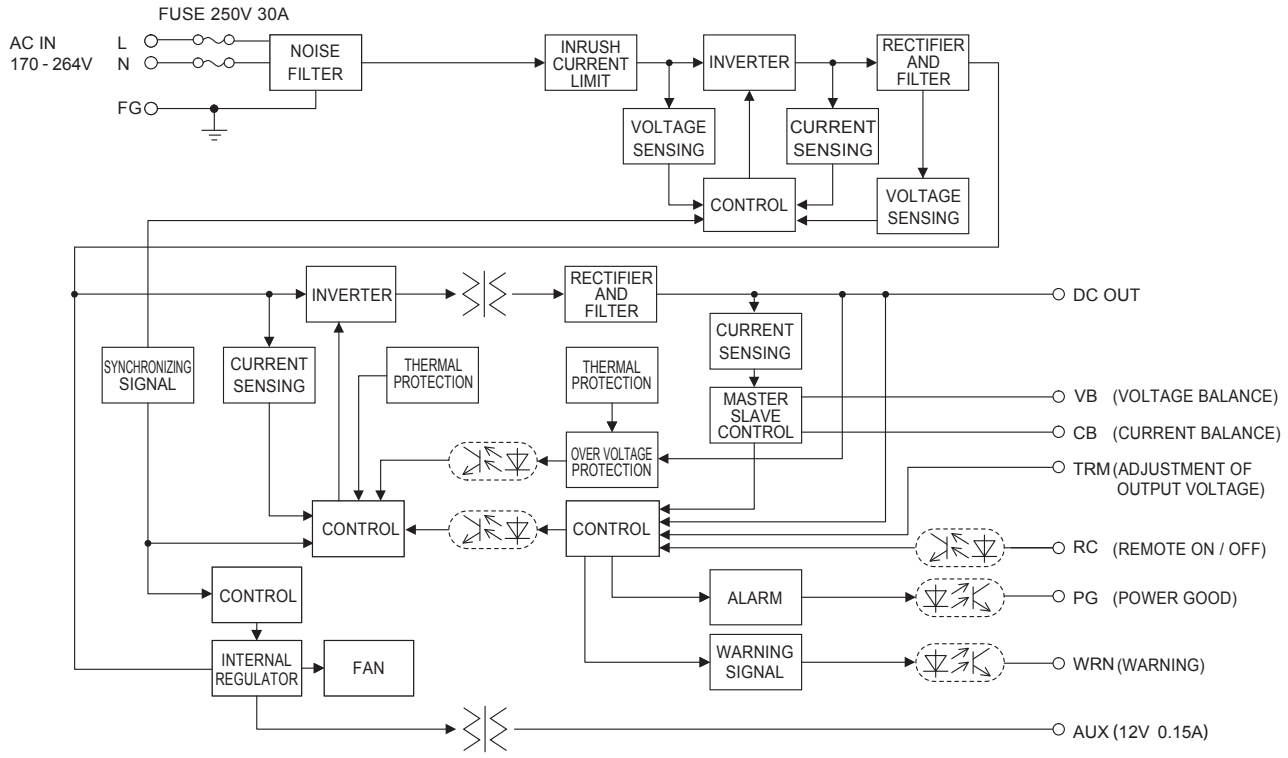

External view

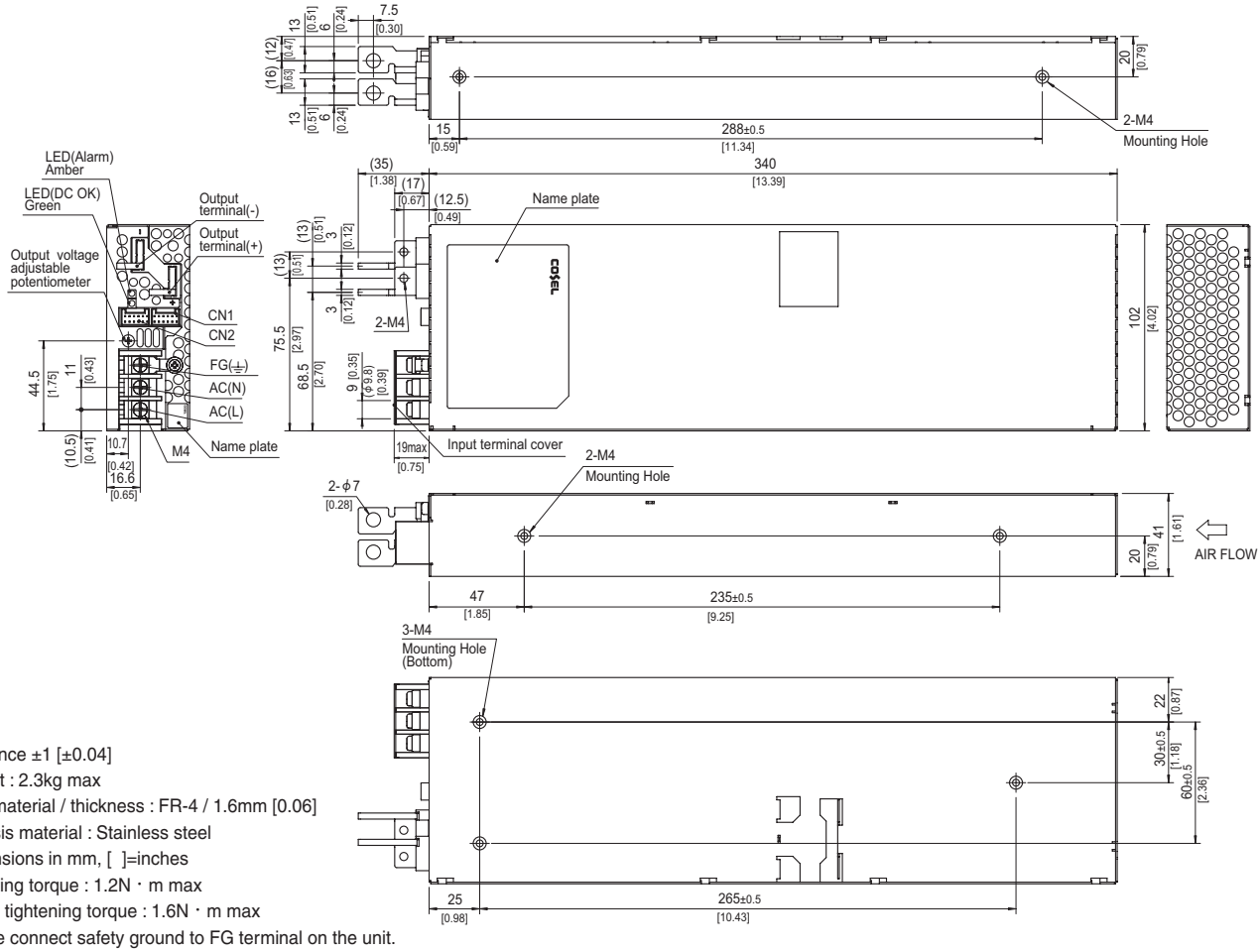

- ✻ Tolerance ±1 [±0.04]
- ✻ Weight : 2.3kg max
- ✻ PCB material / thickness : FR-4 / 1.6mm [0.06]
- ✻ Chassis material : Stainless steel
- ✻ Dimensions in mm, [ ]=inches
- ✻ Maunting torque : 1.2N・m max
- ✻ Screw tightening torque : 1.6N・m max
- ✻ Please connect safety ground to FG terminal on the unit.

COSEL AC-DC Power Supplies Enclosed Type

FETA7000T

Ordering information

FET A 7000 T -□□

① ② ③ ④ ⑤

①Series name
②Single output
③Output wattage
④Triple input phase
⑤Output voltage

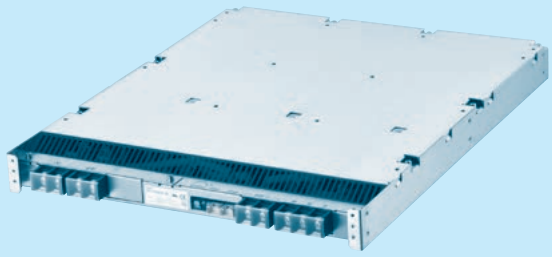

Example recommended EMI/EMC filter
TAC-30-683

＊A higher current rating EMI/EMC filter may be recommended in view of the other devices that could be connected in parallel with the power supply.

＊Make sure necessary tests will be carried out on your end equipment with the power supply installed in accordance with any required EMC/EMI regulations.

MODEL	FETA7000T-48	FETA7000T-144
MAX OUTPUT WATTAGE[W] ＊1	7113	7488
DC OUTPUT	48V 148.2A	144V 52A

SPECIFICATIONS

	MODEL		FETA7000T-48	FETA7000T-144
INPUT	VOLTAGE[V]		AC170 - 264 3φ (Output derating is required at AC170V - 180V. Refer to Derating)	
	CURRENT[A]	ACIN 200V	22.7typ	23.9typ
	FREQUENCY[Hz]		50 / 60 (47 - 63)	
	EFFICIENCY[%]	ACIN 230V	90.5% (Io=100%)	90.5% (Io=100%)
	POWER FACTOR	ACIN 230V	0.98typ (Io=100%)	
	INRUSH CURRENT[A]	ACIN 200V ＊2	30max / 60max (Primary inrush current /Secondary inrush current) (More than 10 sec. to re-start)	
	LEAKAGE CURRENT[mA]		3.0max (ACIN 240V 60Hz, Io=100%, According to IEC62368-1)	
OUTPUT	VOLTAGE[V]		48	144
	CURRENT[A]	ACIN 170V-180V	Output derating is required at ACIN 180V or less (refer to Derating)	
		ACIN 180V-264V	148.2	52
	LINE REGULATION[mV]		192max	360max
	LOAD REGULATION[mV]		960max	1800max
	RIPPLE[mVp-p]	0 to +40℃ ＊3	360max	720max
		-10 to 0℃ ＊3	480max	960max
	RIPPLE NOISE[mVp-p]	0 to +40℃ ＊3	480max	960max
		-10 to 0℃ ＊3	600max	1200max
	TEMPERATURE REGULATION[mV]	0 to +40℃	480max	2200max
		-10 to +40℃	600max	2800max
	DRIFT[mV]	＊4	192max	384max
	START-UP TIME[s]		1.7max (ACIN 200V, Io=100%)	
	HOLD-UP TIME[ms]	ACIN 200V	10typ (Io=100%)	
			20typ (Io=50%)	
	OUTPUT VOLTAGE ADJUSTMENT RANGE[V] ＊5		28.8 - 52.8 ＊6	86.4 - 158.4 ＊7
	OUTPUT VOLTAGE SETTING[V]		47 - 49	141 - 147
PROTECTION CIRCUIT AND OTHERS	OVERCURRENT PROTECTION		Works over 105% of rating (Recovers automatically, Hiccup overcurrent) (Output voltage shuts down when the output voltage continuously drops due to overcurrent protection.) ＊8	
	OVERVOLTAGE PROTECTION[V]	＊8	56 - 60	168 - 180
	DC_OK LAMP		LED (Green)	
	ALARM LAMP		LED (Amber)	
	REMOTE ON/OFF		Provided	
ISOLATION	INPUT-OUTPUT·AUX·RC·WRN·PG		AC3,000V 1minute, Cutoff current = 100mA, DC500V 50MΩ min (At room temperature)	
	INPUT-FG		AC2,000V 1minute, Cutoff current = 100mA, DC500V 50MΩ min (At room temperature)	
	OUTPUT·AUX·RC·WRN·PG-FG		AC500V 1minute, Cutoff current = 100mA, DC500V 50MΩ min (At room temperature)	
	OUTPUT-AUX·RC·WRN·PG		AC100V 1minute, Cutoff current = 100mA, DC100V 50MΩ min (At room temperature)	
ENVIRONMENT	OPERATING TEMP.,HUMID.AND ALTITUDE		-10 to +60℃ (Output derating is required), 20 - 90%RH (Non condensing), 3,000m (10,000 feet) max	
	STORAGE TEMP.,HUMID.AND ALTITUDE		-20 to +75℃, 20 - 90%RH (Non condensing), 9,000m (30,000 feet) max	
	VIBRATION		10 - 55Hz, 19.6m/s² (2G), 3minutes period, 60minutes each along X, Y and Z axis	
	IMPACT		196.1m/s² (20G), 11ms, once each along X, Y and Z axis	
SAFETY AND NOISE REGULATIONS	AGENCY APPROVALS		UL62368-1, C-UL (CSA62368-1), EN62368-1	
	CONDUCTED NOISE		Complies with FCC Part15-A, CISPR32-A, EN55032-A, VCCI-A	
	HARMONIC ATTENUATOR		Complies with IEC61000-3-12	
OTHERS	CASE SIZE/WEIGHT	＊9	388×43×475mm [15.28×1.69×18.70 inches] (W×H×D) / 11kg max	
	COOLING METHOD		Forced cooling (internal fan)	

＊1 AUX output power is not included.
＊2 The current of input surge to a built-in noise filter (0.2ms or less) is excluded.
＊3 Measured by 500MHz oscilloscope.
Ripple and ripple noise is measured on measuring board with capacitor of 22μF within 150mm from the output terminal.
＊4 Drift is the change in DC output for an eight hour period after a half-hour warm-up at 25℃, with the input voltage held constant at the rated input/output.
＊5 Can't be used above the rated output current and the rated output power.
＊6 When the output voltage is adjusted to higher than 49.92V and the load factor is over 70% of the rated current, if the load current changes quickly (< 200msec), the output voltage drops approximately 5V below the setting voltage.
＊7 When the output voltage is adjusted to higher than 149.82V and the load factor is over 70% of the rated current, if the load current changes quickly (<200msec), the output voltage drops approximately 15V below the setting voltage.
＊8 Output voltage recovers from protection by shutting down the input voltage and waiting more than 10 seconds then turning on AC input again, or turning off the output voltage by remote control.
＊9 Case size contains neither the terminal blocks, connector and screw.
＊ To meet the specifications, do not operate over-loaded condition.
＊ A sound may occur from power supply at peak loading.

Block diagram

●FETA7000T-48

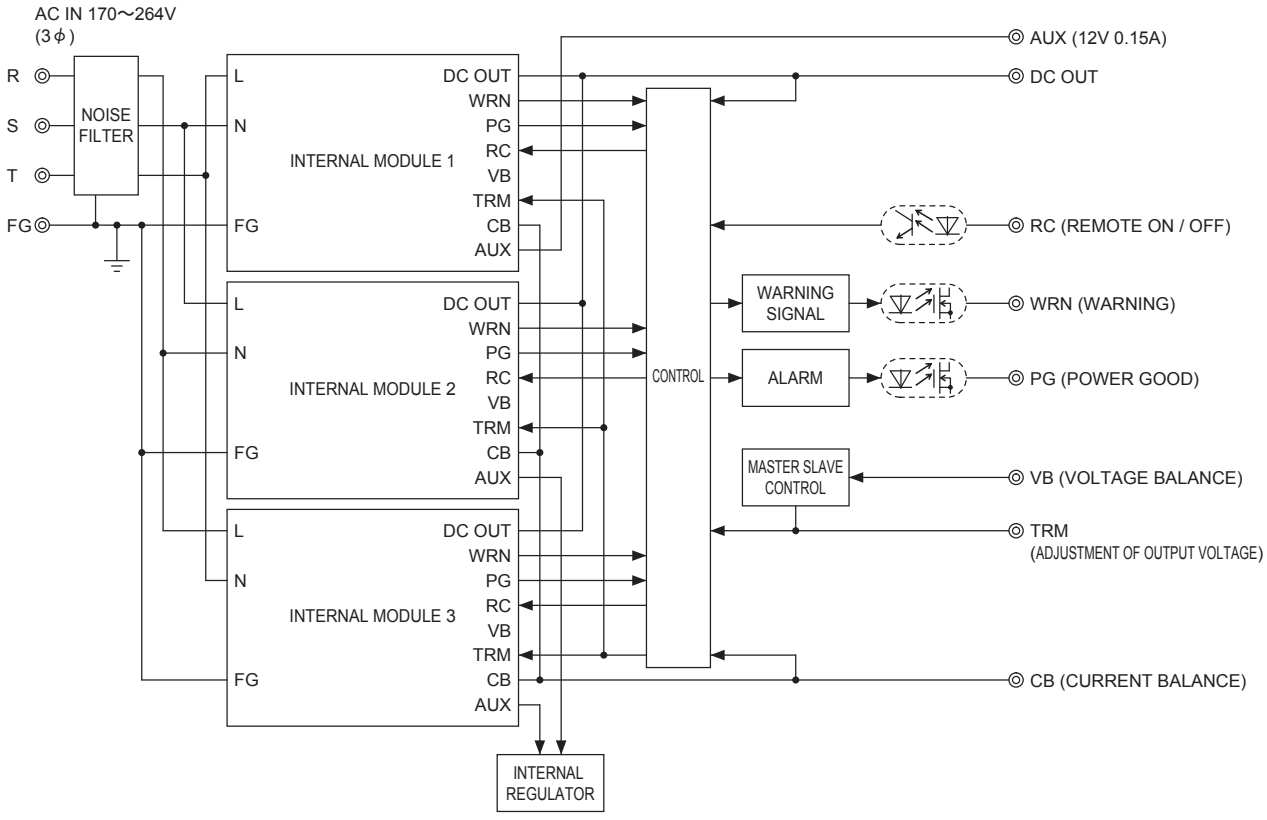

●FETA7000T-144

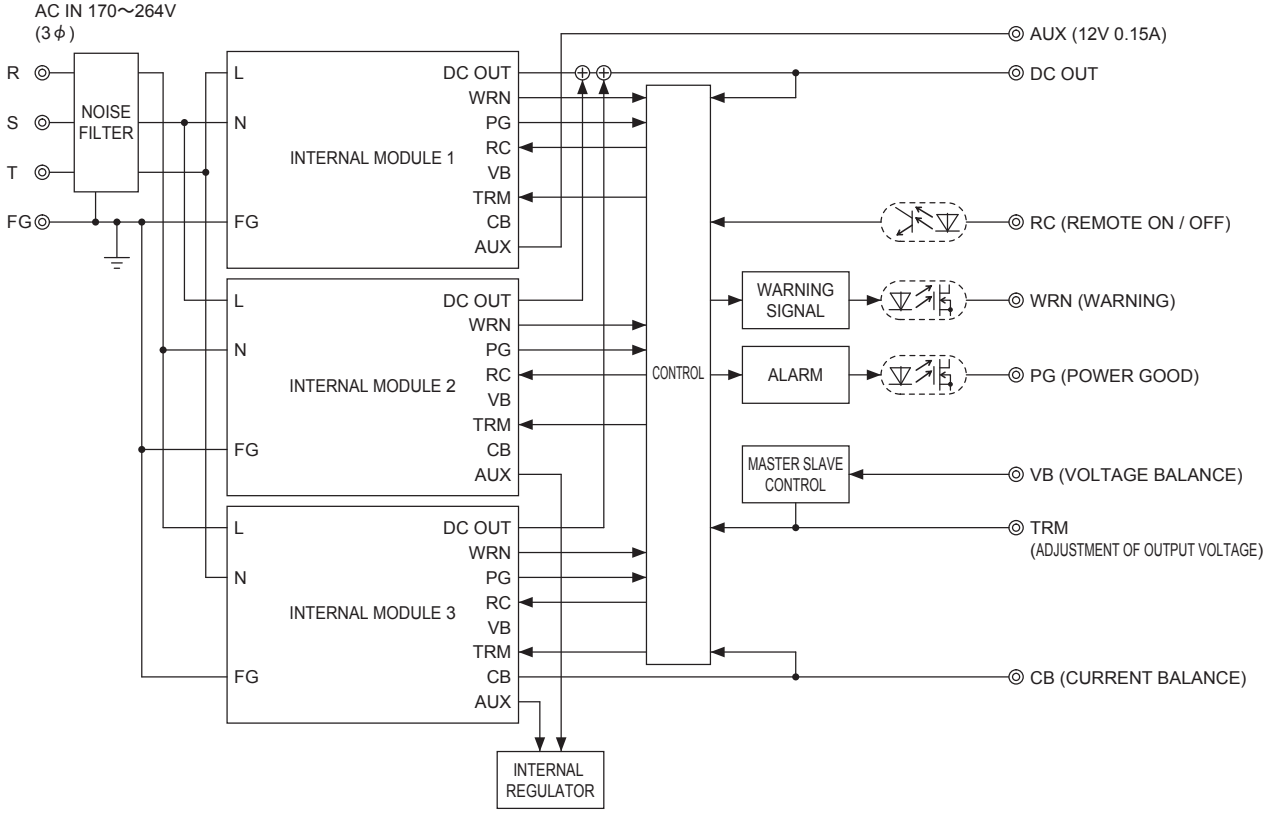

Block diagram of internal module

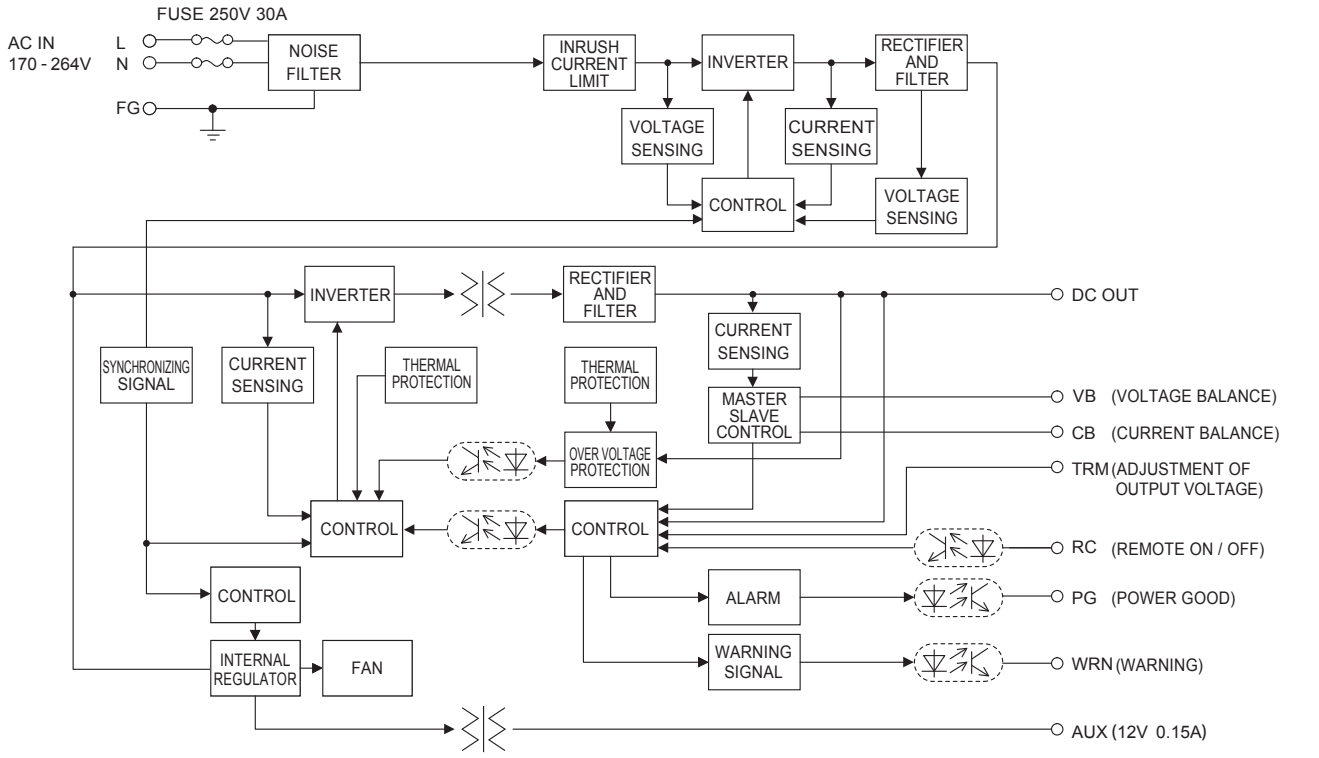

External view

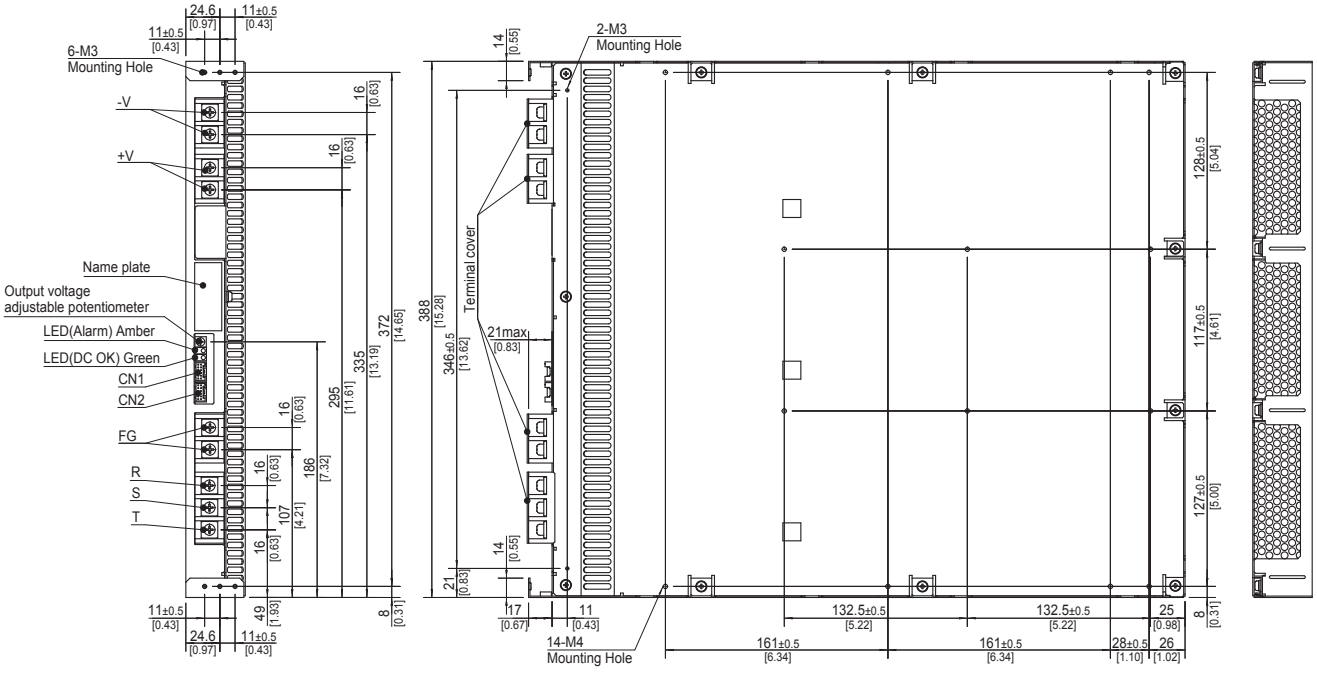

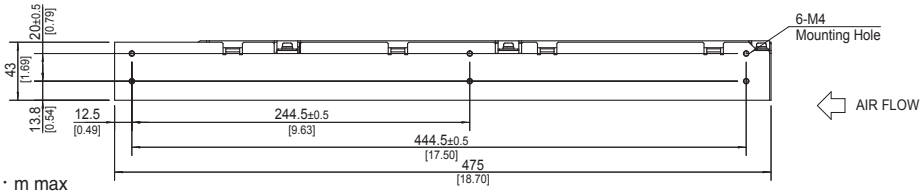

- ∗ Tolerance ±1 [±0.04]
- ∗ Weight : 11kg max
- ∗ PCB material / thickness : FR-4 / 1.6mm [0.06]
- ∗ Chassis material : Stainless steel
- ∗ Dimensions in mm, [ ]=inches
- ∗ Screw tightening torque : M3 Mounting Hole 0.6N・m max
  M4 Mounting Hole 1.2N・m max
  M5 Input terminal 3.0N・m max
- ∗ Please connect safety ground to FG terminal on the unit.

COSEL AC-DC Power Supplies Enclosed Type

FETA7000ST

Ordering information

FET A 7000 ST -□□
① ② ③ ④ ⑤

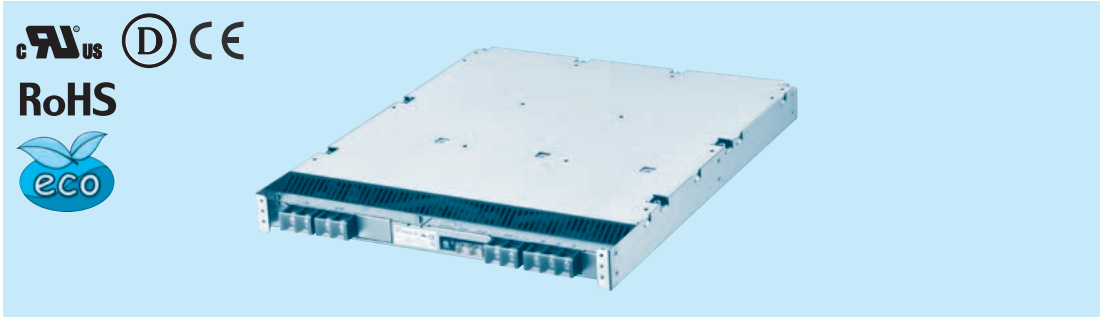

①Series name
②Single output
③Output wattage
④3φ 4-Wire
⑤Output voltage

＊Make sure necessary tests will be carried out on your end equipment with the power supply installed in accordance with any required EMC/EMI regulations.

MODEL		FETA7000ST-48	FETA7000ST-144
MAX OUTPUT WATTAGE[W]	＊1	7113	7488
DC OUTPUT		48V 148.2A	144V 52A

SPECIFICATIONS

	MODEL		FETA7000ST-48	FETA7000ST-144
INPUT	VOLTAGE[V]		AC300 - 480 3φ4-Wire (Output derating is required at AC300V - 320V. Refer to Derating)	
	CURRENT[A]	ACIN 400V ＊2	11.4typ	12.0typ
	FREQUENCY[Hz]		50 / 60 (47 - 63)	
	EFFICIENCY[%]	ACIN 400V	90.5% (Io=100%)	90.5% (Io=100%)
	POWER FACTOR	ACIN 400V	0.98typ (Io=100%)	
	INRUSH CURRENT[A]	ACIN 400V ＊3	40max / 80max (Primary inrush current /Secondary inrush current) (More than 10 sec. to re-start)	
	LEAKAGE CURRENT[mA]		5.0max (ACIN 480V 60Hz, Io=100%, According to IEC62368-1)	
OUTPUT	VOLTAGE[V]		48	144
	CURRENT[A]	ACIN 300V-320V	Output derating is required at ACIN 320V or less (refer to Derating)	
		ACIN 320V-480V	148.2	52
	LINE REGULATION[mV]		192max	360max
	LOAD REGULATION[mV]		960max	1800max
	RIPPLE[mVp-p]	0 to +40℃ ＊4	360max	720max
		-10 to 0℃ ＊4	480max	960max
	RIPPLE NOISE[mVp-p]	0 to +40℃ ＊4	480max	960max
		-10 to 0℃ ＊4	600max	1200max
	TEMPERATURE REGULATION[mV]	0 to +40℃	480max	2200max
		-10 to +40℃	600max	2800max
	DRIFT[mV]	＊5	192max	384max
	START-UP TIME[s]		1.7max (ACIN 400V, Io=100%)	
	HOLD-UP TIME[ms]	ACIN 400V	10typ (Io=100%)	
			20typ (Io=50%)	
	OUTPUT VOLTAGE ADJUSTMENT RANGE[V]	＊6	28.8 - 52.8 ＊7	86.4 - 158.4 ＊8
	OUTPUT VOLTAGE SETTING[V]		47 - 49	141 - 147
PROTECTION CIRCUIT AND OTHERS	OVERCURRENT PROTECTION		Works over 105% of rating (Recovers automatically, Hiccup overcurrent) (Output voltage shuts down when the output voltage continuously drops due to overcurrent protection.) ＊9	
	OVERVOLTAGE PROTECTION[V]	＊9	56 - 60	168 - 180
	DC_OK LAMP		LED (Green)	
	ALARM LAMP		LED (Amber)	
	REMOTE ON/OFF		Provided	
ISOLATION	INPUT–OUTPUT·AUX·RC·WRN·PG		AC3,000V 1minute, Cutoff current = 100mA, DC500V 50MΩ min (At room temperature)	
	INPUT–FG		AC2,000V 1minute, Cutoff current = 100mA, DC500V 50MΩ min (At room temperature)	
	OUTPUT·AUX·RC·WRN·PG–FG		AC500V 1minute, Cutoff current = 100mA, DC500V 50MΩ min (At room temperature)	
	OUTPUT–AUX·RC·WRN·PG		AC100V 1minute, Cutoff current = 100mA, DC100V 50MΩ min (At room temperature)	
ENVIRONMENT	OPERATING TEMP.,HUMID.AND ALTITUDE		-10 to +60℃ (Output derating is required), 20 - 90%RH (Non condensing), 3,000m (10,000 feet) max	
	STORAGE TEMP.,HUMID.AND ALTITUDE		-20 to +75℃, 20 - 90%RH (Non condensing), 9,000m (30,000 feet) max	
	VIBRATION		10 - 55Hz, 19.6m/s² (2G), 3minutes period, 60minutes each along X, Y and Z axis	
	IMPACT		196.1m/s² (20G), 11ms, once each along X, Y and Z axis	
SAFETY AND NOISE REGULATIONS	AGENCY APPROVALS		UL62368-1, C-UL (CSA62368-1), EN62368-1	
	CONDUCTED NOISE		Complies with FCC Part15-A, CISPR32-A, EN55032-A, VCCI-A with an external EMI/EMC filter. (refer to Instruction manual)	
	HARMONIC ATTENUATOR		Complies with IEC61000-3-2 Class A ＊10	
OTHERS	CASE SIZE/WEIGHT	＊11	388×43×475mm [15.28×1.69×18.70 inches] (W×H×D) / 11kg max	
	COOLING METHOD		Forced cooling (internal fan)	

＊1 AUX output power is not included.
＊2 The current flowing through the neutral line increases when AC input voltage is over AC456V 3φ 4-Wire. The flowing current will vary according to the input voltage and the load current. The maximum flowing current will be 18A.
＊3 The current of input surge to a built-in noise filter (0.2ms or less) is excluded.
＊4 Measured by 500MHz oscilloscope.
Ripple and ripple noise is measured on measuring board with capacitor of 22μF within 150mm from the output terminal.
＊5 Drift is the change in DC output for an eight hour period after a half-hour warm-up at 25℃, with the input voltage held constant at the rated input/output.
＊6 Can't be used above the rated output current and the rated output power.
＊7 When the output voltage is adjusted to higher than 49.92V and the load factor is over 70% of the rated current, if the load current changes quickly (< 200msec), the output voltage drops approximately 5V below the setting voltage.
＊8 When the output voltage is adjusted to higher than 149.82V and the load factor is over 70% of the rated current, if the load current changes quickly (<200msec), the output voltage drops approximately 15V below the setting voltage.
＊9 Output voltage recovers from protection by shutting down the input voltage and waiting more than 10 seconds then turning on AC input again, or turning off the output voltage by remote control.
＊10 Please contact us about another class.
＊11 Case size contains neither the terminal blocks, connector and screw.
＊ To meet the specifications, do not operate over-loaded condition.
＊ A sound may occur from power supply at peak loading.

Block diagram

●FETA7000ST-48

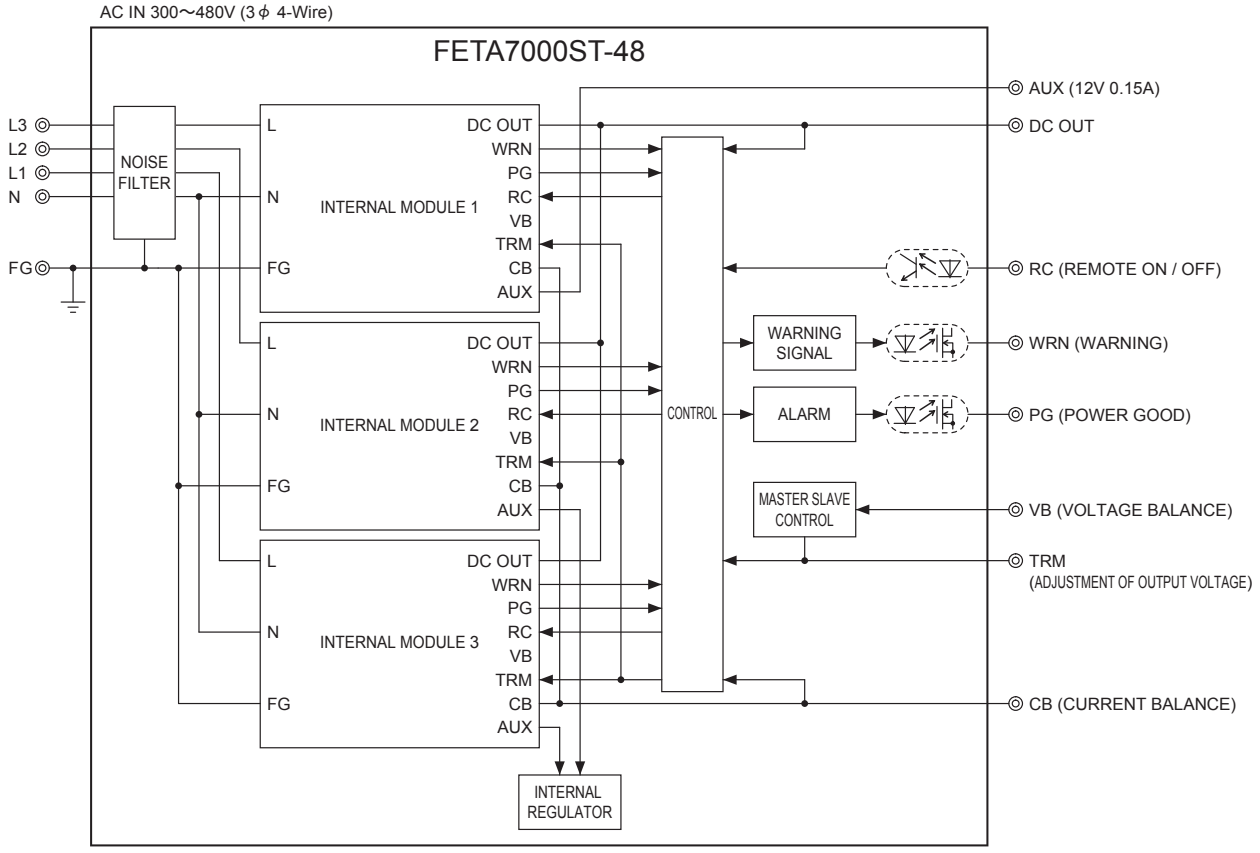

●FETA7000ST-144

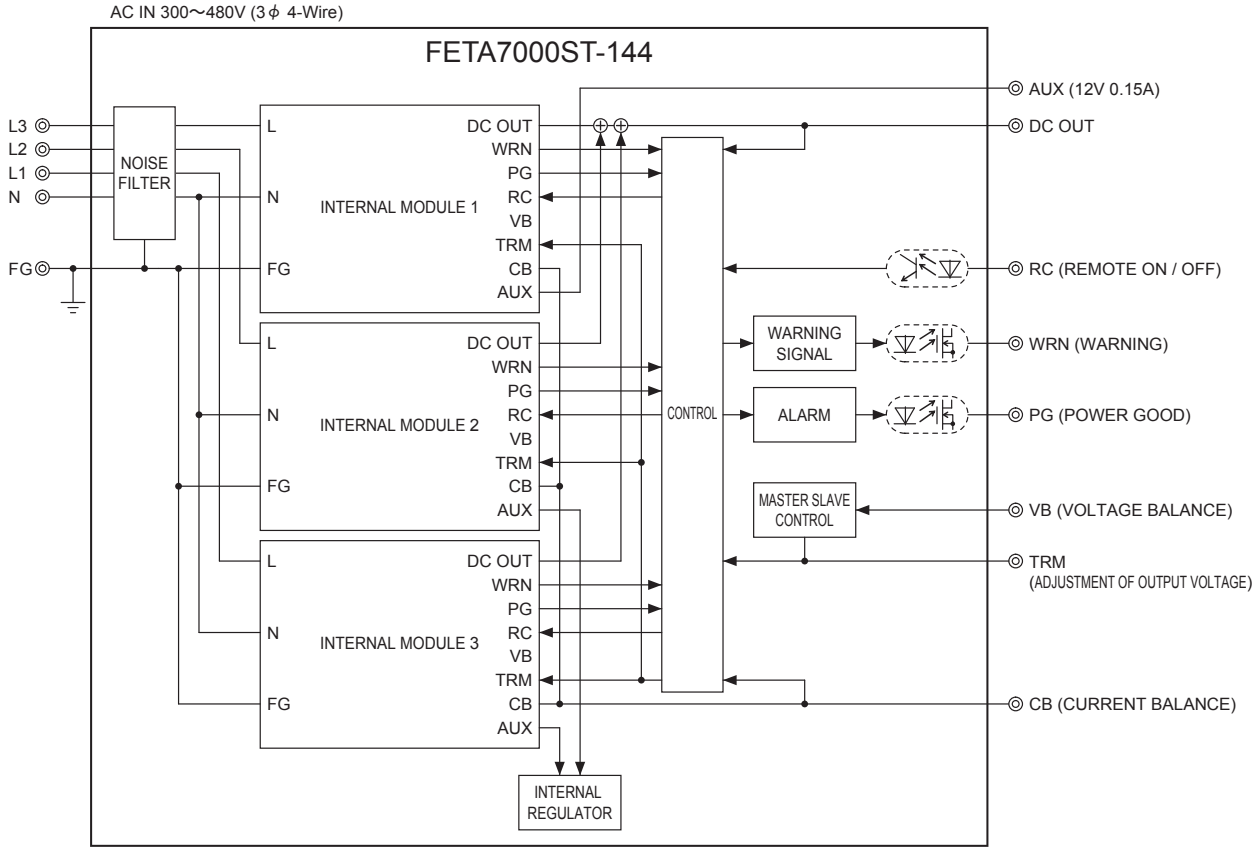

Block diagram of internal module

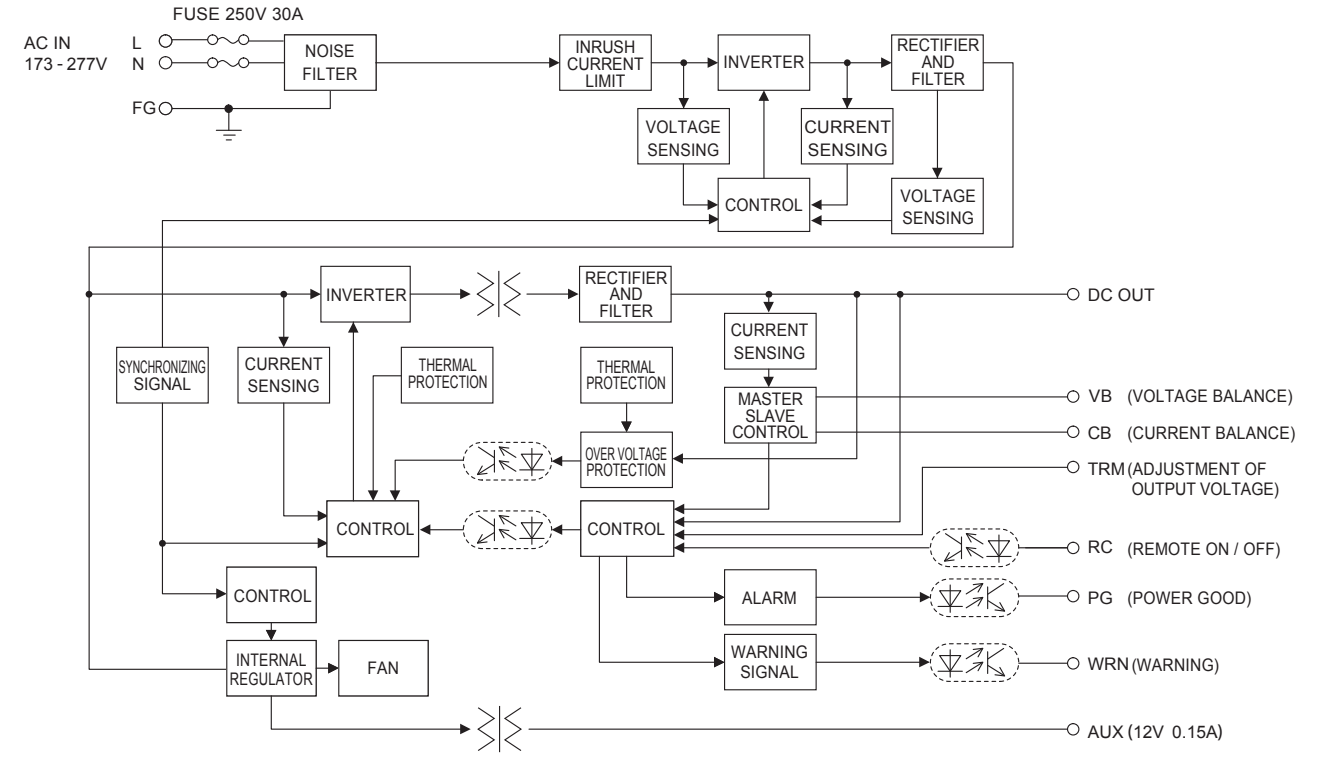

External view

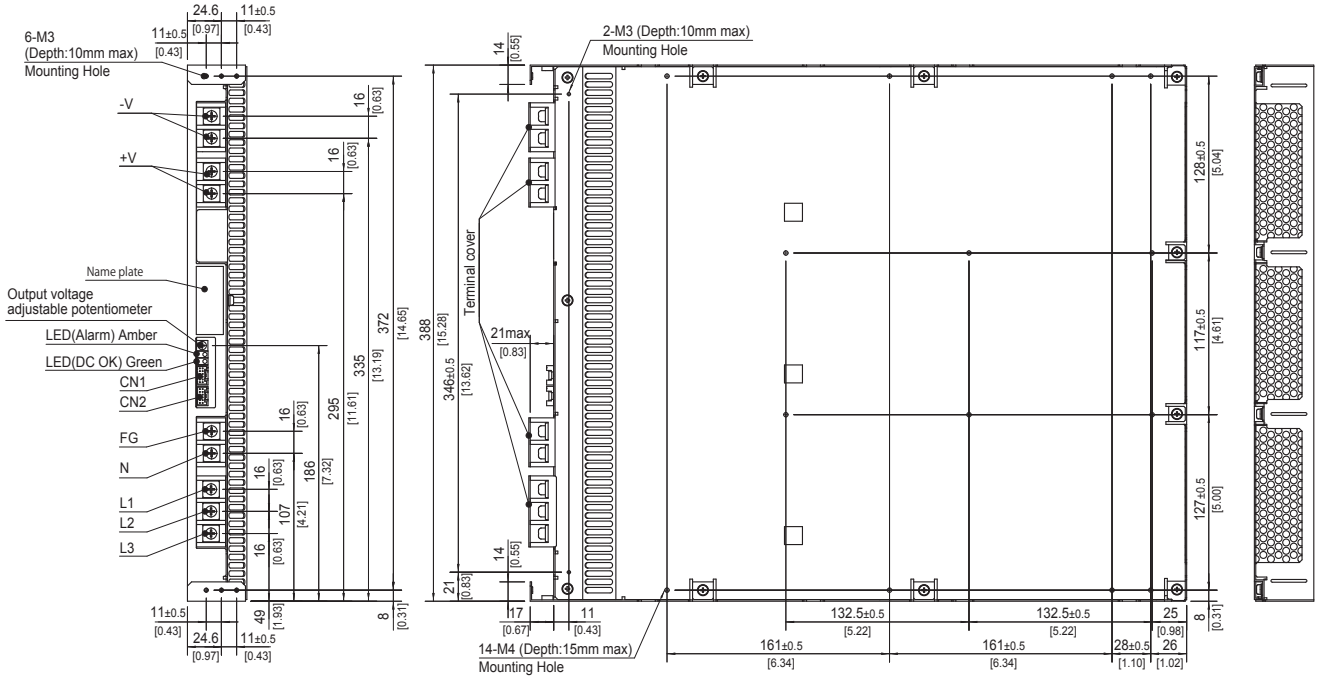

- ∗ Tolerance ±1 [±0.04]
- ∗ Weight : 11kg max
- ∗ PCB Material / thickness : FR-4 / 1.6mm [0.06]
- ∗ Chassis Material : Stainless steel
- ∗ Dimensions in mm, [ ]=inches
- ∗ Screw tightening torque : M3 Mounting Hole 0.6N・m max
  M4 Mounting Hole 1.2N・m max
  M5 Terminal block 3.0N・m max
- ∗ Please connect safety ground to FG terminal on the unit.

Terminal Blocks

● FETA2500BA, 3000BA

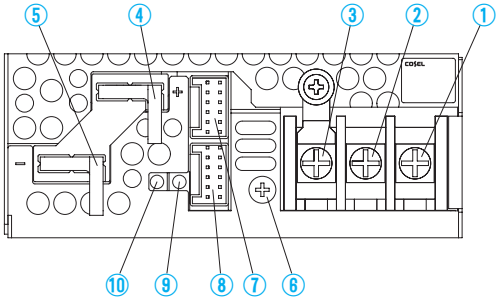

①AC (L) } Input Terminals AC170 - 264V 1 ϕ 47 - 63Hz
②AC (N) } (M4)
③Frame ground (M4 ⏚)
④+Output
⑤–Output
⑥Output voltage adjustable potentiometer
⑦CN1 } Connectors
⑧CN2 }
⑨LED for output voltage confirmation (DC_OK)
⑩LED for fault condition detection (ALARM)

● FETA7000T

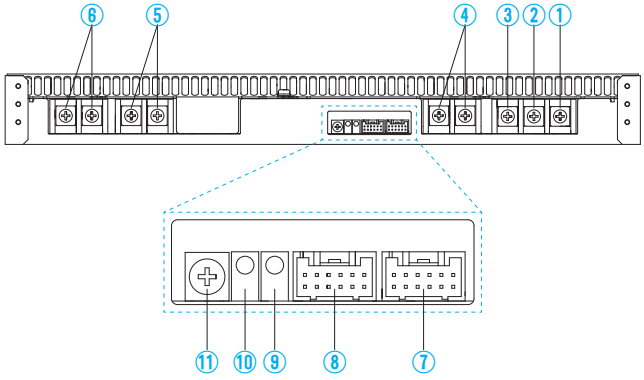

①AC (T) } Input Terminals AC170 - 264V 3 ϕ 47 - 63Hz
②AC (S) } (M5)
③AC (R) }
④Frame ground (M5 ⏚)
⑤+Output
⑥–Output
⑦CN2 } Connectors
⑧CN1 }
⑨LED for output voltage confirmation (DC_OK)
⑩LED for fault condition detection (ALARM)
⑪Output voltage adjustable potentionmeter

● FETA2500BA, 3000BA

Pin Configuration and Functions of CN1, CN2

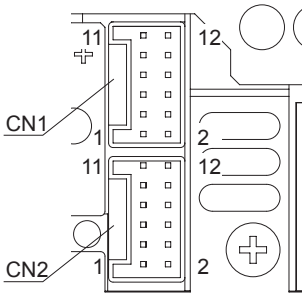

Pin No.	Pin Name	Function
1	AUXG	Auxiliary power output (GND)
2	AUX	Auxiliary power output
3	WRNG	Warning signal (GND)
4	WRN	Warning signal
5	PGG	Alarm signal (GND)
6	PG	Alarm signal
7	RCG	Remote ON/OFF (GND)
8	RC	Remote ON/OFF
9	COM	Signal ground
10	TRM	Adjustment of output voltage
11	VB	Voltage Balance
12	CB	Current Balance

Connector		Housing	Terminal	Mfr.
CN1	S12B-PUDSS-1	PUDP-12V-S	Reel : SPUD-001T-P0.5 or SPUD-002T-P0.5	J.S.T
CN2				

● FETA7000T

Pin Configuration and Functions of CN1, CN2

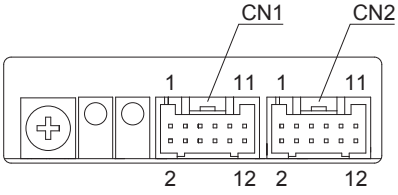

Pin No.	Pin Name	Function
1	AUXG	Auxiliary power output (GND)
2	AUX	Auxiliary power output
3	WRNG	Warning signal (GND)
4	WRN	Warning signal
5	PGG	Alarm signal (GND)
6	PG	Alarm signal
7	RCG	Remote ON/OFF (GND)
8	RC	Remote ON/OFF
9	COM	Signal ground
10	TRM	Adjustment of output voltage
11	VB	Voltage Balance
12	CB	Current Balance

Connector		Housing	Terminal	Mfr.
CN1	S12B-PUDSS-1	PUDP-12V-S	Reel : SPUD-001T-P0.5 or SPUD-002T-P0.5	J.S.T
CN2				

Terminal Blocks

● FETA7000ST

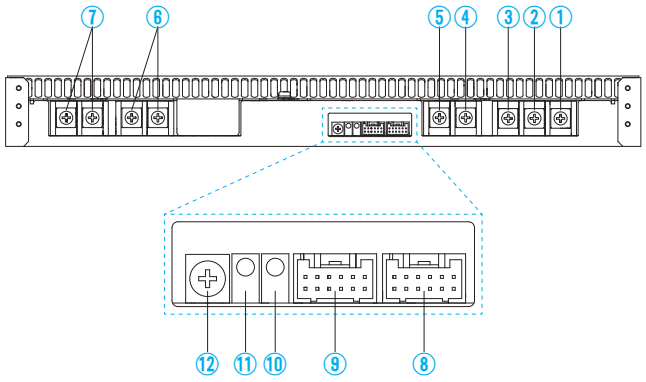

①AC (L3)
②AC (L2)
③AC (L1)
④AC (N)
} Input Terminals AC170 - 264V 3 ϕ - 4 wire 47 - 63Hz (M5)

⑤Frame ground (M5 ⏚)
⑥+Output
⑦−Output
⑧CN2
⑨CN1
} Connectors
⑩LED for output voltage confirmation (DC_OK)
⑪LED for fault condition detection (ALARM)
⑫Output voltage adjustable potentionmeter

● FETA7000ST

Pin Configuration and Functions of CN1, CN2

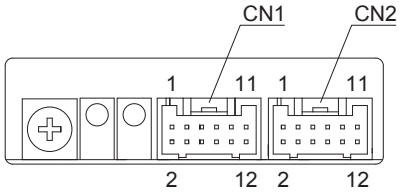

Pin No.	Pin Name	Function
1	AUXG	Auxiliary power output (GND)
2	AUX	Auxiliary power output
3	WRNG	Warning signal (GND)
4	WRN	Warning signal
5	PGG	Alarm signal (GND)
6	PG	Alarm signal
7	RCG	Remote ON/OFF (GND)
8	RC	Remote ON/OFF
9	COM	Signal ground
10	TRM	Adjustment of output voltage
11	VB	Voltage Balance
12	CB	Current Balance

Connector		Housing	Terminal	Mfr.
CN1	S12B-PUDSS-1	PUDP-12V-S	Reel : SPUD-001T-P0.5 or SPUD-002T-P0.5	J.S.T
CN2				

Assembling and Installation Method

Installation Method

■Screw mounting requires considering the product weight for safety fixtures.

■To keep enough insulation distance between screws and internal components, length of the mounting screw should not exceed recommendation as shown in right figure.

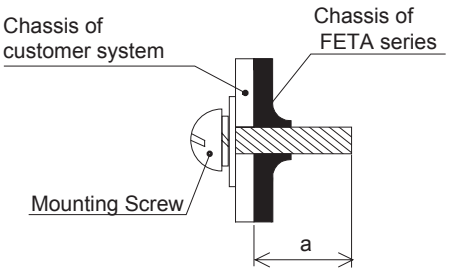

Model	Mounting hole	a (Max penetration length)
FETA2500BA, 3000BA	Bottom	6mm max
	Side	4.5mm max
FETA7000T, 7000ST	Side	15mm max

■The power supplies have a built-in forced cooling fan. Do notblock ventilation at the suction side and its opposite side.

* Reverse airflow option (-F2) is available for FETA2500BA. Refer to Instruction manual.

■If you use a power supply in a dusty environment, it can cause a failure. Please consider taking such countermeasures as installing an air filter near the suction area of the system to prevent afailure.

● FETA2500BA, 3000BA

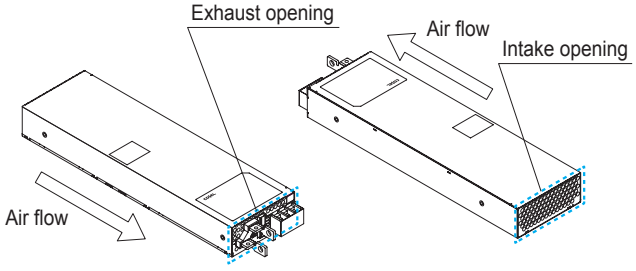

(a) Front side (b) Rear side

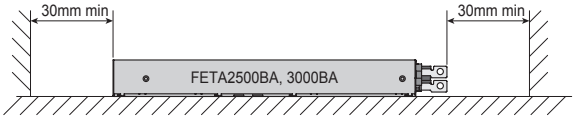

● FETA7000T, 7000ST

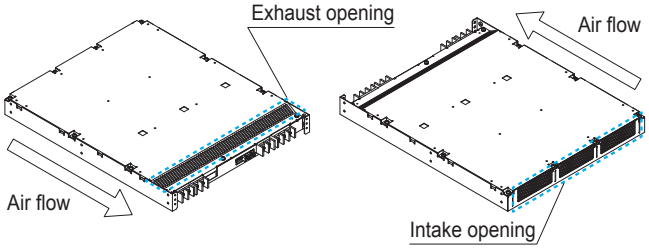

(a) Front side (b) Rear side

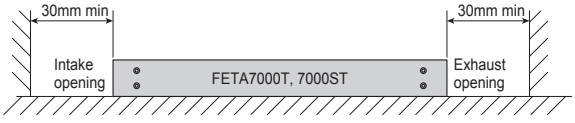

■When mounting the power supply with screws, it is recommended that this be done as shown in below figure.
If other methods are used, be sure the weight of the power supply is taken into account.

● FETA2500BA, 3000BA

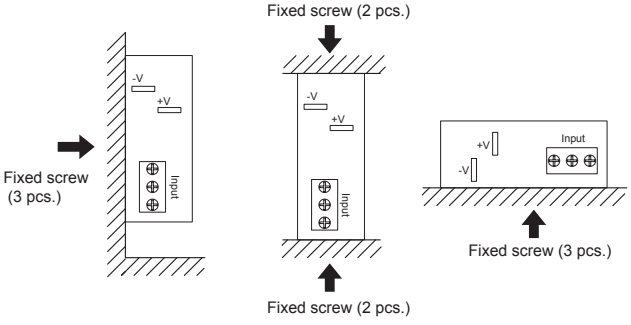

(A) (B) (C)

● FETA7000T, 7000ST

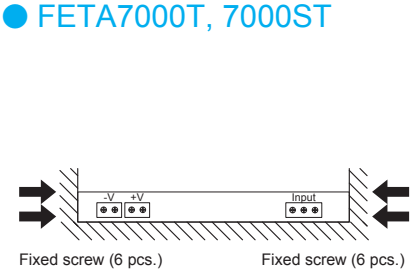

(a)

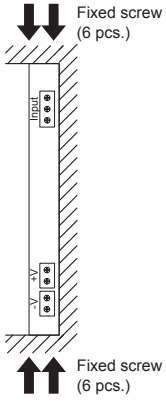

(b)

Derating

● Input Voltage Derating Curve

FETA2500BA, 3000BA, 7000T

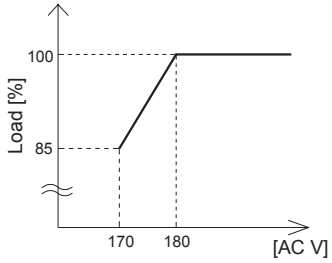

FETA7000ST

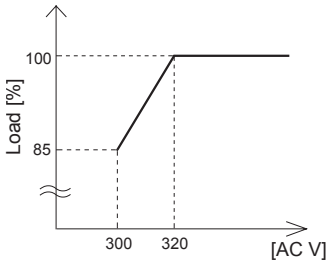

● Ambient Temperature Derating Curve

FETA2500BA, FETA3000BA

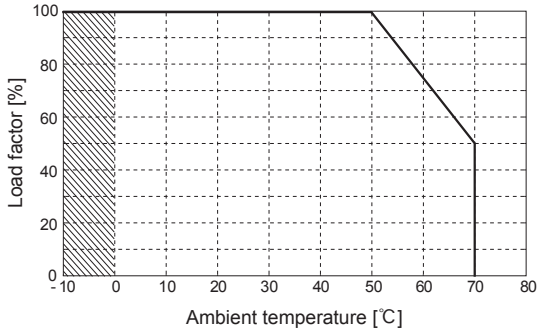

FETA7000T, FETA7000ST

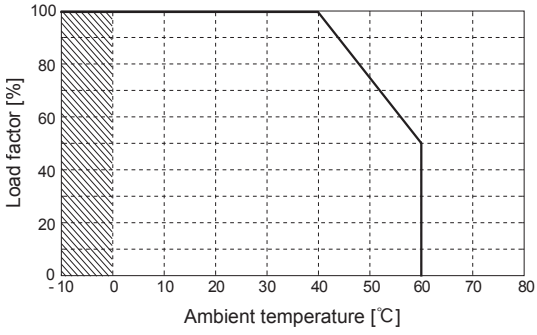

■Specifications for ripple and ripple noise changes in the shadedarea.

Instruction Manuals

◆ Please see catalog and instructionmanual before you use.

Instruction Manuals	https://en.cosel.co.jp/product/powersupply/FETA/
Before using our product	https://en.cosel.co.jp/technical/caution/index.html

FETA NOTICE

Basic Characteristics Data

Model	Circuit method	Switching frequency [kHz]	Input current [A]	Rated input fuse	Inrush current protection circuit	PCB/Pattern			Series/Parallel operation availability	
						Material	Single sided	Double sided	Series operation	Parallel operation
FETA2500BA	Active filter	47	13.8	250V 30A	Relay	FR-4		Yes	Yes	Yes
	Phase-shift Full-bridge converter	94								
FETA3000BA	Active filter	47	16.6	250V 30A	Relay	FR-4		Yes	Yes	Yes
	Phase-shift Full-bridge converter	94								
FETA7000T	Active filter	47	23.9	250V 30A	Relay	FR-4		Yes	Yes	Yes
	Phase-shift Full-bridge converter	94								

* The value of input current is at ACIN 200V and rated laod.

Model	Circuit method	Switching frequency [kHz]	Input current [A]	Rated input fuse	Inrush current protection circuit	PCB/Pattern			Series/Parallel operation availability	
						Material	Single sided	Double sided	Series operation	Parallel operation
FETA7000ST	Active filter	47	12.0	250V 30A	Relay	FR-4		Yes	Yes	Yes
	Phase-shift Full-bridge converter	94								

* The value of input current is at ACIN 400V and rated load.

Mouser Electronics

Authorized Distributor

Click to View Pricing, Inventory, Delivery & Lifecycle Information:

Cosel:

FETA2500BA-36 FETA2500BA-48 FETA7000T-144 FETA7000T-48 FETA3000BA-48

ООО «ЛайфЭлектроникс» “LifeElectronics” LLC

ИНН 7805602321 КПП 780501001 Р/С 40702810122510004610 ФАКБ "АБСОЛЮТ БАНК" (ЗАО) в г.Санкт-Петербурге К/С 30101810900000000703 БИК 044030703

Компания «Life Electronics» занимается поставками электронных компонентов импортного и отечественного производства от производителей и со складов крупных дистрибьюторов Европы, Америки и Азии.

С конца 2013 года компания активно расширяет линейку поставок компонентов по направлению коаксиальный кабель, кварцевые генераторы и конденсаторы (керамические, пленочные, электролитические), за счёт заключения дистрибьюторских договоров

Мы предлагаем:

- *Конкурентоспособные цены и скидки постоянным клиентам.*
- *Специальные условия для постоянных клиентов.*
- *Подбор аналогов.*
- *Поставку компонентов в любых объемах, удовлетворяющих вашим потребностям.*

- *Приемлемые сроки поставки, возможна ускоренная поставка.*
- *Доставку товара в любую точку России и стран СНГ.*
- *Комплексную поставку.*
- *Работу по проектам и поставку образцов.*
- *Формирование склада под заказчика.*

- *Сертификаты соответствия на поставляемую продукцию (по желанию клиента).*
- *Тестирование поставляемой продукции.*
- *Поставку компонентов, требующих военную и космическую приемку.*
- *Входной контроль качества.*
- *Наличие сертификата ISO.*

В составе нашей компании организован Конструкторский отдел, призванный помогать разработчикам, и инженерам.

Конструкторский отдел помогает осуществить:

- *Регистрацию проекта у производителя компонентов.*
- *Техническую поддержку проекта.*
- *Защиту от снятия компонента с производства.*
- *Оценку стоимости проекта по компонентам.*
- *Изготовление тестовой платы монтаж и пусконаладочные работы.*

Тел: +7 (812) 336 43 04 (многоканальный)
Email: org@lifeelectronics.ru

www.lifeelectronics.ru