Bidirectional, Zero Drift, Current Sense Amplifier

Data Sheet

AD8418A

FEATURES

Typical 0.1 µV/°C offset drift
Maximum ±200 µV voltage offset over full temperature range
2.7 V to 5.5 V power supply operating range
Electromagnetic interference (EMI) filters included
High common-mode input voltage range
- **−2 V to +70 V, continuous operation**
- **−3 V to +80 V, continuous survival**

Minimum DC common-mode rejection ratio (CMRR): 90 dB
Initial gain = 20 V/V
Wide operating temperature range
- **AD8418AWB: −40°C to +125°C**
- **AD8418AWH: −40°C to +150°C**

Bidirectional operation
Available in 8-lead SOIC and 8-lead MSOP
Qualified for automotive applications

APPLICATIONS

High-side current sensing in
- **Motor controls**
- **Solenoid controls**
- **Power management**

Low-side current sensing
Diagnostic protection

GENERAL DESCRIPTION

The AD8418A is a high voltage, high resolution current shunt amplifier. It features an initial gain of 20 V/V, with a maximum ±0.15% gain error over the entire temperature range. The buffered output voltage directly interfaces with any typical converter. The AD8418A offers excellent input common-mode rejection from −2 V to +70 V. The AD8418A performs bidirectional current measurements across a shunt resistor in a variety of automotive and industrial applications, including motor control, power management, and solenoid control.

The AD8418A offers breakthrough performance throughout the −40°C to +150°C temperature range. It features a zero drift core, which leads to a typical offset drift of 0.1 µV/°C throughout the operating temperature range and the common-mode voltage range. The AD8418A is qualified for automotive applications. The device includes EMI filters and patented circuitry to enable output accuracy with pulse-width modulation (PWM) type input common-mode voltages. The typical input offset voltage is ±100 µV. The AD8418A is offered in 8-lead MSOP and SOIC packages.

Table 1. Related Devices

Part No.	Description
AD8205	Current sense amplifier, gain = 50
AD8206	Current sense amplifier, gain = 20
AD8207	High accuracy current sense amplifier, gain = 20
AD8210	High speed current sense amplifier, gain = 20
AD8417	High accuracy current sense amplifier, gain = 60

FUNCTIONAL BLOCK DIAGRAM

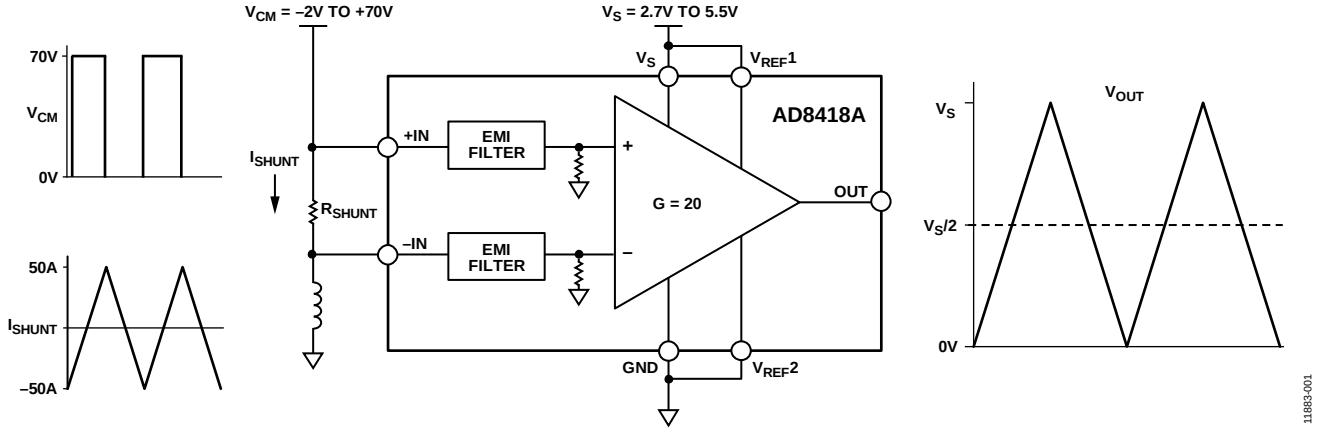

Figure 1.

Rev. D
Document Feedback
Information furnished by Analog Devices is believed to be accurate and reliable. However, no responsibility is assumed by Analog Devices for its use, nor for any infringements of patents or other rights of third parties that may result from its use. Specifications subject to change without notice. No license is granted by implication or otherwise under any patent or patent rights of Analog Devices. Trademarks and registered trademarks are the property of their respective owners.

One Technology Way, P.O. Box 9106, Norwood, MA 02062-9106, U.S.A.
Tel: 781.329.4700 ©2013–2018 Analog Devices, Inc. All rights reserved.
Technical Support
www.analog.com

TABLE OF CONTENTS

Features ... 1
Applications ... 1
General Description ... 1
Functional Block Diagram ... 1
Revision History ... 2
Specifications ... 3
Absolute Maximum Ratings ... 4
ESD Caution ... 4
Pin Configuration and Function Descriptions ... 5
Typical Performance Characteristics ... 6
Theory of Operation ... 11
Output Offset Adjustment ... 12
Unidirectional Operation ... 12
Bidirectional Operation ... 12
External Referenced Output ... 13
Splitting the Supply ... 13
Splitting an External Reference ... 13
Applications Information ... 14
Motor Control ... 14
Solenoid Control ... 15
Outline Dimensions ... 16
Ordering Guide ... 17
Automotive Products ... 17

REVISION HISTORY

12/2018—Rev. C to Rev. D

Changes to Features Section ... 1
Changes to Table 3 ... 4

5/2018—Rev. B to Rev. C

Changes to Input Bias Current Parameter, Table 2 ... 3
Changes to Figure 20 ... 8

4/2017—Rev. A to Rev. B

Changes to Features Section and General Description Section ... 1
Changes to Table 2 ... 3
Changes to Table 3 ... 4
Change to Figure 18 ... 8
Added Figure 19 and Figure 20; Renumbered Sequentially ... 8

12/2014—Rev. 0 to Rev. A

Added AD8418AWH ... Universal
Changes to Features Section and General Description Section ... 1
Changes to Specifications Section and Table 2 ... 3
Changes to Table 3 ... 4
Changes to Ordering Guide ... 16

11/2013—Revision 0: Initial Version

SPECIFICATIONS

T_A = −40°C to +125°C (operating temperature range) for the AD8418AWB, T_A = −40°C to +150°C for the AD8418AWH, V_S = 5 V, unless otherwise noted.

Table 2.

Parameter	Test Conditions/Comments	Min	Typ	Max	Unit
GAIN					
Initial			20		V/V
Error Over Temperature	Specified temperature range			±0.15	%
Gain vs. Temperature		−5		+5	ppm/°C
VOLTAGE OFFSET					
Offset Voltage, Referred to the Input, RTI	25°C		±100		μV
Over Temperature, RTI	Specified temperature range			±200	μV
Offset Drift		−0.4	+0.1	+0.4	μV/°C
INPUT					
Input Bias Current			130		μA
	+IN = −IN = 12 V, $V_{REF}1$ = $V_{REF}2$ = 2.5 V, AD8418AWB			260	μA
Input Voltage Range	Common mode, continuous	−2		+70	V
Common-Mode Rejection Ratio (CMRR)	Specified temperature range, f = dc	90	100		dB
	f = dc to 10 kHz		86		dB
OUTPUT					
Output Voltage Range	R_L = 25 kΩ	0.032		V_S − 0.032	V
Output Resistance			2		Ω
Maximum Capacitive Load	No continuous oscillation	0		500	pF
DYNAMIC RESPONSE					
Small Signal −3 dB Bandwidth			250		kHz
Slew Rate			1		V/μs
NOISE					
0.1 Hz to 10 Hz (RTI)			2.3		μV p-p
Spectral Density, 1 kHz, RTI			110		nV/√Hz
OFFSET ADJUSTMENT					
Ratiometric Accuracy[1]	Divider to supplies	0.4985		0.5015	V/V
Accuracy, Referred to the Output (RTO)	Voltage applied to $V_{REF}1$ and $V_{REF}2$ in parallel			±1	mV/V
Output Offset Adjustment Range	V_S = 5 V	0.032		V_S − 0.032	V
POWER SUPPLY					
Operating Range		2.7		5.5	V
Quiescent Current Over Temperature	V_{OUT} = 0.1 V dc				
	AD8418AWB			4.1	mA
	AD8418AWH			4.2	mA
Power Supply Rejection Ratio		80			dB
TEMPERATURE RANGE					
For Specified Performance	Operating temperature range				
	AD8418AWB	−40		+125	°C
	AD8418AWH	−40		+150	°C

[1] The offset adjustment is ratiometric to the power supply when $V_{REF}1$ and $V_{REF}2$ are used as a divider between the supplies.

ABSOLUTE MAXIMUM RATINGS

Table 3.

Parameter	Rating
Supply Voltage	6 V
Input Voltage Range	
Common-Mode	−3 V to +80 V
Differential	5.5 V (magnitude)
Reverse Supply Voltage	0.3 V
ESD Human Body Model (HBM)	±2000 V
Operating Temperature Range	
AD8418AWB	−40°C to +125°C
AD8418AWH	−40°C to +150°C
Storage Temperature Range	−65°C to +150°C
Output Short-Circuit Duration	Indefinite
SOIC Package	
θ_{JA} Thermal Resistance	127.4°C/W
MSOP Package	
θ_{JA} Thermal Resistance	134.5°C/W

Stresses at or above those listed under Absolute Maximum Ratings may cause permanent damage to the product. This is a stress rating only; functional operation of the product at these or any other conditions above those indicated in the operational section of this specification is not implied. Operation beyond the maximum operating conditions for extended periods may affect product reliability.

ESD CAUTION

ESD (electrostatic discharge) sensitive device. Charged devices and circuit boards can discharge without detection. Although this product features patented or proprietary protection circuitry, damage may occur on devices subjected to high energy ESD. Therefore, proper ESD precautions should be taken to avoid performance degradation or loss of functionality.

PIN CONFIGURATION AND FUNCTION DESCRIPTIONS

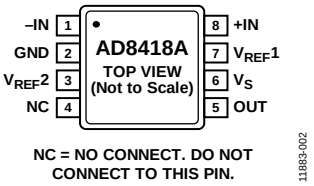

Figure 2. Pin Configuration

Table 4. Pin Function Descriptions

Pin No.	Mnemonic	Description
1	–IN	Negative Input.
2	GND	Ground.
3	$V_{REF}2$	Reference Input 2.
4	NC	No Connect. Do not connect to this pin.
5	OUT	Output.
6	V_S	Supply.
7	$V_{REF}1$	Reference Input 1.
8	+IN	Positive Input.

TYPICAL PERFORMANCE CHARACTERISTICS

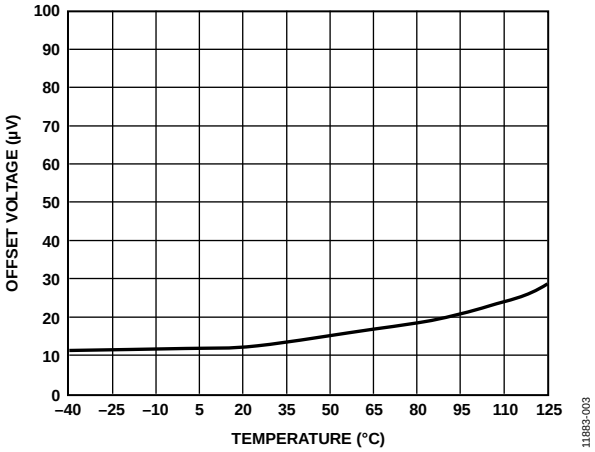

Figure 3. Typical Offset Drift vs. Temperature

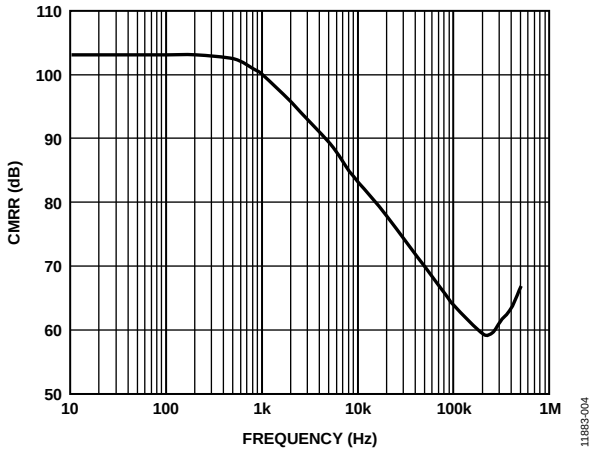

Figure 4. Typical CMRR vs. Frequency

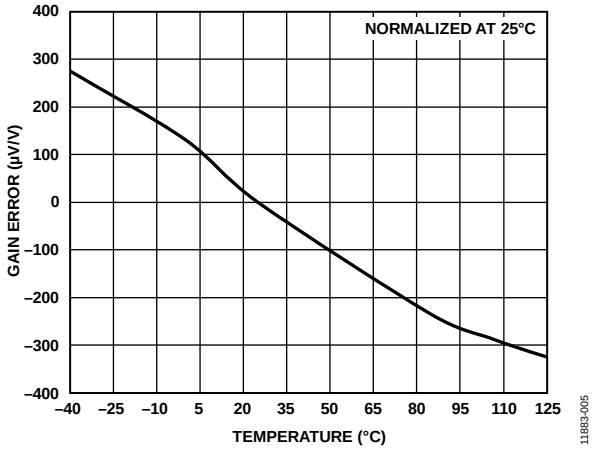

Figure 5. Typical Gain Error vs. Temperature

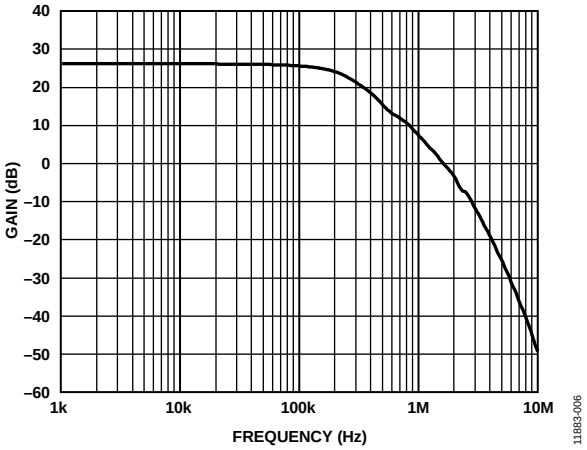

Figure 6. Typical Small Signal Bandwidth (V_{OUT} = 200 mV p-p)

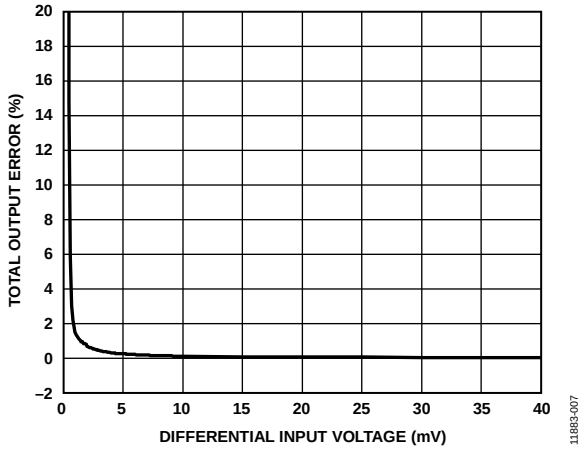

Figure 7. Total Output Error vs. Differential Input Voltage

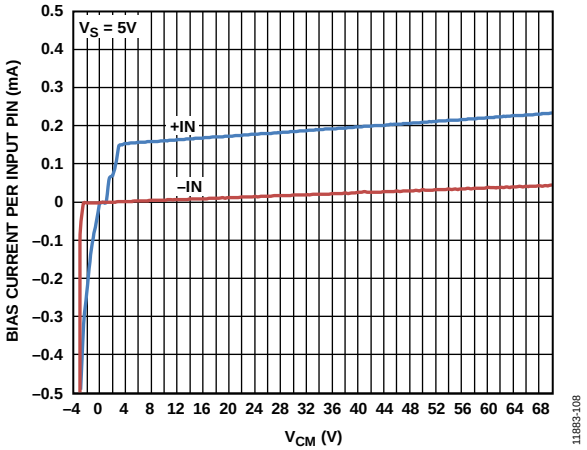

Figure 8. Bias Current per Input Pin vs. Common-Mode Voltage (V_{CM})

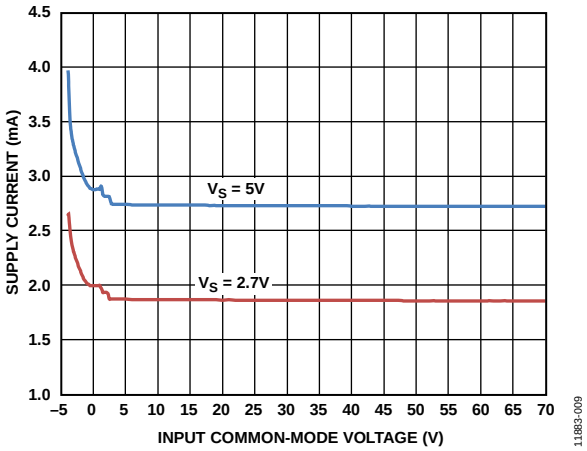

Figure 9. Supply Current vs. Input Common-Mode Voltage

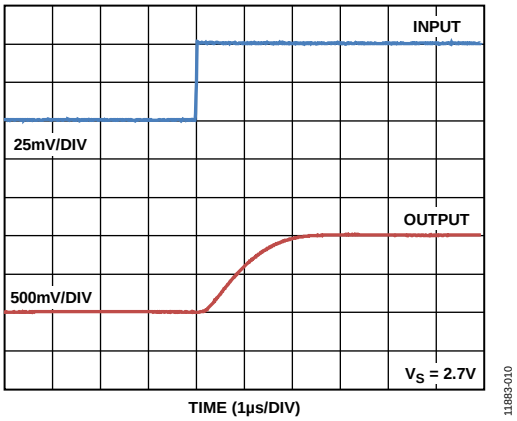

Figure 10. Rise Time (V_S = 2.7 V)

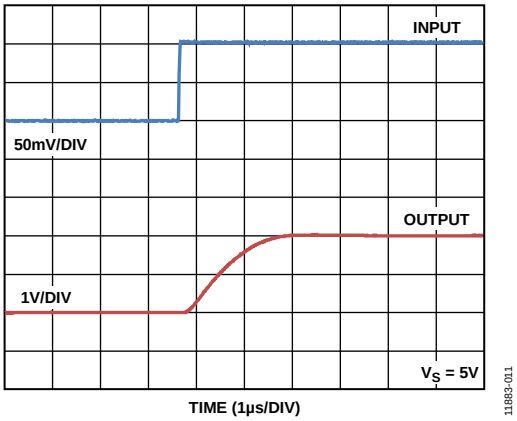

Figure 11. Rise Time (V_S = 5 V)

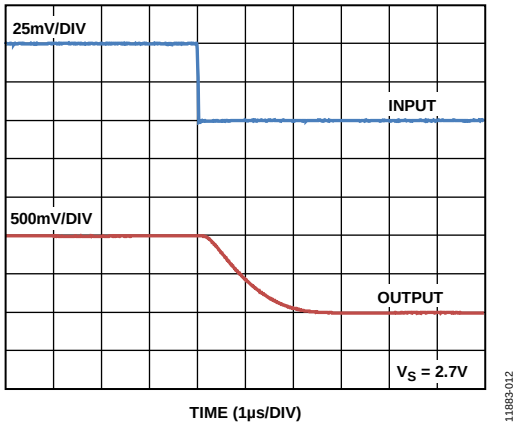

Figure 12. Fall Time (V_S = 2.7 V)

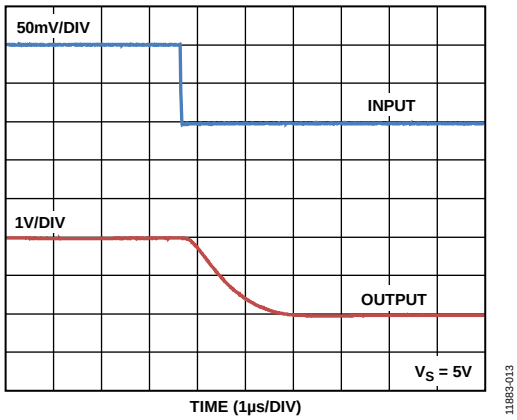

Figure 13. Fall Time (V_S = 5 V)

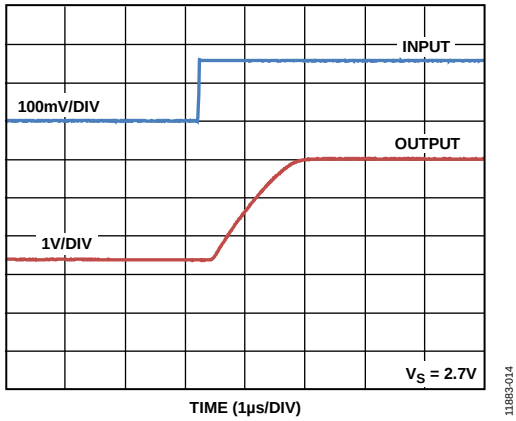

Figure 14. Differential Overload Recovery, Rising (V_S = 2.7 V)

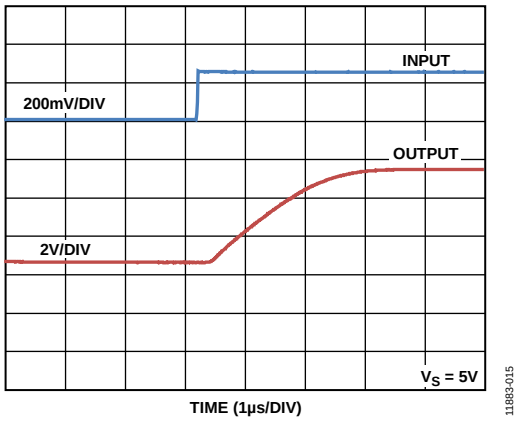

Figure 15. Differential Overload Recovery, Rising (V_S = 5 V)

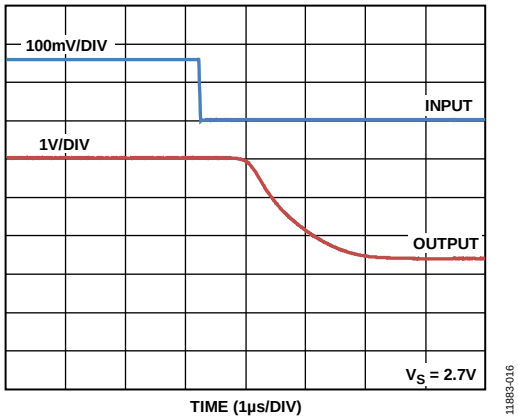

Figure 16. Differential Overload Recovery, Falling (V_S = 2.7 V)

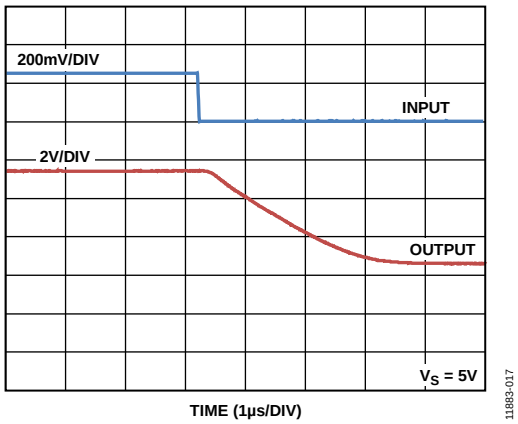

Figure 17. Differential Overload Recovery, Falling (V_S = 5 V)

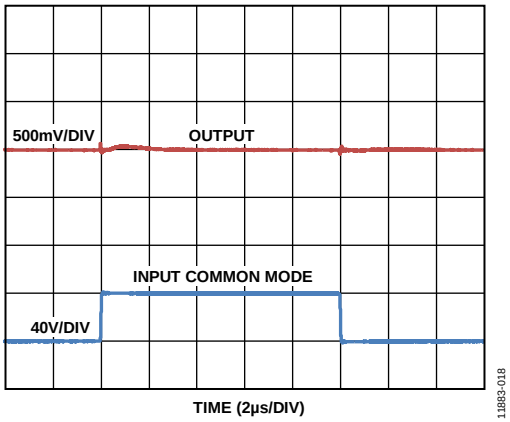

Figure 18. Input Common-Mode Step Response Large Scale (V_S = 5 V, Inputs Shorted)

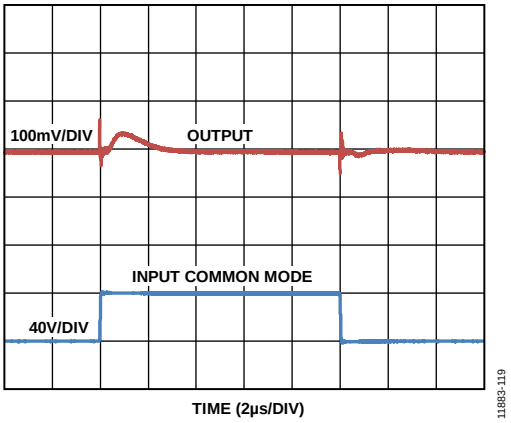

Figure 19. Input Common-Mode Step Response Small Scale (V_S = 5 V, Inputs Shorted)

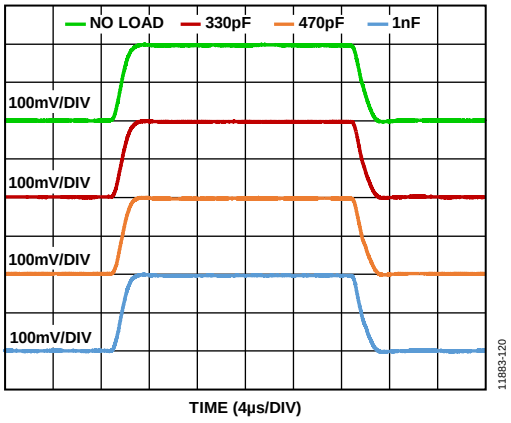

Figure 20. Small Signal Response for Various Capacitive Loads

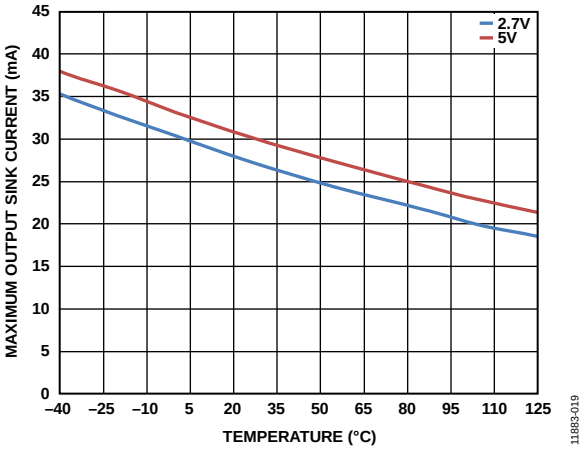

Figure 21. Maximum Output Sink Current vs. Temperature

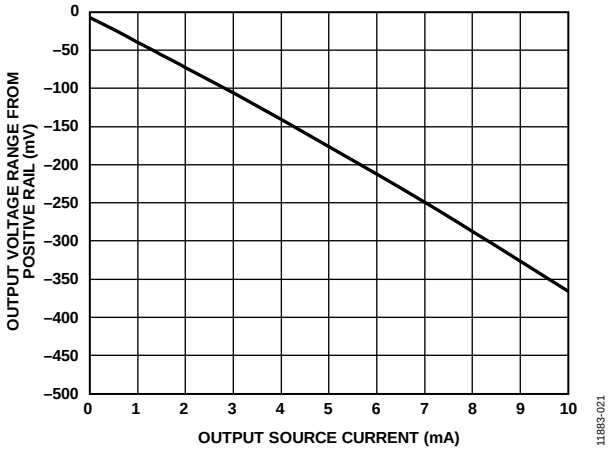

Figure 23. Output Voltage Range from Positive Rail vs. Output Source Current

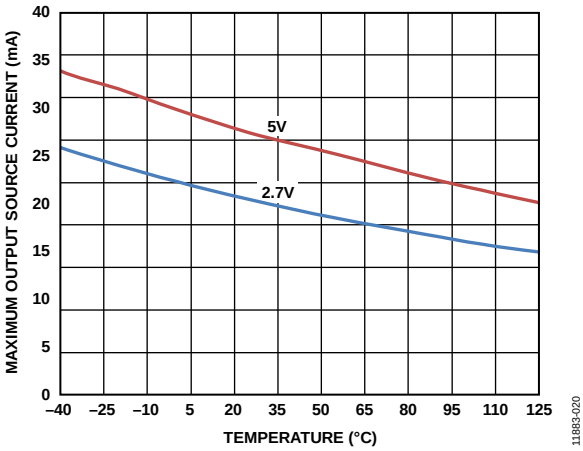

Figure 22. Maximum Output Source Current vs. Temperature

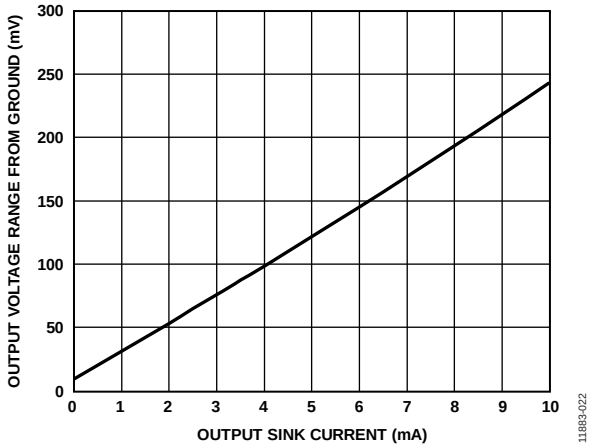

Figure 24. Output Voltage Range from Ground vs. Output Sink Current

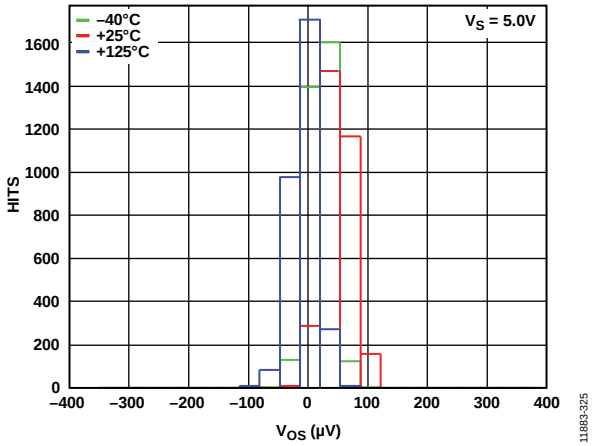

Figure 25. Offset Voltage Distribution

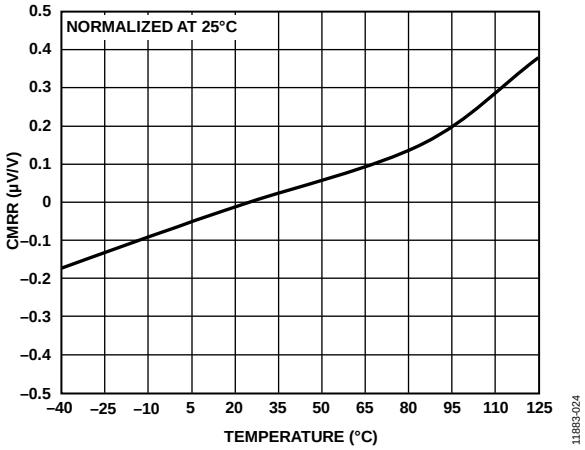

Figure 26. CMRR vs. Temperature

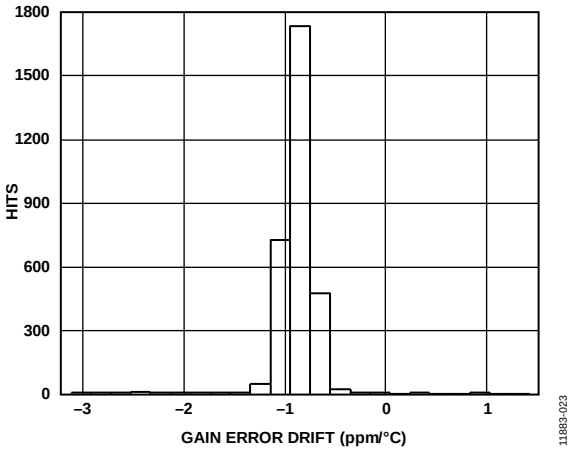

Figure 27. Gain Error Drift Distribution

THEORY OF OPERATION

The AD8418A is a single-supply, zero drift, difference amplifier that uses a unique architecture to accurately amplify small differential current shunt voltages in the presence of rapidly changing common-mode voltages.

In typical applications, the AD8418A measures current by amplifying the voltage across a shunt resistor connected to its inputs by a gain of 20 V/V (see Figure 28).

The AD8418A design provides excellent common-mode rejection, even with PWM common-mode inputs that can change at very fast rates, for example, 1 V/ns. The AD8418A contains proprietary technology to eliminate the negative effects of such fast changing external common-mode variations.

The AD8418A features an input offset drift of less than 400 nV/°C. This performance is achieved through a novel zero drift architecture that does not compromise bandwidth, which is typically rated at 250 kHz.

The reference inputs, $V_{REF}1$ and $V_{REF}2$, are tied through 100 kΩ resistors to the positive input of the main amplifier, which allows the output offset to be adjusted anywhere in the output operating range. The gain is 1 V/V from the reference pins to the output when the reference pins are used in parallel. When the pins are used to divide the supply, the gain is 0.5 V/V.

The AD8418A offers breakthrough performance without compromising any of the robust application needs typical of solenoid or motor control. The ability to reject PWM input common-mode voltages and the zero drift architecture providing low offset and offset drift allows the AD8418A to deliver total accuracy for these demanding applications.

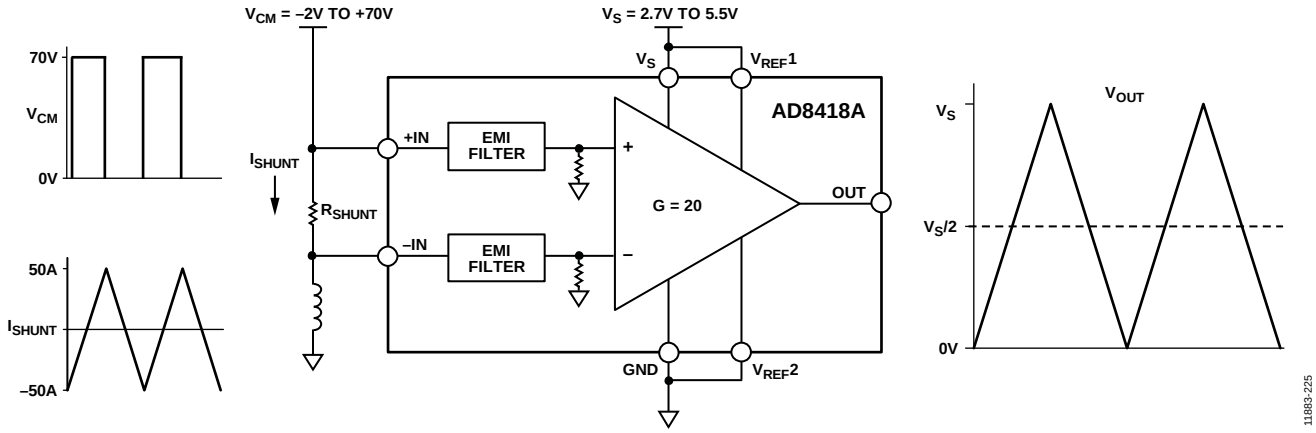

Figure 28. Typical Application

OUTPUT OFFSET ADJUSTMENT

The output of the AD8418A can be adjusted for unidirectional or bidirectional operation.

UNIDIRECTIONAL OPERATION

Unidirectional operation allows the AD8418A to measure currents through a resistive shunt in one direction. The basic modes for unidirectional operation are ground referenced output mode and V_S referenced output mode.

For unidirectional operation, the output can be set at the negative rail (near ground) or at the positive rail (near V_S) when the differential input is 0 V. The output moves to the opposite rail when a correct polarity differential input voltage is applied. The required polarity of the differential input depends on the output voltage setting. If the output is set at the positive rail, the input polarity needs to be negative to decrease the output. If the output is set at ground, the polarity must be positive to increase the output.

Ground Referenced Output Mode

When using the AD8418A in ground referenced output mode, both referenced inputs are tied to ground, which causes the output to sit at the negative rail when there are zero differential volts at the input (see Figure 29).

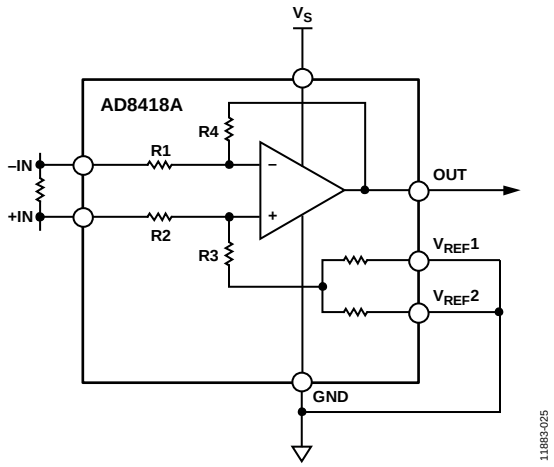

Figure 29. Ground Referenced Output

V_S Referenced Output Mode

V_S referenced output mode is set when both reference pins are tied to the positive supply. It is typically used when the diagnostic scheme requires detection of the amplifier and the wiring before power is applied to the load (see Figure 30).

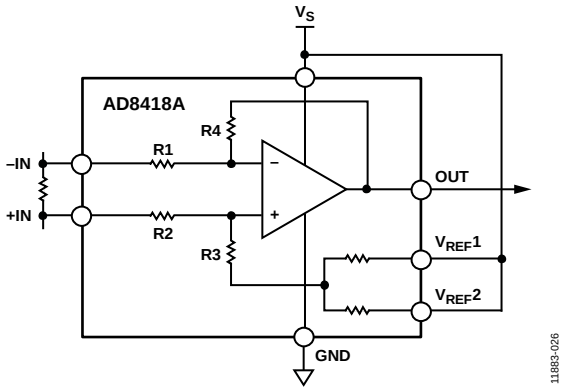

Figure 30. V_S Referenced Output

BIDIRECTIONAL OPERATION

Bidirectional operation allows the AD8418A to measure currents through a resistive shunt in two directions.

In this case, the output is set anywhere within the output range. Typically, it is set at half-scale for equal range in both directions. In some cases, however, it is set at a voltage other than half-scale when the bidirectional current is nonsymmetrical.

Adjusting the output is accomplished by applying voltage(s) to the referenced inputs. $V_{REF}1$ and $V_{REF}2$ are tied to internal resistors that connect to an internal offset node. There is no operational difference between the pins.

EXTERNAL REFERENCED OUTPUT

Tying $V_{REF}1$ and $V_{REF}2$ together and to a reference produces an output equal to the reference voltage when there is no differential input (see Figure 31). The output decreases with respect to the reference voltage when the input is negative, relative to the –IN pin, and increases when the input is positive, relative to the –IN pin.

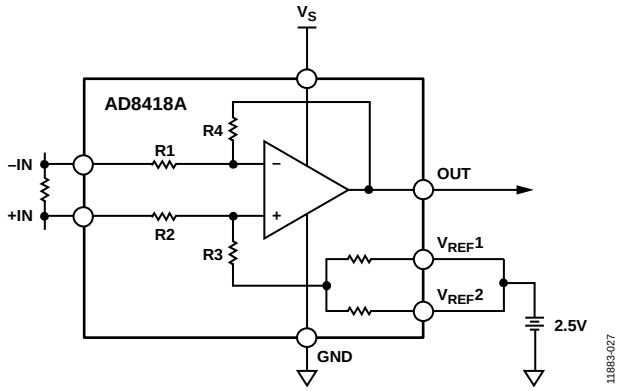

Figure 31. External Referenced Output

SPLITTING THE SUPPLY

By tying one reference pin to V_S and the other to the ground pin, the output is set at half of the supply when there is no differential input (see Figure 32). The benefit of this configuration is that an external reference is not required to offset the output for bidirectional current measurement. Tying one reference pin to V_S and the other to the ground pin creates a midscale offset that is ratiometric to the supply, which means that if the supply increases or decreases, the output remains at half the supply. For example, if the supply is 5.0 V, the output is at half scale or 2.5 V. If the supply increases by 10% (to 5.5 V), the output increases to 2.75 V.

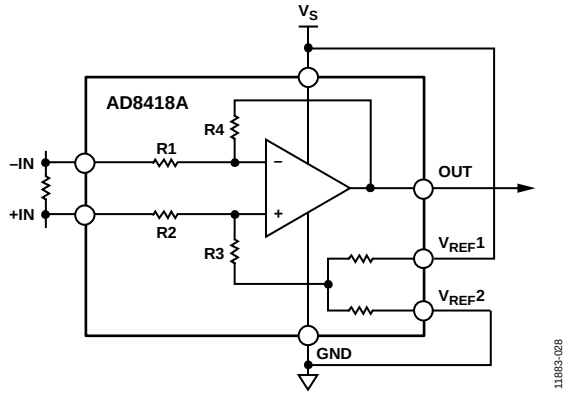

Figure 32. Split Supply

SPLITTING AN EXTERNAL REFERENCE

Use the internal reference resistors to divide an external reference by 2 with an accuracy of approximately 0.5%. Split an external reference by connecting one $V_{REF}x$ pin to ground and the other $V_{REF}x$ pin to the reference (see Figure 33).

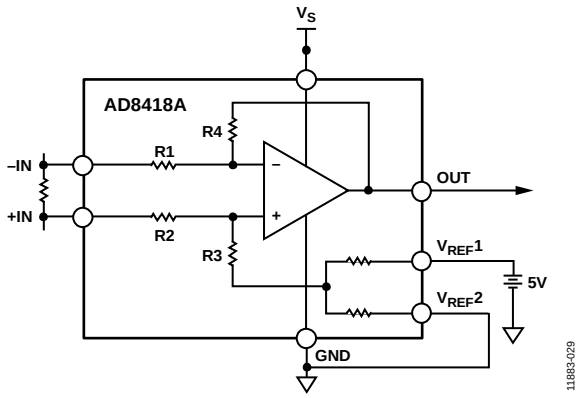

Figure 33. Split External Reference

APPLICATIONS INFORMATION

MOTOR CONTROL

3-Phase Motor Control

The AD8418A is ideally suited for monitoring current in 3-phase motor applications.

The 250 kHz typical bandwidth of the AD8418A provides instantaneous current monitoring. Additionally, the typical low offset drift of 0.1 µV/°C means that the measurement error between the two motor phases is at a minimum over temperature. The AD8418A rejects PWM input common-mode voltages in the −2 V to +70 V (with a 5 V supply) range. Monitoring the current on the motor phase allows sampling of the current at any point and provides diagnostic information, such as a short to GND and battery. Refer to Figure 35 for the typical phase current measurement setup with the AD8418A.

H-Bridge Motor Control

Another typical application for the AD8418A is to form part of the control loop in H-bridge motor control. In this case, place the shunt resistor in the middle of the H-bridge to accurately measure current in both directions by using the shunt available at the motor (see Figure 34). Using an amplifier and shunt in this location is a better solution than a ground referenced op amp because ground is not typically a stable reference voltage in this type of application. The instability of the ground reference causes inaccuracies in the measurements that can be made with a simple ground referenced op amp. The AD8418A measures current in both directions as the H-bridge switches and the motor changes direction. The output of the AD8418A is configured in an external referenced bidirectional mode (see the Bidirectional Operation section).

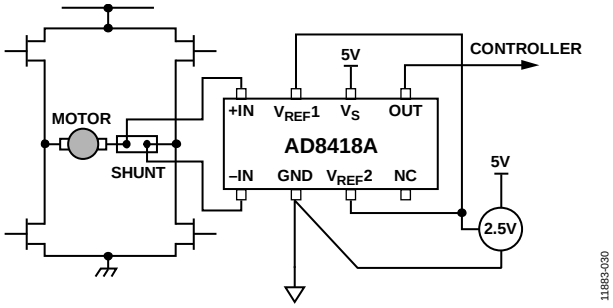

Figure 34. H-Bridge Motor Control

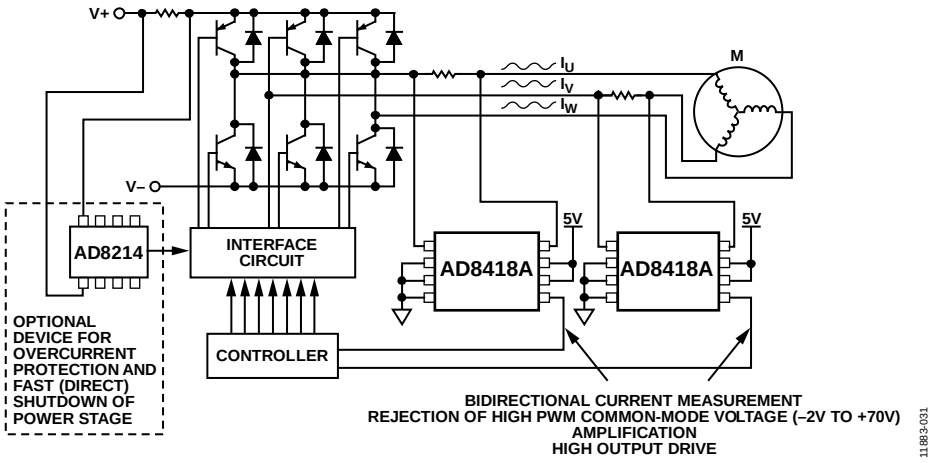

Figure 35. 3-Phase Motor Control

SOLENOID CONTROL

High-Side Current Sense with a Low-Side Switch

In the case of a high-side current sense with a low-side switch, the PWM control switch is ground referenced. Tie an inductive load (solenoid) to a power supply and place a resistive shunt between the switch and the load (see Figure 36). An advantage of placing the shunt on the high side is that the entire current, including the recirculation current, is measurable because the shunt remains in the loop when the switch is off. In addition, diagnostics are enhanced because shorts to ground are detected with the shunt on the high side.

In this circuit configuration, when the switch is closed, the common-mode voltage decreases to near the negative rail. When the switch is open, the voltage reversal across the inductive load causes the common-mode voltage to be held one diode drop above the battery by the clamp diode.

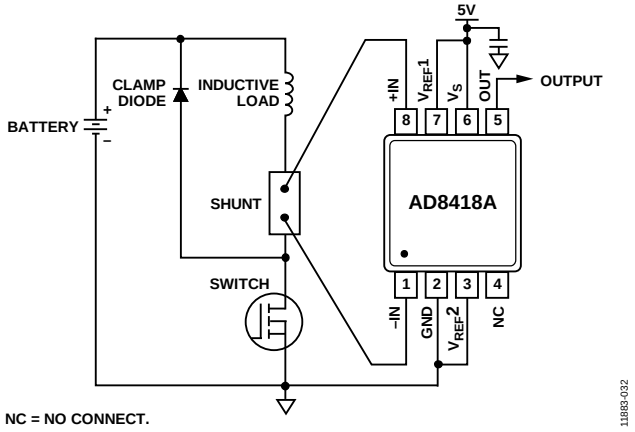

Figure 36. Low-Side Switch

High-Side Current Sense with a High-Side Switch

The high-side current sense with a high-side switch configuration minimizes the possibility of unexpected solenoid activation and excessive corrosion (see Figure 37). In this case, both the switch and the shunt are on the high side. When the switch is off, the battery is removed from the load, which prevents damage from potential shorts to ground while still allowing the recirculating current to be measured and to provide diagnostics. Removing the power supply from the load for the majority of the time that the switch is open minimizes the corrosive effects that can be caused by the differential voltage between the load and ground.

When using a high-side switch, the battery voltage is connected to the load when the switch is closed, causing the common-mode voltage to increase to the battery voltage. In this case, when the switch is open, the voltage reversal across the inductive load causes the common-mode voltage to be held one diode drop below ground by the clamp diode.

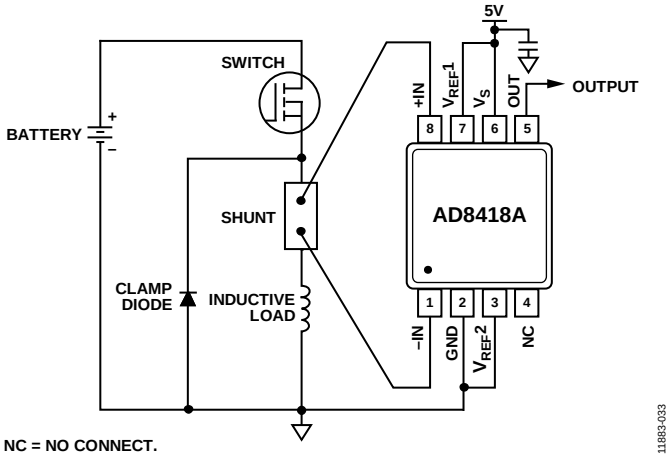

Figure 37. High-Side Switch

High Rail Current Sensing

In the high rail, current sensing configuration, the shunt resistor is referenced to the battery. High voltage is present at the inputs of the current sense amplifier. When the shunt is battery referenced, the AD8418A produces a linear ground referenced analog output. Additionally, the AD8214 provides an overcurrent detection signal in as little as 100 ns (see Figure 38). This feature is useful in high current systems where fast shutdown in overcurrent conditions is essential.

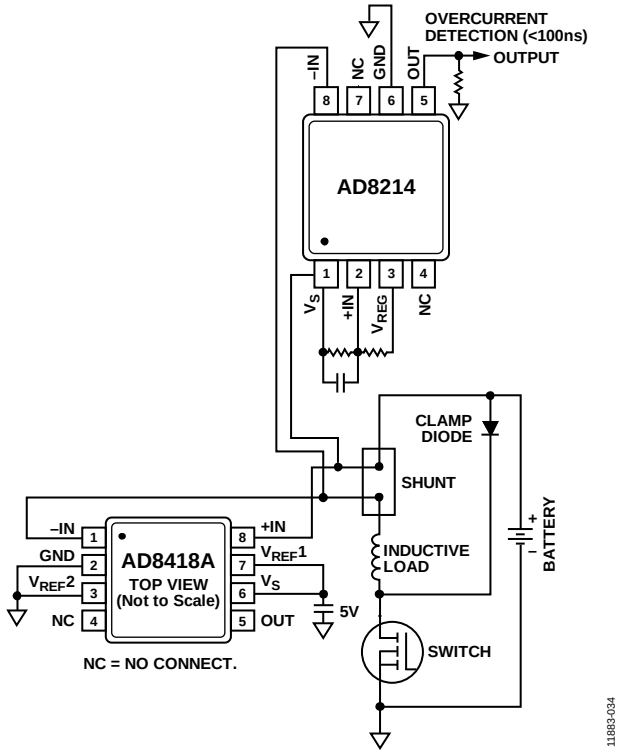

Figure 38. High Rail Current Sensing

OUTLINE DIMENSIONS

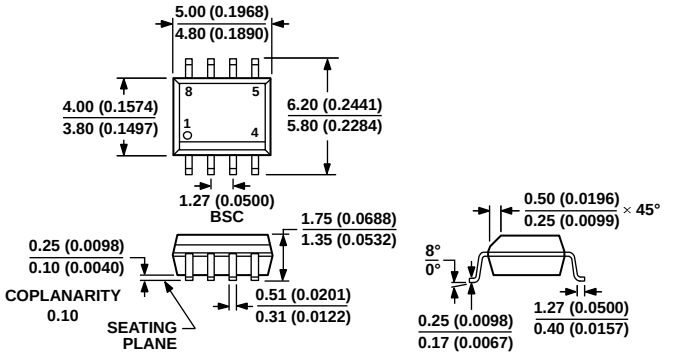

COMPLIANT TO JEDEC STANDARDS MS-012-AA

CONTROLLING DIMENSIONS ARE IN MILLIMETERS; INCH DIMENSIONS (IN PARENTHESES) ARE ROUNDED-OFF MILLIMETER EQUIVALENTS FOR REFERENCE ONLY AND ARE NOT APPROPRIATE FOR USE IN DESIGN.

012407-A

Figure 39. 8-Lead Standard Small Outline Package [SOIC_N]
Narrow Body
(R-8)
Dimensions shown in millimeters and (inches)

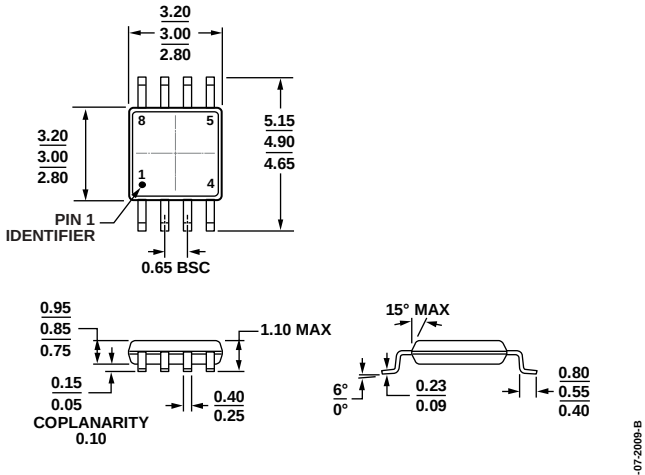

COMPLIANT TO JEDEC STANDARDS MO-187-AA

10-07-2009-B

Figure 40. 8-Lead Mini Small Outline Package [MSOP]
(RM-8)
Dimensions shown in millimeters

ORDERING GUIDE

Model[1, 2]	Temperature Range	Package Description	Package Option	Marking Code
AD8418ABRMZ	−40°C to +125°C	8-Lead MSOP	RM-8	Y5J
AD8418ABRMZ-RL	−40°C to +125°C	8-Lead MSOP, 13″ Tape and Reel	RM-8	Y5J
AD8418AWBRMZ	−40°C to +125°C	8-Lead MSOP	RM-8	Y5G
AD8418AWBRMZ-RL	−40°C to +125°C	8-Lead MSOP, 13″ Tape and Reel	RM-8	Y5G
AD8418AWBRZ	−40°C to +125°C	8-Lead SOIC_N	R-8	
AD8418AWBRZ-RL	−40°C to +125°C	8-Lead SOIC_N, 13″ Tape and Reel	R-8	
AD8418AWHRZ	−40°C to +150°C	8-Lead SOIC_N	R-8	
AD8418AWHRZ-RL	−40°C to +150°C	8-Lead SOIC_N, 13″ Tape and Reel	R-8	
AD8418AWHRMZ	−40°C to +150°C	8-Lead MSOP	RM-8	Y5H
AD8418AWHRMZ-RL	−40°C to +150°C	8-Lead MSOP, 13″ Tape and Reel	RM-8	Y5H
AD8418AR-EVALZ		8-Lead SOIC_N Evaluation Board		
AD8418ARM-EVALZ		8-Lead MSOP Evaluation Board		

[1] Z = RoHS Compliant Part.
[2] W = Qualified for Automotive Applications.

AUTOMOTIVE PRODUCTS

The AD8418AW models are available with controlled manufacturing to support the quality and reliability requirements of automotive applications. Note that these automotive models may have specifications that differ from the commercial models; therefore, designers should review the Specifications section of this data sheet carefully. Only the automotive grade products shown are available for use in automotive applications. Contact your local Analog Devices account representative for specific product ordering information and to obtain the specific Automotive Reliability reports for these models.

©2013–2018 Analog Devices, Inc. All rights reserved. Trademarks and registered trademarks are the property of their respective owners.
D11883-0-12/18(D)

ООО «ЛайфЭлектроникс» “LifeElectronics” LLC

ИНН 7805602321 КПП 780501001 Р/С 40702810122510004610 ФАКБ "АБСОЛЮТ БАНК" (ЗАО) в г.Санкт-Петербурге К/С 30101810900000000703 БИК 044030703

Компания «Life Electronics» занимается поставками электронных компонентов импортного и отечественного производства от производителей и со складов крупных дистрибьюторов Европы, Америки и Азии.

С конца 2013 года компания активно расширяет линейку поставок компонентов по направлению коаксиальный кабель, кварцевые генераторы и конденсаторы (керамические, пленочные, электролитические), за счёт заключения дистрибьюторских договоров

Мы предлагаем:

- *Конкурентоспособные цены и скидки постоянным клиентам.*
- *Специальные условия для постоянных клиентов.*
- *Подбор аналогов.*
- *Поставку компонентов в любых объемах, удовлетворяющих вашим потребностям.*

- *Приемлемые сроки поставки, возможна ускоренная поставка.*
- *Доставку товара в любую точку России и стран СНГ.*
- *Комплексную поставку.*
- *Работу по проектам и поставку образцов.*
- *Формирование склада под заказчика.*

- *Сертификаты соответствия на поставляемую продукцию (по желанию клиента).*
- *Тестирование поставляемой продукции.*
- *Поставку компонентов, требующих военную и космическую приемку.*
- *Входной контроль качества.*
- *Наличие сертификата ISO.*

В составе нашей компании организован Конструкторский отдел, призванный помогать разработчикам, и инженерам.

Конструкторский отдел помогает осуществить:

- *Регистрацию проекта у производителя компонентов.*
- *Техническую поддержку проекта.*
- *Защиту от снятия компонента с производства.*
- *Оценку стоимости проекта по компонентам.*
- *Изготовление тестовой платы монтаж и пусконаладочные работы.*

Тел: +7 (812) 336 43 04 (многоканальный)
Email: org@lifeelectronics.ru

www.lifeelectronics.ru