Mini-Mac Applicator Specification Sheet Order No. 63830-0000

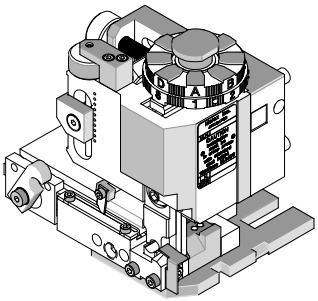

FEATURES

- Quick set-up time; plus the crimp height, track and feed adjustments can be preset in applicator
- Conductor and insulation rings allow quick adjustment for conductor and insulation diameter change
- Applicator designed to industry standard mounting and shut height 135.80mm (5.346")
- Directly adapts to most automatic wire processing machines. Optimum terminal feed/indexing can be obtained with the optional terminal guide assembly, Order No. 63830-0120. See page 6.

SCOPE

Mini-Fit Sr.™ Male and Female Crimp Terminals, 8 AWG

Terminal Series No.	Terminal Order No.		Wire Size		*Insulation Diameter		Strip Length	
			AWG	mm²	mm	In.	mm	In.
42815	42815-0030	42815-0032	8	8.50	5.00-6.75	.197-.266	9.00-10.00	.354-.394
	42815-0031							
	42815-0030	42815-0032	(2) 12	(2) 3.30	3.50-4.00	.138-.157	11.00-12.00	.433-.472
	42815-0031							
42817	42817-0030	42817-0130	8	8.50	5.00-6.75	.197-.266	9.00-10.00	.354-.394
	42817-0031	42817-0131						
	42817-0032	42817-0132						
	42817-0030	42817-0130	(2) 12	(2) 3.30	3.50-4.00	.138-.157	11.00-12.00	.433-.472
	42817-0031	42817-0131						
	42817-0032	42817-0132						
*On Mini-Fit Sr.™ 8 AWG terminal, the insulation is stripped in both the conductor and insulation grips.								

DEFINITION OF TERMS

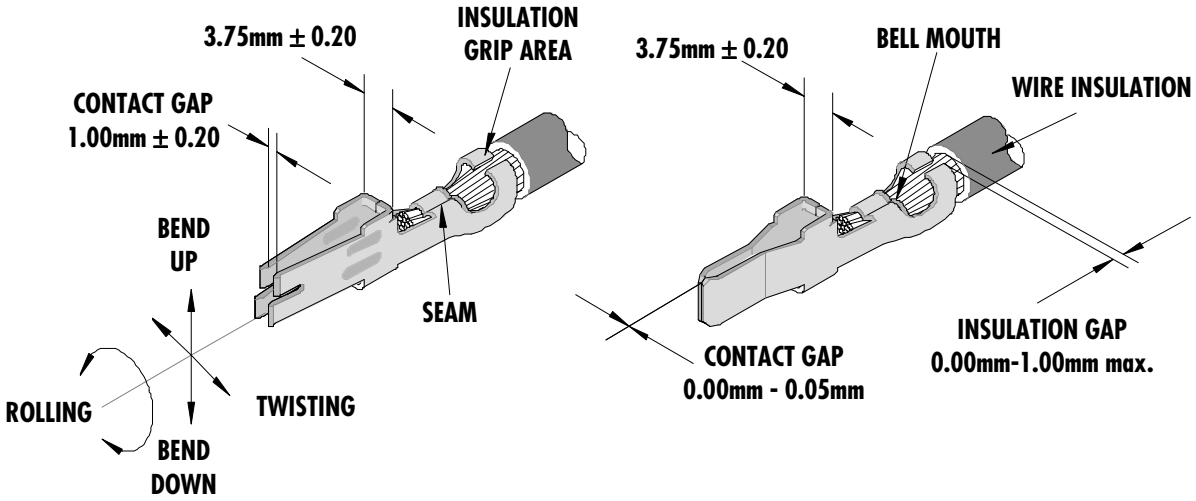

CRIMP SPECIFICATIONS

Terminal Series No.		Wire Size		Bell mouth		Cut-off Tab Max.		Conductor Brush	
		AWG	mm²	mm	In.	mm	In.	mm	In.
42815	42817	8	8.50-8.42	.20-.50	.008-.020	.30-.50	.012-.020	2.10-3.10	.083-.122
42815	42817	(2) 12	(2) 3.30	.20-.50	.008-.020	.30-.50	.012-.020	2.10-3.10	.083-.122

Terminal Series No.		Wire Size		Bend up	Bend down	Twist	Roll	Seam
		AWG	mm²	Degree		Degree		Seam shall not be open and no wire allowed out of the crimping area.
42815	42817	8	8.50-8.42	3	3	4	8	
42815	42817	(2) 12	(2) 3.30	3	3	4	8	

After crimping, the conductor profile should measure the following.

Terminal Series No.	Wire Size		Conductor				Pull Force Min.	
			Crimp Height		Crimp Width			
	AWG	mm²	mm	In.	mm	In.	N	Lb.
42815	8	8.50	3.20-3.30	.126-.130	3.90	.154	400.3	90.0
42815	*8	8.42	3.40-3.50	.134-.138	3.90	.154	400.3	90.0
42815	(2) 12	(2) 3.30	3.20-3.30	.126-.130	3.90	.154	311.4	70.0
42817	8	8.50	3.20-3.30	.126-.130	3.90	.154	400.3	90.0
42817	*8	8.42	3.40-3.50	.134-.138	3.90	.154	400.3	90.0
42817	(2) 12	(2) 3.30	3.20-3.30	.126-.130	3.90	.154	311.4	70.0

* 8 AWG Hi-Flex wire (665 strands). This type of wire has very fine strands.
Please note: Extra precaution must be maintained during stripping operation to prevent loosing or breaking strands.
Lost or broken strands may result in lower pull force strength and broken strands may cause a possible electric shock or shortage.

Pull Force should be measured with no influence from the insulation crimp.

The above specifications are guidelines to an optimum crimp.

Special Note:

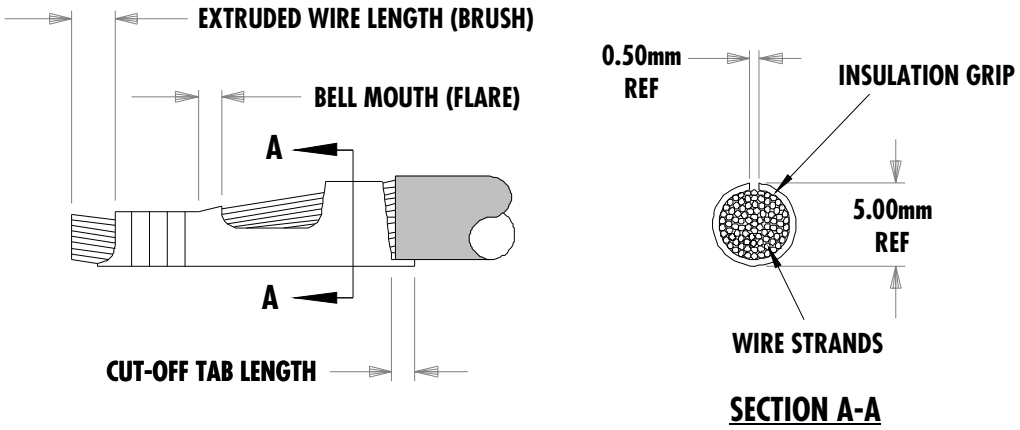

Figure 1

1. Cut-off Tab length below 0.30mm may cause the box dimension to be under recommendation. See Figure 1.

2. Wire insulation should not be crimped and insulation grip area should be formed to contain wire strands only.

3. Changing the insulation height setting may be needed to achieve the dimensions of the insulation grip in Section A-A. See Figure 1.

4. If wire strands are missed from conductor crimps, the operator should place the wires in the terminal, in the correct location, without using the wire stop/ stripper for locating the wire.

PARTS LIST

Mini-Mac Applicator 63830-0000				
Item	**Order No**	**Engineering No.**	**Description**	**Quantity**
Perishable Tooling				
	63830-0070	63830-0070	Tool Kit (All "Y" Items)	REF
1	63830-0001	63830-0001	Conductor Punch	1 Y
2	63830-0002	63830-0002	Conductor Anvil	1 Y
3	63830-0003	63830-0003	Insulation Punch	1 Y
4	63830-0004	63830-0004	Insulation Anvil	1 Y
5	63443-0045	63443-0045	Front Cut-off Plunger	1 Y
6	63443-0046	63443-0046	Front Cut-off Plunger Retainer	1 Y
Other Components				
7	11-18-5248	60827A115	Tooling Washer	1
8	63443-0009	63443-0009	Scrap Chute Front	1
9	63443-0021	63443-0021	Lower Tooling Key	1
10	63443-2401	63443-2401	Anvil Mount	1
11	63700-0539	63700-0539	Cut-Off Plunger Spring	1
12	63821-0012	63821-0012	Front Cover	1
13	63821-0015	63821-0015	Wire Stop	1
14	63830-0008	63830-0008	Front Plunger Striker	1
15	63830-0113	63830-0113	Rear Cover	1
15A	63830-0120	63830-0120	Optional Terminal Guide Assembly	0
Frame				
16	63800-4300	63800-4300	Mini-Mac Applicator Frame	1
17	69028-0806	69028-0806	Conductor Adjusting Cam	1
Hardware				
18	N/A	N/A	M3 by 6 Long SHCS	2**
19	N/A	N/A	M4 by 6 Long SHCS	1**
20	N/A	N/A	M4 by 12 Long BHCS	2**
21	N/A	N/A	M4 by 30 Long SHCS	1**
22	N/A	N/A	M4 by 50 Long SHCS	1**
23	N/A	N/A	M5 by 12 Long SHCS	1**
24	N/A	N/A	M8 by 20 Long BHCS	1**
25	N/A	N/A	2mm by 8 Long Roll Pin	1**
26	N/A	N/A	3mm by 6 Long Roll Pin	1**
** Available from an industrial supply company such as MSC (1-800-645-7270).				

Assembly Drawing

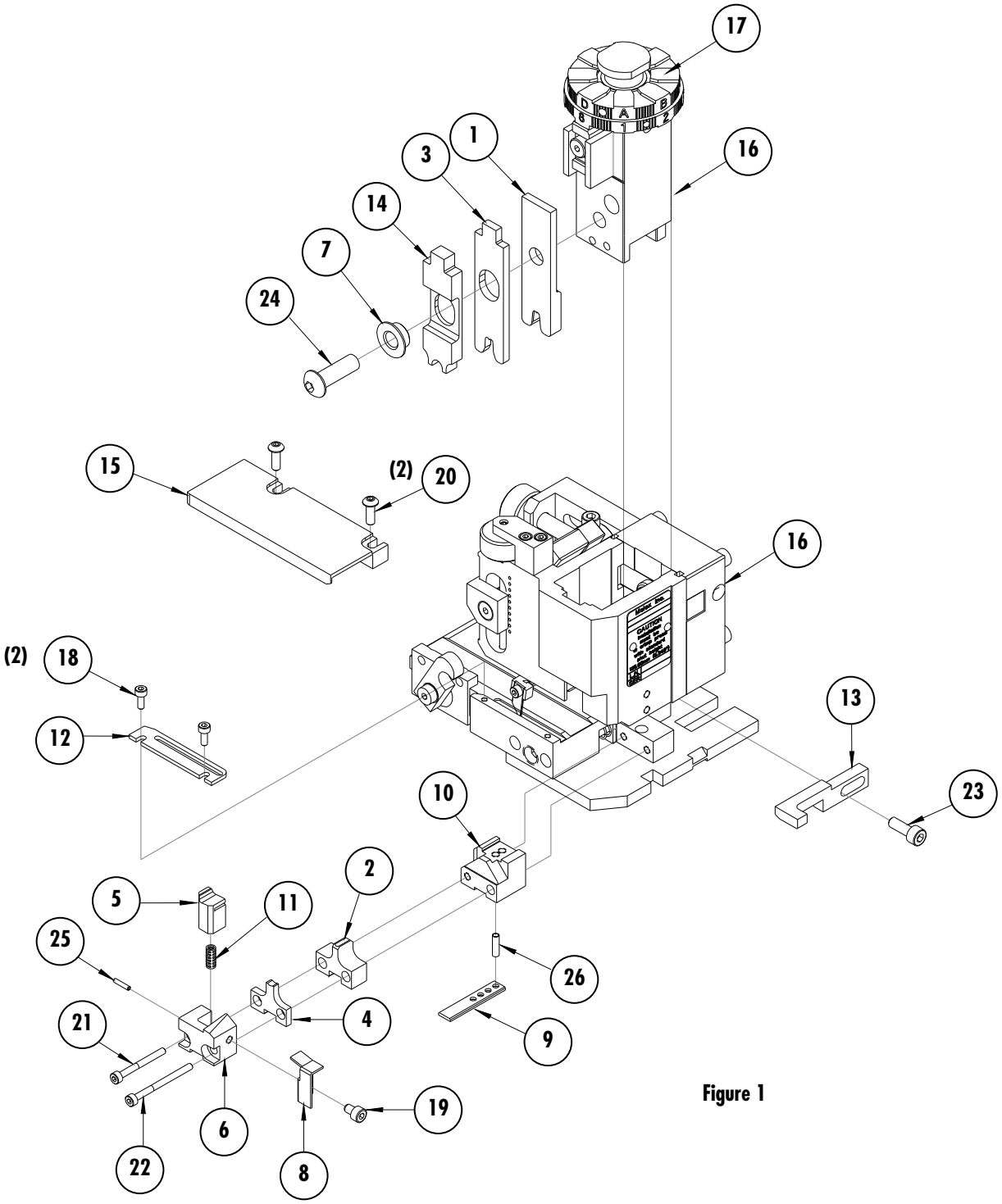

Figure 1

OPERATION:

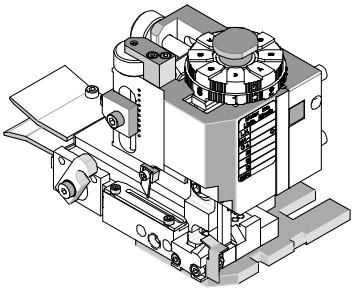

The Optional Terminal Guide Assembly helps to align slightly bent up or down terminals, entering the track. Recommended for use with wire processing equipment, or roughly handled terminal reels. To install the Optional Terminal Guide assembly follow the steps below.

1 Remove the M4 X 12 BHCS (2) from the existing rear cover (Part No. 63830-0113) on the applicator.
2 Remove the 63830-0113 rear cover.
3 Replace it with the 63830-0120 Optional Terminal Guide Assembly.
4 Replace the M4 X 12 BHCS (2).

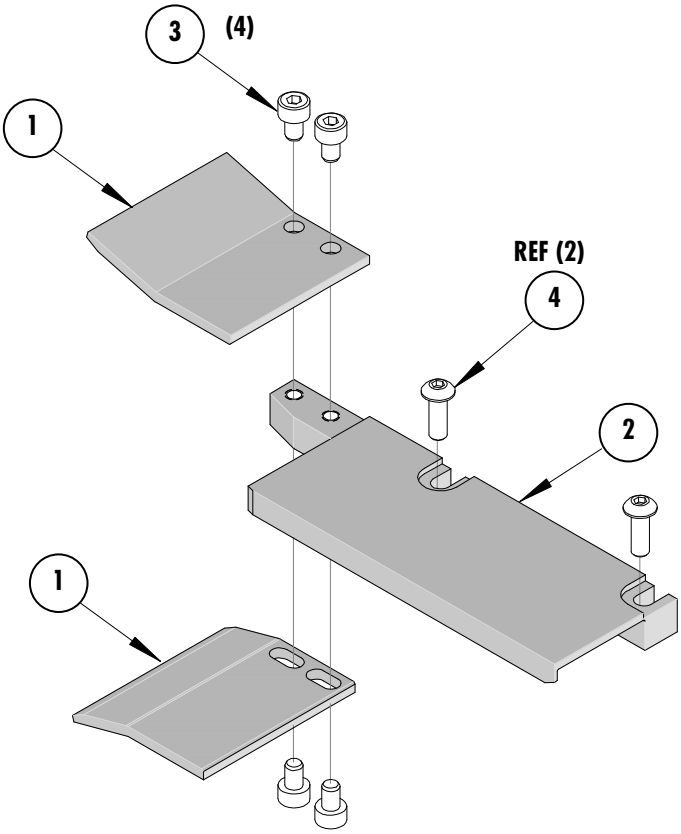

Optional Terminal Guide Assembly 63830-0120				
Item	**Order No**	**Engineering No.**	**Description**	**Quantity**
1	63830-0117	63830-0117	Terminal Lead-In	2
2	63830-0118	63830-0118	Rear Cover	1
Hardware				
3	N/A	N/A	M3 by 6 Long SHCS	4**
4	N/A	N/A	M4 by 12 Long BHCS	REF**
** Available from an industrial supply company such as MSC (1-800-645-7270).				

NOTES

1. Molex recommends an extra perishable tooling kit be maintained at your facility.
2. Verify tooling alignment by manually cycling the press and applicator before crimping under power. Check that all screws are tight.
3. Slugs, terminals, dirt, and oil should be kept clear of work area.
4. Wear safety glasses at all times.
5. For recommended maintenance refer to the Mini-Mac Manual.

CAUTION: This applicator should only be used in a press with a shut height of 135.80 mm (5.346"). Tooling damage could result at a lower setting

CAUTION: To prevent injury, never operate this applicator without the guards supplied with the press or wire-processing machine in place. Reference the press or wire processing manufacturer's instruction manual.

CAUTION: Molex crimp specifications are valid only when used with Molex terminals, applicators and tooling.

Contact Information

For more information on Molex application tooling please contact Molex at 1-800-786-6539.

Americas Headquarters
Lisle, Illinois 60532 U.S.A.
1-800-78MOLEX
amerinfo@molex.com

Far East North Headquarters
Yamato, Kanagawa, Japan
81-462-65-2324
feninfo@molex.com

Far East South Headquarters
Jurong, Singapore
65-6-268-6868
fesinfo@molex.com

European Headquarters
Munich, Germany
49-89-413092-0
eurinfo@molex.com

Corporate Headquarters
2222 Wellington Ct.
Lisle, IL 60532 U.S.A.
630-969-4550
Fax: 630-969-1352

Visit our Web site at http://www.molex.com

ООО «ЛайфЭлектроникс» “LifeElectronics” LLC

ИНН 7805602321 КПП 780501001 Р/С 40702810122510004610 ФАКБ "АБСОЛЮТ БАНК" (ЗАО) в г.Санкт-Петербурге К/С 30101810900000000703 БИК 044030703

Компания «Life Electronics» занимается поставками электронных компонентов импортного и отечественного производства от производителей и со складов крупных дистрибьюторов Европы, Америки и Азии.

С конца 2013 года компания активно расширяет линейку поставок компонентов по направлению коаксиальный кабель, кварцевые генераторы и конденсаторы (керамические, пленочные, электролитические), за счёт заключения дистрибьюторских договоров

Мы предлагаем:

- *Конкурентоспособные цены и скидки постоянным клиентам.*
- *Специальные условия для постоянных клиентов.*
- *Подбор аналогов.*
- *Поставку компонентов в любых объемах, удовлетворяющих вашим потребностям.*

- *Приемлемые сроки поставки, возможна ускоренная поставка.*
- *Доставку товара в любую точку России и стран СНГ.*
- *Комплексную поставку.*
- *Работу по проектам и поставку образцов.*
- *Формирование склада под заказчика.*

- *Сертификаты соответствия на поставляемую продукцию (по желанию клиента).*
- *Тестирование поставляемой продукции.*
- *Поставку компонентов, требующих военную и космическую приемку.*
- *Входной контроль качества.*
- *Наличие сертификата ISO.*

В составе нашей компании организован Конструкторский отдел, призванный помогать разработчикам, и инженерам.

Конструкторский отдел помогает осуществить:

- *Регистрацию проекта у производителя компонентов.*
- *Техническую поддержку проекта.*
- *Защиту от снятия компонента с производства.*
- *Оценку стоимости проекта по компонентам.*
- *Изготовление тестовой платы монтаж и пусконаладочные работы.*

Тел: +7 (812) 336 43 04 (многоканальный)
Email: org@lifeelectronics.ru

www.lifeelectronics.ru