THIS DRAWING IS UNPUBLISHED. RELEASED FOR PUBLICATION 20
© COPYRIGHT 20 BY TYCO ELECTRONICS CORPORATION ALL RIGHTS RESERVED.

| LOC | DIST |
|---|---|
| GP | 00 |

REVISIONS

| P | LTR | DESCRIPTION | DATE | DWN | APVD |
|---|---|---|---|---|---|
| | A | RELEASED FOR PRODUCTION | 07MAR2016 | TX | SH |

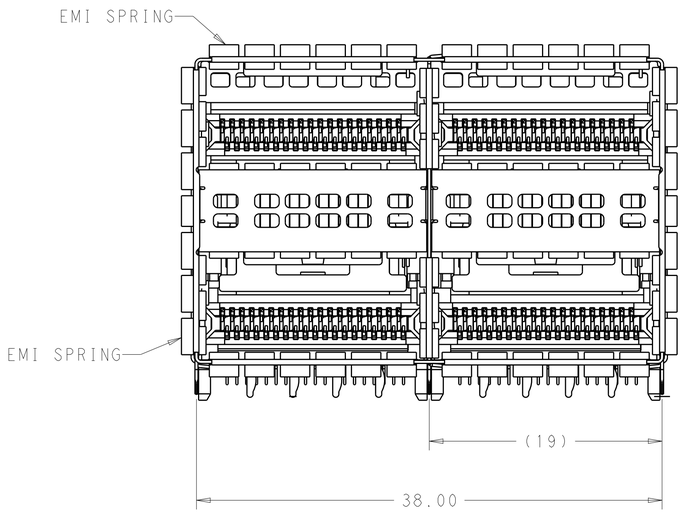


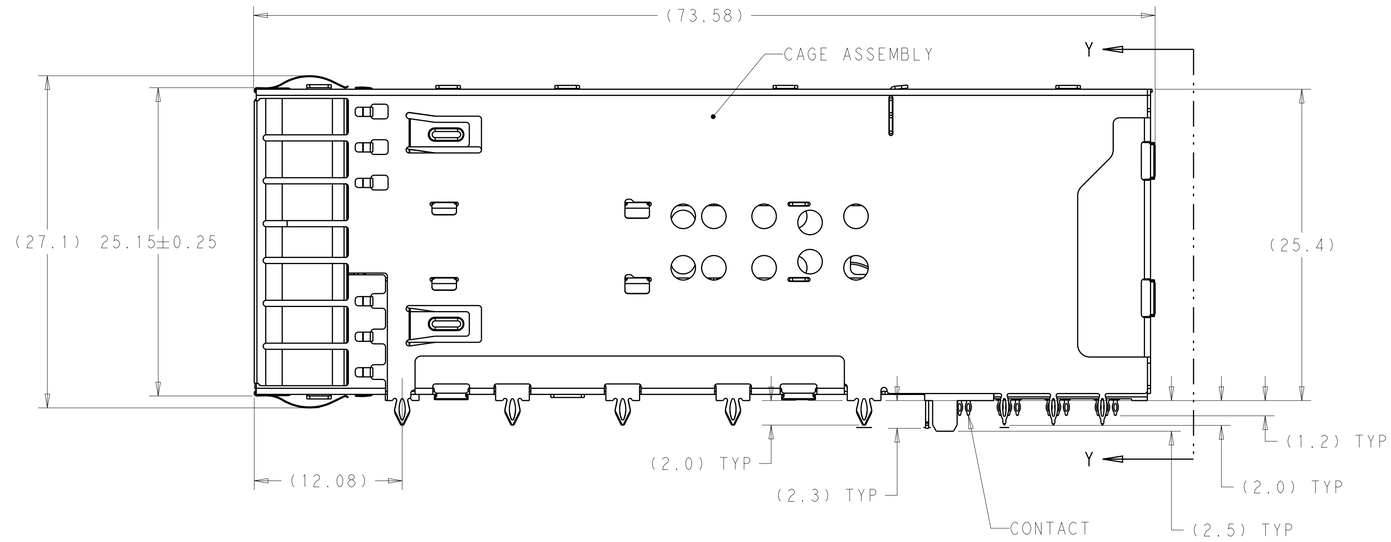


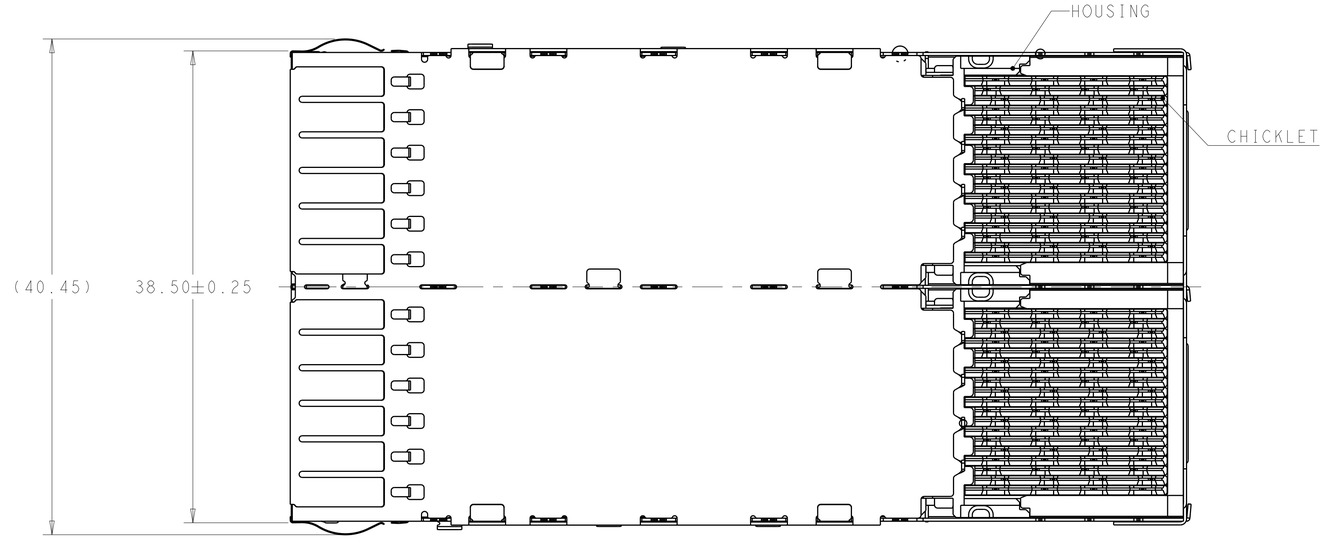


1. MATERIALS:
   CAGE ASSEMBLY- NICKEL SILVER ALLOY PER ASTM B 122.
   EMI SPRING- COPPER ALLOY, NICKEL PLATED.
   HOUSING- POLYESTER LCP WITH 94V-0.
   CHICKLET- POLYESTER LCP WITH 94V-0.
   CONTACT- COPPER ALLOY.
   LIGHTPIPE- POLYCARBONATE WITH 94V-0.

2. CONTACT FINISH: 0.76µm GOLD ON MATING END, 1.25µm MATT TIN ON SOLDER TAIL, ALL OVER 1.27µm NICKEL.

3. DATUM AND BASIC DIMENSION ESTABLISHED BY CUSTOMER.

4. MINIMUM PCB THICKNESS OF 1.57.

5. THE ENTIRE AREA OF THE CONNECTOR FOOTPRINT, INDICATED BY THE DASHED LINE, TO BE CONSIDERED THE KEEPOUT AREA FOR COMPONENTS.

6. CROSS-HATCHED AREAS REPRESENT ZONES ON THE PCB THAT COME IN CONTACT WITH OR BE IN CLOSE PROXIMITY TO THE PLASTIC HOUSING OR THE CONNECTOR CAGE. INDICATED AREAS TO BE CONSIDERED TRACE FREE.

7. PART NUMBER AND DATE CODE MAKED IN APPROXIMATE AREA SHOWN.

8. THESE HOLES ARE OPTIONAL WHEN PINS ON BACK OF CAGE ARE REMOVED.

9. CONTACT FINISH: 0.08µm MINIMUM GOLD OVER 0.68µm PALLADIUM-NICKEL ON MATING END, 1.25µm MATT TIN ON SOLDER TAIL, ALL OVER 1.27µm NICKEL.

10. HATCHED AREA IS PLACEMENT ZONE FOR LED. LED SHOULD BE CENTERED WITHIN ZONE. RECOMMEND 0805 PACKAGE.

| CONTACT FINISH | DESCRIPTION | PART NUMBER |
|---|---|---|
| 9 | LEFT INDICATOR DOWN | 2227667-6 |
| 9 | LEFT INDICATOR UP | 2227667-5 |
| 9 | NO LIGHTPIPE | 2227667-4 |
| 2 | LEFT INDICATOR DOWN | 2227667-3 |
| 2 | LEFT INDICATOR UP | 2227667-2 |
| 2 | NO LIGHTPIPE | 2227667-1 |

THIS DRAWING IS A CONTROLLED DOCUMENT.

DIMENSIONS: mm

TOLERANCES UNLESS OTHERWISE SPECIFIED:
0 PLC ±-
1 PLC ±0.25
2 PLC ±0.15
3 PLC ±-
4 PLC ±-
ANGLES ±-

MATERIAL - SEE NOTE 1

FINISH - SEE NOTE 2

DWN M.SHIRK 18JAN2013
CHK D.SZCZESNY 18JAN2013
APVD - -
PRODUCT SPEC 108-60102
APPLICATION SPEC 114-60015
WEIGHT -

TE Connectivity

NAME CAGE AND CONNECTOR ASSEMBLY, WITH EMI SPRING, THRU BEZEL, 2X2, ZOSFP+ STACKED

SIZE A1 | CAGE CODE 00779 | DRAWING NO C-2227667 | RESTRICTED TO -

CUSTOMER DRAWING | SCALE 4:1 | SHEET 1 OF 4 | REV A

4805 (3/11)

THIS DRAWING IS UNPUBLISHED. RELEASED FOR PUBLICATION 20
© COPYRIGHT 20 BY TYCO ELECTRONICS CORPORATION ALL RIGHTS RESERVED.

| LOC | DIST |
|---|---|
| | |

REVISIONS

| P | LTR | DESCRIPTION | DATE | DWN | APVD |
|---|---|---|---|---|---|
| | - | SEE SHEET 1 | - | - | - |

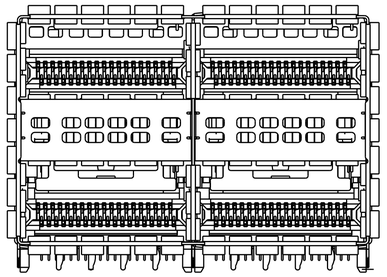

2227667-1 / 2227667-4
NO LIGHTPIPE IN ASSEMBLY
SCALE 3:1

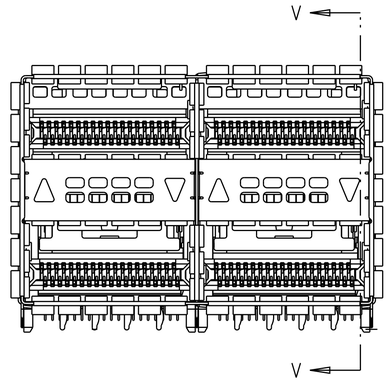


2227667-2 / 2227667-5
LEFT LIGHTPIPE INDICATOR
POINTING TO UPPER PORT
SCALE 3:1

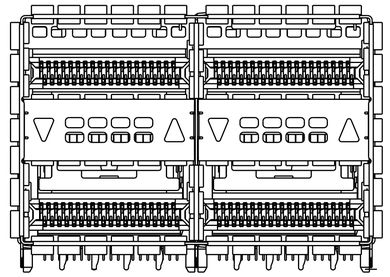

2227667-3 / 2227667-6
LEFT LIGHTPIPE INDICATOR
POINTING TO LOWER PORT
SCALE 3:1

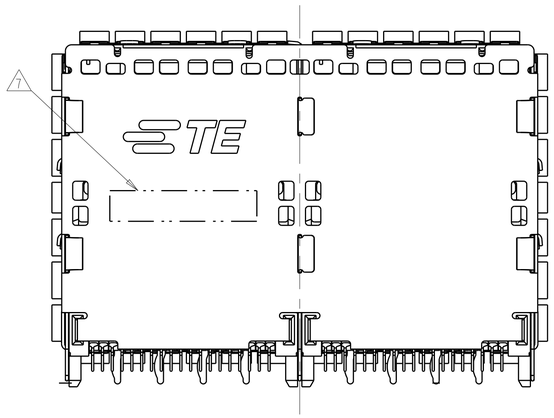


VIEW Y-Y

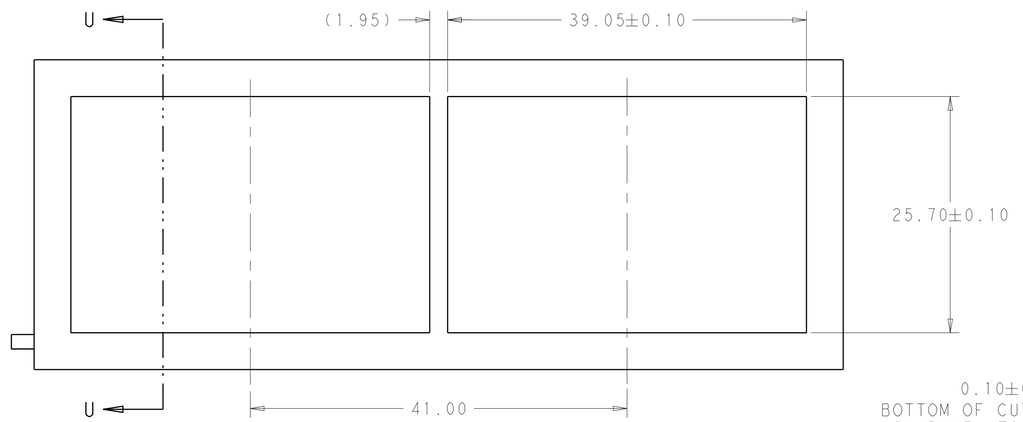


RECOMMENDED PANEL CUTOUT
AND PC BOARD, PANEL POSITION
SCALE 3:1

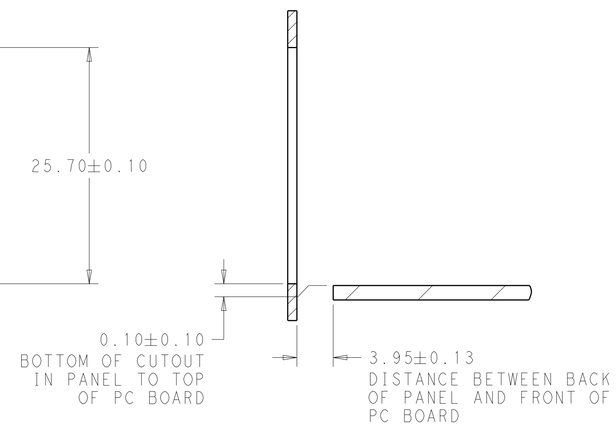


SECTION U-U

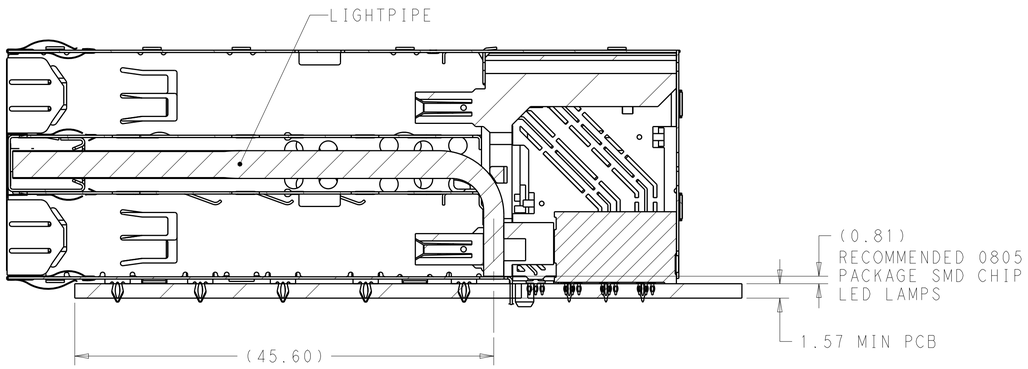


SECTION V-V
SCALE 3:1

| | | | |
|---|---|---|---|
| THIS DRAWING IS A CONTROLLED DOCUMENT. | DWN M.SHIRK 18JAN2013 | TE Connectivity | |
| DIMENSIONS: mm | TOLERANCES UNLESS OTHERWISE SPECIFIED: 0 PLC ±- 1 PLC ±0.25 2 PLC ±0.15 3 PLC ±- 4 PLC ±- ANGLES ±- | CHK D.SZCZESNY 18JAN2013 | NAME CAGE AND CONNECTOR ASSEMBLY, WITH EMI SPRING, THRU BEZEL, 2X2, ZQSFP+ STACKED |
| | | APVD - | |
| | | PRODUCT SPEC 108-60102 | |
| | | APPLICATION SPEC 114-60015 | SIZE A1 / CAGE CODE 00779 / DRAWING NO C-2227667 / RESTRICTED TO - |
| MATERIAL - SEE NOTE 1 | FINISH - SEE NOTE 2 | WEIGHT - | |
| | | CUSTOMER DRAWING | SCALE 4:1 / SHEET 2 OF 4 / REV A |

4805 (3/11)

THIS DRAWING IS UNPUBLISHED. RELEASED FOR PUBLICATION 20
© COPYRIGHT 20 BY TYCO ELECTRONICS CORPORATION ALL RIGHTS RESERVED.

| LOC | DIST | REVISIONS | | | | |
|---|---|---|---|---|---|---|
| | | P | LTR | DESCRIPTION | DATE | DWN | APVD |
| | | | - | SEE SHEET 1 | - | - | - |

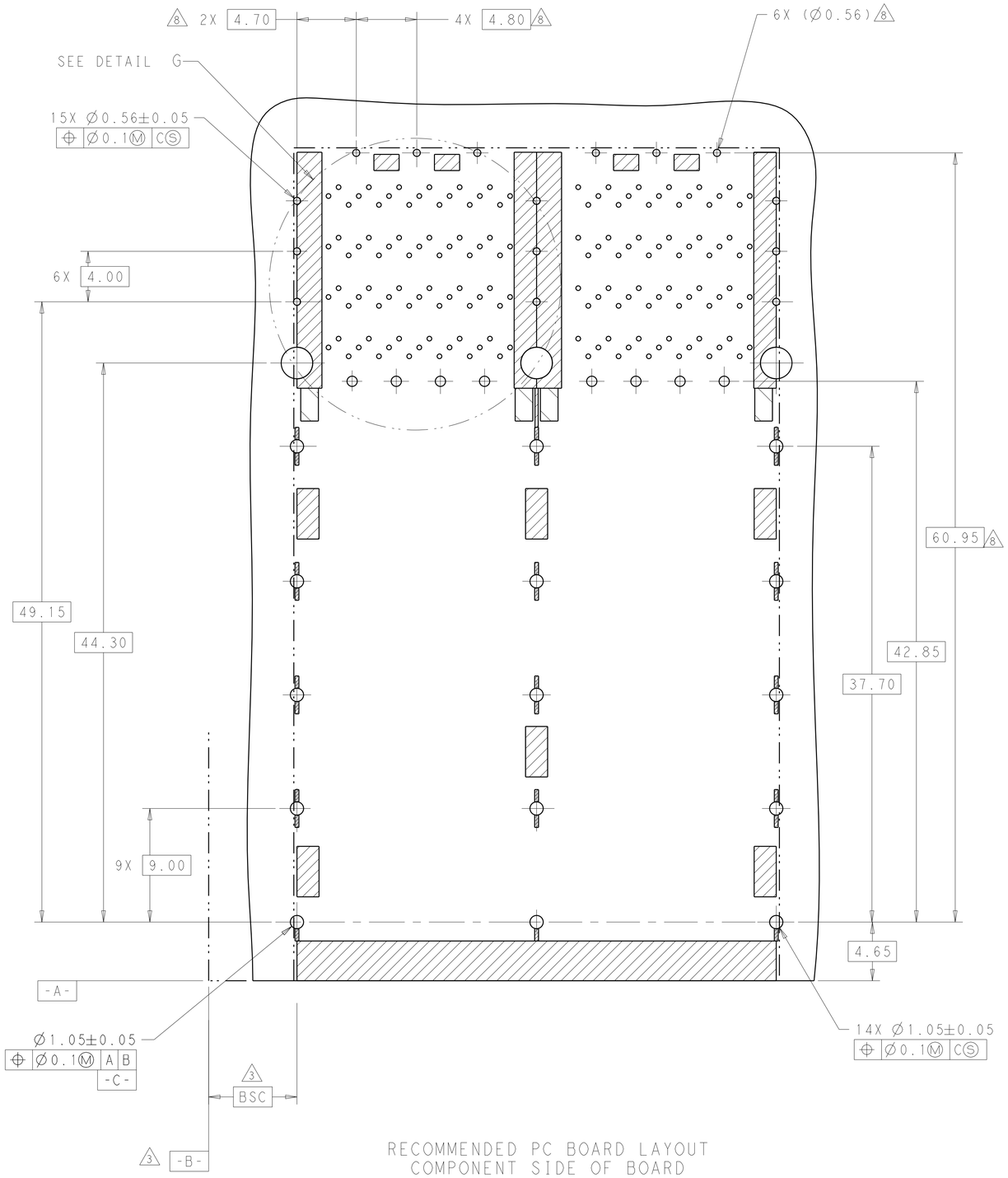


RECOMMENDED PC BOARD LAYOUT
COMPONENT SIDE OF BOARD
(PCB TOLERANCE ±0.05)
SCALE 5:1

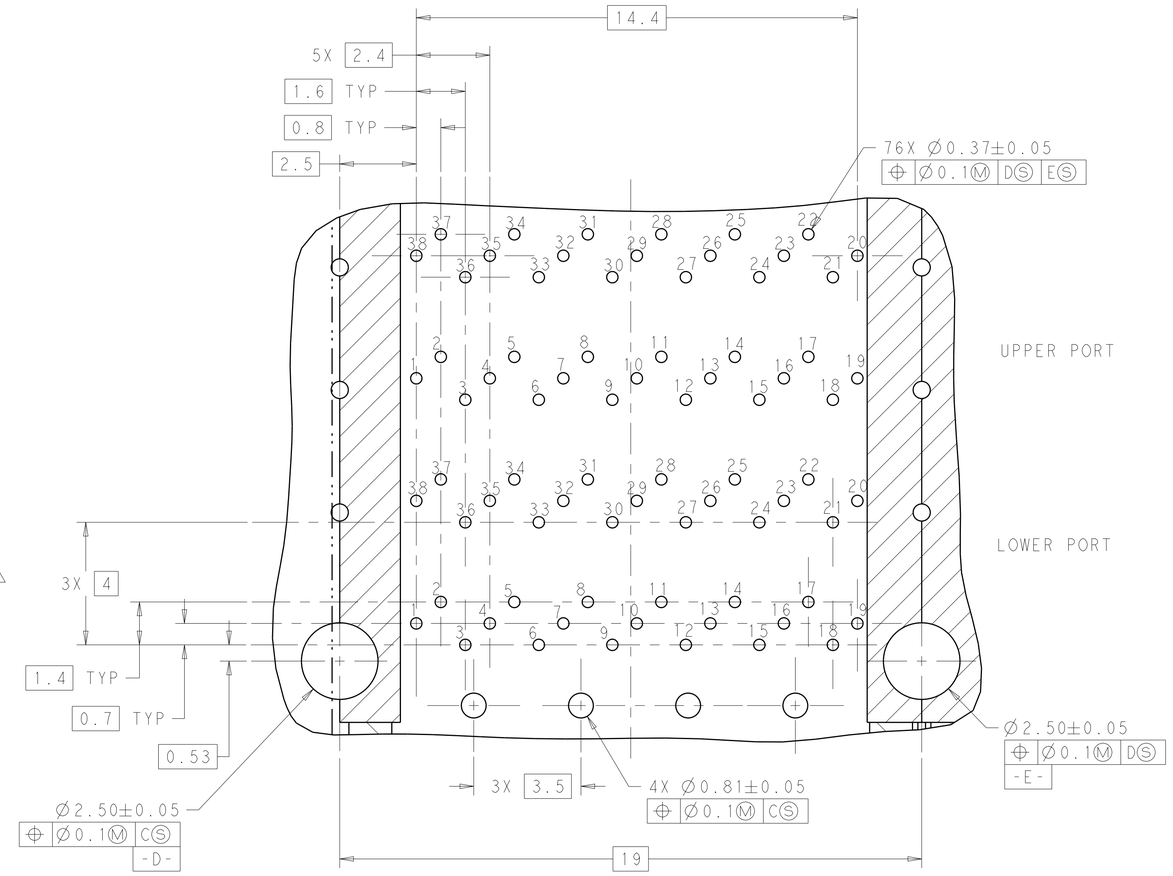


DETAIL G
SCALE 10:1

| | | | |
|---|---|---|---|
| THIS DRAWING IS A CONTROLLED DOCUMENT. | | DWN M.SHIRK 18JAN2013 | TE Connectivity |
| DIMENSIONS: mm | TOLERANCES UNLESS OTHERWISE SPECIFIED: 0 PLC ±- 1 PLC ±0.25 2 PLC ±0.15 3 PLC ±- 4 PLC ±- ANGLES ±- | CHK D.SZCZESNY 18JAN2013 | NAME CAGE AND CONNECTOR ASSEMBLY, WITH EMI SPRING, THRU BEZEL, 2X2, ZQSFP+ STACKED |
| | | APVD - | |
| | | PRODUCT SPEC 108-60102 | |
| | | APPLICATION SPEC 114-60015 | SIZE A1 / CAGE CODE 00779 / DRAWING NO C-2227667 / RESTRICTED TO - |
| MATERIAL - SEE NOTE 1 | FINISH - SEE NOTE 2 | WEIGHT - | |
| | | CUSTOMER DRAWING | SCALE 4:1 / SHEET 3 OF 4 / REV A |

4805 (3/11)

THIS DRAWING IS UNPUBLISHED. RELEASED FOR PUBLICATION 20
© COPYRIGHT 20 BY TYCO ELECTRONICS CORPORATION ALL RIGHTS RESERVED.

| LOC | DIST |
|---|---|
| | |

REVISIONS

| P | LTR | DESCRIPTION | DATE | DWN | APVD |
|---|---|---|---|---|---|
| | - | SEE SHEET 1 | - | - | - |

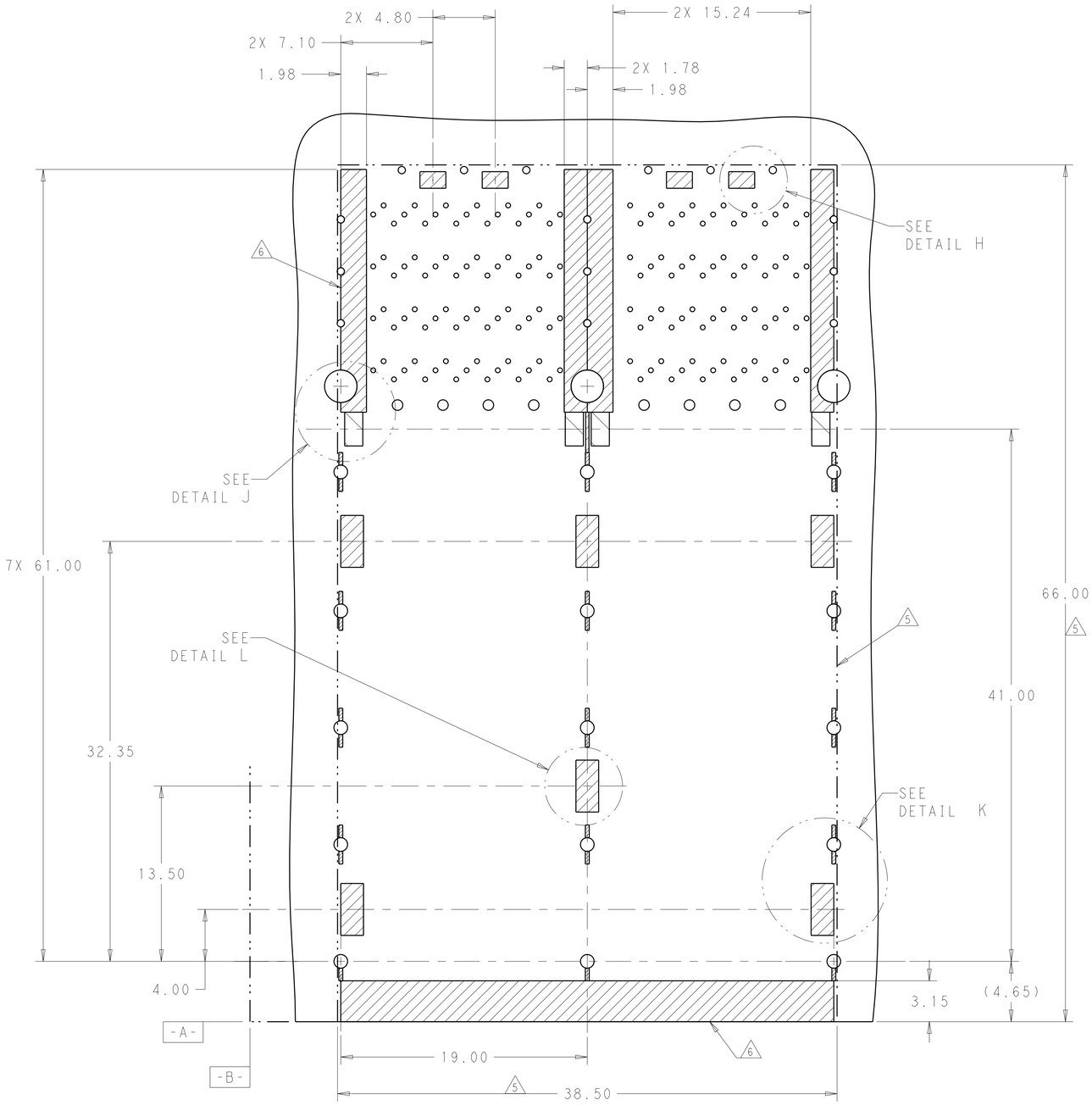


KEEPOUT AREAS
COMPONENT SIDE OF BOARD
SCALE 5:1

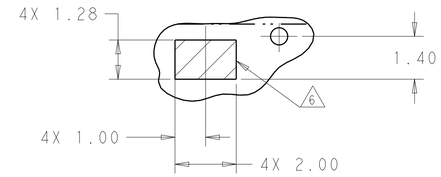


DETAIL H
SCALE 10:1

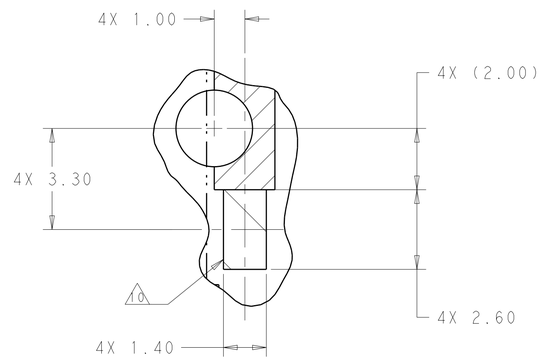


DETAIL J
SCALE 10:1

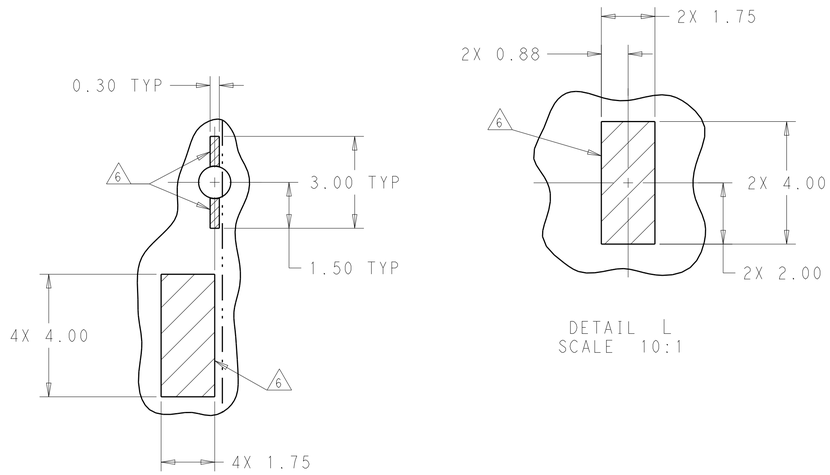


DETAIL K
SCALE 10:1

DETAIL L
SCALE 10:1

| | | | |
|---|---|---|---|
| THIS DRAWING IS A CONTROLLED DOCUMENT. | DWN M.SHIRK 18JAN2013 | TE Connectivity | |
| DIMENSIONS: mm | CHK D.SZCZESNY 18JAN2013 | NAME CAGE AND CONNECTOR ASSEMBLY, WITH EMI SPRING, THRU BEZEL, 2X2, ZQSFP+ STACKED | |
| TOLERANCES UNLESS OTHERWISE SPECIFIED: 0 PLC ±- 1 PLC ±0.25 2 PLC ±0.15 3 PLC ±- 4 PLC ±- ANGLES ±- | APVD - | | |
| | PRODUCT SPEC 108-60102 | | |
| | APPLICATION SPEC 114-60015 | SIZE A1 / CAGE CODE 00779 / DRAWING NO C-2227667 | RESTRICTED TO - |
| MATERIAL - SEE NOTE 1 | FINISH - SEE NOTE 2 | WEIGHT - | |
| | | CUSTOMER DRAWING | SCALE 4:1 / SHEET 4 OF 4 / REV A |

ООО «ЛайфЭлектроникс» “LifeElectronics” LLC

ИНН 7805602321 КПП 780501001 Р/С 40702810122510004610 ФАКБ "АБСОЛЮТ БАНК" (ЗАО) в г.Санкт-Петербурге К/С 30101810900000000703 БИК 044030703

*Компания «Life Electronics» занимается поставками электронных компонентов импортного и отечественного производства от производителей и со складов крупных дистрибьюторов Европы, Америки и Азии.*

*С конца 2013 года компания активно расширяет линейку поставок компонентов по направлению коаксиальный кабель, кварцевые генераторы и конденсаторы (керамические, пленочные, электролитические), за счёт заключения дистрибьюторских договоров*

*Мы предлагаем:*

- *Конкурентоспособные цены и скидки постоянным клиентам.*
- *Специальные условия для постоянных клиентов.*
- *Подбор аналогов.*
- *Поставку компонентов в любых объемах, удовлетворяющих вашим потребностям.*

- *Приемлемые сроки поставки, возможна ускоренная поставка.*
- *Доставку товара в любую точку России и стран СНГ.*
- *Комплексную поставку.*
- *Работу по проектам и поставку образцов.*
- *Формирование склада под заказчика.*

- *Сертификаты соответствия на поставляемую продукцию (по желанию клиента).*
- *Тестирование поставляемой продукции.*
- *Поставку компонентов, требующих военную и космическую приемку.*
- *Входной контроль качества.*
- *Наличие сертификата ISO.*

*В составе нашей компании организован Конструкторский отдел, призванный помогать разработчикам, и инженерам.*

*Конструкторский отдел помогает осуществить:*

- *Регистрацию проекта у производителя компонентов.*
- *Техническую поддержку проекта.*
- *Защиту от снятия компонента с производства.*
- *Оценку стоимости проекта по компонентам.*
- *Изготовление тестовой платы монтаж и пусконаладочные работы.*

*Тел: +7 (812) 336 43 04 (многоканальный)*
*Email: org@lifeelectronics.ru*

***www.lifeelectronics.ru***