DESCRIPTION

Demonstration circuit 1193 is a triple output regulator consisting of three constant-frequency step-down converters integrated into LTC3545/-1. DC1193 has an input voltage range of 2.25V to 5.5V, with regulators capable of delivering 800mA of load current on each output. The three regulators operate independently with individual RUN pins and enter pulse skipping mode at low loads for reducing output ripple. In shutdown, the DC1193 draws less than 1uA total. The DC1193 is a very efficient circuit with efficiency reading above 90%. The LTC3545 comes in a 16-pin QFN package, which has an exposed pad on the bottomside of the IC for better thermal performance. High operating frequency of 2.25MHz allows exclusive use of the small size, low profile surface mount components. These features plus internal compensation circuits, make the DC1193 demo board an ideal circuit for use in battery-powered, hand-held applications. DC1193A-A is a demoboard for LTC3545 and DC1193A-B is a demoboard for LCT3545-1.

Design files for this circuit board are available. Call the LTC factory.

LTC is a trademark of Linear Technology Corporation

Table 1. Performance Summary (T_A = 25°C)

PARAMETER	CONDITIONS	VALUE
Minimum Input Voltage		2.25V
Maximum Input Voltage		5.5V
Output Voltage Regulation VOUT1	V_{IN} = 2.25V to 5.5V, I_{OUT} = 0A to 800mA	1.8V ±2%
Typical Output Ripple VOUT1	V_{IN} = 4V, I_{OUT} = 800mA (20 MHz BW)	<15mV_{P-P}
Output Voltage Regulation VOUT2	V_{IN} = 2.25V to 5.5V, I_{OUT} = 0A to 800mA	1.2V ±2%
Typical Output Ripple VOUT2	V_{IN} = 4V, I_{OUT} = 800mA (20 MHz BW)	<15mV_{P-P}
Output Voltage Regulation VOUT3	V_{IN} = 2.25V to 5.5V, I_{OUT} = 0A to 800mA	1.5V ±2%
Typical Output Ripple VOUT3	V_{IN} = 4V, I_{OUT} = 800mA (20 MHz BW)	<15mV_{P-P}
Nominal Switching Frequency		2.25 MHz

QUICK START PROCEDURE

Demonstration Circuit 1193 is easy to set up to evaluate the performance of the LTC3545/-1. For proper measurement equipment configuration, set up the circuit according to the diagram in Figure 1.

NOTE: When measuring the input or output voltage ripple, care must be taken to avoid a long ground lead on the oscilloscope probe. Measure the input or output voltage ripple by touching the probe tip directly across the VIN or VOUT and GND terminals. See the Measurement Equipment Set-up diagram in Figure 2 for proper scope probe technique.

1. Connect the input power supply to the VIN and GND terminals. Connect the loads between the matching VOUT and GND terminals. Refer to Figure 1 for the proper measurement equipment setup. Make sure that loads on outputs VOUT1 to VOUT3 do not exceed 800mA, on each output (all three outputs can be loaded at the same time)
2. Apply 5V at VIN and than insert RUN jumper shunts JP1 through JP3 into the ON positions.
3. Measure all four outputs VOUT1 through VOUT3; they should read 1.8V, 1.2V and 1.5V correspondingly. All output voltages should be within +/- 2% tolerance.
4. Vary the input voltage from 5.5V to 2.25V; all four output voltages should be within +/- 2% tolerance.
5. Vary the VOUT1 load current from 0 to 800mA. Each output voltage should be within a tolerance of +/- 2%.
6. Vary the VOUT2 load currents from 0 to 800mA. Each output voltage should be within a tolerance of +/- 2%.
7. Vary the VOUT3 load current from 0 to 800mA. Each output voltage should be within a tolerance of +/- 2%.
8. To turn either output off set corresponding jumper into OFF position.

For DC1193A-A only

To synchronize converter to external clock move jumper J4 to **Sync** position (contacts 1 and 2) and apply synchronization pulses in 1MHz to 3MHz frequency range to SYNC pin, see datasheet LTC3545 for details. For converter to operate in Pulse skipping mode move jumper J4 to **Pulse Skip** position (contacts 2 and 3). For converter to operate in Burst mode move jumper J4 into **Burst** position (contacts 3 and 4).

Warning - If the power for the demo board is carried in long leads, the input voltage at the part could “ring”, which could affect the operation of the converter. To eliminate the ringing, insert a small tantalum capacitor (for instance, AVX part # TAJW686M010) on the pads between the input power and return terminals on the bottom of the demo board. The (greater) ESR of the tantalum will dampen the (possible) ringing voltage due to the use of long input leads. On a normal, typical PCB, with short traces, the capacitor is not needed.

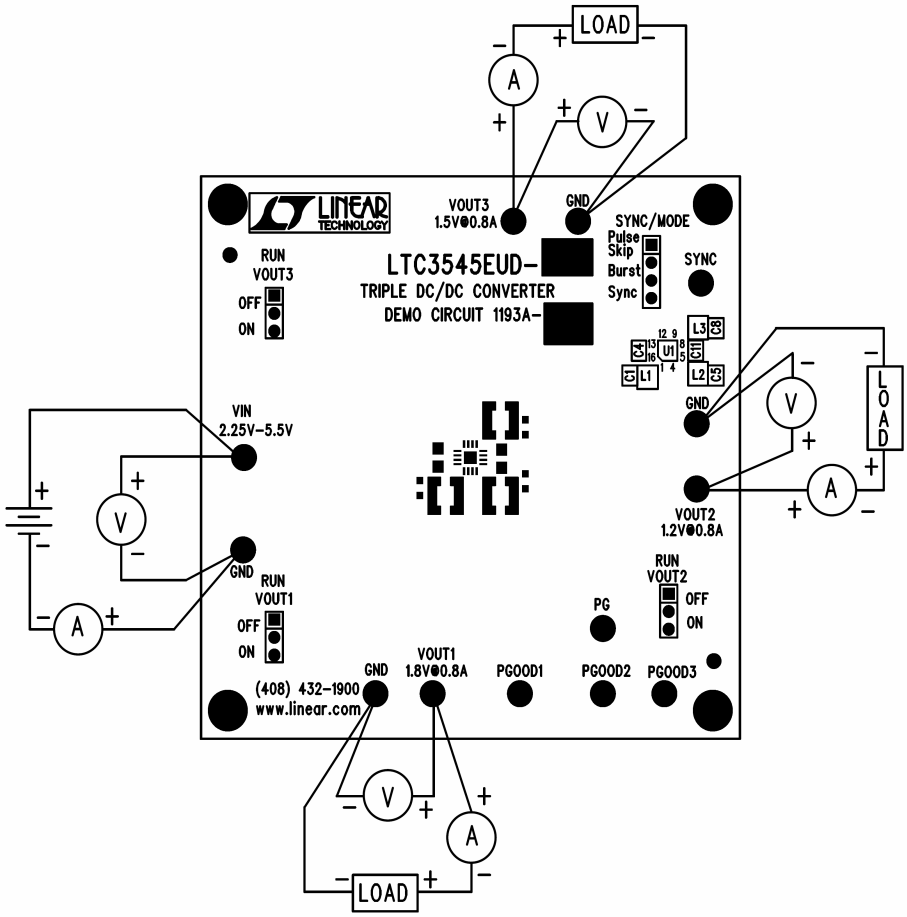

Figure 1. Proper Measurement Equipment Setup

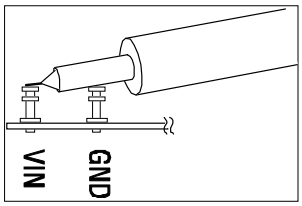

Figure 2. Measuring Input or Output Ripple

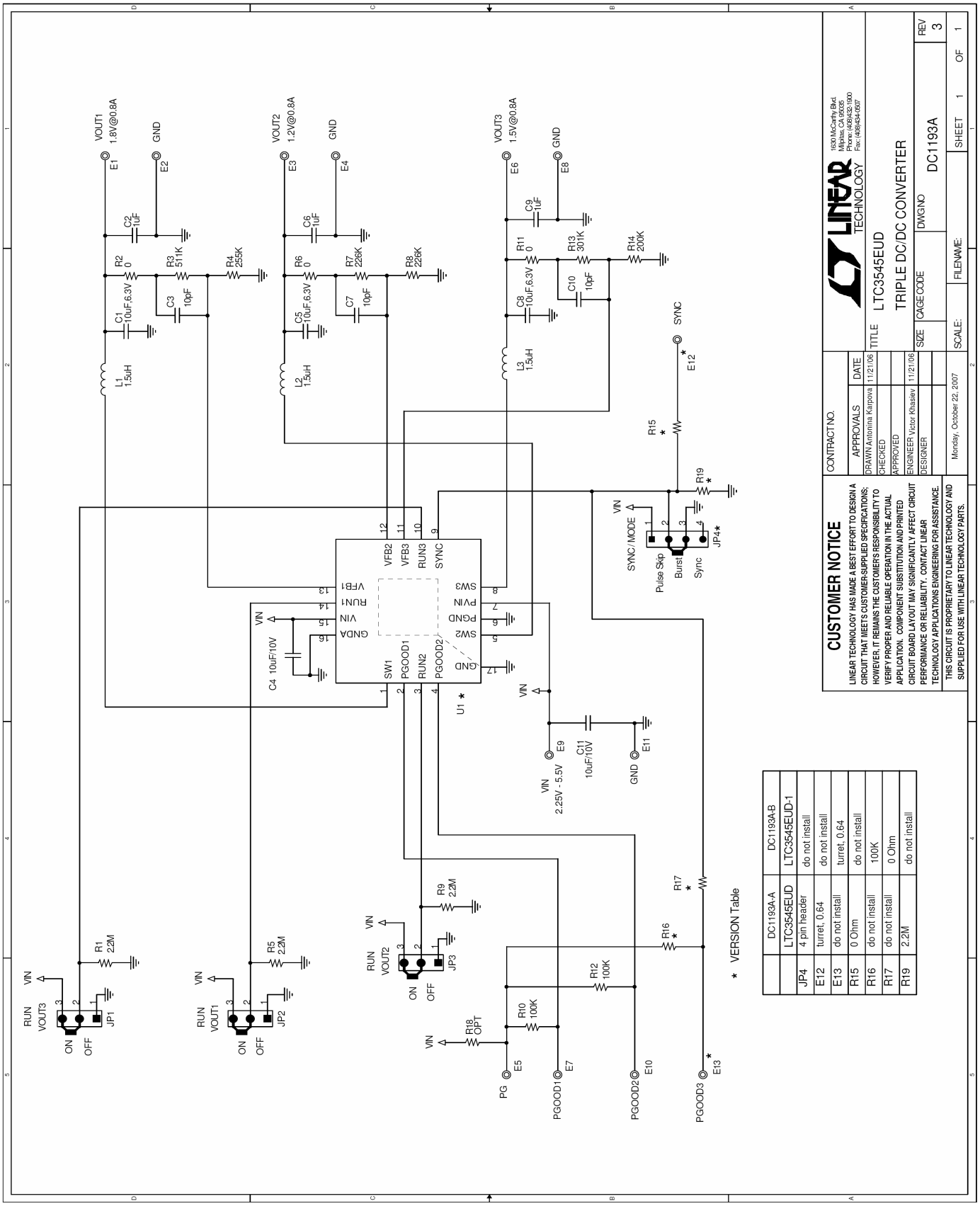

	DC1193A-A	DC1193A-B
	LTC3545EUD	LTC3545EUD-1
JP4	4 pin header	do not install
E12	turret, 0.64	do not install
E13	do not install	turret, 0.64
R15	0 Ohm	do not install
R16	do not install	100K
R17	do not install	0 Ohm
R19	2.2M	do not install

* VERSION Table

ООО «ЛайфЭлектроникс» “LifeElectronics” LLC

ИНН 7805602321 КПП 780501001 Р/С 40702810122510004610 ФАКБ "АБСОЛЮТ БАНК" (ЗАО) в г.Санкт-Петербурге К/С 30101810900000000703 БИК 044030703

Компания «Life Electronics» занимается поставками электронных компонентов импортного и отечественного производства от производителей и со складов крупных дистрибьюторов Европы, Америки и Азии.

С конца 2013 года компания активно расширяет линейку поставок компонентов по направлению коаксиальный кабель, кварцевые генераторы и конденсаторы (керамические, пленочные, электролитические), за счёт заключения дистрибьюторских договоров

Мы предлагаем:

- *Конкурентоспособные цены и скидки постоянным клиентам.*
- *Специальные условия для постоянных клиентов.*
- *Подбор аналогов.*
- *Поставку компонентов в любых объемах, удовлетворяющих вашим потребностям.*

- *Приемлемые сроки поставки, возможна ускоренная поставка.*
- *Доставку товара в любую точку России и стран СНГ.*
- *Комплексную поставку.*
- *Работу по проектам и поставку образцов.*
- *Формирование склада под заказчика.*

- *Сертификаты соответствия на поставляемую продукцию (по желанию клиента).*
- *Тестирование поставляемой продукции.*
- *Поставку компонентов, требующих военную и космическую приемку.*
- *Входной контроль качества.*
- *Наличие сертификата ISO.*

В составе нашей компании организован Конструкторский отдел, призванный помогать разработчикам, и инженерам.

Конструкторский отдел помогает осуществить:

- *Регистрацию проекта у производителя компонентов.*
- *Техническую поддержку проекта.*
- *Защиту от снятия компонента с производства.*
- *Оценку стоимости проекта по компонентам.*
- *Изготовление тестовой платы монтаж и пусконаладочные работы.*

Тел: +7 (812) 336 43 04 (многоканальный)
Email: org@lifeelectronics.ru

www.lifeelectronics.ru