SL3S1203_1213

UCODE G2iL and G2iL+

Rev. 4.5 — 12 February 2019
178845

Product data sheet
COMPANY PUBLIC

1 General description

NXP's UCODE G2iL series transponder ICs offer leading-edge read range and support industry-first features such as a Tag Tamper Alarm, Data Transfer, Digital Switch, and advanced privacy-protection modes.

Very high chip sensitivity (-18 dBm) enables longer read ranges with simple, single-port antenna designs. When connected to a power supply, the READ as well as the WRITE range can be boosted to a sensitivity of -27 dBm. In fashion and retail the UCODE G2iL series improve read rates and provide for theft deterrence. For consumer electronics the UCODE G2iL series is suited for device configuration, activation, production control, and PCB tagging. In authentication applications the transponders can be used to protect brands and guard against counterfeiting. They can also be used to tag containers, electronic vehicles, airline baggage, and more.

In addition to the EPC specifications the G2iL offers an integrated Product Status Flag (PSF) feature and read protection of the memory content.

On top of the G2iL features the G2iL+ offers an integrated tag tamper alarm, RF field detection, digital switch, external supply mode, read range reduction and data transfer mode.

2 Features and benefits

2.1 Key features

- UHF RFID Gen2 tag chip according EPCglobal v1.2.0 with 128 bit EPC memory
- Memory read protection
- Integrated Product Status Flag (PSF)
- Tag tamper alarm
- RF field detection
- Digital switch
- Data transfer mode
- Real Read Range Reduction (Privacy Mode)
- External supply mode where both the READ & WRITE range are boosted to -27dBm

2.1.1 Memory

- 128-bit of EPC memory
- 64-bit Tag IDentifier (TID) including 32-bit factory locked unique serial number
- 32-bit kill password to permanently disable the tag
- 32-bit access password to allow a transition into the secured state
- Data retention: 20 years
- Broad international operating frequency: from 840 MHz to 960 MHz
- Long read/write ranges due to extremely low power design
- Reliable operation of multiple tags due to advanced anti-collision
- READ protection
- WRITE Lock
- Wide specified temperature range: -40 °C up to +85 °C

2.2 Key benefits

2.2.1 End user benefit

- Prevention of unauthorized memory access through read protection
- Indication of tag tampering attempt by use of the tag tamper alarm feature
- Electronic device configuration and / or activation by the use of the digital switch / data transfer mode
- Theft deterrence supported by the PSF feature (PSF alarm or EPC code)
- Small label sizes, long read ranges due to high chip sensitivity
- Product identification through unalterable extended TID range, including a 32-bit serial number
- Reliable operation in dense reader and noisy environments through high interference suppression

2.2.2 Antenna design benefits

- High sensitivity enables small and cost efficient antenna designs
- Low Q-Value eases broad band antenna design for global usage

All information provided in this document is subject to legal disclaimers.

© NXP B.V. 2019. All rights reserved.

2.2.3 Label manufacturer benefit

- Consistent performance on different materials due to low Q-factor
- Ease of assembly and high assembly yields through large chip input capacitance
- Fast first WRITE of the EPC memory for fast label initialization

2.3 Custom commands

- PSF Alarm
  Built-in PSF (Product Status Flag), enables the UHF RFID tag to be used as EAS tag (Electronic Article Surveillance) tag without the need for a back-end data base.
- Read Protect
  Protects all memory content including CRC16 from unauthorized reading.
- ChangeConfig
  Configures the additional features of the chip like external supply mode, tamper alarm, digital switch, read range reduction or data transfer.

The UCODE G2iL is equipped with a number of additional features and custom commands. Nevertheless, the chip is designed in a way standard EPCglobal READ/WRITE/ACCESS commands can be used to operate the features. No custom commands are needed to take advantage of all the features in case of unlocked EPC memory.

All information provided in this document is subject to legal disclaimers.

© NXP B.V. 2019. All rights reserved.

3 Applications

3.1 Markets

- Fashion (Apparel and footwear)
- Retail
- Electronics
- Fast Moving Consumer Goods
- Asset management
- Electronic Vehicle Identification

3.2 Applications

- Supply chain management
  - Item level tagging
  - Pallet and case tracking
- Container identification
- Product authentication
- PCB tagging
- Cost efficient, low level seals
- Wireless firmware download
- Wireless product activation

Outside above mentioned applications, please contact NXP Semiconductors for support.

All information provided in this document is subject to legal disclaimers.

© NXP B.V. 2019. All rights reserved.

4 Ordering information

Table 1. Ordering information

Type number	Package			
	Name	IC type	Description	Version
SL3S1203FUF	Wafer	G2iL	bumped die on sawn 8" 75 µm wafer	not applicable
SL3S1213FUF	Wafer	G2iL+	bumped die on sawn 8" 75 µm wafer	not applicable
SL3S1203FUD/BG	Wafer	G2iL	bumped die on sawn 8" 120 µm wafer, 7 µm Polyimide spacer	not applicable
SL3S1213FUD/BG	Wafer	G2iL+	bumped die on sawn 8" 120 µm wafer, 7 µm Polyimide spacer	not applicable
SL3S1203FTB0	XSON6	G2iL	plastic extremely thin small outline package; no leads; 6 terminals; body 1 × 1.45 × 0.5 mm	SOT886F1

All information provided in this document is subject to legal disclaimers.

© NXP B.V. 2019. All rights reserved.

5 Marking

Table 2. Marking codes

Type number	Marking code	Comment	Version
SL3S1203FTB0	UN	UCODE G2iL	SOT886

All information provided in this document is subject to legal disclaimers.

© NXP B.V. 2019. All rights reserved.

6 Block diagram

The SL3S12x3 IC consists of three major blocks:

- Analog Interface

- Digital Control

- EEPROM

The analog part provides stable supply voltage and demodulates data received from the reader for being processed by the digital part. Further, the modulation transistor of the analog part transmits data back to the reader.

The digital section includes the state machines, processes the protocol and handles communication with the EEPROM, which contains the EPC and the user data.

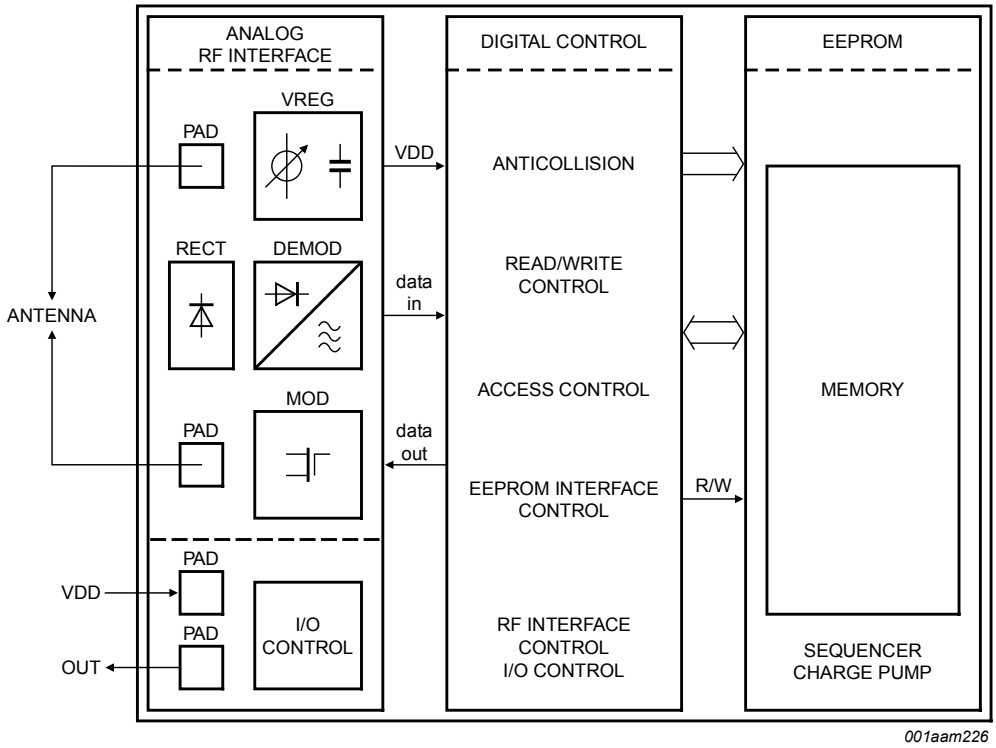

Figure 1. Block diagram of G2iL IC

All information provided in this document is subject to legal disclaimers.

© NXP B.V. 2019. All rights reserved.

7 Pinning information

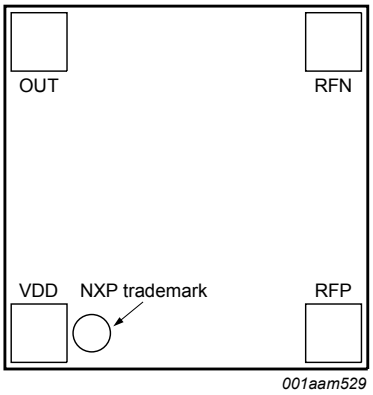

Figure 2. Pinning bare die

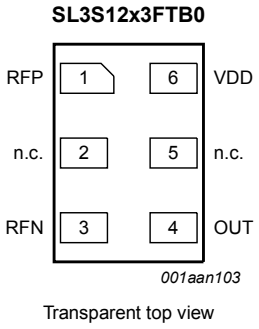

Figure 3. Pin configuration for SOT886

7.1 Pin description

Table 3. Pin description bare die

Symbol	Description
OUT	output pin
RFN	grounded antenna connector
VDD	external supply
RFP	ungrounded antenna connector

Table 4. Pin description SOT886

Pin	Symbol	Description
1	RFP	ungrounded antenna connector
2	n.c.	not connected
3	RFN	grounded antenna connector
4	OUT	output pin
5	n.c.	not connected
6	VDD	external supply

All information provided in this document is subject to legal disclaimers.

© NXP B.V. 2019. All rights reserved.

8 Wafer layout

8.1 Wafer layout

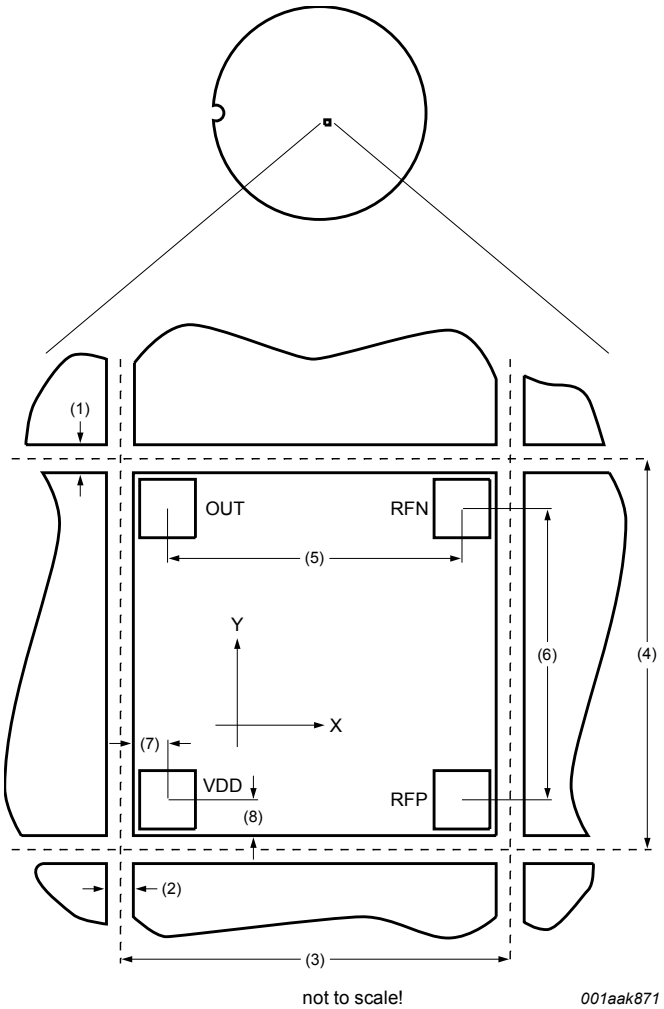

1. Die to Die distance (metal sealring - metal sealring) 21,4 µm, (X-scribe line width: 15 µm)
2. Die to Die distance (metal sealring - metal sealring) 21,4 µm, (Y-scribe line width: 15 µm)
3. Chip step, x-length: 485 µm
4. Chip step, y-length: 435 µm
5. Bump to bump distance X (OUT - RFN): 383 µm
6. Bump to bump distance Y (RFN - RFP): 333 µm
7. Distance bump to metal sealring X: 40,3 µm (outer edge - top metal)
8. Distance bump to metal sealring Y: 40,3 µm

Bump size X x Y: 60 µm x 60 µm

Remark: OUT and VDD are used with G2iL+ only

Figure 4. G2iL wafer layout

All information provided in this document is subject to legal disclaimers.

© NXP B.V. 2019. All rights reserved.

9 Mechanical specification

The UCODE G2iL/G2iL+ wafers are available in 75 µm and 120 µm thickness. The 75 µm thick wafer allows ultra thin label design but require a proper tuning of the glue dispenser during production. Because of the more robust structure of the 120 µm wafer, the wafer is ideal for harsh applications. The 120 µm thick wafer is also enhanced with 7µm Polyimide spacer allowing additional protection of the active circuit.

9.1 Wafer specification

See [2].

9.1.1 Wafer

Table 5. Specifications

Wafer	
Designation	each wafer is scribed with batch number and wafer number
Diameter	200 mm (8")
Thickness	
SL3S12x3FUF	75 µm ± 15 µm
SL3S12x3FUD	120 µm ± 15 µm
Number of pads	4
Pad location	non diagonal/ placed in chip corners
Distance pad to pad RFN-RFP	333.0 µm
Distance pad to pad OUT-RFN	383.0 µm
Process	CMOS 0.14 µm
Batch size	25 wafers
Potential good dies per wafer	139.351
Wafer backside	
Material	Si
Treatment	ground and stress release
Roughness	R_a max. 0.5 µm, R_t max. 5 µm
Chip dimensions	
Die size including scribe	0.485 mm × 0.435 mm = 0.211 mm^2
Scribe line width:	x-dimension = 15 µm
	y-dimension = 15 µm
Passivation on front	
Type	Sandwich structure
Material	PE-Nitride (on top)
Thickness	1.75 µm total thickness of passivation
Polyimide spacer	7 µm ± 1 µm (SL3S12x3FUD only)

All information provided in this document is subject to legal disclaimers.

© NXP B.V. 2019. All rights reserved.

Au bump	
Bump material	> 99.9 % pure Au
Bump hardness	35 – 80 HV 0.005
Bump shear strength	> 70 MPa
Bump height	
SL3S12x3FUF	18 µm
SL3S12x3FUD	25 µm[1]
Bump height uniformity	
within a die	± 2 µm
– within a wafer	± 3 µm
– wafer to wafer	± 4 µm
Bump flatness	± 1.5 µm
Bump size	
– RFP, RFN	60 × 60 µm
– OUT, VDD	60 × 60 µm
Bump size variation	± 5 µm

[1] Because of the 7 µm spacer, the bump will measure 18 µm relative height protruding the spacer.

9.1.2 Fail die identification

No inkdots are applied to the wafer.

Electronic wafer mapping (SECS II format) covers the electrical test results and additionally the results of mechanical/visual inspection.

See [2]

9.1.3 Map file distribution

See [2]

All information provided in this document is subject to legal disclaimers.

© NXP B.V. 2019. All rights reserved.

10 Functional description

10.1 Air interface standards

The UCODE G2iL fully supports all parts of the "Specification for RFID Air Interface EPCglobal, EPC Radio-Frequency Identity Protocols, Class-1 Generation-2 UHF RFID, Protocol for Communications at 860 MHz to 960 MHz, Version 1.2.0".

10.2 Power transfer

The interrogator provides an RF field that powers the tag, equipped with a UCODE G2iL. The antenna transforms the impedance of free space to the chip input impedance in order to get the maximum possible power for the G2iL on the tag. The G2iL+ can also be supplied externally.

The RF field, which is oscillating on the operating frequency provided by the interrogator, is rectified to provide a smoothed DC voltage to the analog and digital modules of the IC.

The antenna that is attached to the chip may use a DC connection between the two antenna pads. Therefore the G2iL also enables loop antenna design. Possible examples of supported antenna structures can be found in the reference antenna design guide.

10.3 Data transfer

10.3.1 Reader to tag Link

An interrogator transmits information to the UCODE G2iL by modulating an UHF RF signal. The G2iL receives both information and operating energy from this RF signal. Tags are passive, meaning that they receive all of their operating energy from the interrogator's RF waveform. In order to further improve the read range the UCODE G2iL+ can be externally supplied as well so the energy to operate the chip does not need to be transmitted by the reader.

An interrogator is using a fixed modulation and data rate for the duration of at least one inventory round. It communicates to the G2iL by modulating an RF carrier using DSB-ASK with PIE encoding.

For further details refer to Section 16, [1]. Interrogator-to-tag (R=>T) communications.

10.3.2 Tag to reader Link

An interrogator receives information from a G2iL by transmitting an unmodulated RF carrier and listening for a backscattered reply. The G2iL backscatters by switching the reflection coefficient of its antenna between two states in accordance with the data being sent. For further details refer to Section 16, [1], chapter 6.3.1.3.

The UCODE G2iL communicates information by backscatter-modulating the amplitude and/or phase of the RF carrier. Interrogators shall be capable of demodulating either demodulation type.

The encoding format, selected in response to interrogator commands, is either FM0 baseband or Miller-modulated subcarrier.

All information provided in this document is subject to legal disclaimers.

© NXP B.V. 2019. All rights reserved.

10.4 G2iL and G2iL+ differences

The UCODE G2iL is tailored for application where mainly EPC or TID number space is needed. The G2iL+ in addition provides functionality such as tag tamper alarm, external supply operation to further boost read/write range (external supply mode), a Privacy mode reducing the read range or I/O functionality (data transfer to externally connected devices) required.

The following table provides an overview of G2iL, G2iL+ special features.

Table 6. Overview of G2iL and G2iL+ features

Features	G2iL	G2iL+
Read protection (bankwise)	yes	yes
PSF (Built-in Product Status Flag)	yes	yes
Backscatter strength reduction	yes	yes
Real read range reduction	yes	yes
Digital switch / Digital input	-	yes
External supply mode	-	yes
RF field detection	-	yes
Data transfer	-	yes
Tag tamper alarm	-	yes

10.5 Supported commands

The G2iL supports all **mandatory** EPCglobal V1.2.0 commands.

In addition the G2iL supports the following **optional** commands:

- ACCESS
- Block Write (32 bit)

The G2iL features the following **custom** commands described more in detail later:

- ResetReadProtect (backward compatible to G2X)
- ReadProtect (backward compatible to G2X)
- ChangeEAS (backward compatible to G2X)
- EAS_Alarm (backward compatible to G2X)
- ChangeConfig (new with G2iL)

10.6 G2iL, G2iL+ memory

The G2iL, G2iL+ memory is implemented according EPCglobal Class1Gen2 and organized in three sections:

Table 7. G2iL memory sections

Name	Size	Bank
Reserved memory (32 bit ACCESS and 32 bit KILL password)	64 bit	00b
EPC (excluding 16 bit CRC-16 and 16 bit PC)	128 bit	01b
G2iL Configuration Word	16 bit	01b

All information provided in this document is subject to legal disclaimers.

© NXP B.V. 2019. All rights reserved.

Name	Size	Bank
TID (including permalocked unique 32 bit serial number)	64 bit	10b

The logical address of all memory banks begin at zero (00h).

In addition to the three memory banks one configuration word to handle the G2iL specific features is available at EPC bank 01 address 200h. The configuration word is described in detail in Section 10.7.1.

Memory pages (16 bit words) pre-programmed to zero will not execute an erase cycle before writing data to it. This approach accelerates initialization of the chip and enables faster programming of the memory.

10.6.1 G2iL, G2iL+ overall memory map

Table 8. G2iL, G2iL+ overall memory map

Bank address	Memory address	Type	Content	Initial	Remark
Bank 00	00h to 1Fh	reserved	kill password	all 00h	unlocked memory
	20h to 3Fh	reserved	access password	all 00h	unlocked memory
Bank 01 EPC	00h to 0Fh	EPC	CRC-16: refer to [1]		memory mapped calculated CRC
	10h to 14h	EPC	backscatter length	00110b	unlocked memory
	15h	EPC	UMI	0b	unlocked memory
	16h	EPC	XPC indicator	0b	hardwired to 0
	17h to 1Fh	EPC	numbering system indicator	00h	unlocked memory
	20h to 9Fh	EPC	EPC	[1]	unlocked memory
Bank 01 Config Word	200h	EPC	tamper alarm flag	0b[2]	indicator bit
	201h	EPC	external supply flag or input signal	0b[2]	indicator bit
	202h	EPC	RFU	0b[2]	locked memory
	203h	EPC	RFU	0b[2]	locked memory
	204h	EPC	invert digital output:	0b[2]	temporary bit
	205h	EPC	transparent mode on/off	0b[2]	temporary bit
	206h	EPC	transparent mode data/raw	0b[2]	temporary bit
	207h	EPC	RFU	0b[2]	locked memory
	208h	EPC	RFU	0b[2]	locked memory
	209h	EPC	max. backscatter strength	1b[2]	unlocked memory
	20Ah	EPC	digital output	0b[2]	unlocked memory
	20Bh	EPC	read range reduction on/off	0b[2]	unlocked memory
	20Ch	EPC	RFU	0b[2]	locked memory
	20Dh	EPC	read protect EPC Bank	0b[2]	unlocked memory
	20Eh	EPC	read protect TID	0b[2]	unlocked memory
	20Fh	EPC	PSF alarm flag	0b[2]	unlocked memory

All information provided in this document is subject to legal disclaimers.

© NXP B.V. 2019. All rights reserved.

Bank address	Memory address	Type	Content	Initial	Remark
Bank 10 TID	00h to 07h	TID	allocation class identifier	1110 0010b	locked memory
	08h to 13h	TID	tag mask designer identifier	0000 0000 0110b	locked memory
	14h	TID	config word indicator	1b[3]	locked memory
	14h to 1Fh	TID	tag model number	TMNR[1]	locked memory
	20h to 3Fh	TID	serial number	SNR	locked memory

[1] See Figure 5
[2] See also Table 12 for further details.
[3] Indicates the existence of a Configuration Word at the end of the EPC number

All information provided in this document is subject to legal disclaimers.

© NXP B.V. 2019. All rights reserved.

10.6.2 G2iL TID memory details

	First 32 bit of TID memory	Class ID	Mask Designer ID	Model Number		
				Config Word Indicator	Sub Version Nr.	Version (Silicon) Nr.
Ucode G2iL	E2006806	E2h	006h	1	0000b	0000110b
	E2006906	E2h	006h	1	0010b	0000110b
	E2006B06	E2h	006h	1	0110b	0000110b
Ucode G2iL+	E2006807	E2h	006h	1	0000b	0000111b
	E2006907	E2h	006h	1	0010b	0000111b
	E2006B07	E2h	006h	1	0110b	0000111b

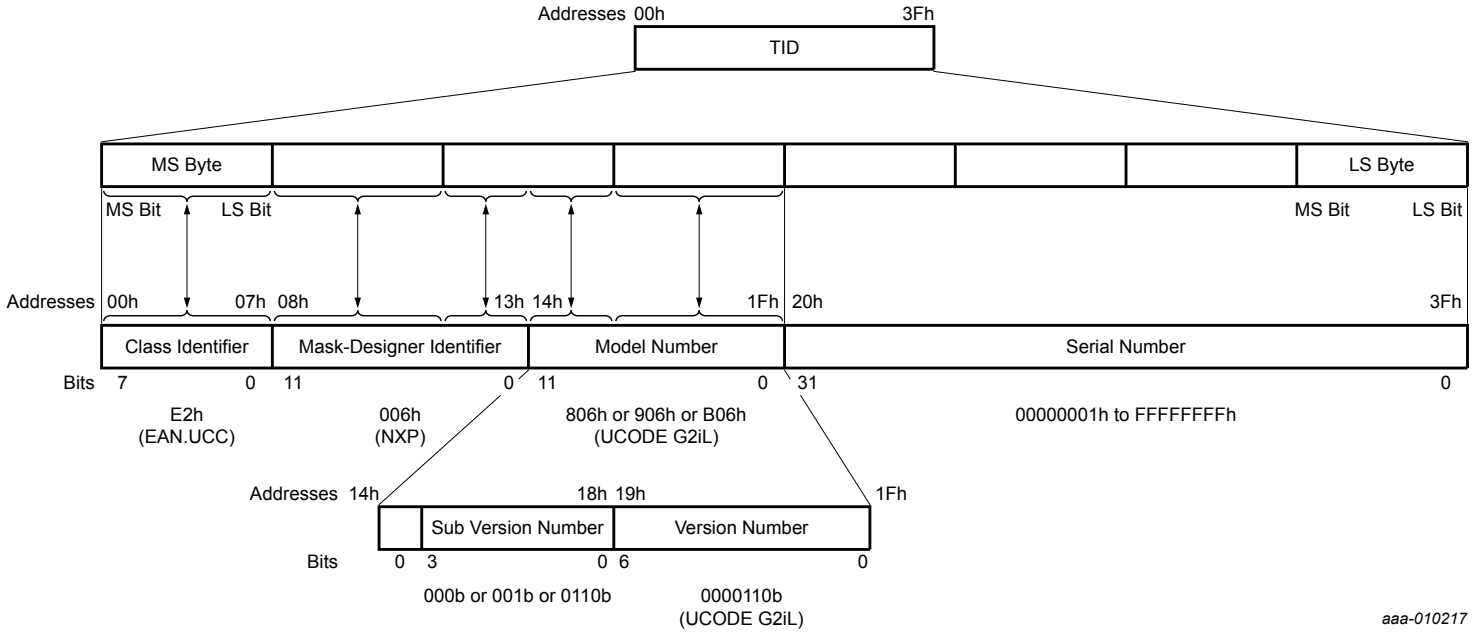

Figure 5. G2iL TID memory structure

All information provided in this document is subject to legal disclaimers.

© NXP B.V. 2019. All rights reserved.

10.7 Custom commands

The UCODE G2iL, G2iL+ is equipped with a number of additional features and custom commands.

Nevertheless, the chip is designed in a way standard EPCglobal READ/WRITE/ACCESS

commands can be used to operate the features.

The memory map stated in the previous section describes the Configuration Word used to control the additional features located at address 200h of the EPC memory. For this reason the standard READ/WRITE commands of an UHF EPCglobal compliant reader can be used to select the flags or activate/deactivate features.

The features can only be activated/deactivated (written) using standard EPC WRITE command as long the EPC is not locked. In case the EPC is locked either the bank needs to be unlocked to apply changes or the ChangeConfig custom command is used to change the settings.

The UCODE G2iL is also equipped with the complete UCODE G2X command set for backward compatibility reasons. Nevertheless, the one ChangeConfig command of the G2iL can be used instead of the entire G2X command set.

Bit 14h of the TID indicates the existence of a Configuration Word. This flag will enable selecting Config-Word enhanced transponders in mixed tag populations.

10.7.1 ChangeConfig

Although G2iL is tailored for supply chain management, item level tagging and product authentication the G2iL+ version enables active interaction with products. Among the password protected features are the capability of download firmware to electronics, activate/deactivate electronics which can also be used as theft deterrence, a dedicated privacy mode by reducing the read range, integrated PSF (Product Status Flag) or Tag Tamper Alarm.

The G2iL ChangeConfig custom command allows handling the special NXP Semiconductors features described in the following paragraph. Please also see the memory map in Section 10.6 and "Section 10.7.2**.** If the EPC memory is not write locked the standard EPC READ/WRITE command can be used to change the settings.

G2iL, G2iL+ special features [1]

UCODE G2iL and G2iL+ common special features are:

- **Bank wise read protection** (separate for EPC and TID)
  EPC bank and the serial number part of the TID can be read protected independently. When protected reading of the particular memory will return '0'. The flags of the configuration word can be selected using the standard SELECT[2] command. Only read protected parts will then participate an inventory round. The G2X ReadProtect command will set both EPC and TID read protect flags.
- **Integrated PSF (Product Status Flag)**

1 **The features can only be manipulated (enabled/disabled) with unlocked EPC bank, otherwise the ChangeConfig command can be used.**

2 SELECT has to be applied onto the Configuration Word with pointer address 200h. Selecting bits within the Configuration Word using a pointer address not equal to 200h is not possible.

All information provided in this document is subject to legal disclaimers.

© NXP B.V. 2019. All rights reserved.

The PSF is a general purpose flag that can be used as an EAS (Electronic Article Surveillance) flag, quality checked flag or similar.
The G2iL offers two ways of detecting an activated PSF. In cases extremely fast detection is needed the EAS_Alarm command can be used. The UCODE G2iL will reply a 64-bit alarm code like described in section EAS_Alarm upon sending the command. As a second option the EPC SELECT[2] command selecting the PSF flag of the configuration word can be used. In the following inventory round only PSF enabled chips will reply their EPC number.

- **Backscatter strength reduction**
  The UCODE G2iL features two levels of backscatter strengths. Per default maximum backscatter is enabled in order to enable maximum read rates. When clearing the flag the strength can be reduced if needed.
- **Real Read Range Reduction 4R**
  Some applications require the reduction of the read range to close proximity for privacy reasons. Setting the 4R flag will significantly reduce the chip sensitivity to +12 dBm. The +12 dBm have to be available at chip start up (slow increase of field strength is not applicable). For additional privacy, the read protection can be activated in the same configuration step. The related flag of the configuration word can be selected using the standard SELECT[2] command so only chips with reduced read range will be part of an inventory.
  Remark: The attenuation will result in only a few centimeter of read range at 36 dBm EIRP!

UCODE G2iL+ specific special features are:[1]

- **Tag Tamper Alarm (G2iL+ only)**
  The UCODE G2iL+ Tamper Alarm will flag the status of the VDD to OUT pad connection which can be designed as an predetermined breaking point (see Figure 6).

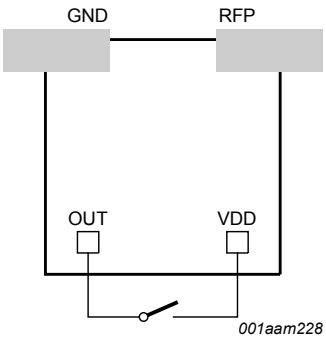

Figure 6. Schematic of connecting VDD and OUT pad with a predetermined breaking point to turn a standard RFID label into a wireless safety seal

The status of the pad connection (open/closed) can be read in the configuration register and/or selected using the EPC SELECT[2] This feature will enable designing a wireless RFID safety seal. When breaking the connection by peeling off the label or manipulating a lock an alarm can be triggered.

- **RF field detection (G2iL+ only)**
  The UCODE G2iL+ VDD pin can be also used as a RF field detector. Upon bringing the tag within an RF field, a pulse signal will be immediately sent from the VDD test pad. (for details see [3]).
- **Digital Switch (G2iL+ only)**

All information provided in this document is subject to legal disclaimers.

© NXP B.V. 2019. All rights reserved.

The UCODE G2iL+ OUT pin can be used as digital switch. The state of the output pad can be switched to VDD or GND depending on the Digital OUT bit of the Configuration Word register. The state of the output is persistent in the memory even after KILL or switching off the supply. This feature will allow activating/deactivating externally connected peripherals or can be used as theft deterrence of electronics.
The state of the OUT pin can also be changed temporary by toggling the 'Invert Digital Output' bit.

- **Data transfer Mode (G2iL+ only)**
  In applications where not switching the output like described in "Digital Switch" but external device communication is needed the G2iL+ Data Transfer Mode can be used by setting the according bit of the Configuration Word register. When activated the air interface communication will be directly transferred to the OUT pad of the chip.
  Two modes of data transfer are available and can be switched using the Transparent Mode DATA/RAW bit.
  The default Transparent Mode DATA will remove the Frame Sync of the communication and toggle the output with every raising edge in the RF field. This will allow implementing a Manchester type of data transmission.
  The Transparent Mode RAW will switch the demodulated air interface communication to the OUT pad.
- **External Supply Indicator - Digital Input (G2iL+ only)**
  The VDD pad of the UCODE G2iL+ can be used as a single bit digital input pin.
  The state of the pad is directly associated with the External Supply Indicator bit of the configuration register. Simple one bit return signaling (chip to reader) can be implemented by polling this Configuration Word register flag. RF reset is necessary for proper polling.
- **External Supply Mode (G2iL+ only)**
  The UCODE G2iL+ can be supplied externally by connecting 1.85 V (Iout = 0μA) supply. When externally supplied less energy from the RF field is needed to operate the chip. This will not just enable further improved sensitivity and read ranges (up to -27 dBm) but also enable a write range that is equal to the read range.
  The figure schematically shows the supply connected to the UCODE G2iL+.

Remark: When permanently externally supplied there will not be a power-on-reset. This will result in the following limitations:

- When externally supplied session flag S0 will keep it’s state during RF-OFF phase.
- When externally supplied session flag S2, S3, SL will have infinite persistence time and will behave similar to S0.
- Session flag S1 will behave regular like in pure passive operation.

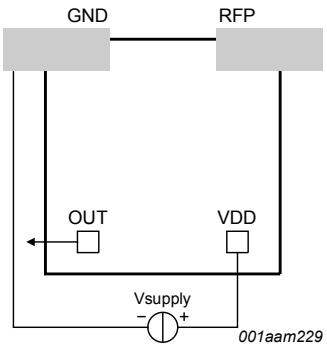

Figure 7. Schematic of external power supply

All information provided in this document is subject to legal disclaimers.

© NXP B.V. 2019. All rights reserved.

Table 9. ChangeConfig custom command

	Command	RFU	Data	RN	CRC-16
No. of bits	16	8	16	16	16
Description	11100000 00000111	00000000	Toggle bits XOR RN 16	handle	-

The bits to be toggled in the configuration register need to be set to '1'.

E.g. sending 0000 0000 0001 0001 XOR RN16 will activate the 4R and PSF. Sending the very same command a second time will disable the features again.

The reply of the ChangeConfig will return the current register setting.

Table 10. ChangeConfig custom command reply

	Header	Status bits	RN	CRC-16
No. of bits	1	16	16	16
Description	0	Config-Word	Handle	-

Table 11. ChangeConfig command-response table

Starting state	Condition	Response	Next state
ready	all	-	ready
arbitrate, reply, acknowledged	all	-	arbitrate
open	valid handle Status word needs to change	Backscatter unchanged Config-WordConfig-Word immediately	open
	valid handle Status word does not need to change	Backscatter Config-Word immediately	open
secured	valid handle Status word needs to change	Backscatter modified Config-Word, when done	secured
	valid handle Status word does not need to change	Backscatter Config-Word immediately	secured
killed	all	-	killed

The features can only be activated/deactivated using standard EPC WRITE if the EPC bank is unlocked. The permanent and temporary bits of the Configuration Word can be toggled without the need for an ACCESS password in case the ACCESS password is set to zero. In case the EPC bank is locked the lock needs to be removed before applying changes or the ChangeConfig command has to be used.

All information provided in this document is subject to legal disclaimers.

© NXP B.V. 2019. All rights reserved.

10.7.2 G2iL, G2iL+ special features control mechanism

Special features of the G2iL are managed using a configuration word (Config-Word) located at address 200h in the EPC memory bank.

The entire Config-Word is selectable (using the standard EPC SELECT[3] command) and can be read using standard EPC READ command and modified using the standard EPC WRITE or ChangeConfig custom command in case the EPC memory is locked for writing.

ChangeConfig can be executed from the OPEN and SECURED state.

The chip will take all "Toggle Bits" for ’0’ if the chip is in the OPEN state or the ACCESS password is zero; therefore it will not alter any status bits, but report the current status only. The command will be ignored with an invalid CRC-16 or an invalid handle. The chip will then remain in the current state. The CRC-16 is calculated from the first command-code bit to the last handle bit.

A ChangeConfig command without frame-sync and proceeding Req_RN will be ignored. The command will also be ignored if any of the RFU bits are toggled.

In order to change the configuration, to activate/deactivate a feature a ’1’ has to be written to the corresponding register flag to toggle the status. E.g. sending 0x0002 to the register will activate the read protection of the TID. Sending the same command a second time will again clear the read protection of the TID. Invalid toggling on indicator or RFU bits are ignored.

Executing the command with zero as payload or in the OPEN state will return the current register settings. The chip will reply to a successful ChangeConfig with an extended preamble regardless of the TRext value of the Query command.

After sending a ChangeConfig an interrogator shall transmit CW for less than T_{Reply} or 20 ms, where T_{Reply} is the time between the interrogator's ChangeConfig command and the chip’s backscattered reply. An interrogator may observe three possible responses after sending a ChangeConfig, depending on the success or failure of the operation

- ChangeConfigChangeConfig succeeded: The chip will backscatter the reply shown above comprising a header (a 0-bit), the current Status Word setting, the handle, and a CRC-16 calculated over the 0-bit, the status word and the handle. If the interrogator observes this reply within 20 ms then the ChangeConfig completed successfully.
- The chip encounters an error: The chip will backscatter an error code during the CW period rather than the reply shown below (see EPCglobal Spec for error-code definitions and for the reply format).
- ChangeConfig does not succeed: If the interrogator does not observe a reply within 20 ms then the ChangeStatus did not complete successfully. The interrogator may issue a Req_RN command (containing the handle) to verify that the chip is still in the interrogator's field, and may reissue the ChangeConfig command.

The G2iL configuration word is located at address 200h of the EPC memory and is structured as following:

3 SELECT has to be applied onto the Configuration Word with pointer address 200h. Selecting bits within the Configuration Word using a pointer address not equal to 200h is not possible.

All information provided in this document is subject to legal disclaimers.

© NXP B.V. 2019. All rights reserved.

Table 12. Address 200h to 207h

Indicator bits				Temporary bits			
Tamper indicator	External supply indicator	RFU	RFU	Invert Output	Transparent mode on/off	Data mode data/raw	RFU
0	1	2	3	4	5	6	7

Table 13. Address 208h to 20Fh

Permanent bits							
RFU	max. backscatter strength	Digital output	Privacy mode	RFU	Protect EPC	Protect TID	PSF Alarm bit
8	9	10	11	12	13	14	15

The configuration word contains three different type of bits:

- **Indicator bits** cannot be changed by command:
  Tag Tamper Alarm Indicator
  External Supply Indicator (digital input)
- **Temporary bits** are reset at power up:
  Invert Output
  Transparent Mode on/off
  Data Mode data/raw
- **Permanent bits**: permanently stored bits in the memory
  Max. Backscatter Strength
  Digital Output
  Read Range Reduction
  Read Protect EPC
  Read Protect TID
  PSF Alarm

ReadProtect[4]

The G2iL ReadProtect custom command enables reliable read protection of the entire G2iL memory. Executing ReadProtect from the Secured state will set the ProtectEPC and ProtectTID bits of the Configuration Word to '1'. With the ReadProtect-Bit set the G2iL will continue to work unaffected but veil its protected content.

The read protection can be removed by executing Reset ReadProtect. The ReadProtect-Bits will than be cleared.

Devices whose access password is zero will ignore the command. A frame-sync must be pre-pended the command.

After sending the ReadProtect command an interrogator shall transmit CW for the lesser of T_{Reply} or 20 ms, where T_{Reply} is the time between the interrogator's ReadProtect command and the backscattered reply. An interrogator may observe three possible responses after sending a ReadProtect, depending on the success or failure of the operation:

- ReadProtect succeeds: After completing the ReadProtect the G2iL shall backscatter the reply shown in Table 15 comprising a header (a 0-bit), the tag's handle, and a

4 Note: The ChangeConfig command can be used instead of "ReadProtect", "ResetReadProtect", "ChangeEAS".

All information provided in this document is subject to legal disclaimers.

© NXP B.V. 2019. All rights reserved.

CRC-16 calculated over the 0-bit and handle. Immediately after this reply the G2iL will render itself to this ReadProtect mode. If the interrogator observes this reply within 20 ms then the ReadProtect completed successfully.

- The G2iL encounters an error: The G2iL will backscatter an error code during the CW period rather than the reply shown in the EPCglobal Spec (see Annex I for error-code definitions and for the reply format).
- ReadProtect does not succeed: If the interrogator does not observe a reply within 20 ms then the ReadProtect did not complete successfully. The interrogator may issue a Req_RN command (containing the handle) to verify that the G2iL is still in the interrogation zone, and may re-initiate the ReadProtect command.

The G2iL reply to the ReadProtect command will use the extended preamble shown in EPCglobal Spec (Figure 6.11 or Figure 6.15), as appropriate (i.e. a Tag shall reply as if TRext=1) regardless of the TRext value in the Query that initiated the round.

Table 14. ReadProtect command

	Command	RN	CRC-16
# of bits	16	16	16
description	11100000 00000001	handle	-

Table 15. G2iL reply to a successful ReadProtect procedure

	Header	RN	CRC-16
# of bits	1	16	16
description	0	handle	-

Table 16. ReadProtect command-response table

Starting State	Condition	Response	Next State
ready	all	–	ready
arbitrate, reply, acknowledged	all	–	arbitrate
open	all	-	open
secured	valid handle & invalid access password	–	arbitrate
	valid handle & valid non zero access password	Backscatter handle, when done	secured
	invalid handle	–	secured
killed	all	–	killed

10.7.3 Reset ReadProtect[3]

Reset ReadProtect allows an interrogator to clear the ProtectEPC and ProtectTID bits of the Configuration Word. This will re-enable reading of the related G2iL memory content.

For details on the command response please refer to Table 17.

All information provided in this document is subject to legal disclaimers.

© NXP B.V. 2019. All rights reserved.

After sending a Reset ReadProtect an interrogator shall transmit CW for the lesser of T_{Reply} or 20 ms, where T_{Reply} is the time between the interrogator's Reset ReadProtect command and the G2iL backscattered reply. A Req_RN command prior to the Reset ReadProtect is necessary to successfully execute the command. A frame-sync must be pre-pended the command.

An interrogator may observe three possible responses after sending a Reset ReadProtect, depending on the success or failure of the operation:

- Reset ReadProtect succeeds: After completing the Reset ReadProtect a G2iL will backscatter the reply shown in Table 18 comprising a header (a 0-bit), the handle, and a CRC-16 calculated over the 0-bit and handle. If the interrogator observes this reply within 20 ms then the Reset ReadProtect completed successfully.
- The G2iL encounters an error: The G2iL will backscatter an error code during the CW period rather than the reply shown in Table 18 (see EPCglobal Spec for error-code definitions and for the reply format).
- Reset ReadProtect does not succeed: If the interrogator does not observe a reply within 20 ms then the Reset ReadProtect did not complete successfully. The interrogator may issue a Req_RN command (containing the handle) to verify that the G2iL is still in the interrogation zone, and may reissue the Reset ReadProtect command.

The G2iL reply to the Reset ReadProtect command will use the extended preamble shown in EPCglobal Spec (Figure 6.11 or Figure 6.15), as appropriate (i.e. a G2iL will reply as if TRext=1 regardless of the TRext value in the Query that initiated the round.

The Reset ReadProtect command is structured as following:

- 16 bit command
- Password: 32 bit Access-Password XOR with 2 times current RN16
  Remark: To generate the 32 bit password the 16 bit RN16 is duplicated and used two times to generate the 32 bit (e.g. a RN16 of 1234 will result in 1234 1234).
- 16 bit handle
- CRC-16 calculate over the first command-code bit to the last handle bit

Table 17. Reset ReadProtect command

	Command	Password	RN	CRC-16
# of bits	16	32	16	16
description	11100000 00000010	(access password) ⊗ 2*RN16	handle	-

Table 18. G2iL reply to a successful Reset ReadProtect command

	Header	RN	CRC-16
# of bits	1	16	16
description	0	handle	-

All information provided in this document is subject to legal disclaimers.

© NXP B.V. 2019. All rights reserved.

Table 19. Reset ReadProtect command-response table

Starting State	Condition	Response	Next State
ready	all	–	ready
arbitrate, reply, acknowledged	all	–	arbitrate
open	valid handle & valid access password	Backscatter handle, when done	open
	valid handle & invalid access password	–	arbitrate
	invalid handle	–	open
secured	valid handle & valid access password	Backscatter handle, when done	secured
	valid handle & invalid access password	–	arbitrate
	invalid handle	–	secured
killed	all	–	killed

10.7.4 ChangeEAS[3]

UCODE G2iL equipped RFID tags will also feature a stand-alone operating EAS alarm mechanism for fast and offline electronic article surveillance. The PSF bit of the Configuration Word directly relates to the EAS Alarm feature. With an PSF bit set to '1' the tag will reply to an EAS_Alarm command by backscattering a 64 bit alarm code without the need of a Select or Query. The EAS is a built-in solution so no connection to a backend database is required. In case the EAS_Alarm command is not implemented in the reader a standard EPC SELCET to the Configuration Word and Query can be used. When using standard SELECT/QUERY the EPC will be returned during inventory.

ChangeEAS can be executed from the Secured state only. The command will be ignored if the Access Password is zero, the command will also be ignored with an invalid CRC-16 or an invalid handle, the G2iL will than remain in the current state. The CRC-16 is calculated from the first command-code bit to the last handle bit. A frame-sync must be pre-pended the command.

The G2iL reply to a successful ChangeEAS will use the extended preamble, as appropriate (i.e. a Tag shall reply as if TRext=1) regardless of the TRext value in the Query that initiated the round.

After sending a ChangeEAS an interrogator shall transmit CW for less than T_{Reply} or 20 ms, where T_{Reply} is the time between the interrogator's ChangeEAS command and the G2iL backscattered reply. An interrogator may observe three possible responses after sending a ChangeEAS, depending on the success or failure of the operation

- ChangeEAS succeeds: After completing the ChangeEAS a G2iL will backscatter the reply shown in Table 21 comprising a header (a 0-bit), the handle, and a CRC-16 calculated over the 0-bit and handle. If the interrogator observes this reply within 20 ms then the ChangeEAS completed successfully.
- The G2iL encounters an error: The G2iL will backscatter an error code during the CW period rather than the reply shown in Table 21 (see EPCglobal Spec for error-code definitions and for the reply format).
- ChangeEAS does not succeed: If the interrogator does not observe a reply within 20 ms then the ChangeEAS did not complete successfully. The interrogator may

All information provided in this document is subject to legal disclaimers.

© NXP B.V. 2019. All rights reserved.

issue a Req_RN command (containing the handle) to verify that the G2iL is still in the interrogator's field, and may reissue the ChangeEAS command.

Upon receiving a valid ChangeEAS command a G2iL will perform the commanded set/reset operation of the PSF bit of the Configuration Word.

If PSF bit is set, the EAS_Alarm command will be available after the next power up and reply the 64 bit EAS code upon execution. Otherwise the EAS_Alarm command will be ignored.

Table 20. ChangeEAS command

	Command	ChangeEAS	RN	CRC-16
# of bits	16	1	16	16
description	11100000 00000011	1 ... set PSF bit 0 ... reset PSF bit	handle	

Table 21. G2iL reply to a successful ChangeEAS command

	Header	RN	CRC-16
# of bits	1	16	16
description	0	handle	-

Table 22. ChangeEAS command-response table

Starting State	Condition	Response	Next state
ready	all	–	ready
arbitrate, reply, acknowledged	all	–	arbitrate
open	all	–	open
secured	valid handle	backscatter handle, when done	secured
	invalid handle	–	secured
killed	all	–	killed

10.7.5 EAS_Alarm

Upon receiving an EAS_Alarm custom command the UCODE G2iL will immediately backscatter an EAS-Alarmcode in case the PSF bit of the Configuration Word is set. The alarm code is returned without any delay caused by Select, Query and without the need for a backend database.

The EAS feature of the G2iL is available after enabling it by sending a ChangeEAS command described in Section 10.7.4 or after setting the PSF bit of the Configuration Word to ’1’. With the EAS-Alarm enabled the G2iL will reply to an EAS_Alarm command by backscattering a fixed 64 bit alarm code. A G2iL will reply to an EAS_Alarm command from the ready state only. As an alternative to the fast EAS_Alarm command a standard SELECT [2] (upon the Configuration Word) and QUERY can be used.

All information provided in this document is subject to legal disclaimers.

© NXP B.V. 2019. All rights reserved.

If the PSF bit is reset to '0' by sending a ChangeEAS command in the password protected Secure state or clearing the PSF bit the G2iL will not reply to an EAS_Alarm command.

The EAS_Alarm command is structured as following:

- 16 bit command
- 16 bit inverted command
- DR (TRcal divide ratio) sets the T=>R link frequency as described in EPCglobal Spec. 6.3.1.2.8 and Table 6.9.
- M (cycles per symbol) sets the T=>R data rate and modulation format as shown in EPCglobal Spec. Table 6.10.
- TRext chooses whether the T=>R preamble is pre-pended with a pilot tone as described in EPCglobal Spec. 6.3.1.3.

A preamble must be pre-pended the EAS_Alarm command according EPCglobal Spec, 6.3.1.2.8.

Upon receiving an EAS_Alarm command the tag loads the CRC5 register with 01001b and backscatters the 64 bit alarm code accordingly. The reader is now able to calculate the CRC5 over the backscattered 64 bits received to verify the received code.

Table 23. EAS_Alarm command

	Command	Inv_Command	DR	M	TRext	CRC-16
# of bits	16	16	1	2	1	16
description	11100000 **0 0000100**	00011111 11111011	0: DR = 8 1: DR = 64/3	00: M = 1 01: M = 2 10: M = 4 11: M = 8	0: no pilot tone 1: use pilot tone	-

Table 24. G2iL reply to a successful EAS_Alarm command

	Header	EAS Code
# of bits	1	64
description	0	CRC5 (MSB)

Table 25. EAS_Alarm command-response table

Starting State	Condition	Response	Next state
ready	PSF bit is set PSF bit is cleared	backscatter alarm code --	ready
arbitrate, reply, acknowledged	all	–	arbitrate
open	all	–	open
secured	all	–	secured
killed	all	–	killed

All information provided in this document is subject to legal disclaimers.

© NXP B.V. 2019. All rights reserved.

11 Limiting values

Table 26. Limiting values[1][2]

In accordance with the Absolute Maximum Rating System (IEC 60134).
Voltages are referenced to RFN

Symbol	Parameter	Conditions		Min	Max	Unit
Bare die and SOT886 limitations						
T_{stg}	storage temperature			-55	+125	°C
T_{amb}	ambient temperature			-40	+85	°C
V_{ESD}	electrostatic discharge voltage	Human body model	[3] [4]	-	± 2	kV
Pad limitations						
V_i	input voltage	absolute limits, VDD-OUT pad		-0.5	+2.5	V
I_o	output current	absolute limits input/output current, VDD-OUT pad		-0.5	+0.5	mA
P_i	input power	maximum power dissipation, RFP pad		-	100	mW

[1] Stresses above those listed under Absolute Maximum Ratings may cause permanent damage to the device. This is a stress rating only and functional operation of the device at these or any conditions other than those described in the Operating Conditions and Electrical Characteristics section of this specification is not implied.
[2] This product includes circuitry specifically designed for the protection of its internal devices from the damaging effects of excessive static charge. Nonetheless, it is suggested that conventional precautions be taken to avoid applying greater than the rated maxima.
[3] ANSI/ESDA/JEDEC JS-001
[4] For ESD measurement, the die chip has been mounted into a CDIP20 package.

CAUTION

This device is sensitive to ElectroStatic Discharge (ESD). Observe precautions for handling electrostatic sensitive devices.
Such precautions are described in the *ANSI/ESD S20.20, IEC/ST 61340-5, JESD625-A* or equivalent standards.

All information provided in this document is subject to legal disclaimers.

© NXP B.V. 2019. All rights reserved.

12 Characteristics

12.1 UCODE G2iL, G2iL+ bare die characteristics

Table 27. G2iL, G2iL+ RF interface characteristics (RFN, RFP)

Symbol	Parameter	Conditions		Min	Typ	Max	Unit
f_i	input frequency			840	-	960	MHz
Normal mode - no external supply, read range reduction OFF							
$P_{i(min)}$	minimum input power	READ sensitivity	[1] [2] [3]	-	-18	-	dBm
$P_{i(min)}$	minimum input power	WRITE sensitivity, (write range/ read range - ratio)		-	30	-	%
C_i	input capacitance	parallel	[4]	-	0.77	-	pF
Q	quality factor	915 MHz	[4]	-	9.7	-	-
Z	impedance	866 MHz	[4]	-	25 -j237	-	Ω
		915 MHz	[4]	-	23 -j224	-	Ω
		953 MHz	[4]	-	21 -j216	-	Ω
External supply mode - VDD pad supplied, read range reduction OFF							
$P_{i(min)}$	minimum input power	Ext. supplied READ	[1] [2]	-	-27	-	dBm
		Ext. supplied WRITE	[2]	-	-27	-	dBm
Z	impedance	externally supplied, 915 MHz	[4]	-	7 -j230	-	Ω
Read range reduction ON - no external supply							
$P_{i(min)}$	minimum input power	4R on READ	[1] [2] [5]	-	+12	-	dBm
		4R on WRITE	[2] [5]	-	+12	-	dBm
Z	impedance	4R on, 915 MHz	[4]	-	18 -j2	-	Ω
Modulation resistance							
R	resistance	modulation resistance, max. backscatter = off	[6]	-	170	-	Ω
		modulation resistance, max. backscatter = on	[7]	-	55	-	Ω

[1] Power to process a Query command.
[2] Measured with a 50 Ω source impedance.
[3] Results in approx. -18.5 dBm tag sensitivity on a 2 dBi gain antenna.
[4] At minimum operating power.
[5] It has to be assured the reader (system) is capable of providing enough field strength to give +12 dBm at the chip otherwise communication with the chip will not be possible.
[6] Enables tag designs to be within ETSI limits for return link data rates of e.g. 320 kHz/M4.
[7] Will result in up to 10 dB higher tag backscatter power at high field strength.

All information provided in this document is subject to legal disclaimers.

© NXP B.V. 2019. All rights reserved.

Table 28. VDD pin characteristics

Symbol	Parameter	Conditions		Min	Typ	Max	Unit
Minimum supply voltage/current - without assisted EEPROM WRITE			[1] [2] [3]				
V_{DD}	supply voltage	minimum voltage		-	-	1.8	V
I_{DD}	supply current	minimum current, $I_{out-^{\wedge}-}$ = 0 μA		-	-	7	μA
		I_{out} = 100 μA		-	-	110	μA
Minimum supply voltage/current - assisted EEPROM READ and WRITE			[4] [2] [3]				
V_{DD}	supply voltage	minimum voltage, I_{out} = 0 μA		-	1.8	1.85	V
		I_{out} = 100 μA		-	-	1.95	V
I_{DD}	supply current	minimum current, I_{out} = 0 μA		-	-	125	μA
		I_{out} = 100 μA		-	-	265	μA
Maximum supply voltage/current			[2] [5]				
V_{DD}	supply voltage	absolute maximum voltage		2.2	-	-	V
$I_{i(max)}$	maximum input current	absolute maximum current		280	-	-	μA

[1] Activates Digital Output (OUT pin), increases read range (external supplied).
[2] Operating the chip outside the specified voltage range may lead to undefined behaviour.
[3] Either the voltage or the current needs to be above given values to guarantee specified functionality.
[4] Activates Digital Output (OUT pin), increases read and write range (external supplied).
[5] No proper operation is guaranteed if both, voltage and current, limits are exceeded.

Table 29. G2iL, G2iL+ VDD and OUT pin characteristics

Symbol	Parameter	Conditions		Min	Typ	Max	Unit
OUT pin characteristics							
V_{OL}	Low-level output voltage	Isink = 1 mA		-	-	100	mV
V_{OH}	HIGH-level output voltage	VDD = 1.8 V; Isource = -100 μA		1.5	-	-	V
VDD/OUT pin characteristics							
C_L	load capacitance	VDD - OUT pin max.	[1]	-	-	5	pF
V_o	output voltage	maximum RF peak voltage on VDD-OUT pins	[2]	-	-	500	mV
VDD/OUT pin tamper alarm characteristics			[3]				
$R_{L(max)}$	maximum load resistance	resistance range high	[4]	-	-	<2	MΩ
$R_{L(min)}$	minimum load resistance	resistance range low	[5]	>20	-	-	MΩ

[1] Is the sum of the allowed capacitance of the VDD and OUT pin referenced to RFN.
[2] Is the maximum allowed RF input voltage coupling to the VDD/OUT pin to guarantee undisturbed chip functionality.
[3] Resistance between VDD and OUT pin in checked during power up only.
[4] Resistance range to achieve tamper alarm flag = 1.
[5] Resistance range to achieve tamper alarm flag = 0:

For further reading we recommend application note "FAQ UCODE G2iL+" ([3]) describing the output characteristics more in detail. An example schematic is available in application

All information provided in this document is subject to legal disclaimers.

© NXP B.V. 2019. All rights reserved.

note "UCODE G2iL+ Demo board Manual" ([4]). The documents are available at NXP Document Control or at the website www.nxp.com.

Table 30. G2iL, G2iL+ memory characteristics

Symbol	Parameter	Conditions		Min	Typ	Max	Unit
EEPROM characteristics							
t_{ret}	retention time	$T_{amb} \leq 55$ °C		20	-	-	year
$N_{endu(W)}$	write endurance			1000	10000[1]	-	cycle

[1] $T_{amb} \leq 25$ °C

12.2 UCODE G2iL SOT886 characteristics

Table 31. G2iL RF interface characteristics (RFN, RFP)

Symbol	Parameter	Conditions		Min	Typ	Max	Unit
Normal mode - no external supply, read range reduction OFF							
$P_{i(min)}$	minimum input power	READ sensitivity	[1][2]	-	-17.6	-	dBm
Z	impedance	915 MHz	[3]	-	21 -j199	-	Ω
Normal mode - externally supplied, read range reduction OFF							
$P_{i(min)}$	minimum input power	READ sensitivity	[1][2]	-	-27	-	dBm
Z	impedance	915 MHz	[3]	-	5.6 -j204	-	Ω

[1] Power to process a Query command.
[2] Measured with a 50 Ω source impedance.
[3] At minimum operating power.

Remark: For DC and memory characteristics refer to Table 28, Table 29 and Table 30.

All information provided in this document is subject to legal disclaimers.

© NXP B.V. 2019. All rights reserved.

13 Package outline

XSON6: plastic, extremely thin small outline package; no leads; 6 terminals; body 1.0 x 1.45 x 0.5 mm **SOT886-1**

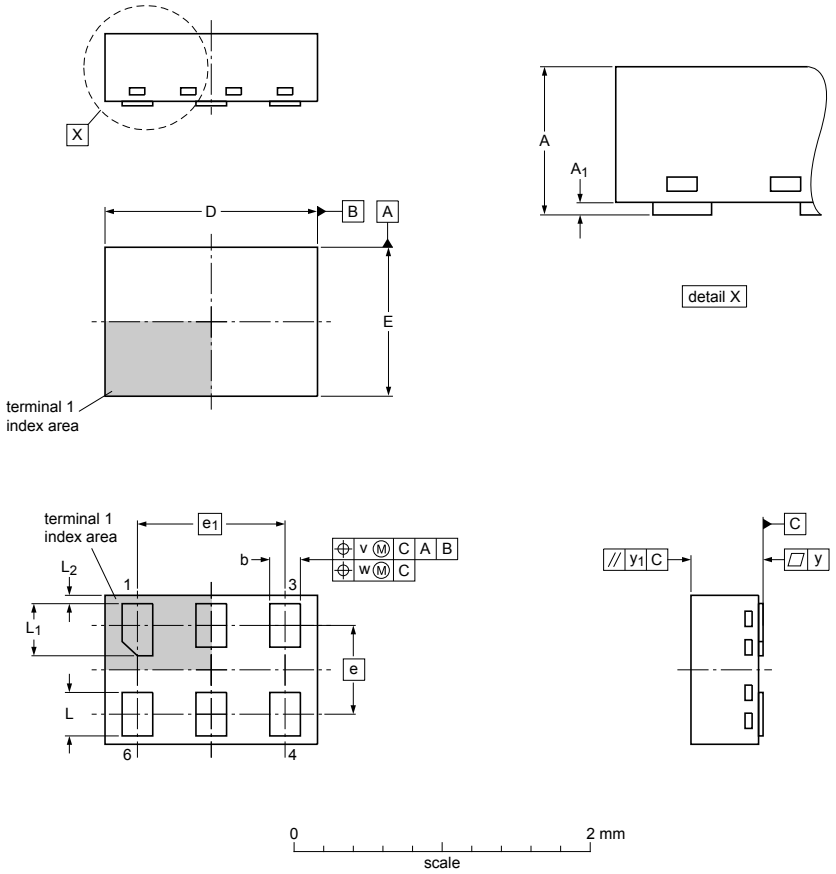

Dimensions (mm are the original dimensions)

Unit		A	A_1	b	D	E	e	e_1	L	L_1	L_2	v	w	y	y_1
mm	max	0.50	0.05	0.25	1.50	1.05			0.35	0.40	0.10				
	nom			0.20	1.45	1.00	0.6	1.0	0.30	0.35	0.05	0.10	0.05	0.05	0.05
	min		0.00	0.17	1.40	0.95			0.27	0.32	0.02				

Note
1. Plastic or metal protrusions of 0.075 mm maximum per side are not included.

sot886-1_po

Outline version	References				European projection	Issue date
	IEC	JEDEC	JEITA			
SOT886-1						~~13-07-03~~ 13-07-10

Figure 8. Package outline SOT886

All information provided in this document is subject to legal disclaimers.

© NXP B.V. 2019. All rights reserved.

14 Packing information

14.1 Wafer

See [2]

14.2 SOT886

Part orientation T1. For details please refer to http://www.standardics.nxp.com/packaging/packing/pdf/sot886.t1.t4.pdf

All information provided in this document is subject to legal disclaimers.

© NXP B.V. 2019. All rights reserved.

15 Abbreviations

Table 32. Abbreviations

Acronym	Description
CRC	Cyclic Redundancy Check
CW	Continuous Wave
DSB-ASK	Double Side Band-Amplitude Shift Keying
DC	Direct Current
EAS	Electronic Article Surveillance
EEPROM	Electrically Erasable Programmable Read Only Memory
EPC	Electronic Product Code (containing Header, Domain Manager, Object Class and Serial Number)
FM0	Bi phase space modulation
G2	Generation 2
IC	Integrated Circuit
PIE	Pulse Interval Encoding
RRRR	Real Read Range Reduction
PSF	Product Status Flag
RF	Radio Frequency
UHF	Ultra High Frequency
SECS	Semi Equipment Communication Standard
TID	Tag IDentifier

All information provided in this document is subject to legal disclaimers.

© NXP B.V. 2019. All rights reserved.

16 References

[1] EPCglobal: EPC Radio-Frequency Identity Protocols Class-1 Generation-2 UHF RFID Protocol for Communications at 860 MHz – 960 MHz, Version 1.1.0 (December 17, 2005)

[2] Data sheet - Delivery type description – General specification for 8" wafer on UV-tape with electronic fail die marking, BU-ID document number: 1093**[5]

[3] Application note - AN10840 FAQ UCODE G2i

[4] Application note - AN11237 UCODE G2iM+ demo board documentation

5 ** ... document version number

All information provided in this document is subject to legal disclaimers.

© NXP B.V. 2019. All rights reserved.

17 Revision history

Table 33. Revision history

Document ID	Release date	Data sheet status	Change notice	Supersedes
SL3S1203_1213 v.4.5	20190212	Product data sheet	-	SL3S1203_1213 v.4.4
Modifications:	• Section 16: updated			
SL3S1203_1213 v.4.4	20140317	Product data sheet	-	SL3S1203_1213 v.4.3
Modifications:	• Table 8: Table notes updated • Figure 5: TIDs updated			
SL3S1203_1213 v.4.3	20131127	Product data sheet	-	SL3S1203_1213 v.4.2
Modifications:	• Figure 5: updated			
SL3S1203_1213 v.4.2	20130701	Product data sheet	-	SL3S1203_1213 v.4.1
Modifications:	• Update of delivery form • Update RF field detection			
SL3S1203_1213 v.4.1	20120917	Product data sheet	-	SL3S1203_1213 v.4.0
Modifications:	• Update of delivery form			
SL3S1203_1213 v.4.0	20120227	Product data sheet	-	SL3S1203_1213 v.3.9
Modifications:	• Figure 4 "G2iL wafer layout": Figure notes (1) and (2) updated			
SL3S1203_1213 v.3.9	20120130	Product data sheet	-	SL3S1203_1213 v.3.8
Modifications:	• Table 6 "Specifications": "Passivation on front" updated • Section 15.2.1 "General assembly recommendations": updated			
SL3S1203_1213 v.3.8	20120111	Product data sheet	-	SL3S1203_1213 v.3.7
Modifications:	• Section 8.1 "Wafer layout": Figure notes (1) and (2) updated			
SL3S1203_1213 v.3.7	20111124	Product data sheet	-	SL3S1203_1213 v.3.6
Modifications:	• Table 11 "G2iL, G2iL+ overall memory map": updated • Table 34 "G2iL, G2iL+ RF interface characteristics (RFN, RFP)": updated			
SL3S1203_1213 v.3.6	20110803	Product data sheet	-	SL3S1203_1213 v.3.5
Modifications:	• Real Read Range Reduction feature added to G2iL			
SL3S1203_1213 v.3.5	20110531	Product data sheet	-	SL3S1203_1213 v.3.4
Modifications:	• Superfluous text removed from Table 6			
SL3S1203_1213 v.3.4	20110511	Product data sheet	-	SL3S1203_1213 v.3.3
Modifications:	• Security status changed into COMPANY PUBLIC • Delivery form of FCS2 strap added • Section 13 "Package information", Section 15 "Handling information" and Section 16 "Packing information" added			
SL3S1203_1213 v.3.3	20110131	Product data sheet	-	SL3S1203_1213 v.3.2
Modifications:	• Section 4 "Ordering information": new types SL3S1203FUD and SL3S1213FUD added • Section 9 "Mechanical specification": updated according to the new types • Replaced wording of "ChangeStatus" with "ChangeConfig"			
SL3S1203_1213 v.3.2	20101109	Product data sheet	-	SL3S1203_1213 v.3.1

All information provided in this document is subject to legal disclaimers.

© NXP B.V. 2019. All rights reserved.

Document ID	Release date	Data sheet status	Change notice	Supersedes
Modifications:	• Version SOT886F1 added • Section 5 "Marking", Section 13 "Package outline" and Section 14 "Packing information" added			
SL3S1203_1213 v.3.1	20100922	Product data sheet	-	SL3S1203_1213 v.3.0
Modifications:	• General Modifications			
SL3S1203_1213 v.3.0	20100621	Product data sheet	-	178810
Modifications:	• General update			
178810	20100304	Objective data sheet	-	-

All information provided in this document is subject to legal disclaimers.

© NXP B.V. 2019. All rights reserved.

18 Legal information

18.1 Data sheet status

Document status[1][2]	Product status[3]	Definition
Objective [short] data sheet	Development	This document contains data from the objective specification for product development.
Preliminary [short] data sheet	Qualification	This document contains data from the preliminary specification.
Product [short] data sheet	Production	This document contains the product specification.

[1] Please consult the most recently issued document before initiating or completing a design.
[2] The term 'short data sheet' is explained in section "Definitions".
[3] The product status of device(s) described in this document may have changed since this document was published and may differ in case of multiple devices. The latest product status information is available on the Internet at URL http://www.nxp.com.

18.2 Definitions

Draft — The document is a draft version only. The content is still under internal review and subject to formal approval, which may result in modifications or additions. NXP Semiconductors does not give any representations or warranties as to the accuracy or completeness of information included herein and shall have no liability for the consequences of use of such information.

Short data sheet — A short data sheet is an extract from a full data sheet with the same product type number(s) and title. A short data sheet is intended for quick reference only and should not be relied upon to contain detailed and full information. For detailed and full information see the relevant full data sheet, which is available on request via the local NXP Semiconductors sales office. In case of any inconsistency or conflict with the short data sheet, the full data sheet shall prevail.

Product specification — The information and data provided in a Product data sheet shall define the specification of the product as agreed between NXP Semiconductors and its customer, unless NXP Semiconductors and customer have explicitly agreed otherwise in writing. In no event however, shall an agreement be valid in which the NXP Semiconductors product is deemed to offer functions and qualities beyond those described in the Product data sheet.

18.3 Disclaimers

Limited warranty and liability — Information in this document is believed to be accurate and reliable. However, NXP Semiconductors does not give any representations or warranties, expressed or implied, as to the accuracy or completeness of such information and shall have no liability for the consequences of use of such information. NXP Semiconductors takes no responsibility for the content in this document if provided by an information source outside of NXP Semiconductors. In no event shall NXP Semiconductors be liable for any indirect, incidental, punitive, special or consequential damages (including - without limitation - lost profits, lost savings, business interruption, costs related to the removal or replacement of any products or rework charges) whether or not such damages are based on tort (including negligence), warranty, breach of contract or any other legal theory. Notwithstanding any damages that customer might incur for any reason whatsoever, NXP Semiconductors' aggregate and cumulative liability towards customer for the products described herein shall be limited in accordance with the Terms and conditions of commercial sale of NXP Semiconductors.

Right to make changes — NXP Semiconductors reserves the right to make changes to information published in this document, including without limitation specifications and product descriptions, at any time and without notice. This document supersedes and replaces all information supplied prior to the publication hereof.

Suitability for use — NXP Semiconductors products are not designed, authorized or warranted to be suitable for use in life support, life-critical or safety-critical systems or equipment, nor in applications where failure or malfunction of an NXP Semiconductors product can reasonably be expected to result in personal injury, death or severe property or environmental damage. NXP Semiconductors and its suppliers accept no liability for inclusion and/or use of NXP Semiconductors products in such equipment or applications and therefore such inclusion and/or use is at the customer's own risk.

Applications — Applications that are described herein for any of these products are for illustrative purposes only. NXP Semiconductors makes no representation or warranty that such applications will be suitable for the specified use without further testing or modification. Customers are responsible for the design and operation of their applications and products using NXP Semiconductors products, and NXP Semiconductors accepts no liability for any assistance with applications or customer product design. It is customer's sole responsibility to determine whether the NXP Semiconductors product is suitable and fit for the customer's applications and products planned, as well as for the planned application and use of customer's third party customer(s). Customers should provide appropriate design and operating safeguards to minimize the risks associated with their applications and products. NXP Semiconductors does not accept any liability related to any default, damage, costs or problem which is based on any weakness or default in the customer's applications or products, or the application or use by customer's third party customer(s). Customer is responsible for doing all necessary testing for the customer's applications and products using NXP Semiconductors products in order to avoid a default of the applications and the products or of the application or use by customer's third party customer(s). NXP does not accept any liability in this respect.

Limiting values — Stress above one or more limiting values (as defined in the Absolute Maximum Ratings System of IEC 60134) will cause permanent damage to the device. Limiting values are stress ratings only and (proper) operation of the device at these or any other conditions above those given in the Recommended operating conditions section (if present) or the Characteristics sections of this document is not warranted. Constant or repeated exposure to limiting values will permanently and irreversibly affect the quality and reliability of the device.

Terms and conditions of commercial sale — NXP Semiconductors products are sold subject to the general terms and conditions of commercial sale, as published at http://www.nxp.com/profile/terms, unless otherwise agreed in a valid written individual agreement. In case an individual agreement is concluded only the terms and conditions of the respective agreement shall apply. NXP Semiconductors hereby expressly objects to applying the customer's general terms and conditions with regard to the purchase of NXP Semiconductors products by customer.

All information provided in this document is subject to legal disclaimers.

© NXP B.V. 2019. All rights reserved.

No offer to sell or license — Nothing in this document may be interpreted or construed as an offer to sell products that is open for acceptance or the grant, conveyance or implication of any license under any copyrights, patents or other industrial or intellectual property rights.

Quick reference data — The Quick reference data is an extract of the product data given in the Limiting values and Characteristics sections of this document, and as such is not complete, exhaustive or legally binding.

Export control — This document as well as the item(s) described herein may be subject to export control regulations. Export might require a prior authorization from competent authorities.

Non-automotive qualified products — Unless this data sheet expressly states that this specific NXP Semiconductors product is automotive qualified, the product is not suitable for automotive use. It is neither qualified nor tested in accordance with automotive testing or application requirements. NXP Semiconductors accepts no liability for inclusion and/or use of non-automotive qualified products in automotive equipment or applications. In the event that customer uses the product for design-in and use in automotive applications to automotive specifications and standards, customer (a) shall use the product without NXP Semiconductors' warranty of the product for such automotive applications, use and specifications, and (b) whenever customer uses the product for automotive applications beyond NXP Semiconductors' specifications such use shall be solely at customer's own risk, and (c) customer fully indemnifies NXP Semiconductors for any liability, damages or failed product claims resulting from customer design and use of the product for automotive applications beyond NXP Semiconductors' standard warranty and NXP Semiconductors' product specifications.

Translations — A non-English (translated) version of a document is for reference only. The English version shall prevail in case of any discrepancy between the translated and English versions.

18.4 Trademarks

Notice: All referenced brands, product names, service names and trademarks are the property of their respective owners.

UCODE — is a trademark of NXP B.V.

All information provided in this document is subject to legal disclaimers.

© NXP B.V. 2019. All rights reserved.

Tables

Tab. 1. Ordering information 5
Tab. 2. Marking codes 6
Tab. 3. Pin description bare die 8
Tab. 4. Pin description SOT886 8
Tab. 5. Specifications 10
Tab. 6. Overview of G2iL and G2iL+ features 13
Tab. 7. G2iL memory sections 13
Tab. 8. G2iL, G2iL+ overall memory map 14
Tab. 9. ChangeConfig custom command 20
Tab. 10. ChangeConfig custom command reply 20
Tab. 11. ChangeConfig command-response table 20
Tab. 12. Address 200h to 207h 22
Tab. 13. Address 208h to 20Fh 22
Tab. 14. ReadProtect command 23
Tab. 15. G2iL reply to a successful ReadProtect procedure 23
Tab. 16. ReadProtect command-response table 23
Tab. 17. Reset ReadProtect command 24
Tab. 18. G2iL reply to a successful Reset ReadProtect command 24
Tab. 19. Reset ReadProtect command-response table 25
Tab. 20. ChangeEAS command 26
Tab. 21. G2iL reply to a successful ChangeEAS command 26
Tab. 22. ChangeEAS command-response table 26
Tab. 23. EAS_Alarm command 27
Tab. 24. G2iL reply to a successful EAS_Alarm command 27
Tab. 25. EAS_Alarm command-response table 27
Tab. 26. Limiting values 28
Tab. 27. G2iL, G2iL+ RF interface characteristics (RFN, RFP) 29
Tab. 28. VDD pin characteristics 30
Tab. 29. G2iL, G2iL+ VDD and OUT pin characteristics 30
Tab. 30. G2iL, G2iL+ memory characteristics 31
Tab. 31. G2iL RF interface characteristics (RFN, RFP) 31
Tab. 32. Abbreviations 34
Tab. 33. Revision history 36

All information provided in this document is subject to legal disclaimers.

© NXP B.V. 2019. All rights reserved.

Figures

Fig. 1. Block diagram of G2iL IC 7
Fig. 2. Pinning bare die 8
Fig. 3. Pin configuration for SOT886 8
Fig. 4. G2iL wafer layout 9
Fig. 5. G2iL TID memory structure 16
Fig. 6. Schematic of connecting VDD and OUT pad with a predetermined breaking point to turn a standard RFID label into a wireless safety seal 18
Fig. 7. Schematic of external power supply 19
Fig. 8. Package outline SOT886 32

All information provided in this document is subject to legal disclaimers.

© NXP B.V. 2019. All rights reserved.

Contents

1 General description ... 1
2 Features and benefits ... 2
2.1 Key features ... 2
2.1.1 Memory ... 2
2.2 Key benefits ... 2
2.2.1 End user benefit ... 2
2.2.2 Antenna design benefits ... 2
2.2.3 Label manufacturer benefit ... 3
2.3 Custom commands ... 3
3 Applications ... 4
3.1 Markets ... 4
3.2 Applications ... 4
4 Ordering information ... 5
5 Marking ... 6
6 Block diagram ... 7
7 Pinning information ... 8
7.1 Pin description ... 8
8 Wafer layout ... 9
8.1 Wafer layout ... 9
9 Mechanical specification ... 10
9.1 Wafer specification ... 10
9.1.1 Wafer ... 10
9.1.2 Fail die identification ... 11
9.1.3 Map file distribution ... 11
10 Functional description ... 12
10.1 Air interface standards ... 12
10.2 Power transfer ... 12
10.3 Data transfer ... 12
10.3.1 Reader to tag Link ... 12
10.3.2 Tag to reader Link ... 12
10.4 G2iL and G2iL+ differences ... 13
10.5 Supported commands ... 13
10.6 G2iL, G2iL+ memory ... 13
10.6.1 G2iL, G2iL+ overall memory map ... 14
10.6.2 G2iL TID memory details ... 16
10.7 Custom commands ... 17
10.7.1 ChangeConfig ... 17
10.7.2 G2iL, G2iL+ special features control mechanism ... 21
10.7.3 Reset ReadProtect3 ... 23
10.7.4 ChangeEAS3 ... 25
10.7.5 EAS_Alarm ... 26
11 Limiting values ... 28
12 Characteristics ... 29
12.1 UCODE G2iL, G2iL+ bare die characteristics ... 29
12.2 UCODE G2iL SOT886 characteristics ... 31
13 Package outline ... 32
14 Packing information ... 33
14.1 Wafer ... 33
14.2 SOT886 ... 33
15 Abbreviations ... 34
16 References ... 35
17 Revision history ... 36
18 Legal information ... 38

Please be aware that important notices concerning this document and the product(s) described herein, have been included in section 'Legal information'.

© NXP B.V. 2019. All rights reserved.

For more information, please visit: http://www.nxp.com
For sales office addresses, please send an email to: salesaddresses@nxp.com

Date of release: 12 February 2019
Document identifier: SL3S1203_1213
Document number: 178845

ООО «ЛайфЭлектроникс» “LifeElectronics” LLC

ИНН 7805602321 КПП 780501001 Р/С 40702810122510004610 ФАКБ "АБСОЛЮТ БАНК" (ЗАО) в г.Санкт-Петербурге К/С 30101810900000000703 БИК 044030703

Компания «Life Electronics» занимается поставками электронных компонентов импортного и отечественного производства от производителей и со складов крупных дистрибьюторов Европы, Америки и Азии.

С конца 2013 года компания активно расширяет линейку поставок компонентов по направлению коаксиальный кабель, кварцевые генераторы и конденсаторы (керамические, пленочные, электролитические), за счёт заключения дистрибьюторских договоров

Мы предлагаем:

- *Конкурентоспособные цены и скидки постоянным клиентам.*
- *Специальные условия для постоянных клиентов.*
- *Подбор аналогов.*
- *Поставку компонентов в любых объемах, удовлетворяющих вашим потребностям.*

- *Приемлемые сроки поставки, возможна ускоренная поставка.*
- *Доставку товара в любую точку России и стран СНГ.*
- *Комплексную поставку.*
- *Работу по проектам и поставку образцов.*
- *Формирование склада под заказчика.*

- *Сертификаты соответствия на поставляемую продукцию (по желанию клиента).*
- *Тестирование поставляемой продукции.*
- *Поставку компонентов, требующих военную и космическую приемку.*
- *Входной контроль качества.*
- *Наличие сертификата ISO.*

В составе нашей компании организован Конструкторский отдел, призванный помогать разработчикам, и инженерам.

Конструкторский отдел помогает осуществить:

- *Регистрацию проекта у производителя компонентов.*
- *Техническую поддержку проекта.*
- *Защиту от снятия компонента с производства.*
- *Оценку стоимости проекта по компонентам.*
- *Изготовление тестовой платы монтаж и пусконаладочные работы.*

Тел: +7 (812) 336 43 04 (многоканальный)
Email: org@lifeelectronics.ru

www.lifeelectronics.ru