Perfecting the Art of Electronics

ALPS®

Power Switch with Encoder

NEW 2011

SDDE Series

Main power ON/OFF, Mode selection, Start can be completed with one switch

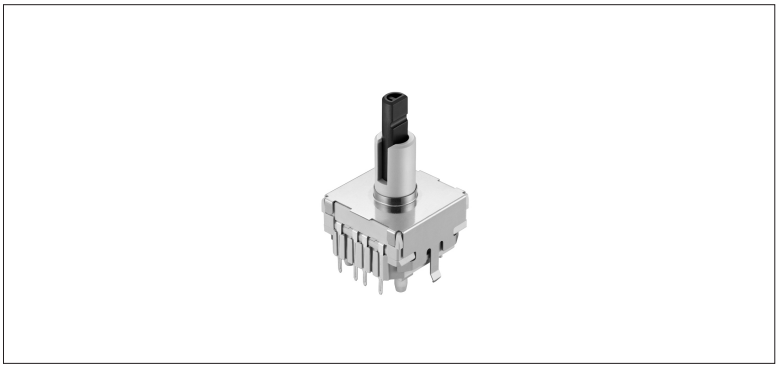

Features

- Two shafts are combined.
  Center shaft：Push switch (Unlatching)
  Out side Shaft：Encoder
- Zero standby power consumption is available by auto-off function with relay movement due to built-in both AC and DC contact in the push switch
- Both pulse and absolute output are available for the installed encoder

Applications

- Dryer, Micro wave oven, IH cooking heater, Washing machine

Typical Specifications

Items	Specifications
Rating AC contact	1A/16A 250V～
Rating DC contact	20mA 12V DC
Rating Encoder	0.1A 12V DC
Operating life (Encoder)	30,000cycles
Push travel	1.85mm

Dimensions

Unit：mm

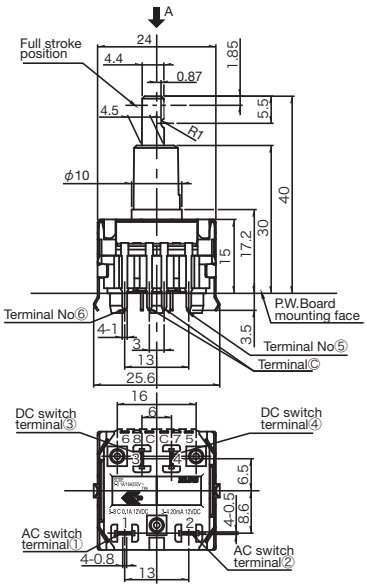

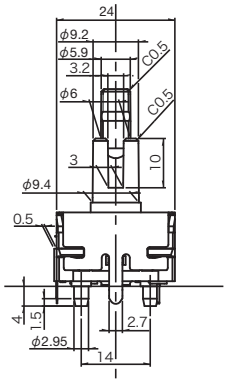

Recommended Hole Dimension
(t=1.6)

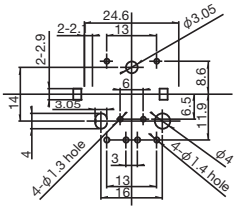

Circuit Diagram

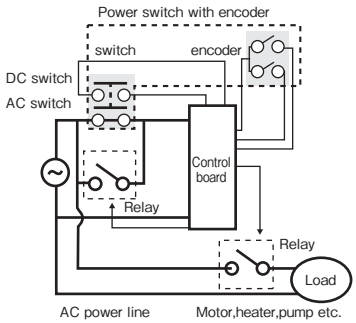

Precautions when handling our products

1. For the export of products which are controlled items subject to foreign and domestic export laws and regulations, you must obtain approval and/or follow the formalities of such laws and regulations.
2. Products must not be used for military and/or antisocial purposes such as terrorism, and shall not be supplied to any party intending to use the products for such purposes.
3. Unless provided otherwise, the products have been designed and manufactured for application in equipment and devices which are sold to end-users in the market, such as AV (audio visual) equipment, home electronic equipment, office and commercial electronic equipment, information and communication equipment or amusement equipment. The products are not intended for use in, and must not be used for, any application of nuclear equipment, driving control equipment for aerospace or any other unauthorized use.
   With the exception of the above mentioned banned applications, for applications involving high levels of safety and liability such as medical equipment, burglar alarm equipment, disaster prevention equipment and undersea equipment, please contact an Alps sales representative and/or evaluate the total system on the applicability. Also, implement a fail-safe design, protection circuit, redundant circuit, malfunction protection and/or fire protection into the complete system for safety and reliability of the total system.
4. Before using products which were not specifically designed for use in automotive applications, please contact an Alps sales representative.

Cautions for using this catalog

1. Specifications indicated in this catalog are an outline only. When employing the product, please use an officially authorized specification sheet for the supply contract.
2. Unless specifically indicated otherwise, products in this catalog have been designed and manufactured for use in ordinary electronic equipment and devices, such as AV equipment, electrical home appliances, office machines and communications equipment. Equipment manufacturers are consequently advised that when these products are planned for use in equipment that requires a high degree of safety and reliability, especially items like medical equipment, aviation and aircraft equipment, space equipment and burglar alarm equipment, they should ensure equipment safety by providing protection and redundant circuitry and should fully study the suitability of such products for the intended equipment.
3. The external appearance, performance and other properties of the product are subject to change for improvement without prior notice. Products introduced in this catalog may be discontinued without prior notice.
4. Names of products and companies and titles of specifications indicated in this catalog are mostly trademarks or registered trademarks of their respective owners.
5. Please contact us for any enquiries and queries on our products and their uses.
6. The information in this catalog is based on our research as of September 2011.
7. This catalog is valid until December 31, 2011.

Inquiries about this product

Products Information Center
+81 (3) 5499-8154
Products Information Site
http://www.alps.com/products/e/

ALPS ELECTRIC CO., LTD.
1-7,Yukigaya-otsukamachi,Ota-ku,Tokyo,145-8501,Japan

PRINTED WITH SOY INK 大豆油インキで印刷しています。
R100 古紙配合率100%再生紙を使用しています。
Printed in Japan 2008-12BV

このパンフレットは、ユニバーサルデザインです。

ООО «ЛайфЭлектроникс» “LifeElectronics” LLC

ИНН 7805602321 КПП 780501001 Р/С 40702810122510004610 ФАКБ "АБСОЛЮТ БАНК" (ЗАО) в г.Санкт-Петербурге К/С 30101810900000000703 БИК 044030703

Компания «Life Electronics» занимается поставками электронных компонентов импортного и отечественного производства от производителей и со складов крупных дистрибьюторов Европы, Америки и Азии.

С конца 2013 года компания активно расширяет линейку поставок компонентов по направлению коаксиальный кабель, кварцевые генераторы и конденсаторы (керамические, пленочные, электролитические), за счёт заключения дистрибьюторских договоров

Мы предлагаем:

- *Конкурентоспособные цены и скидки постоянным клиентам.*
- *Специальные условия для постоянных клиентов.*
- *Подбор аналогов.*
- *Поставку компонентов в любых объемах, удовлетворяющих вашим потребностям.*

- *Приемлемые сроки поставки, возможна ускоренная поставка.*
- *Доставку товара в любую точку России и стран СНГ.*
- *Комплексную поставку.*
- *Работу по проектам и поставку образцов.*
- *Формирование склада под заказчика.*

- *Сертификаты соответствия на поставляемую продукцию (по желанию клиента).*
- *Тестирование поставляемой продукции.*
- *Поставку компонентов, требующих военную и космическую приемку.*
- *Входной контроль качества.*
- *Наличие сертификата ISO.*

В составе нашей компании организован Конструкторский отдел, призванный помогать разработчикам, и инженерам.

Конструкторский отдел помогает осуществить:

- *Регистрацию проекта у производителя компонентов.*
- *Техническую поддержку проекта.*
- *Защиту от снятия компонента с производства.*
- *Оценку стоимости проекта по компонентам.*
- *Изготовление тестовой платы монтаж и пусконаладочные работы.*

Тел: +7 (812) 336 43 04 (многоканальный)
Email: org@lifeelectronics.ru

www.lifeelectronics.ru