AX8052F143

SoC Ultra-Low Power RF-Microcontroller for RF Carrier Frequencies in the Range 27 - 1050 MHz

ON Semiconductor®

www.onsemi.com

OVERVIEW

Features

SoC Ultra−low Power Advanced Narrow−band RF−microcontroller for Wireless Communication Applications

- QFN40 Package
- Supply Range 1.8 V − 3.6 V
- −40°C to 85°C
- Ultra−low Power Consumption:
  - CPU Active Mode 150 μA/MHz
  - Sleep Mode with 256 Byte RAM Retention and Wake−up Timer running 900 nA
  - Sleep Mode 4 kByte RAM Retention and Wake−up Timer running 1.5 μA
  - Sleep Mode 8 kByte RAM Retention and Wake−up Timer running 2.2 μA
  - Radio RX−mode
    6.5 mA @ 169 MHz
    9.5 mA @ 868 MHz and 433 MHz
  - Radio TX−mode at 868 MHz
    7.5 mA @ 0 dBm
    16 mA @ 10 dBm
    48 mA @ 16 dBm

AX8052

- Ultra−low Power MCU Core Compatible with Industry Standard 8052 Instruction Set
- Down to 500 nA Wake−up Current
- Single Cycle/Instruction for many Instructions
- 64 kByte In−system Programmable FLASH
- Code Protection Lock
- 8.25 kByte SRAM
- 3−wire (1 dedicated, 2 shared) In−circuit Debug Interface
- Three 16−bit Timers with ΣΔ Output Capability
- Two 16−bit Wakeup Timers
- Two Input Captures
- Two Output Compares with PWM Capability
- 10−bit 500 ksample/s Analog−to−Digital Converter
- Temperature Sensor
- Two Analog Comparators
- Two UARTs
- One General Purpose Master/Slave SPI
- Two Channel DMA Controller
- Multi−megabit/s AES Encryption/Decryption Engine, supports AES−128, AES−192 and AES−256 with True Random Number Generator (TRNG)
  NOTE: The AES Engine and the TRNG require Software Enabling and Support.
- Ultra−low Power 10 kHz/640 Hz Wakeup Oscillator, with Automatic Calibration against a Precise Clock
- Internal 20 MHz RC Oscillator, with Automatic Calibration against a Precise Clock for Flexible System Clocking
- Low Frequency Tuning Fork Crystal Oscillator for Accurate Low Power Time Keeping
- Brown−out and Power−on−Reset Detection

High Performance Narrow−band RF Transceiver compatible to AX5043 (FSK/MSK/4−FSK/GFSK/GMSK/ASK/AFSK/FM/PSK)

- Receiver
  - Carrier Frequencies from 27 to 1050 MHz
  - Data Rates from 0.1 kbps to 125 kbps
  - Optional Forward Error Correction (FEC)
  - Sensitivity without FEC
    −135 dBm @ 0.1 kbps, 868 MHz, FSK
    −126 dBm @ 1 kbps, 868 MHz, FSK
    −117 dBm @ 10 kbps, 868 MHz, FSK
    −107 dBm @ 100 kbps, 868 MHz, FSK
    −105 dBm @ 125 kbps, 868 MHz, FSK

    −138 dBm @ 0.1 kbps, 868 MHz, PSK
    −130 dBm @ 1 kbps, 868 MHz, PSK
    −120 dBm @ 10 kbps, 868 MHz, PSK
    −109 dBm @ 100 kbps, 868 MHz, PSK
    −108 dBm @ 125 kbps, 868 MHz, PSK

© Semiconductor Components Industries, LLC, 2015

November, 2015 − Rev. 3

Publication Order Number:
AX8052F143/D

- Sensitivity with FEC
  −137 dBm @ 0.1 kbps, 868 MHz, FSK
  −122 dBm @ 5 kbps, 868 MHz, FSK
  −111 dBm @ 50 kbps, 868 MHz, FSK
- High Selectivity Receiver with up to 47 dB Adjacent Channel Rejection
- 0 dBm Maximum Input Power
- ±10% Data−rate Error Tolerance
- Support for Antenna Diversity with External Antenna Switch
- Short Preamble Modes allow the Receiver to work with as little as 16 Preamble Bits
- Fast State Switching Times
  200 μs TX → RX Switching Time
  62 μs RX → TX Switching Time

- Transmitter
  - Carrier Frequencies from 27 to 1050 MHz
  - Data−rates from 0.1 kbps to 125 kbps
  - High Efficiency, High Linearity Integrated Power Amplifier
  - Maximum Output Power
    16 dBm @ 868 MHz
    16 dBm @ 433 MHz
    16 dBm @ 169 MHz
  - Power Level programmable in 0.5 dB Steps
  - GFSK Shaping with BT=0.3 or BT=0.5
  - Unrestricted Power Ramp Shaping

- RF Frequency Generation
  - Configurable for Usage in 27 MHz −1050 MHz Bands
  - RF Carrier Frequency and FSK Deviation Programmable in 1 Hz Steps
  - Ultra Fast Settling RF Frequency Synthesizer for Low−power Consumption
  - Fully Integrated RF Frequency Synthesizer with VCO Auto−ranging and Band−width Boost Modes for Fast Locking
  - Configurable for either Fully Integrated VCO, Internal VCO with External Inductor or Fully External VCO
  - Configurable for either Fully Integrated or External Synthesizer Loop Filter for a Large Range of Bandwidths
  - Channel Hopping up to 2000 hops/s
  - Automatic Frequency Control (AFC)

- Flexible Antenna Interface
  - Integrated RX/TX Switching with Differential Antenna Pins
  - Mode with Differential RX Pins and Single−ended TX Pin for Usage with External PAs and for Maximum PA Efficiency at Low Output Power

- Wakeup−on−Radio
  - 640 Hz or 10 kHz Lowest Power Wake−up Timer
  - Wake−up Time Interval programmable between 98 μs and 102 s

- Sophisticated Radio Controller
  - Antenna Diversity and RX/TX Switch Control
  - Fully Automatic Packet Reception and Transmission without Micro−controller Intervention
  - Supports HDLC, Raw, Wireless M−Bus Frames and Arbitrary Defined Frames
  - Automatic Channel Noise Level Tracking
  - μs Resolution Timestamps for Exact Timing (eg. for Frequency Hopping Systems)
  - 256 Byte Micro−programmable FIFO, optionally supports Packet Sizes > 256 Bytes
  - Three Matching Units for Preamble Byte, Sync−word and Address
  - Ability to store RSSI, Frequency Offset and Data−rate Offset with the Packet Data
  - Multiple Receiver Parameter Sets allow the use of more aggressive Receiver Parameters during Preamble, dramatically shortening the Required Preamble Length at no Sensitivity Degradation

- Advanced Crystal Oscillator (RF Reference Oscillator)
  - Fast Start−up and Lowest Power Steady−state XTAL Oscillator for a Wide Range of Crystals
  - Integrated Tuning Capacitors
  - Possibility of Applying an External Clock Reference (TCXO)

Applications

27 − 1050 MHz Licensed and Unlicensed Radio Systems

- Internet of Things
- Automatic meter reading (AMR)
- Security applications
- Building automation
- Wireless networks
- Messaging Paging
- Compatible with: Wireless M−Bus, POCSAG, FLEX, KNX, Sigfox, Z−Wave, enocean
- Regulatory Regimes: EN 300 220 V2.3.1 including the Narrow−band 12.5 kHz, 20 kHz and 25 kHz Definitions; EN 300 422; FCC Part 15.247; FCC Part 15.249; FCC Part 90 6.25 kHz, 12.5 kHz and 25 kHz

BLOCK DIAGRAM

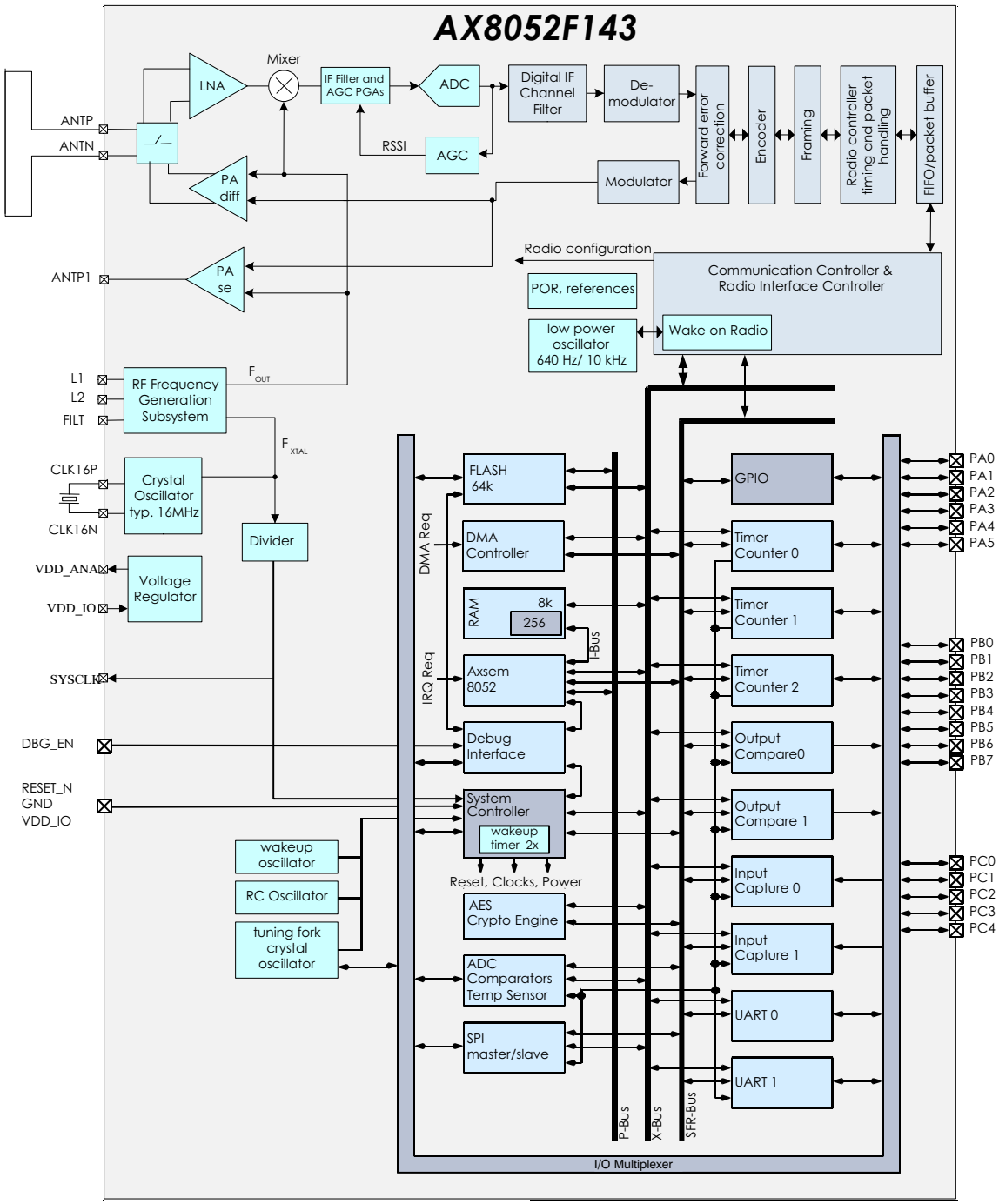

Figure 1. Functional Block Diagram of the AX8052F143

Table 1. PIN FUNCTION DESCRIPTIONS

Symbol	Pin(s)	Type	Description
VDD_ANA	1	P	Analog power output, decouple to neighboring GND
GND	2	P	Ground, decouple to neighboring VDD_ANA
ANTP	3	A	Differential antenna input/output
ANTN	4	A	Differential antenna input/output
ANTP1	5	A	Single−ended antenna output
GND	6	P	Ground, decouple to neighboring VDD_ANA
VDD_ANA	7	P	Analog power output, decouple to neighboring GND
GND	8	P	Ground
FILT	9	A	Optional synthesizer filter
L2	10	A	Optional synthesizer inductor
L1	11	A	Optional synthesizer inductor
SYSCLK	12	I/O/PU	System clock output
PC4	13	I/O/PU	General purpose IO
PC3	14	I/O/PU	General purpose IO
PC2	15	I/O/PU	General purpose IO
PC1	16	I/O/PU	General purpose IO
PC0	17	I/O/PU	General purpose IO
PB0	18	I/O/PU	General purpose IO
PB1	19	I/O/PU	General purpose IO
PB2	20	I/O/PU	General purpose IO
PB3	21	I/O/PU	General purpose IO
PB4	22	I/O/PU	General purpose IO
PB5	23	I/O/PU	General purpose IO
PB6	24	I/O/PU	General purpose IO, DBG_DATA
PB7	25	I/O/PU	General purpose IO, DBG_CLK
DBG_EN	26	I/PD	In−circuit debugger enable
RESET_N	27	I/PU	Optional reset pin. If this pin is not used it must be connected to VDD_IO
GND	28	P	Ground
VDD_IO	29	P	Unregulated power supply
PA0	30	I/O/A/PU	General purpose IO
PA1	31	I/O/A/PU	General purpose IO
PA2	32	I/O/A/PU	General purpose IO
PA3	33	I/O/A/PU	General purpose IO
PA4	34	I/O/A/PU	General purpose IO
PA5	35	I/O/A/PU	General purpose IO
VDD_IO	36	P	Unregulated power supply
TST1	37	A	Must be connected to GND
TST2	38	A	Must be connected to GND
CLK16N	39	A	Crystal oscillator input/output (RF reference oscillator)
CLK16P	40	A	Crystal oscillator input/output (RF reference oscillator)
GND	Center pad	P	Ground on center pad of QFN, must be connected

A = analog input
I = digital input signal
O = digital output signal
PU = pull−up
I/O = digital input/output signal
N = not to be connected
P = power or ground
PD = pull−down

All digital inputs are Schmitt trigger inputs, digital input and output levels are LVCMOS/LVTTL compatible. Port A Pins (PA0 − PA7) must not be driven above VDD_IO, all other digital inputs are 5 V tolerant. Pull−ups are programmable for all GPIO pins.

Alternate Pin Functions

GPIO Pins are shared with dedicated Input/Output signals of on−chip peripherals. The following table lists the available functions on each GPIO pin.

Table 2. ALTERNATE PIN FUNCTIONS

GPIO	Alternate Functions				
PA0	T0OUT	IC1	ADC0		
PA1	T0CLK	OC1	ADC1		
PA2	OC0	U1RX	ADC2	COMPI00	
PA3	T1OUT		ADC3	LPXTALP	
PA4	T1CLK	COMPO0	ADC4	LPXTALN	
PA5	IC0	U1TX	ADC5	COMPI10	
PB0	U1TX	IC1	EXTIRQ0		
PB1	U1RX	OC1			
PB2	IC0	T2OUT			PWRAMP
PB3	OC0	T2CLK	EXTIRQ1	DSWAKE	ANTSEL
PB4	U0TX	T1CLK			
PB5	U0RX	T1OUT			
PB6	DBG_DATA				
PB7	DBG_CLK				
PC0	SSEL	T0OUT	EXTIRQ0		
PC1	SSCK	T0CLK	COMPO1		
PC2	SMOSI	U0TX			
PC3	SMISO	U0RX	COMPO0		
PC4	COMPO1	ADCTRIG	EXTIRQ1		

Pinout Drawing

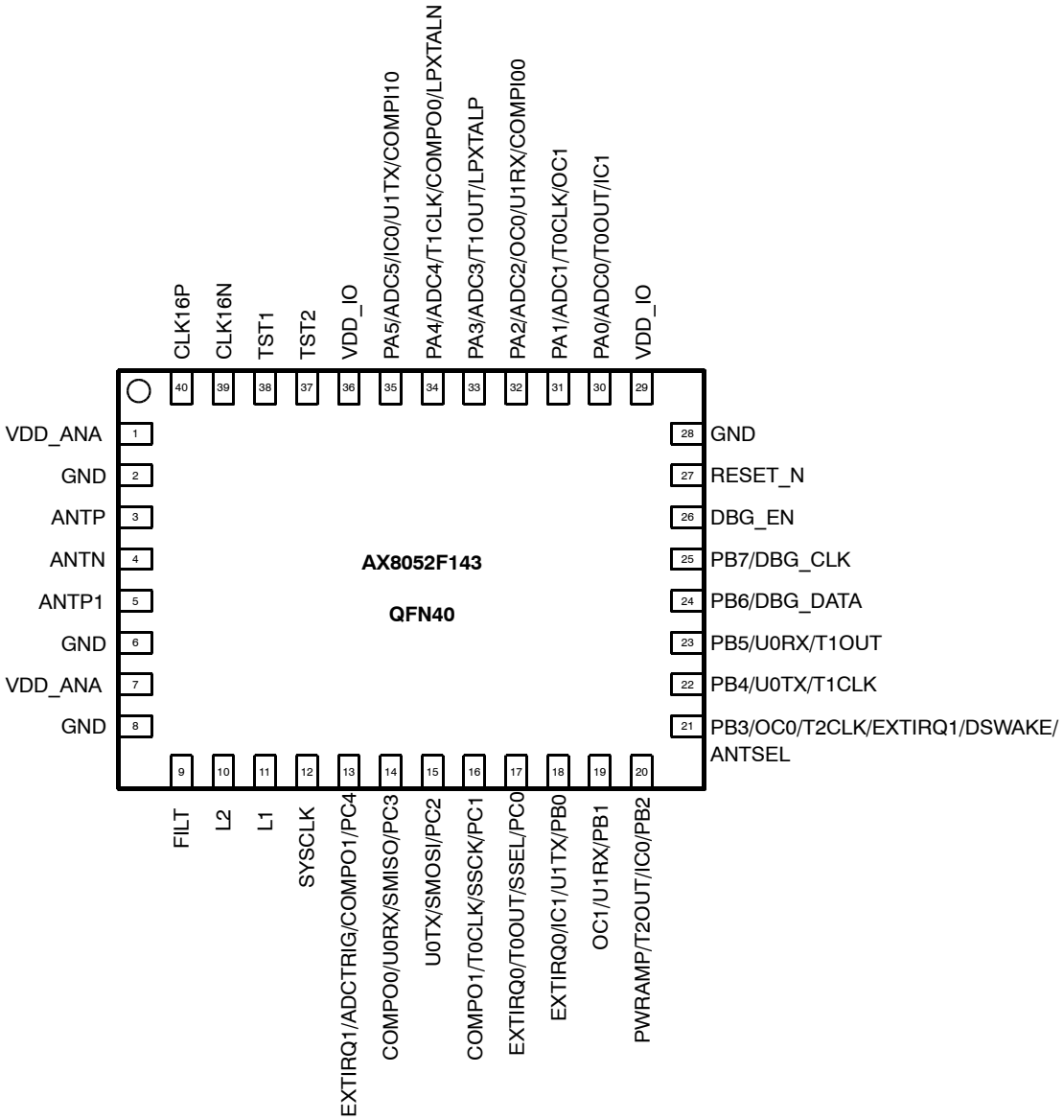

Figure 2. Pinout Drawing (Top View)

SPECIFICATIONS

Table 3. ABSOLUTE MAXIMUM RATINGS

Symbol	Description	Condition	Min	Max	Units
VDD_IO	Supply voltage		−0.5	5.5	V
IDD	Supply current			200	mA
P_{tot}	Total power consumption			800	mW
P_i	Absolute maximum input power at receiver input	ANTP and ANTN pins in RX mode		10	dBm
I_{I1}	DC current into any pin except ANTP, ANTN, ANTP1		−10	10	mA
I_{I2}	DC current into pins ANTP, ANTN, ANTP1		−100	100	mA
I_O	Output Current			40	mA
V_{ia}	Input voltage ANTP, ANTN, ANTP1 pins		−0.5	5.5	V
	Input voltage digital pins		−0.5	5.5	V
V_{es}	Electrostatic handling	HBM	−2000	2000	V
T_{amb}	Operating temperature		−40	85	°C
T_{stg}	Storage temperature		−65	150	°C
T_j	Junction Temperature			150	°C

Stresses exceeding those listed in the Maximum Ratings table may damage the device. If any of these limits are exceeded, device functionality should not be assumed, damage may occur and reliability may be affected.

1. Exposure to absolute maximum rating conditions for extended periods may affect device reliability.

DC Characteristics

Table 4. SUPPLIES

Sym	Description	Condition	Min	Typ	Max	Units
T_{AMB}	Operational ambient temperature		−40	27	85	°C
VDD_{IO}	I/O and voltage regulator supply voltage		1.8	3.0	3.6	V
VDD_{IO_R1}	I/O voltage ramp for reset activation; Note 1	Ramp starts at VDD_IO ≤ 0.1 V	0.1			V/ms
VDD_{IO_R2}	I/O voltage ramp for reset activation; Note 1	Ramp starts at 0.1 V < VDD_IO < 0.7 V	3.3			V/ms
V_{BOUT}	Brown−out threshold	Note 2		1.3		V
I_{DS}	Deep Sleep current			100		nA
I_{SL256P}	Sleep current, 256 Bytes RAM retained	Wakeup from dedicated pin		500		nA
I_{SL256}	Sleep current, 256 Bytes RAM retained	Wakeup Timer running at 640 Hz		900		nA
I_{SL4K}	Sleep current, 4.25 kBytes RAM retained	Wakeup Timer running at 640 Hz		1.5		μA
I_{SL8K}	Sleep current, 8.25 kBytes RAM retained	Wakeup Timer running at 640 Hz		2.2		μA
I_{RX}	Current consumption RX RF frequency generation subsystem: Internal VCO and internal loop−fiter	868 MHz, datarate 6 kbps		9.5		mA
		169 MHz, datarate 6 kbps		6.5		
		868 MHz, datarate 100 kbps		11		
		169 MHz, datarate 100 kbps		7.5		
$I_{TX-DIFF}$	Current consumption TX differential	868 MHz, 16 dBm, FSK, Note 3 RF frequency generation subsystem: Internal VCO and internal loop−filter Antenna configuration: Differential PA, internal RX/TX switch		48		mA

1. If VDD_IO ramps cannot be guaranteed, an external reset circuit is recommended, see the AX8052 Application Note: Power On Reset
2. Digital circuitry is functional down to typically 1 V.
3. Measured with optimized matching networks.

Table 4. SUPPLIES

Sym	Description	Condition	Min	Typ	Max	Units
I_{RX-SE}	Current consumption TX single ended	868 MHz, 0 dBm, FSK, Note 3 RF frequency generation subsystem: Internal VCO and internal loop−filter Antenna configuration: Single ended PA, external RX/TX switching		7.5		mA
I_{MCU}	Microcontroller running power consumption	All peripherals disabled		150		μA/MHz
I_{VSUP}	Voltage supervisor	Run and standby mode		85		μA
I_{LPXTAL}	Crystal oscillator current (RF reference oscillator)	16 MHz		160		μA
I_{LFXTAL}	Low frequency crystal oscillator current	32 kHz		700		nA
I_{RCOSC}	Internal oscillator current	20 MHz		210		μA
I_{LPOSC}	Internal Low Power Oscillator current	10 kHz		650		nA
		640 Hz		210		nA
I_{ADC}	ADC current	311 kSample/s, DMA 5 MHz		1.1		mA
I_{WOR}	Typical wake−on−radio duty cycle current	1s, 100 kbps		6		μA

1. If VDD_IO ramps cannot be guaranteed, an external reset circuit is recommended, see the AX8052 Application Note: Power On Reset
2. Digital circuitry is functional down to typically 1 V.
3. Measured with optimized matching networks.

For information on current consumption in complex modes of operation tailored to your application, see the software AX−RadioLab.

Note on current consumption in TX mode

To achieve best output power the matching network has to be optimized for the desired output power and frequency. As a rule of thumb a good matching network produces about 50% efficiency with the AX8052F143 power amplifier although over 90% are theoretically possible. A typical matching network has between 1 dB and 2 dB loss (P_{loss}). The theoretical efficiencies are the same for the single ended PA (ANTP1) and differential PA (ANTP and ANTN) therefore only one current value is shown in the table below. We recommend to use the single ended PA for low output power and the differential PA for high power. The differential PA is internally multiplexed with the LNA on pins ANTP and ANTN. Therefore constraints for the RX matching have to be considered for the differential PA matching.

The current consumption can be calculated as

$$I_{TX}[mA] = \frac{1}{PA_{efficiency}} \times 10^{\frac{P_{out}[dBm] + P_{loss}[dB]}{10}} \div 1.8V + I_{offset}$$

I_{offset} is about 6 mA for the fully integrated VCO at 400 MHz to 1050 MHz, and 3 mA for the VCO with external inductor at 169 MHz. The following table shows calculated current consumptions versus output power for P_{loss} = 1 dB, $PA_{efficiency}$ = 0.5, I_{offset}= 6 mA at 868 MHz and I_{offset}= 3.5 mA at 169 MHz.

Table 5. CURRENT CONSUMPTION VS. OUTPUT POWER

Pout [dBm]	I_{txcalc} [mA]	
	868 MHz	169 MHz
0	7.5	4.5
1	7.9	4.9
2	8.4	5.4
3	9.0	6.0
4	9.8	6.8
5	10.8	7.8
6	12.1	9.1
7	13.7	10.7
8	15.7	12.7
9	18.2	15.2
10	21.3	18.3
11	25.3	22.3
12	30.3	27.3
13	36.7	33.7
14	44.6	41.6
15	54.6	51.6

Both AX8052F143 power amplifiers run from the regulated VDD_ANA supply and not directly from the battery. This has the advantage that the current and output power do not vary much over supply voltage and temperature.

Table 6. LOGIC

Symbol	Description	Condition	Min	Typ	Max	Units
Digital Inputs						
V_{T+}	Schmitt trigger low to high threshold point	VDD_IO = 3.3 V		1.55		V
V_{T-}	Schmitt trigger high to low threshold point			1.25		V
V_{IL}	Input voltage, low				0.8	V
V_{IH}	Input voltage, high		2.0			V
V_{IPA}	Input voltage range, Port A		−0.5		VDD_IO	V
V_{IPBC}	Input voltage range, Ports B, C		−0.5		5.5	V
I_L	Input leakage current		−10		10	μA
R_{PU}	Programmable Pull−Up Resistance			65		kΩ
Digital Outputs						
I_{OH}	Output Current, high Ports PA, PB and PC	V_{OH} = 2.4 V	8			mA
I_{OL}	Output Current, low Ports PA, PB and PC	V_{OL} = 0.4 V	8			mA
I_{OH}	Output Current, high Pin SYSCLK	V_{OH} = 2.4 V	4			mA
I_{OL}	Output Current, low Pin SYSCLK	V_{OL} = 0.4 V	4			mA
I_{OZ}	Tri−state output leakage current		−10		10	μA

AC Characteristics

Table 7. CRYSTAL OSCILLATOR (RF REFERENCE OSCILLATOR)

Symbol	Description	Condition	Min	Typ	Max	Units
f_{XTAL}	Crystal or frequency	Note 1, 2, 3	10	16	50	MHz
gm_{osc}	Oscillator transconductance range	Self−regulated see note 4	0.2		20	mS
C_{osc}	Programmable tuning capacitors at pins CLK16N and CLK16P	AX5043_XTALCAP = 0x00 default		3		pF
		AX5043_XTALCAP = 0x01		8.5		pF
		AX5043_XTALCAP = 0xFF		40		pF
$C_{osc-lsb}$	Programmable tuning capacitors, increment per LSB of AX5043_XTALCAP	AX5043_XTALCAP = 0x01 − 0xFF		0.5		pF
f_{ext}	External clock input (TCXO)	Note 2, 3, 5	10	16	50	MHz
RIN_{osc}	Input DC impedance		10			kΩ
$NDIV_{SYSCLK}$	Divider ratio $f_{SYSCLK} = F_{XTAL}/ NDIV_{SYSCLK}$		2^0	2^4	2^{10}	

1. Tolerances and start−up times depend on the crystal used. Depending on the RF frequency and channel spacing the IC must be calibrated to the exact crystal frequency using the readings of the register AX5043_TRKFREQ.
2. The choice of crystal oscillator or TCXO frequency depends on the targeted regulatory regime for TX, see separate documentation on meeting regulatory requirements.
3. To avoid spurious emission, the crystal or TCXO reference frequency should be chosen so that the RF carrier frequency is not an integer multiple of the crystal or TCXO frequency.
4. The oscillator transconductance is regulated for fastest start−up time during start−up and for lowest power curing steady state oscillation. This means that values depend on the crystal used.
5. If an external clock or TCXO is used, it should be input via an AC coupling at pin CLK16P with the oscillator powered up and AX5043_XTALCAP = 000000. For detailed TCXO network recommendations depending on the TCXO output swing refer to the AX5043 Application Note: Use with a TCXO Reference Clock.

Table 8. LOW−POWER OSCILLATOR (TRANSCEIVER WAKE ON RADIO CLOCK)

Symbol	Description	Condition	Min	Typ	Max	Units
$f_{osc-slow}$	Oscillator frequency slow mode LPOSC FAST = 0 in AX5043_LPOSCCONFIG register	No calibration	480	640	800	Hz
		Internal calibration vs. crystal clock has been performed	630	640	650	
$f_{osc-fast}$	Oscillator frequency fast mode LPOSC FAST = 1 in AX5043_LPOSCCONFIG register	No calibration	7.6	10.2	12.8	kHz
		Internal calibration vs. crystal clock has been performed	9.8	10.2	10.8	

Table 9. RF FREQUENCY GENERATION SUBSYSTEM (SYNTHESIZER)

Symbol	Description	Condition	Min	Typ	Max	Units
f_{REF}	Reference frequency	The reference frequency must be chosen so that the RF carrier frequency is not an integer multiple of the reference frequency	10	16	50	MHz
Dividers						
$NDIV_{ref}$	Reference divider ratio range	Controlled directly with bits REFDIV in register AX5043_PLLVCODIV	2^0		2^3	
$NDIV_m$	Main divider ratio range	Controlled indirectly with register AX5043_FREQ	4.5		66.5	
$NDIV_{RF}$	RF divider range	Controlled directly with bit RFDIV in register AX5043_ PLLVCODIV	1		2	
Charge Pump						
I_{CP}	Charge pump current	Programmable in increments of 8.5 μA via register AX5043_PLLCPI	8.5		2168	μA
Internal VCO (VCOSEL = 0)						
f_{RF}	RF frequency range	RFDIV = 1	400		525	MHz
		RFDIV = 0	800		1050	
f_{step}	RF frequency step	RFDIV = 1 f_{REF} = 16.000000 MHz		0.98		Hz
BW	Synthesizer loop bandwidth	The synthesizer loop bandwidth an start−up time can be programmed with the registers AX5043_PLLLOOP and AX5043_PLLCPI. For recommendations see the AX5043 Programming Manual, the AX−RadioLab software and AX5043 Application Notes on compliance with regulatory regimes.	50		500	kHz
T_{start}	Synthesizer start−up time if crystal oscillator and reference are running		5		25	μs
PN868	Synthesizer phase noise 868 MHz f_{REF} = 48 MHz	10 kHz from carrier		−95		dBc/Hz
		1 MHz from carrier		−120		
PN433	Synthesizer phase noise 433 MHz f_{REF} = 48 MHz	10 kHz from carrier		−105		dBc/Hz
		1 MHz from carrier		−120		
VCO with external inductors (VCOSEL = 1, VCO2INT = 1)						
f_{RFrng_lo}	RF frequency range For choice of L_{ext} values as well as VCO gains see Figure 3 and Figure 4	RFDIV = 1	27		262	MHz
f_{RFrng_hi}		RFDIV = 0	54		525	
PN169	Synthesizer phase noise 169 MHz L_{ext}=47 nH (wire wound 0603) AX5043_RFDIV = 0, f_{REF}= 16 MHz Note: phase noises can be improved with higher f_{REF}	10 kHz from carrier		−97		dBc/Hz
		1 MHz from carrier		−115		

Table 9. RF FREQUENCY GENERATION SUBSYSTEM (SYNTHESIZER)

Symbol	Description	Condition	Min	Typ	Max	Units
External VCO (VCOSEL = 1, VCO2INT = 0)						
f_{RF}	RF frequency range fully external VCO	Note: The external VCO frequency needs to be 2 x f_{RF}	27		1000	MHz
V_{amp}	Differential input amplitude at L1, L2 terminals			0.7		V
V_{inL}	Input voltage levels at L1, L2 terminals		0		1.8	V
V_{ctrl}	Control voltage range	Available at FILT in external loop filter mode	0		1.8	V

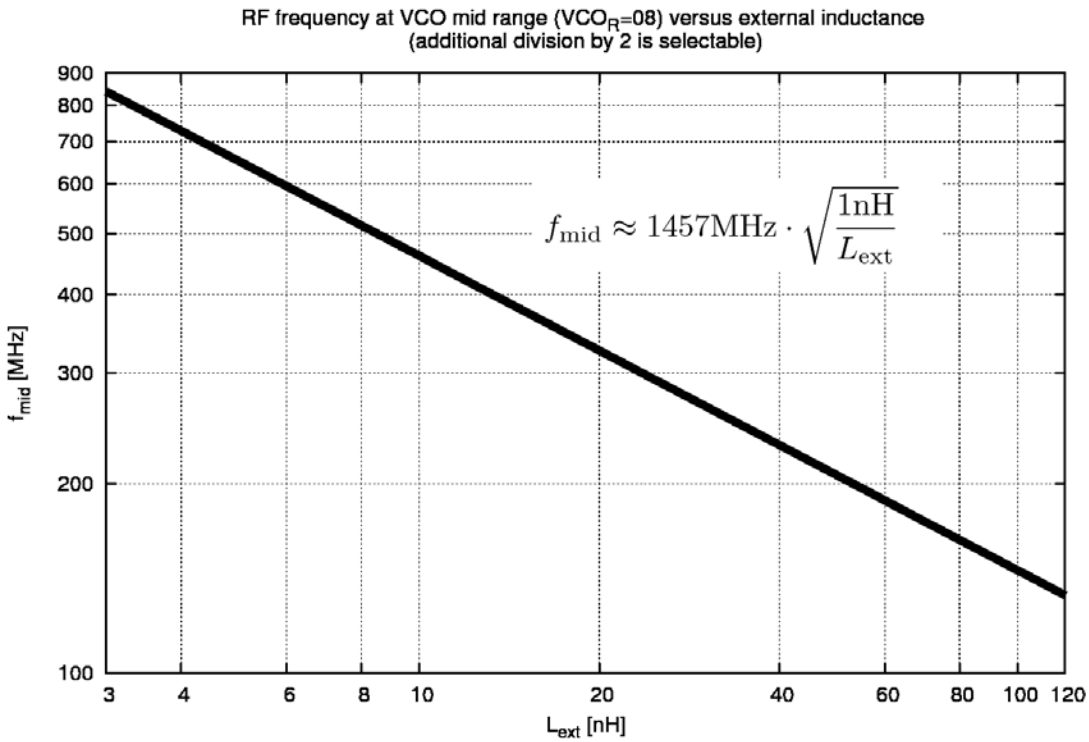

Figure 3. VCO with External Inductors: Typical Frequency vs. L_{ext}

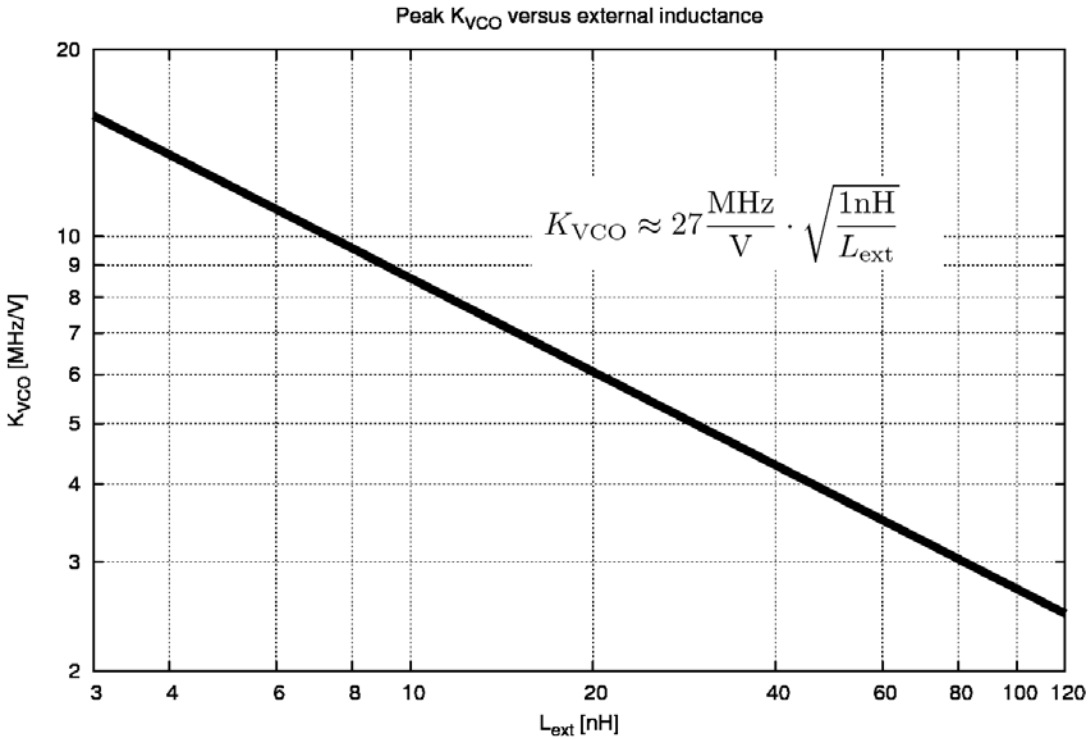

Figure 4. VCO with External Inductors: Typical K_{VCO} vs. L_{ext}

The following table shows the typical frequency ranges for frequency synthesis with external VCO inductor for different inductor values.

Table 10.

Lext [nH]	Freq [MHz] RFDIV = 0	Freq [MHz] RFDIV = 1	PLL Range
8.2	482	241	0
8.2	437	219	15
10	432	216	0
10	390	195	15
12	415	208	0
12	377	189	15
15	380	190	0
15	345	173	15
18	345	173	0
18	313	157	15
22	308	154	0
22	280	140	14
27	285	143	0
27	258	129	15
33	260	130	0
33	235	118	15
39	245	123	0
39	223	112	14
47	212	106	0
47	194	97	14
56	201	101	0
56	182	91	15
68	178	89	0
68	161	81	15
82	160	80	1
82	146	73	14
100	149	75	1
100	136	68	14
120	136	68	0
120	124	62	14

For tuning or changing of ranges a capacitor can be added in parallel to the inductor.

Table 11. TRANSMITTER

Symbol	Description	Condition	Min	Typ	Max	Units
SBR	Signal bit rate		0.1		125	kbps
PTX	Transmitter power @ 868 MHz	Differential PA, 50 Ω single ended measurement at an SMA connector behind the matching network, Note 2	−10		16	dBm
	Transmitter power @ 433 MHz		−10		16	
	Transmitter power @ 169 MHz		−10		16	
PTX_{step}	Programming step size output power	Note 1			0.5	dB
dTX_{temp}	Transmitter power variation vs. temperature	−40°C to +85°C Note 2		± 0.5		dB
dTX_{Vdd}	Transmitter power variation vs. VDD_IO	1.8 to 3.6 V Note 2		± 0.5		dB
Padj	Adjacent channel power GFSK BT = 0.5, 500 Hz deviation, 1.2 kbps, 25 kHz channel spacing, 10 kHz channel BW	868 MHz		−44		dBc
		433 MHz		−51		
$PTX_{868-harm2}$	Emission @ 2nd harmonic	868 MHz, Note 2		−40		dBc
$PTX_{868-harm3}$	Emission @ 3rd harmonic			−60		
$PTX_{433-harm2}$	Emission @ 2nd harmonic	433 MHz, Note 2		−40		dBc
$PTX_{433-harm3}$	Emission @ 3rd harmonic			−40		

1. $P_{out} = \frac{AX5043_TXPWRCOEFFB}{2^{12}-1} \times P_{max}$
2. 50 Ω single ended measurements at an SMA connector behind the matching network. For recommended matching networks see Applications section.

Table 12. RECEIVER SENSITIVITIES

The table lists typical input sensitivities (without FEC) in dBm at the SMA connector with the complete matching network for BER=10^{-3} at 433 or 868 MHz.

Data rate [kbps]		FSK h = 0.66	FSK h = 1	FSK h = 2	FSK h = 4	FSK h = 5	FSK h = 8	FSK h = 16	PSK
0.1	Sensitivity [dBm]	−135	−134.5	−132.5	−133	−133.5	−133	−132.5	−138
	RX Bandwidth [kHz]	0.2	0.2	0.3	0.5	0.6	0.9	2.1	0.2
	Deviation [kHz]	0.033	0.05	0.1	0.2	0.25	0.4	0.8	
1	Sensitivity [dBm]	−126	−125	−123	−123.5	−124	−123.5	−122.5	−130
	RX Bandwidth [kHz]	1.5	2	3	6	7	11	21	1
	Deviation [kHz]	0.33	0.5	1	2	2.5	4	8	
10	Sensitivity [dBm]	−117	−116	−113	−114	−113.5	−113		−120
	RX Bandwidth [kHz]	15	20	30	50	60	110		10
	Deviation [kHz]	3.3	5	10	20	25	40		
100	Sensitivity [dBm]	−107	−105.5						−109
	RX Bandwidth [kHz]	150	200						100
	Deviation [kHz]	33	50						
125	Sensitivity [dBm]	−105	−104						−108
	RX Bandwidth [kHz]	187.5	200						125
	Deviation [kHz]	42.3	62.5						

1. Sensitivities are equivalent for 1010 data streams and PN9 whitened data streams.
2. RX bandwidths < 0.9 kHz cannot be achieved with an 48 MHz TCXO. A 16 MHz TCXO was used for all measurements at 0.1 kbps.

Table 13. RECEIVER

Symbol	Description	Condition	Min	Typ	Max	Units
SBR	Signal bit rate		0.1		125	kbps
IS_{BER868}	Input sensitivity at BER = 10^{-3} for 868 MHz operation, continuous data, without FEC	FSK, h = 0.5, 100 kbps		−106		dBm
		FSK, h = 0.5, 10 kbps		−116		
		FSK, 500 Hz deviation, 1.2 kbps		−126		
		PSK, 100 kbps		−109		
		PSK, 10 kbps		−120		
		PSK, 1 kbps		−130		
$IS_{BER868FEC}$	Input sensitivity at BER = 10^{-3}, for 868 MHz operation, continuous data, with FEC	FSK, h = 0.5, 50 kbps		−111		dBm
		FSK, h = 0.5, 5 kbps		−122		
		FSK, 0.1 kbps		−137		
IS_{PER868}	Input sensitivity at PER = 1%, for 868 MHz operation, 144 bit packet data, without FEC	FSK, h = 0.5, 100 kbps		−103		dBm
		FSK, h = 0.5, 10 kbps		−115		
		FSK, 500 Hz deviation, 1.2 kbps		−125		
IS_{WOR868}	Input sensitivity at PER = 1% for 868 MHz operation, WOR−mode, without FEC	FSK, h= 0.5, 100 kpbs		−102		dBm
IL	Maximum input level	Full selectivity		0		dBm
		FSK, reduced selectivity		10		
CP_{1dB}	Input referred compression point	2 tones separated by 100 kHz		−35		dBm
RSSIR	RSSI control range	FSK, 500 Hz deviation, 1.2 kbps	−126		−46	dB
$RSSIS_1$	RSSI step size	Before digital channel filter; calculated from register AX5043_AGCCOUNTER		0.625		dB
$RSSIS_2$	RSSI step size	Behind digital channel filter; calculated from registers AX5043_AGCCOUNTER, AX5043_TRKAMPL		0.1		dB
$RSSIS_3$	RSSI step size	Behind digital channel filter; reading register AX5043_RSSI		1		dB
SEL_{868}	Adjacent channel suppression	25 kHz channels , Note 1		45		dB
		100 kHz channels, Note 1		47		
BLK_{868}	Blocking at ± 10 MHz offset	Note 2		78		dB
R_{AFC}	AFC pull−in range	The AFC pull−in range can be programmed with the AX5043_MAXRFOFFSET registers. The AFC response time can be programmed with the AX5043_FREQGAIND register.	± 15			%
R_{DROFF}	Bitrate offset pull−in range	The bitrate pull−in range can be programmed with the AX5043_MAXDROFFSET registers.	± 10			%

1. Interferer/Channel @ BER = 10^{-3}, channel level is +3 dB above the typical sensitivity, the interfering signal is CW; channel signal is modulated with shaping
2. Channel/Blocker @ BER = 10^{-3}, channel level is +3 dB above the typical sensitivity, the blocker signal is CW; channel signal is modulated with shaping

Table 14. RECEIVER AND TRANSMITTER SETTLING PHASES

Symbol	Description	Condition	Min	Typ	Max	Units
T_{xtal}	XTAL settling time	Powermodes: POWERDOWN to STANDBY Note that T_{xtal} depends on the specific crystal used.		0.5		ms
T_{synth}	Synthesizer settling time	Powermodes: STANDBY to SYNTHTX or SYNTHRX		40		µs
T_{tx}	TX settling time	Powermodes: SYNTHTX to FULLTX T_{tx} is the time used for power ramping, this can be programmed to be 1 x t_{bit}, 2 x t_{bit}, 4 x t_{bit} or 8 x t_{bit}. Note 1	0	1 x t_{bit}	8 x t_{bit}	µs
T_{rx_init}	RX initialization time			150		µs
T_{rx_rssi}	RX RSSI acquisition time (after T_{rx_init})	Powermodes: SYNTHRX to FULLRX		80 + 3 x t_{bit}		µs
$T_{rx_preamble}$	RX signal acquisition time to valid data RX at full sensitivity/selectivity (after T_{rx_init})	Modulation (G)FSK Note 1		9 x t_{bit}		

1. t_{bit} depends on the datarate, e.g. for 10 kbps t_{bit} = 100 µs

Table 15. OVERALL STATE TRANSITION TIMES

Symbol	Description	Condition	Min	Typ	Max	Units
T_{tx_on}	TX startup time	Powermodes: STANDBY to FULLTX Note 1	40	40 + 1 x t_{bit}		µs
T_{rx_on}	RX startup time	Powermodes: STANDBY to FULLRX		190		µs
T_{rx_rssi}	RX startup time to valid RSSI	Powermodes: STANDBY to FULLRX		270 + 3 x t_{bit}		µs
T_{rx_data}	RX startup time to valid data at full sensitivity/selectivity	Modulation (G)FSK Note 1		190 + 9 x t_{bit}		µs
T_{rxtx}	RX to TX switching	Powermodes: FULLRX to FULLTX		62		µs
T_{txrx}	TX to RX switching (to preamble start)	Powermodes: FULLTX to FULLRX		200		
T_{hop}	Frequency hop	Switch between frequency defined in register AX5043_FREQA and AX5043_FREQB		30		µs

1. t_{bit} depends on the datarate, e.g. for 10 kbps t_{bit} = 100 µs

Table 16. LOW FREQUENCY CRYSTAL OSCILLATOR

Symbol	Description	Condition	Min	Typ	Max	Units
f_{LPXTAL}	Crystal frequency			32	150	kHz
gm_{lpxosc}	Transconductance oscillator	LPXOSCGM = 00110		3.5		μs
		LPXOSCGM = 01000		4.6		
		LPXOSCGM = 01100		6.9		
		LPXOSCGM = 10000		9.1		
RIN_{lpxosc}	Input DC impedance		10			MΩ

Table 17. INTERNAL LOW POWER OSCILLATOR

Symbol	Description	Condition	Min	Typ	Max	Units
f_{LPOSC}	Oscillation Frequency	LPOSCFAST = 0 Factory calibration applied. Over the full temperature and voltage range	630	640	650	Hz
		LPOSCFAST = 1 Factory calibration applied Over the full temperature and voltage range	10.08	10.24	10.39	kHz

Table 18. INTERNAL RC OSCILLATOR

Symbol	Description	Condition	Min	Typ	Max	Units
$f_{LFRCPOSC}$	Oscillation Frequency	Factory calibration applied. Over the full temperature and voltage range	19.8	20	20.2	MHz

Table 19. MICROCONTROLLER

Symbol	Description	Condition	Min	Typ	Max	Units
$T_{SYSCLKL}$	SYSCLK Low		27			ns
$T_{SYSCLKH}$	SYSCLK High		21			ns
$T_{SYSCLKP}$	SYSCLK Period		47			ns
T_{FLWR}	FLASH Write Time	2 Bytes		20		μs
T_{FLPE}	FLASH Page Erase	1 kBytes		2		ms
T_{FLE}	FLASH Secure Erase	64 kBytes		10		ms
T_{FLEND}	FLASH Endurance: Erase Cycles		10 000	100 000		Cycles
$T_{FLRETroom}$	FLASH Data Retention	25°C See Figure 5 for the lower limit set by the memory qualification	100			Years
$T_{FLREThot}$		85°C See Figure 5 for the lower limit set by the memory qualification	10			

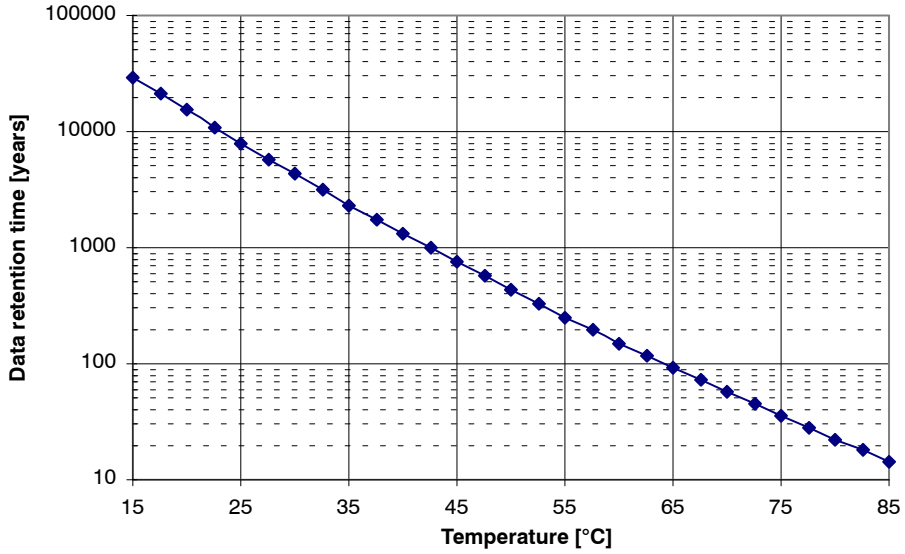

Figure 5. FLASH Memory Qualification Limit for Data Retention after 10k Erase Cycles

Table 20. ADC / COMPARATOR / TEMPERATURE SENSOR

Symbol	Description	Condition	Min	Typ	Max	Units
ADCSR	ADC sampling rate GPADC mode		30		500	kHz
ADCSR_T	ADC sampling rate temperature sensor mode		10	15.6	30	kHz
ADCRES	ADC resolution			10		Bits
V_{ADCREF}	ADC reference voltage & comparator internal reference voltage		0.95	1	1.05	V
Z_{ADC00}	Input capacitance				2.5	pF
DNL	Differential nonlinearity			± 1		LSB
INL	Integral nonlinearity			± 1		LSB
OFF	Offset			3		LSB
GAIN_ERR	Gain error			0.8		%
ADC in Differential Mode						
V_{ABS_DIFF}	Absolute voltages & common mode voltage in differential mode at each input		0		VDD_IO	V
V_{FS_DIFF01}	Full swing input for differential signals	Gain x1	−500		500	mV
V_{FS_DIFF10}		Gain x10	−50		50	mV
ADC in Single Ended Mode						
V_{MID_SE}	Mid code input voltage in single ended mode			0.5		V
V_{IN_SE00}	Input voltage in single ended mode		0		VDD_IO	V
V_{FS_SE01}	Full swing input for single ended signals	Gain x1	0		1	V
Comparators						
V_{COMP_ABS}	Comparator absolute input voltage		0		VDD_IO	V
V_{COMP_COM}	Comparator input common mode		0		VDD_IO − 0.8	V
$V_{COMPOFF}$	Comparator input offset voltage				20	mV
Temperature Sensor						
T_{RNG}	Temperature range		−40		85	°C
T_{RES}	Temperature resolution			0.1607		°C/LSB
T_{ERR_CAL}	Temperature error	Factory calibration applied	−2		2	°C

CIRCUIT DESCRIPTION

The AX8052F143 is a true single chip narrow−band, ultra−low power RF−microcontroller SoC for use in licensed and unlicensed bands ranging from 70 MHz to 1050 MHz. The on−chip transceiver consists of a fully integrated RF front−end with modulator and demodulator. Base band data processing is implemented in an advanced and flexible communication controller that enables user friendly communication.

The AX8052F143 contains a high speed microcontroller compatible to the industry standard 8052 instruction set. It contains 64 kBytes of FLASH and 8.25 kBytes of internal SRAM.

The AX8052F143 features 3 16−bit general purpose timers with ΣΔ capability, 2 output compare units for generating PWM signals, 2 input compare units to record timings of external signals, 2 16−bit wakeup timers, a watchdog timer, 2 UARTs, a Master/Slave SPI controller, a 10−bit 500 kSample/s A/D converter, 2 analog comparators, a temperature sensor, a 2 channel DMA controller, and a dedicated AES crypto controller. Debugging is aided by a dedicated hardware debug interface controller that connects using a 3−wire protocol (1 dedicated wire, 2 shared with GPIO) to the PC hosting the debug software.

While the radio carrier/LO synthesizer can only be clocked by the crystal oscillator (carrier stability requirements dictate a high stability reference clock in the MHz range), the microcontroller and its peripherals provide extremely flexible clocking options. The system clock that clocks the microcontroller, as well as peripheral clocks, can be selected from one of the following clock sources: the crystal oscillator, an internal high speed 20MHz oscillator, an internal low speed 640 Hz/10 kHz oscillator, or the low frequency crystal oscillator. Prescalers offer additional flexibility with their programmable divide by a power of two capability. To improve the accuracy of the internal oscillators, both oscillators may be slaved to the crystal oscillator.

AX8052F143 can be operated from a 1.8 V to 3.6 V power supply over a temperature range of –40°C to 85°C, it consumes 4 – 51 mA for transmitting, depending on the output power, 6.8 – 11 mA for receiving.

The AX8052F143 features make it an ideal interface for integration into various battery powered solutions such as ticketing or as transceiver for telemetric applications e.g. in sensors. As primary application, the transceiver is intended for UHF radio equipment in accordance with the European Telecommunication Standard Institute (ETSI) specification EN 300 220−1 and the US Federal Communications Commission (FCC) standard Title 47 CFR part 15 as well as Part 90. Additionally AX8052F143 is suited for systems targeting compliance with Wireless M−Bus standard EN 13757−4:2005. Wireless M−Bus frame support (S, T, R) is built−in.

The AX8052F143 sends and receives data in frames. This standard operation mode is called Frame Mode. Pre and post ambles as well as checksums can be generated automatically.

AX8052F143 supports any data rate from 0.1 kbps to 125 kbps for FSK, MSK, 4−FSK, GFSK, GMSK and ASK modulations. To achieve optimum performance for specific data rates and modulation schemes several register settings to configure the AX8052F143 are necessary, they are outlined in the following, for details see the AXSEM RadioLab software which calculates the necessary register settings and the AX5043 Programming Manual.

The receiver supports multi−channel operation for all data rates and modulation schemes.

Microcontroller

The AX8052 microcontroller core executes the industry standard 8052 instruction set. Unlike the original 8052, many instructions are executed in a single cycle. The system clock and thus the instruction rate can be programmed freely from DC to 20 MHz.

Memory Architecture

The AX8052F143 Microcontroller features the highest bandwidth memory architecture of its class. Figure 6 shows the memory architecture. Three bus masters may initiate bus cycles:

- The AX8052 Microcontroller Core
- The Direct Memory Access (DMA) Engine
- The Advanced Encryption Standard (AES) Engine

Bus targets include:

- Two individual 4 kBytes RAM blocks located in X address space, which can be simultaneously accessed and individually shut down or retained during sleep mode
- A 256 Byte RAM located in internal address space, which is always retained during sleep mode
- A 64 kBytes FLASH memory located in code space.
- Special Function Registers (SFR) located in internal address space accessible using direct address mode instructions
- Additional Registers located in X address space (X Registers)

The upper half of the FLASH memory may also be accessed through the X address space. This simplifies and makes the software more efficient by reducing the need for generic pointers.

NOTE: Generic pointers include, in addition to the address, an address space tag.

SFR Registers are also accessible through X address space, enabling indirect access to SFR registers. This allows driver code for multiple identical peripherals (such as UARTs or Timers) to be shared.

The 4 word × 16 bit fully associative cache and a pre−fetch controller hide the latency of the FLASH.

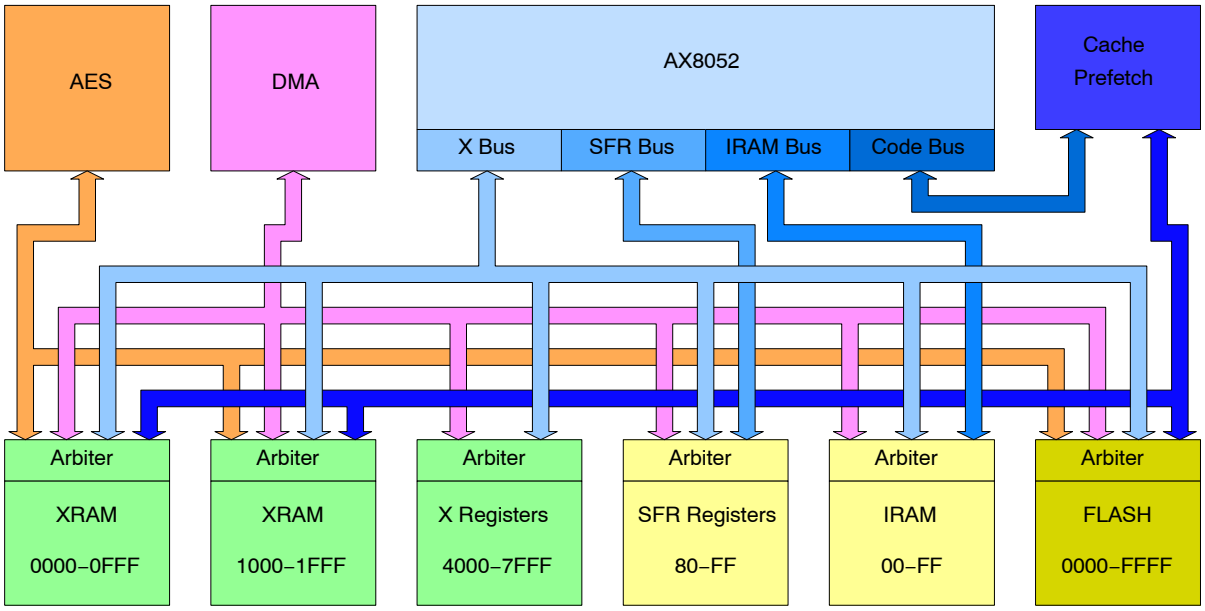

Figure 6. AX8052 Memory Architecture

The AX8052 Memory Architecture is fully parallel. All bus masters may simultaneously access different bus targets during each system clock cycle. Each bus target includes an arbiter that resolves access conflicts. Each arbiter ensures that no bus master can be starved.

Both 4 kBytes RAM blocks may be individually retained or switched off during sleep mode. The 256 Byte RAM is always retained during sleep mode.

The AES engine accesses memory 16 bits at a time. It is therefore slightly faster to align its buffers on even addresses.

Memory Map

The AX8052, like the other industry standard 8052 compatible microcontrollers, uses a Harvard architecture. Multiple address spaces are used to access code and data. Figure 7 shows the AX8052 memory map.

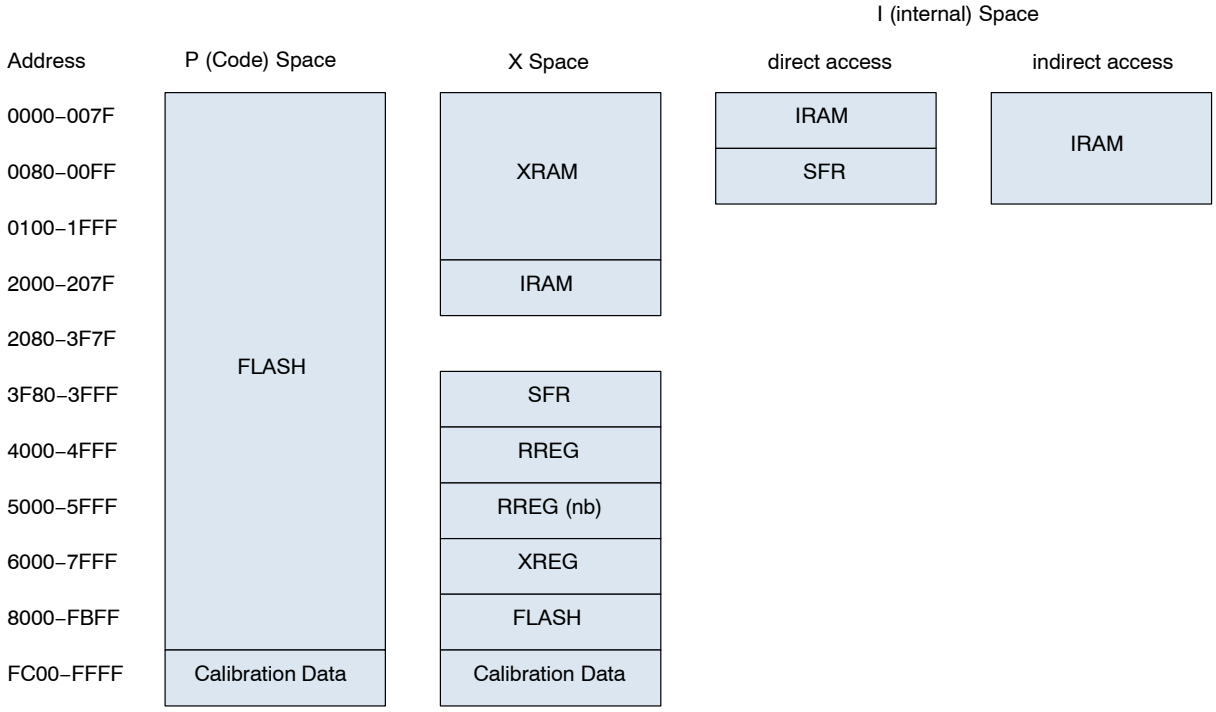

Figure 7. AX8052 Memory Architecture

The AX8052 uses P or Code Space to access its program. Code space may also be read using the MOVC instruction.

Smaller amounts of data can be placed in the Internal (see Note) or Data Space. A distinction is made in the upper half of the Data Space between direct accesses (MOV reg,addr; MOV addr,reg) and indirect accesses (MOV reg,@Ri; MOV @Ri,reg; PUSH; POP); Direct accesses are routed to the Special Function Registers, while indirect accesses are routed to the internal RAM.

NOTE: The origin of Internal versus External (X) Space is historical. External Space used to be outside of the chip on the original 8052 Microcontrollers.

Large amounts of data can be placed in the External or X Space. It can be accessed using the MOVX instructions. Special Function Registers, as well as additional Microcontroller Registers (XREG) and the Radio Registers (RREG) are also mapped into the X Space.

Detailed documentation of the Special Function Registers (SFR) and additional Microcontroller Registers can be found in the AX8052 Programming Manual.

The Radio Registers are documented in the AX5043 Programming Manual. Register Addresses given in the AX5043 Programming Manual are relative to the beginning of RREG, i.e. 0x4000 must be added to these addresses. It is recommended that the AXSEM provided ax8052f143.h header file is used; Radio Registers are prefixed with AX5043_ in the ax8052f143.h header file to avoid clashes of same−name Radio Registers with AX8052 registers.

Normally, accessing Radio Registers through the RREG address range is adequate. Since Radio Register accesses have a higher latency than other AX8052 registers, the AX8052 provides a method for non−blocking access to the Radio Registers. Accessing the RREG (nb) address range initiates a Radio Register access, but does not wait for its completion. The details of mechanism is documented in the Radio Interface section of the AX8052 Programming Manual.

The FLASH memory is organized as 64 pages of 1 kBytes each. Each page can be individually erased. The write word size is 16 Bits. The last 1 kByte page is dedicated to factory calibration data and should not be overwritten.

Power Management

The microcontroller power mode can be selected independently from the transceiver. The microcontroller supports the following power modes:

Table 21. POWER MANAGEMENT

PCON register	Name	Description
00	RUNNING	The microcontroller and all peripherals are running. Current consumption depends on the system clock frequency and the enabled peripherals and their clock frequency.
01	STANDBY	The microcontroller is stopped. All register and memory contents are retained. All peripherals continue to function normally. Current consumption is determined by the enabled peripherals. STANDBY is exited when any of the enabled interrupts become active.
10	SLEEP	The microcontroller and its peripherals, except GPIO and the system controller, are shut down. Their register settings are lost. The internal RAM is retained. The external RAM is split into two 4 kByte blocks. Software can determine individually for both blocks whether contents of that block are to be retained or lost. SLEEP can be exited by any of the enabled GPIO or system controller interrupts. For most applications this will be a GPIO or wakeup timer interrupt.
11	DEEPSLEEP	The microcontroller, all peripherals and the transceiver are shut down. Only 4 bytes of scratch RAM are retained. DEEPSLEEP can only be exited by tying the PB3 pin low.

Clocking

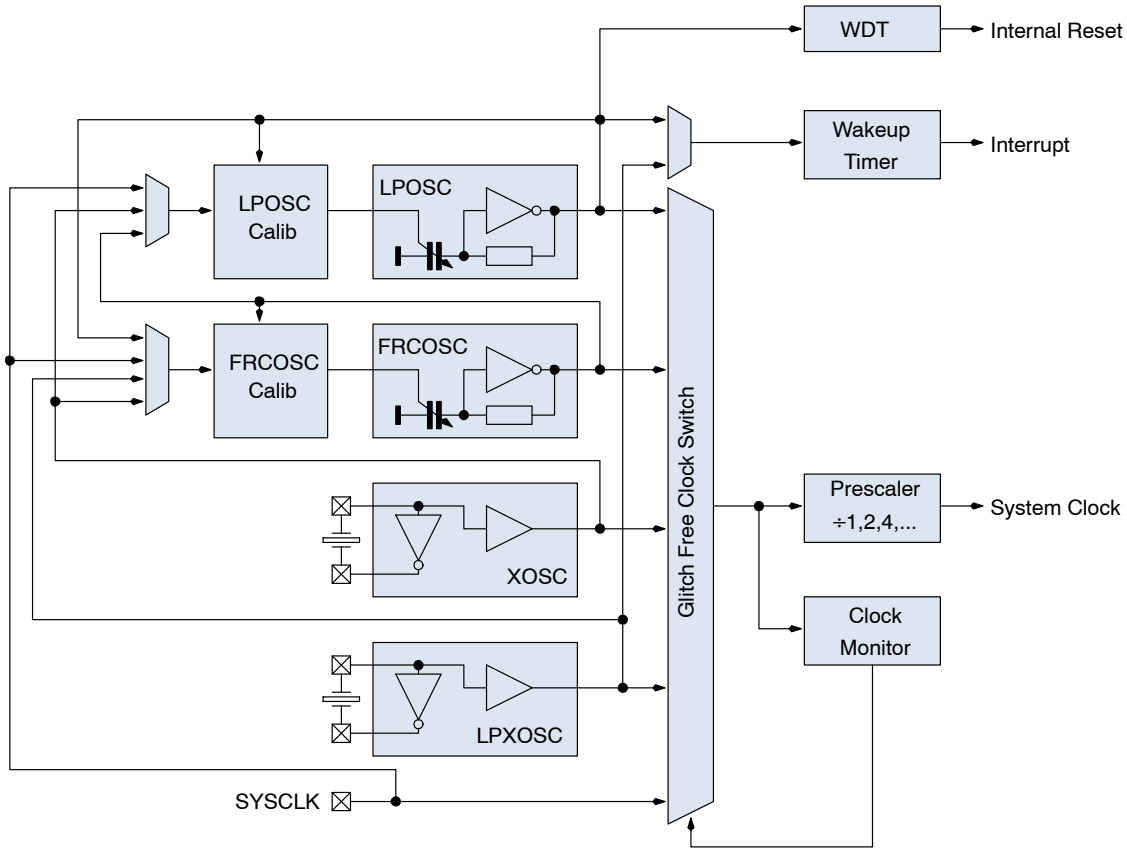

Figure 8. Clock System Diagram

The system clock can be derived from any of the following clock sources:

- The crystal oscillator (RF reference oscillator, typically 16 MHz, via SYSCLK)
- The low speed crystal oscillator (typical 32 kHz tuning fork)
- The internal high speed RC (20 MHz) oscillator
- The internal low power (640 Hz/10 kHz) oscillator

An additional pre−scaler allows the selected oscillator to be divided by a power of two. After reset, the microcontroller starts with the internal high speed RC oscillator selected and divided by two. I.e. at start−up, the microcontroller runs with 10 MHz ± 10%. Clocks may be switched any time by writing to the CLKCON register. In order to prevent clock glitches, the switching takes approximately $2\cdot(T_1+T_2)$, where T_1 and T_2 are the periods of the old and the new clock. Switching may take longer if the new oscillator first has to start up. Internal oscillators start up instantaneously, but crystal oscillators may take a considerable amount of time to start the oscillation. CLKSTAT can be read to determine the clock switching status.

A programmable clock monitor resets the CLKCON register when no system clock transitions are found during a programmable time interval, thus reverts to the internal RC oscillator.

Both internal oscillators can be slaved to one of the crystal oscillators to increase the accuracy of the oscillation frequency. While the reference oscillator runs, the internal oscillator is slaved to the reference frequency by a digital frequency locked loop. When the reference oscillator is switched off, the internal oscillator continues to run unslaved with the last frequency setting.

Reset and Interrupts

After reset, the microcontroller starts executing at address 0x0000. Several events can lead to resetting the microcontroller core:

- POR or hardware RESET_N pin activated and released
- Leaving SLEEP or DEEPSLEEP mode
- Watchdog Reset
- Software Reset

The reset cause can be determined by reading the PCON register.

The microcontroller supports 22 interrupt sources. Each interrupt can be individually enabled and can be programmed to have one of two possible priorities. The interrupt vectors are located at 0x0003, 0x000B,…, 0x00AB.

Debugging

A hardware debug unit considerably eases debugging compared to other 8052 microcontrollers. It allows to reliably stop the microcontroller at breakpoints even if the stack is smashed. The debug unit communicates with the host PC running the debugger using a 3 wire interface. One wire is dedicated (DBG_EN), while two wires are shared with GPIO pins (PB6, PB7). When DBG_EN is driven high, PB6 and PB7 convert to debug interface pins and the GPIO functionality is no longer available. A pin emulation feature however allows bits PINB[7:6] to be set and PORTB[7:6] and DIRB[7:6] to be read by the debugger software. This allows for example switches or LEDs connected to the PB6, PB7 pins to be emulated in the debugger software whenever the debugger is active.

In order to protect the intellectual property of the firmware developer, the debug interface can be locked using a developer−selectable 64−bit key. The debug interface is then disabled and can only be enabled with the knowledge of this 64−bit key. Therefore, unauthorized persons cannot read the firmware through the debug interface, but debugging is still possible for authorized persons. Secure erase can be initiated without key knowledge; secure erase ensures that the main FLASH array is completely erased before erasing the key, reverting the chip into factory state.

The DebugLink peripheral looks like an UART to the microcontroller, and allows exchange of data between the microcontroller and the host PC without disrupting program execution.

Timer, Output Compare and Input Capture

The AX8052F143 features three general purpose 16−bit timers. Each timer can be clocked by the system clock, any of the available oscillators, or a dedicated input pin. The timers also feature a programmable clock inversion, a programmable prescaler that can divide by powers of two, and an optional clock synchronization logic that synchronizes the clock to the system clock. All three counters are identical and feature four different counting modes, as well as a ΣΔ mode that can be used to output an analog value on a dedicated digital pin only employing a simple RC lowpass filter.

Two output compare units work in conjunction with one of the timers to generate PWM signals.

Two input capture units work in conjunction with one of the timers to measure transitions on an input signal.

For software timekeeping, two additional 16−bit wakeup timers with 4 16−bit event registers are provided, generating an interrupt on match events.

UART

The AX8052F143 features two universal asynchronous receiver transmitters. They use one of the timers as baud rate generator. Word length can be programmed from 5 to 9 bits.

SPI Master/Slave Controller

The AX8052F143 features a master/slave SPI controller. Both 3 and 4 wire SPI variants are supported. In master mode, any of the on−chip oscillators or the system clock may be selected as clock source. An additional prescaler with divide by two capability provides additional clocking flexibility. Shift direction, as well as clock phase and inversion, are programmable.

ADC, Analog Comparators and Temperature Sensor

The AX8052F143 features a 10−bit, 500 kSample/s Analog to Digital converter. Figure 9 shows the block diagram of the ADC. The ADC supports both single ended and differential measurements. It uses an internal reference of 1 V. ×1, ×10 and ×0.1 gain modes are provided. The ADC may digitize signals on PA0…PA7, as well as VDD_IO and an internal temperature sensor. The user can define four channels which are then converted sequentially and stored in four separate result registers. Each channel configuration consists of the multiplexer and the gain setting.

The AX8052F143 contains an on−chip temperature sensor. Built−in calibration logic allows the temperature sensor to be calibrated in °C, °F or any other user defined temperature scale.

The AX8052F143 also features two analog comparators. Each comparator can either compare two voltages on dedicated PA pins, or one voltage against the internal 1 V reference. The comparator output can be routed to a dedicated digital output pin or can be read by software. The comparators are clocked with the system clock.

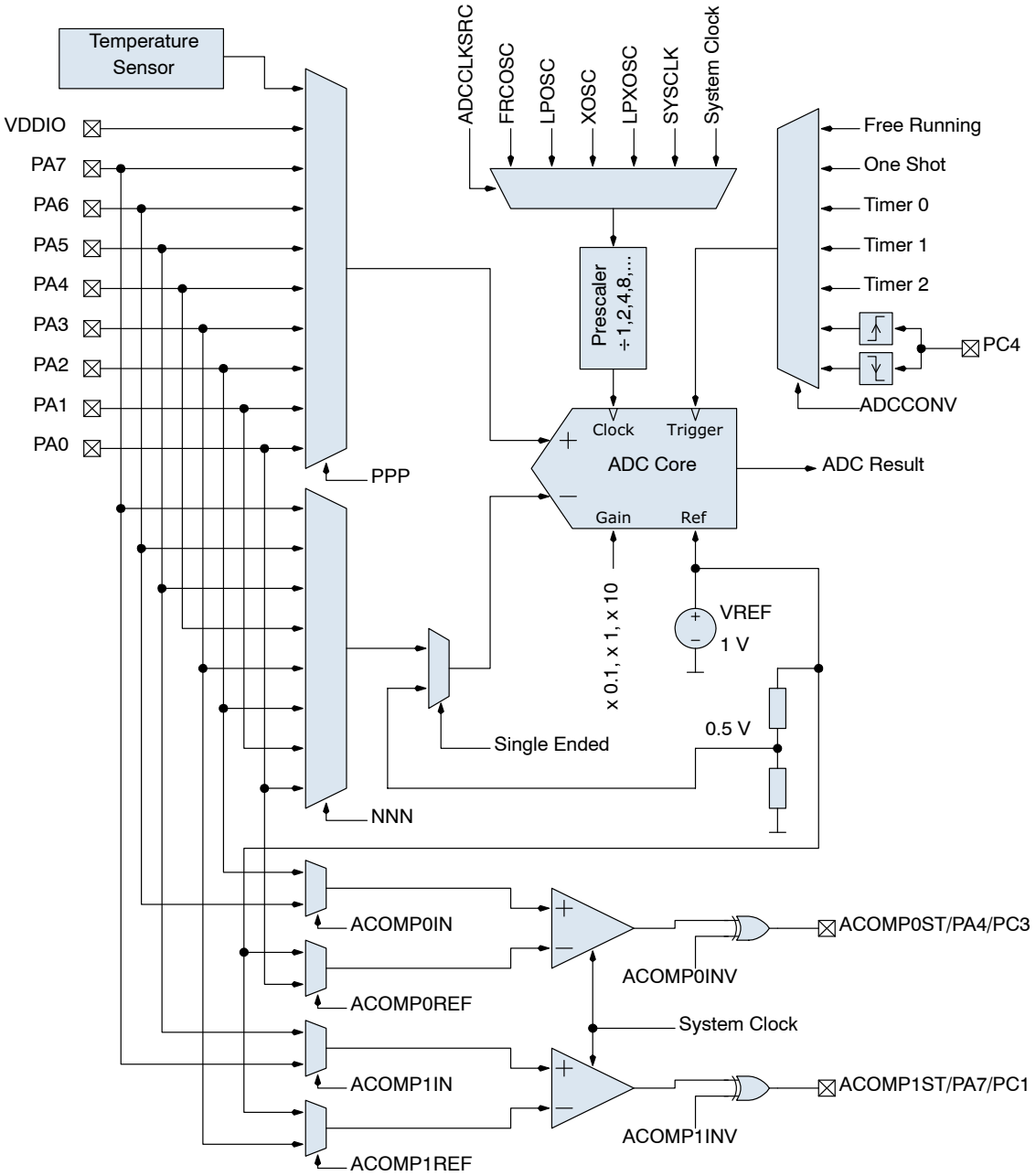

Figure 9. ADC Block Diagram

DMA Controller

The AX8052F143 features a dual channel DMA engine. Each DMA channel can either transfer data from XRAM to almost any peripheral on chip, or from almost any peripheral to XRAM. Both channels may also be cross−linked for memory−memory transfers. The DMA channels use buffer descriptors to find the buffers where data is to be retrieved or placed, thus enabling very flexible buffering strategies.

The DMA channels access XRAM in a cycle steal fashion. They access XRAM whenever XRAM is not used by the microcontroller. Their priority is lower than the microcontroller, thus interfering very little with the microcontroller. Additional logic prevents starvation of the DMA controller.

AES Engine

The AX8052F143 contains a dedicated engine for the government mandated Advanced Encryption Standard (AES). It features a dedicated DMA engine and reads input data as well as key stream data from the XRAM, and writes output data into a programmable buffer in the XRAM. The round number is programmable; the chip therefore supports AES−128, AES−192, and AES−256, as well as higher security proprietary variants. Keystream (key expansion) is

performed in software, adding to the flexibility of the AES engine. ECB (electronic codebook), CFB (cipher feedback) and OFB (output feedback) modes are directly supported without software intervention.

Crystal Oscillator and TCXO Interface (RF Reference Oscillator)

The AX8052F143 is normally operated with an external TCXO, which is required by most narrow−band regulation with a tolerance of 0.5 ppm to 1.5 ppm depending on the regulation. The on−chip crystal oscillator allows the use of an inexpensive quartz crystal as the RF generation subsystem's timing reference when possible from a regulatory point of view.

A wide range of crystal frequencies can be handled by the crystal oscillator circuit. As the reference frequency impacts both the spectral performance of the transmitter as well as the current consumption of the receiver, the choice of reference frequency should be made according to the regulatory regime targeted by the application. Application Notes for usage of AX5043 in compliance with various regulatory regimes also apply to AX8052F143.

The crystal or TCXO reference frequency should be chosen so that the RF carrier frequency is not an integer multiple of the crystal or TCXO frequency.

The oscillator circuit is enabled by programming the AX5043_PWRMODE register. At power−up it is enabled.

To adjust the circuit's characteristics to the quartz crystal being used, without using additional external components, the tuning capacitance of the crystal oscillator can be programmed. The transconductance of the oscillator is automatically regulated, to allow for fastest start−up times together with lowest power operation during steady−state oscillation.

The integrated programmable tuning capacitor bank makes it possible to connect the oscillator directly to pins CLK16N and CLK16P without the need for external capacitors. It is programmed using bits XTALCAP[5:0] in register AX5043_XTALCAP.

To synchronize the receiver frequency to a carrier signal, the oscillator frequency could be tuned using the capacitor bank however, the recommended method to implement frequency synchronization is to make use of the high resolution RF frequency generation sub−system together with the Automatic Frequency Control, both are described further down.

Alternatively a single ended reference (TXCO, CXO) may be used. The CMOS levels should be applied to CLK16P via an AC coupling with the crystal oscillator enabled. For detailed TCXO network recommendations depending on TCXO output swing refer to the AX5043 Application Note: Use with a TCXO Reference Clock.

Low Power Oscillator and Wake on Radio (WOR) Mode

The AX8052F143 transceiver features an internal lowest power fully integrated oscillator. In default mode the frequency of oscillation is 640 Hz ± 1.5%, in fast mode it is 10.2 kHz ± 1.5%.

If Wake on Radio Mode is enabled, the receiver wakes up periodically at a user selectable interval, and checks for a radio signal on the selected channel. If no signal is detected, the receiver shuts down again. If a radio signal is detected, and a valid packet is received, the microcontroller is alerted by asserting an interrupt.

SYSCLK Output

The SYSCLK pin outputs the RF reference clock signal divided by a programmable integer. Divisions from 1 to 2048 are possible. For divider ratios > 1 the duty cycle is 50%. Bits SYSCLK[3:0] in the AX5043_PINCFG1 register set the divider ratio. The SYSCLK output can be disabled.

Power−on−Reset (POR) and RESET_N Input

AX8052F143 has an integrated power−on−reset block which is edge sensitive to VDD_IO. For many common application cases no external reset circuitry is required. However, if VDD_IO ramps cannot be guaranteed, an external reset circuit is recommended. For detailed recommendations and requirements see the AX8052 Application Note: Power On Reset.

After POR or reset all registers are set to their default values.

The RESET_N pin contains a weak pull−up. However, it is strongly recommended to connect the RESET_N pin to VDD_IO if not used, for additional robustness.

The AX8052F143 can be reset by software as well. The microcontroller is reset by writing 1 to the SWRESET bit of the PCON register. The transceiver can be reset by first writing 1 and then 0 to the RST bit in the AX5043_PWRMODE register.

Ports

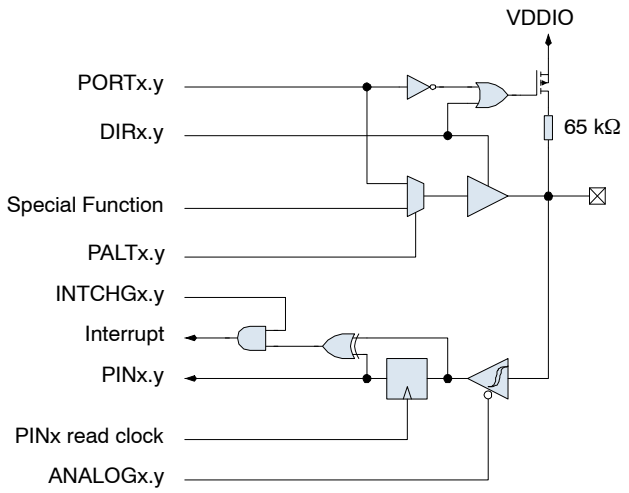

Figure 10. Port Pin Schematic

Figure 10 shows the GPIO logic. The DIR register bit determines whether the port pin acts as an output (1) or an input (0).

If configured as an output, the PALT register bit determines whether the port pin is connected to a peripheral output (1), or used as a GPIO pin (0). In the latter case, the PORT register bit determines the port pin drive value.

If configured as an input, the PORT register bit determines whether a pull−up resistor is enabled (1) or disabled (0). Inputs have chmitt−trigger characteristic. Port A inputs may be disabled by setting the ANALOGA register bit; this prevents additional current consumption if the voltage level of the port pin is mid−way between logic low and logic high, when the pin is used as an analog input.

Port A, B and C pins may interrupt the microcontroller if their level changes. The INTCHG register bit enables the interrupt. The PIN register bit reflects the value of the port pin. Reading the PIN register also resets the interrupt if interrupt on change is enabled.

PWRAMP and ANTSEL

PWRAMP functionality is available on PB2 if PALTRADIO bit 6 and DIRB bit 2 are set. ANTSEL functionality is available on PB3 if PALTRADIO bit 7 and DIRB bit 3 are set. If these pins should be set to high−impedance, it must be done by clearing the corresponding DIRB bit, not by setting AX5043_PINFUNCPWRAMP or AX5043_PINFUNCANTSEL to Z.

TRANSCEIVER

The transceiver block is controllable through its registers, which are mapped into the X data space of the micro−controller. The transceiver block features its own 4 word ×10 bit FIFO. The microcontroller can either be interrupted at a programmable FIFO fill level, or one of the DMA channels can be instructed to transfer between XRAM and the transceiver FIFO.

RF Frequency Generation Subsystem

The RF frequency generation subsystem consists of a fully integrated synthesizer, which multiplies the reference frequency from the crystal oscillator to get the desired RF frequency. The advanced architecture of the synthesizer enables frequency resolutions of 1 Hz, as well as fast settling times of 5 – 50 µs depending on the settings (see section AC Characteristics). Fast settling times mean fast start−up and fast RX/TX switching, which enables low−power system design.

For receive operation the RF frequency is fed to the mixer, for transmit operation to the power−amplifier.

The frequency must be programmed to the desired carrier frequency.

The synthesizer loop bandwidth can be programmed, this serves three purposes:

1. Start−up time optimization, start−up is faster for higher synthesizer loop bandwidths
2. TX spectrum optimization, phase−noise at 300 kHz to 1 MHz distance from the carrier improves with lower synthesizer loop bandwidths
3. Adaptation of the bandwidth to the data−rate. For transmission of FSK and MSK it is required that the synthesizer bandwidth must be in the order of the data−rate.

VCO

An on−chip VCO converts the control voltage generated by the charge pump and loop filter into an output frequency. This frequency is used for transmit as well as for receive operation. The frequency can be programmed in 1 Hz steps in the AX5043_FREQ registers. For operation in the 433 MHz band, the RFDIV bit in the AX5043_PLLVCODIV register must be programmed.

The fully integrated VCO allows to operate the device in the frequency ranges 800 – 1050 MHz and 400 – 520 MHz.

The carrier frequency range can be extended to 54 – 525 MHz and 27 – 262 MHz by using an appropriate external inductor between device pins L1 and L2. The bits VCO2INT and VCOSEL in the AX5043_PLLVCODIV register must be set high to enter this mode.

It is also possible to use a fully external VCO by setting bits VCO2INT = 0 and VCOSEL = 1 in the AX5043_PLLVCODIV register. A differential input at a frequency of double the desired RF frequency must be input at device pins L1 and L2. The control voltage for the VCO can be output at device pin FILT when using external filter mode. The voltage range of this output pin is 0 – 1.8 V. This mode of operation is recommended for special applications where the phase noise requirements are not met when using the fully internal VCO or the internal VCO with external inductor.

VCO Auto−Ranging

The AX8052F143 has an integrated auto−ranging function, which allows to set the correct VCO range for specific frequency generation subsystem settings automatically. Typically it has to be executed after power−up. The function is initiated by setting the RNG_START bit in the AX5043_PLLRANGINGA or AX5043_PLLRANGINGB register. The bit is readable and a 0 indicates the end of the ranging process. Setting RNG_START in the AX5043_PLLRANGINGA register ranges the frequency in AX5043_FREQA, while setting RNG_START in the AX5043_PLLRANGINGB register ranges the frequency in AX5043_FREQB. The RNGERR bit indicates the correct execution of the auto−ranging. VCO auto−ranging works with the fully integrated VCO and with the internal VCO with external inductor.

Loop Filter and Charge Pump

The AX8052F143 internal loop filter configuration together with the charge pump current sets the synthesizer loop band width. The internal loop−filter has three configurations that can be programmed via the register bits FLT[1:0] in registers AX5043_PLLLOOP or AX5043_PLLLOOPBOOST the charge pump current can be programmed using register bits PLLCPI[7:0] in registers AX5043_PLLCPI or AX5043_PLLCPIBOOST. Synthesizer bandwidths are typically 50 – 500 kHz depending on the AX5043_PLLLOOP or AX5043_PLLLOOPBOOST settings, for details see the section: AC Characteristics.

The AX8052F143 can be setup in such a way that when the synthesizer is started, the settings in the registers AX5043_PLLLOOPBOOST and AX5043_PLLCPIBOOST are applied first for a programmable duration before reverting to the settings in AX5043_PLLLOOP and AX5043_PLLCPI. This feature enables automated fastest start−up.

Setting bits FLT[1:0] = 00 bypasses the internal loop filter and the VCO control voltage is output to an external loop filter at pin FILT. This mode of operation is recommended for achieving lower bandwidths than with the internal loop filter and for usage with a fully external VCO.

Registers

Table 22. RF FREQUENCY GENERATION REGISTERS

Register	Bits	Purpose
AX5043_PLLLOOP AX5043_PLLLOOPBOOST	FLT[1:0]	Synthesizer loop filter bandwidth and selection of external loop filter, recommended usage is to increase the bandwidth for faster settling time, bandwidth increases of factor 2 and 5 are possible.
AX5043_PLLCPI AX5043_PLLCPIBOOST		Synthesizer charge pump current, recommended usage is to decrease the bandwidth (and improve the phase−noise) for low data−rate transmissions.
AX5043_PLLVCODIV	REFDIV	Sets the synthesizer reference divider ratio.
	RFDIV	Sets the synthesizer output divider ratio.
	VCOSEL	Selects either the internal or the external VCO
	VCO2INT	Selects either the internal VCO inductor or an external inductor between pins L1 and L2
AX5043_FREQA, AX5043_FREQB		Programming of the carrier frequency
AX5043_PLLRANGINGA, AX5043_PLLRANGINGB		Initiate VCO auto−ranging and check results

RF Input and Output Stage (ANTP/ANTN/ANTP1)

The AX8052F143 has two main antenna interface modes:

1. Both RX and TX use differential pins ANTP and ANTN. RX/TX switching is handled internally. This mode is recommended for highest output powers, highest sensitivities and for direct connection to dipole antennas. Also see Figure 15.
2. RX uses the differential antenna pins ANTP and ANTN. TX uses the single ended antenna pin ANTP1. RX/TX switching is handled externally. This can be done either with an external RX/TX switch or with a direct tie configuration. This mode is recommended for low output powers at high efficiency Figure 18 and for usage with external power amplifiers Figure 17.

Pin PB2 can be used to control an external RX/TX switch when operating the device together with an external PA (Figure 17). Pin PB3 can be used to control an external antenna switch when receiving with two antennas (Figure 19).

When antenna diversity is enabled, the radio controller will, when not in the middle of receiving a packet, periodically probe both antennas and select the antenna with the highest signal strength. The radio controller can be instructed to periodically write both RSSI values into the FIFO. Antenna diversity mode is fully automatic.

LNA

The LNA amplifies the differential RF signal from the antenna and buffers it to drive the I/Q mixer. An external matching network is used to adapt the antenna impedance to the IC impedance. A DC feed to GND must be provided at the antenna pins.

PA

In TX mode the PA drives the signal generated by the frequency generation subsystem out to either the differential antenna terminals or to the single ended antenna pin. The antenna terminals are chosen via the bits TXDIFF and TXSE in register AX5043_MODECFGA.

The output power of the PA is programmed via the register AX5043_TXPWRCOEFFB.

The PA can be digitally pre−distorted for high linearity.

The output amplitude can be shaped (raised cosine), this mode is selected with bit AMPLSHAPE in register AX5043_MODECFGA PA ramping is programmable in increments of the bit time and can be set to 1 – 8 bit times via bits SLOWRAMP in register AX5043_MODECFGA.

Output power as well as harmonic content will depend on the external impedance seen by the PA.

Digital IF Channel Filter and Demodulator

The digital IF channel filter and the demodulator extract the data bit−stream from the incoming IF signal. They must be programmed to match the modulation scheme as well as the data−rate. Inaccurate programming will lead to loss of sensitivity.

The channel filter offers bandwidths of 995 Hz up to 221 kHz.

The AXSEM RadioLab Software calculates the necessary register settings for optimal performance. An overview of the registers involved is given in the following table as reference, for details see the AX5043 Programming Manual. The register setups typically must be done once at power−up of the device.

Registers

Table 23. CHANNEL FILTER AND DEMODULATOR REGISTERS

Register	Remarks
AX5043_DECIMATION	This register programs the bandwidth of the digital channel filter.
AX5043_RXDATARATE2… AX5043_RXDATARATE0	These registers specify the receiver bit rate, relative to the channel filter bandwidth.
AX5043_MAXDROFFSET2… AX5043_MAXDROFFSET0	These registers specify the maximum possible data rate offset
AX5043_MAXRFOFFSET2… AX5043_MAXRFOFFSET0	These registers specify the maximum possible RF frequency offset
AX5043_TIMEGAIN, AX5043_DRGAIN	These registers specify the aggressiveness of the receiver bit timing recovery. More aggressive settings allow the receiver to synchronize with shorter preambles, at the expense of more timing jitter and thus a higher bit error rate at a given signal−to−noise ratio.
AX5043_MODULATION	This register selects the modulation to be used by the transmitter and the receiver, i.e. whether ASK, FSK should be used.
AX5043_PHASEGAIN, AX5043_FREQGAINA, AX5043_FREQGAINB, AX5043_FREQGAINC, AX5043_FREQGAIND, AX5043_AMPLGAIN	These registers control the bandwidth of the phase, frequency offset and amplitude tracking loops.
AX5043_AGCGAIN	This register controls the AGC (automatic gain control) loop slopes, and thus the speed of gain adjustments. The faster the bit−rate, the faster the AGC loop should be.
AX5043_TXRATE	These registers control the bit rate of the transmitter.
AX5043_FSKDEV	These registers control the frequency deviation of the transmitter in FSK mode. The receiver does not explicitly need to know the frequency deviation, only the channel filter bandwidth has to be set wide enough for the complete modulation to pass.

Encoder

The encoder is located between the Framing Unit, the Demodulator and the Modulator. It can optionally transform the bit−stream in the following ways:

- It can invert the bit stream.
- It can perform differential encoding. This means that a zero is transmitted as no change in the level, and a one is transmitted as a change in the level.
- It can perform Manchester encoding. Manchester encoding ensures that the modulation has no DC content and enough transitions (changes from 0 to 1 and from 1 to 0) for the demodulator bit timing recovery to function correctly, but does so at a doubling of the data rate.
- It can perform spectral shaping (also know as whitening). Spectral shaping removes DC content of the bit stream, ensures transitions for the demodulator bit timing recovery, and makes sure that the transmitted spectrum does not have discrete lines even if the transmitted data is cyclic. It does so without adding additional bits, i.e. without changing the data rate. Spectral Shaping uses a self synchronizing feedback shift register.

The encoder is programmed using the register AX5043_ENCODING, details and recommendations on usage are given in the AX5043 Programming Manual.

Framing and FIFO

Most radio systems today group data into packets. The framing unit is responsible for converting these packets into a bit−stream suitable for the modulator, and to extract packets from the continuous bit−stream arriving from the demodulator.

The Framing unit supports two different modes:

- Packet modes
- Raw modes

The microcontroller communicates with the framing unit through a 256 byte FIFO. Data in the FIFO is organized in Chunks. The chunk header encodes the length and what data is contained in the payload. Chunks may contain packet data, but also RSSI, Frequency offset, Timestamps, etc.

The AX8052F143 contains one FIFO. Its direction is switched depending on whether transmit or receive mode is selected.

The FIFO can be operated in polled or interrupt driven modes. In polled mode, the microcontroller must periodically read the FIFO status register or the FIFO count register to determine whether the FIFO needs servicing.

In interrupt mode EMPTY, NOT EMPTY, FULL, NOT FULL and programmable level interrupts are provided. Interrupts are acknowledged by removing the cause for the interrupt, i.e. by emptying or filling the FIFO.

To lower the interrupt load on the microcontroller, one of the DMA channels may be instructed to transfer data

between the transceiver FIFO and the XRAM memory. This way, much larger buffers can be realized in XRAM, and interrupts need only be serviced if the larger XRAM buffers fill or empty.

Packet Modes

The AX8052F143 offers different packet modes. For arbitrary packet sizes HDLC is recommended since the flag and bit−stuffing mechanism. The AX8052F143 also offers packet modes with fixed packet length with a byte indicating the length of the packet.

In packet modes a CRC can be computed automatically.

HDLC Mode is the main framing mode of the AX8052F143. In this mode, the AX8052F143 performs automatic packet delimiting, and optional packet correctness check by inserting and checking a cyclic redundancy check (CRC) field.

NOTE: HDLC mode follows High−Level Data Link Control (HDLC, ISO 13239) protocol.

The packet structure is given in the following table.

Table 24. HDLC PACKET STRUCTURE

Flag	Address	Control	Information	FCS	(Optional Flag)
8 bit	8 bit	8 or 16 bit	Variable length, 0 or more bits in multiples of 8	16 / 32 bit	8 bit

HDLC packets are delimited with flag sequences of content 0x7E.

In AX8052F143 the meaning of address and control is user defined. The Frame Check Sequence (FCS) can be programmed to be CRC−CCITT, CRC−16 or CRC−32.

The receiver checks the CRC, the result can be retrieved from the FIFO, the CRC is appended to the received data.

In Wireless M−Bus Mode, the packet structure is given in the following table.

NOTE: Wireless M−Bus mode follows EN13757−4

Table 25. WIRELESS M−BUS PACKET STRUCTURE

Preamble	L	C	M	A	FCS	Optional Data Block (optionally repeated with FCS)	FCS
variable	8 bit	8 bit	8 bit	8 bit	16 bit	8 – 96 bit	16 bit

For details on implementing a HDLC communication as well as Wireless M−Bus please use the AXSEM RadioLab software and see the AX5043 Programming Manual.

Raw Modes

In Raw mode, the AX8052F143 does not perform any packet delimiting or byte synchronization. It simply serializes transmit bytes and de−serializes the received bit−stream and groups it into bytes. This mode is ideal for implementing legacy protocols in software.

Raw mode with preamble match is similar to raw mode. In this mode, however, the receiver does not receive anything until it detects a user programmable bit pattern (called the preamble) in the receive bit−stream. When it detects the preamble, it aligns the de−serialization to it.

The preamble can be between 4 and 32 bits long.

RX AGC and RSSI

AX8052F143 features three receiver signal strength indicators (RSSI):

1. RSSI before the digital IF channel filter.
   The gain of the receiver is adjusted in order to keep the analog IF filter output level inside the working range of the ADC and demodulator. The register AX5043_AGCCOUNTER contains the current value of the AGC and can be used as an RSSI. The step size of this RSSI is 0.625 dB. The value can be used as soon as the RF frequency generation sub−system has been programmed.
2. RSSI behind the digital IF channel filter.
   The register AX5043_RSSI contains the current value of the RSSI behind the digital IF channel filter. The step size of this RSSI is 1 dB.
3. RSSI behind the digital IF channel filter high accuracy. The demodulator also provides amplitude information in the AX5043_TRK_AMPLITUDE register. By combining both the AX5043_AGCCOUNTER and the AX5043_TRK_AMPLITUDE registers, a high resolution (better than 0.1 dB) RSSI value can be computed at the expense of a few arithmetic operations on the micro−controller. The AXSEM RadioLab Software calculates the necessary register settings for best performance.

Modulator

Depending on the transmitter settings the modulator generates various inputs for the PA:

Table 26. MODULATIONS

Modulation	Bit = 0	Bit = 1	Main Lobe Bandwidth	Max. Bitrate
ASK	PA off	PA on	BW = BITRATE	125 kBit/s
FSK/MSK/GFSK/GMSK	$\Delta f = -f_{deviation}$	$\Delta f = +f_{deviation}$	BW = (1 + h) ·BITRATE	125 kBit/s
PSK	$\Delta\Phi = 0°$	$\Delta\Phi = 180°$	BW = BITRATE	125 kBit/s

h = modulation index. It is the ratio of the deviation compared to the bit−rate; $f_{deviation} = 0.5 \cdot h \cdot BITRATE$, AX8052F143 can demodulate signals with h < 32.

ASK = amplitude shift keying

FSK = frequency shift keying

MSK= minimum shift keying; MSK is a special case of FSK, where h = 0.5, and therefore $f_{deviation} = 0.25 \cdot BITRATE$; the advantage of MSK over FSK is that it can be demodulated more robustly.

PSK = phase shift keying

All modulation schemes, except 4−FSK, are binary.

Amplitude can be shaped using a raised cosine waveform. Amplitude shaping will also be performed for constant amplitude modulation ((G)FSK, (G)MSK) for ramping up and down the PA. Amplitude shaping should always be enabled.

Frequency shaping can either be hard (FSK, MSK), or Gaussian (GMSK, GFSK), with selectable BT = 0.3 or BT = 0.5.

Table 27. 4−FSK MODULATION

Modulation	DiBit = 00	DiBit = 01	DiBit = 11	DiBit = 10	Main Lobe Bandwidth	Max. Bitrate
4−FSK	$\Delta f = -3f_{deviation}$	$\Delta f = -f_{deviation}$	$\Delta f = +f_{deviation}$	$\Delta f = +3f_{deviation}$	BW = (1 + 3 h) ·BITRATE	125 kBit/s

4−FSK Frequency shaping is always hard.

Automatic Frequency Control (AFC)

The AX8052F143 features an automatic frequency tracking loop which is capable of tracking the transmitter frequency within the RX filter band width. On top of that the AX8052F143 has a frequency tracking register AX5043_TRKRFFREQ to synchronize the receiver frequency to a carrier signal. For AFC adjustment, the frequency offset can be computed with the following formula:

$$\Delta f = \frac{AX5043_TRKRFFREQ}{2^{32}} f_{XTAL}$$

PWRMODE Register

The AX8052F143 transceiver features its own independent power management, independent from the microcontroller. While the microcontroller power mode is controlled through the PCON register, the AX5043_PWRMODE register controls which parts of the transceiver are operating.

Table 28. PWRMODE REGISTER

AX5043_PWRMODE Register	Name	Description
0000	POWERDOWN	All digital and analog functions, except the register file, are disabled. The core supply voltages are switched off to conserve leakage power. Register contents are preserved. Access to the FIFO is not possible and the contents are not preserved. POWERDOWN mode is only entered once the FIFO is empty.
0001	DEEPSLEEP	The transceiver is fully turned off. All digital and analog functions are disabled. All register contents are lost. To leave DEEPSLEEP mode the pin SEL has to be pulled low. This will initiate startup and reset of the transceiver. Then the MISO line should be polled, as it will be held low during initialization and will rise to high at the end of the initialization, when the chip becomes ready for operation. It is recommended to use the functions ax5043_enter_deepsleep() and ax5043_wakeup_deepsleep() provided in libmf
0101	STANDBY	The crystal oscillator and the reference are powered on; receiver and transmitter are off. Register contents are preserved and accessible. Access to the FIFO is not possible and the contents are not preserved. STANDBY is only entered once the FIFO is empty.
0110	FIFO	The reference is powered on. Register contents are preserved and accessible. Access to the FIFO is possible and the contents are preserved.

Table 28. PWRMODE REGISTER

AX5043_PWRMODE Register	Name	Description
1000	SYNTHRX	The synthesizer is running on the receive frequency. Transmitter and receiver are still off. This mode is used to let the synthesizer settle on the correct frequency for receive.
1001	FULLRX	Synthesizer and receiver are running.
1011	WOR	Receiver wakeup−on−radio mode. The mode the same as POWERDOWN, but the 640 Hz internal low power oscillator is running.
1100	SYNTHTX	The synthesizer is running on the transmit frequency. Transmitter and receiver are still off. This mode is used to let the synthesizer settle on the correct frequency for transmit.
1101	FULLTX	Synthesizer and transmitter are running. Do not switch into this mode before the synthesizer has completely settled on the transmit frequency (in SYNTHTX mode), otherwise spurious spectral transmissions will occur.

Table 29. A TYPICAL AX5043_PWRMODE SEQUENCE FOR A TRANSMIT SESSION

Step	PWRMODE	Remarks
1	POWERDOWN	
2	STANDBY	The settling time is dominated by the crystal used, typical value 3ms.
3	FULLTX	Data transmission
4	POWERDOWN	

Table 30. A TYPICAL AX5043_PWRMODE SEQUENCE FOR A RECEIVE SESSION

Step	PWRMODE [3:0]	Remarks
1	POWERDOWN	
2	STANDBY	The settling time is dominated by the crystal used, typical value 3ms.
3	FULLRX	Data reception
4	POWERDOWN	

Voltage Regulator

The AX8052F143 transceiver uses its own dedicated on−chip voltage regulator system to create stable supply voltages for the internal circuitry from the primary supply VDD_IO. The I/O level of the digital pins is VDD_IO.

Pins VDD_ANA are supplied for external decoupling of the power supply used for the on−chip PA.

The voltage regulator system must be set into the appropriate state before receive or transmit operations can be initiated. This is handled automatically when programming the device modes via the AX5043_PWRMODE register.

Register AX5043_POWSTAT contains status bits that can be read to check if the regulated voltages are ready (bit SVIO) or if VDD_IO has dropped below the brown−out level of 1.3 V (bit SSUM).

In power−down mode the core supply voltages for digital and analog functions are switched off to minimize leakage power. Most register contents are preserved but access to the FIFO is not possible and FIFO contents are lost.

In deep−sleep mode all supply voltages are switched off. All digital and analog functions are disabled. All register contents are lost.

APPLICATION INFORMATION

Typical Application Diagrams

Connecting to Debug Adapter

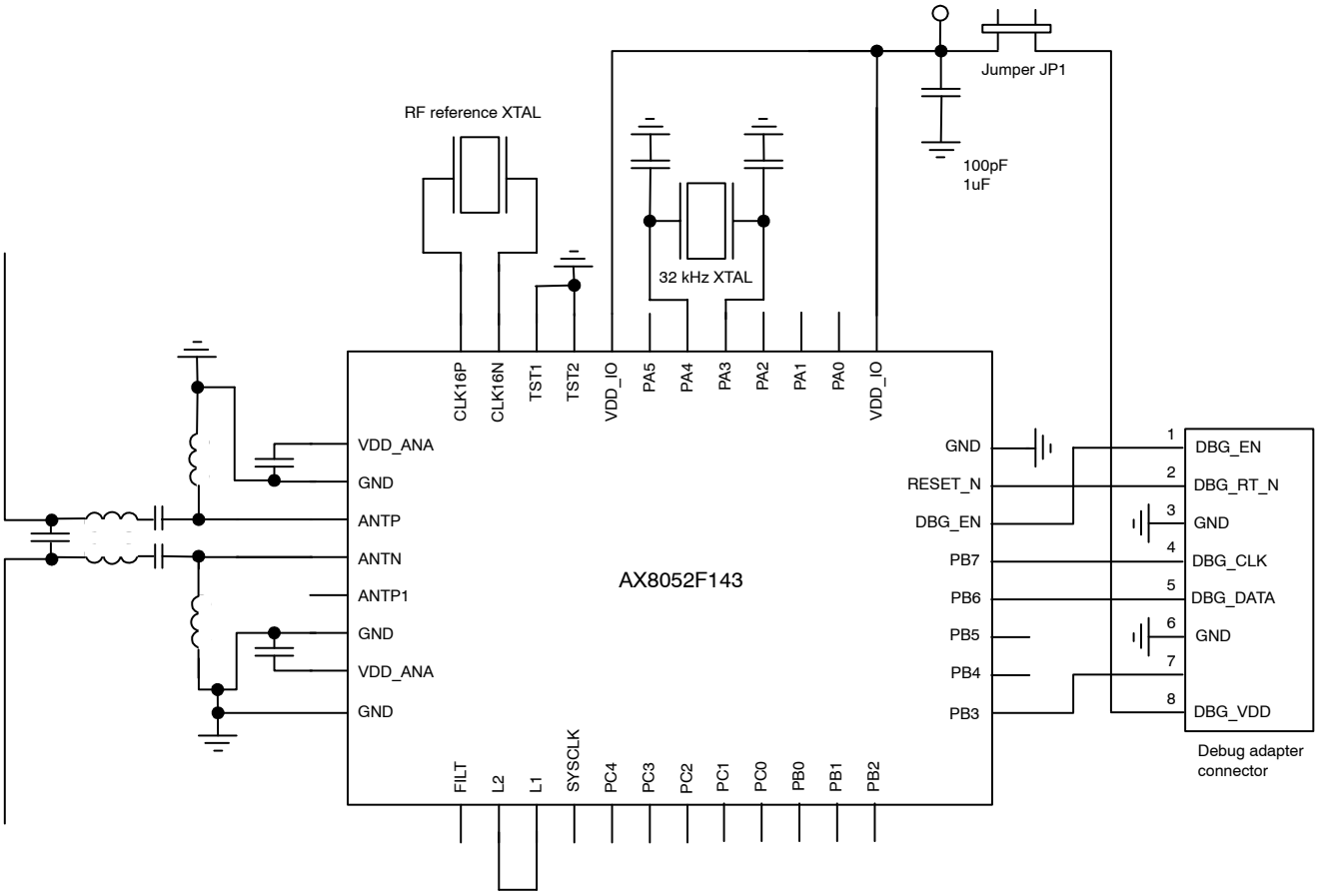

Figure 11. Typical Application Diagram with Connection to the Debug Adapter

Short Jumper JP1−1 if it is desired to supply the target board from the Debug Adapter (50 mA max). Connect the bottom exposed pad of the AX8052F143 to ground.

If the debugger is not running, PB6 and PB7 are not driven by the Debug Adapter. If the debugger is running, the PB6 and PB7 values that the software reads may be set using the Pin Emulation feature of the debugger.

PB3 is driven by the debugger only to bring the AX8052F143 out of Deep Sleep. It is high impedance otherwise.

The 32 kHz crystal is optional, the fast crystal at pins CLK16N and CLK16P is used as reference frequency for the RF RX/TX. Crystal load capacitances should be chosen according to the crystal's datasheet. At pins CLK16N and CLK16P they the internal programmable capacitors may be used, at pins PA3 and PA4 capacitors must be connected externally.

Match to 50 Ω for Differential Antenna Pins
(868 / 433 MHz RX / TX Operation)

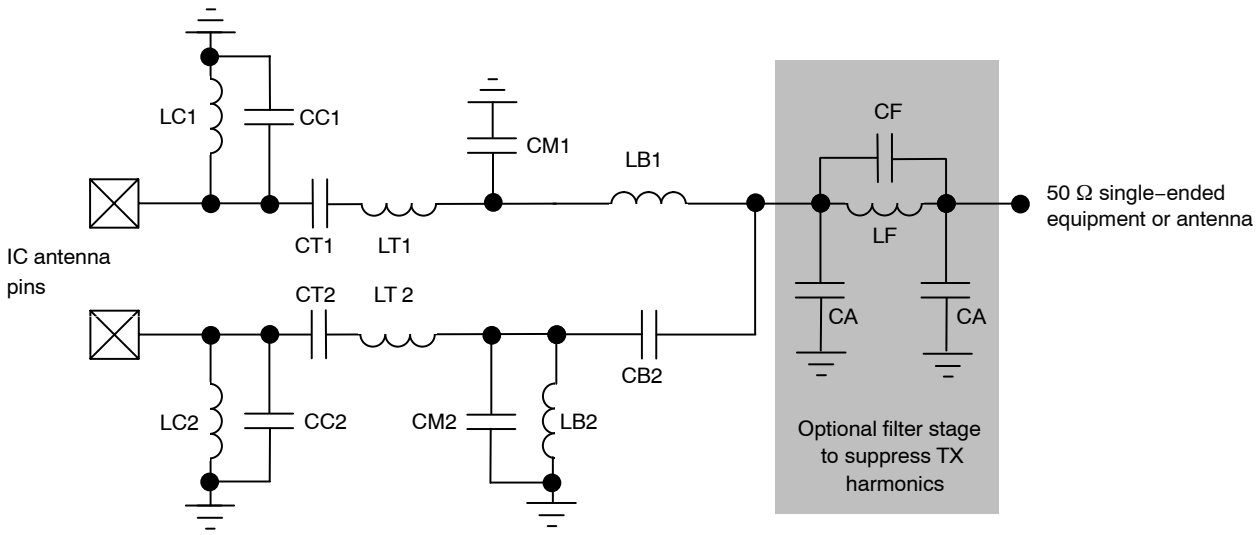

Figure 12. Structure of the Differential Antenna Interface for TX/RX Operation to 50 Ω Single−ended Equipment or Antenna

Table 31. TYPICAL COMPONENT VALUES

Frequency Band	LC1,2 [nH]	CC1,2 [pF]	CT1,2 [pF]	LT1,2 [nH]	CM1 [pF]	CM2 [pF]	LB1,2 [nH]	CB2 [pF]	CF [pF] optional	LF [nH] optional	CA [pF] optional
868 / 915 MHz	18	nc	2.7	18	6.2	3.6	12	2.7	nc	0 Ω	nc
433 MHz	100	nc	4.3	43	11	5.6	27	5.1	nc	0 Ω	nc
470 MHz	100	nc	3.9	33	4.7	nc	22	4.7	nc	0 Ω	nc
169 MHz	150	10	10	120	12	nc	68	12	6.8	30	27

Match to 50 Ω for Single−ended Antenna Pin
(868 / 915 / 433 MHz TX Operation)

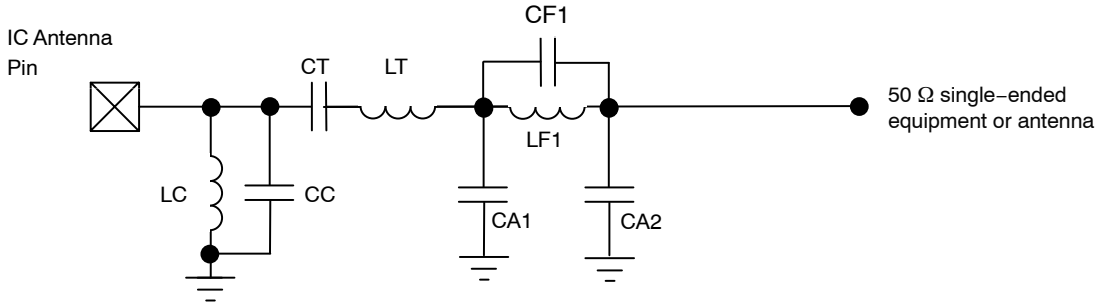

Figure 13. Structure of the Single−ended Antenna Interface for TX Operation to 50 Ω Single−ended Equipment or Antenna

Table 32. TYPICAL COMPONENT VALUES

Frequency Band	LC [nH]	CC [pF]	CT [pF]	LT [nH]	CF1 [pF]	LF1 [nH]	CA1 [pF]	CA2 [pF]
868 / 915 MHz	18	nc	2.7	18	3.6	2.2	3.6	nc
433 MHz	100	nc	4.3	43	6.8	4.7	5.6	nc

Match to 50 Ω for Single−ended Antenna Pin
(169 MHz TX Operation)

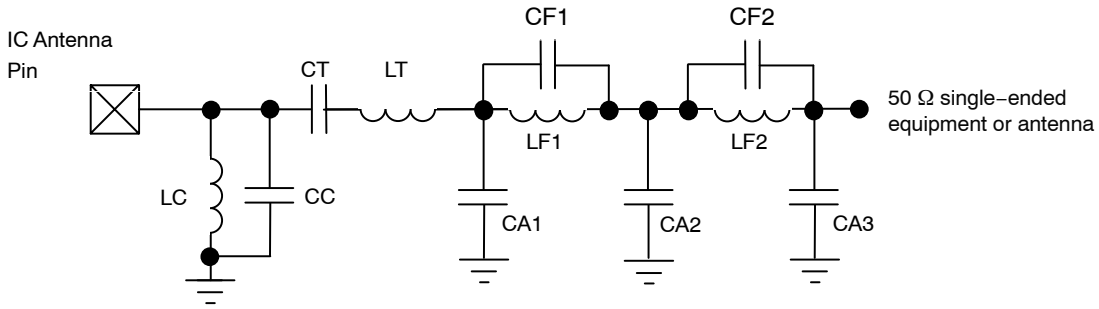

Figure 14. Structure of the Single−ended Antenna Interface for TX Operation to 50 Ω Single−ended Equipment or Antenna

Table 33. TYPICAL COMPONENT VALUES

Frequency Band	LC [nH]	CC [pF]	CT [pF]	LT [nH]	CF1 [pF]	LF1 [nH]	CF2 [pF]	LF2 [nH]	CA1 [pF]	CA2 [pF]	CA3 [pF]
169 MHz	150	2.2	22	120	4.7	39	1.8	47	33	47	15

Using a Dipole Antenna and the Internal TX/RX Switch

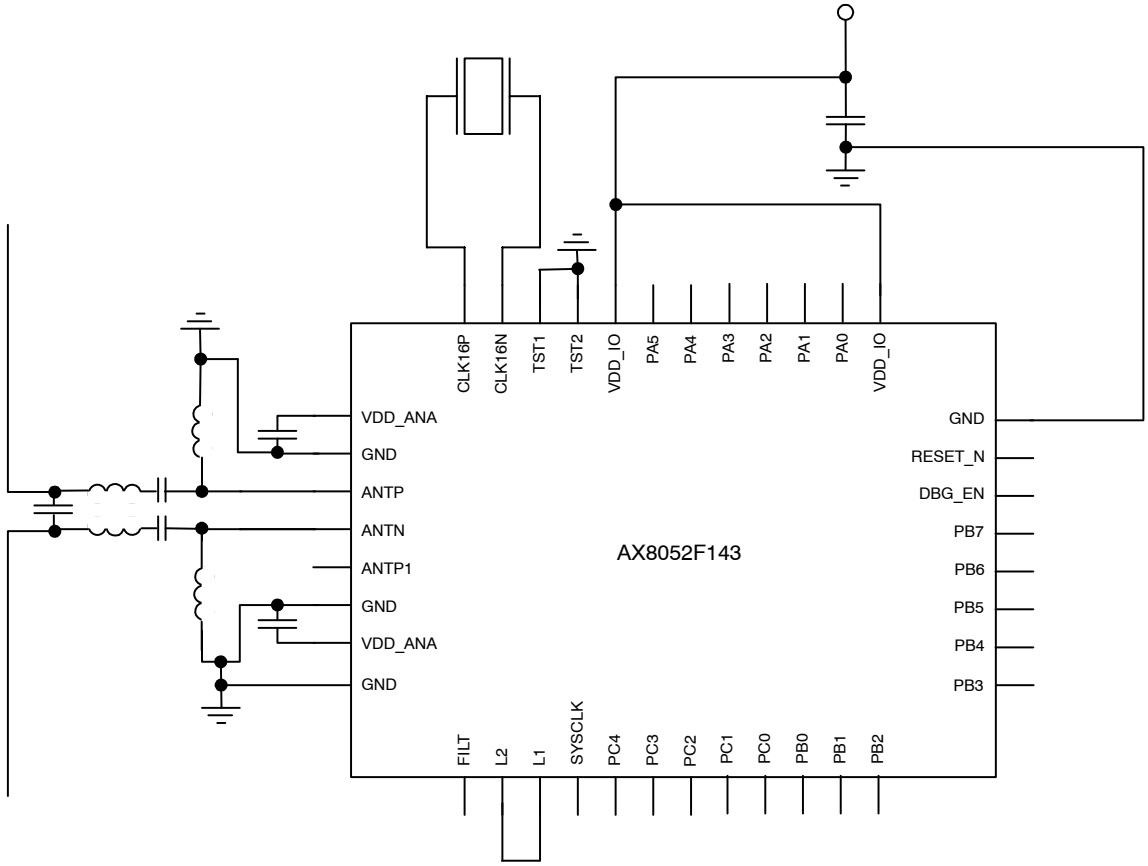

Figure 15. Typical Application Diagram with Dipole Antenna and Internal TX/RX Switch

Using a Single−ended Antenna and the Internal TX/RX Switch

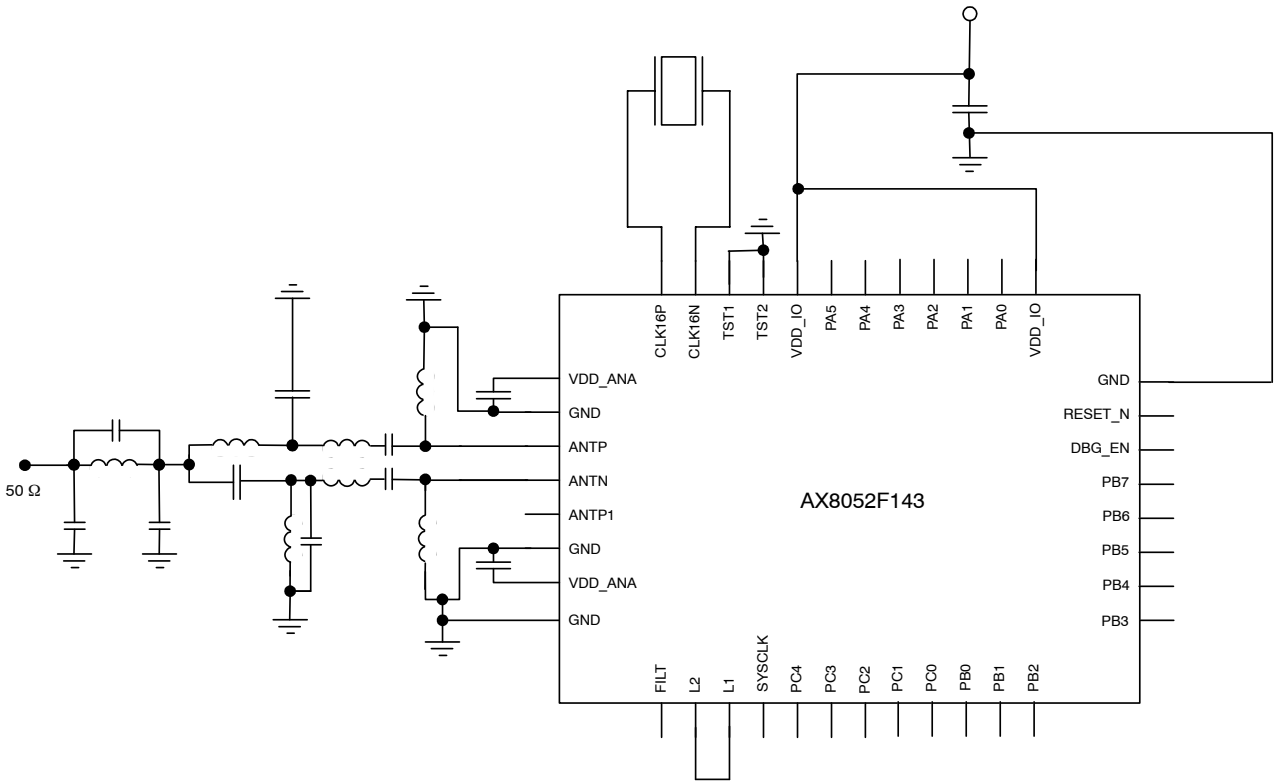

Figure 16. Typical Application Diagram with Single−ended Antenna and Internal TX/RX Switch

Using an External High−power PA and an External TX/RX Switch

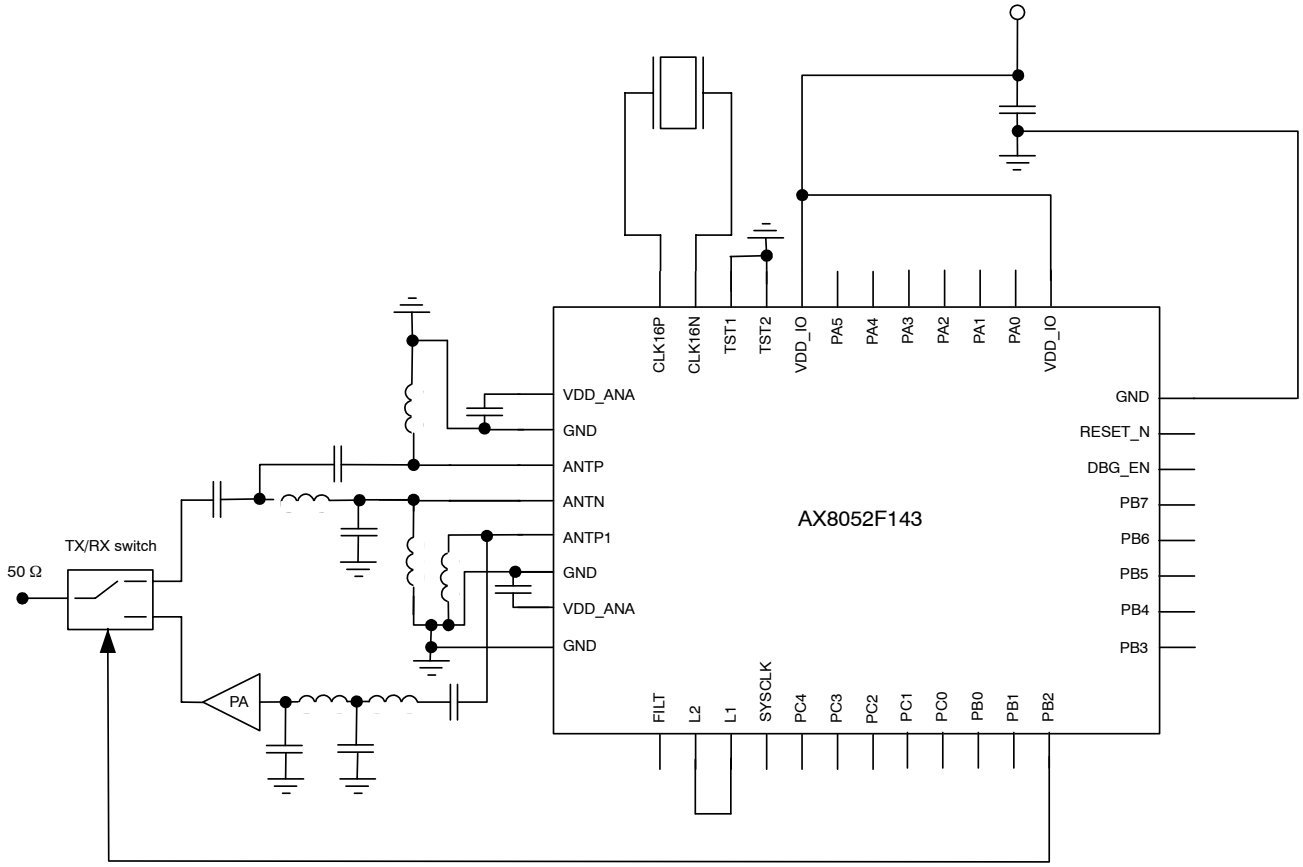

Figure 17. Typical Application Diagram with Single−ended Antenna, External PA and External Antenna Switch

Using the Single−ended PA

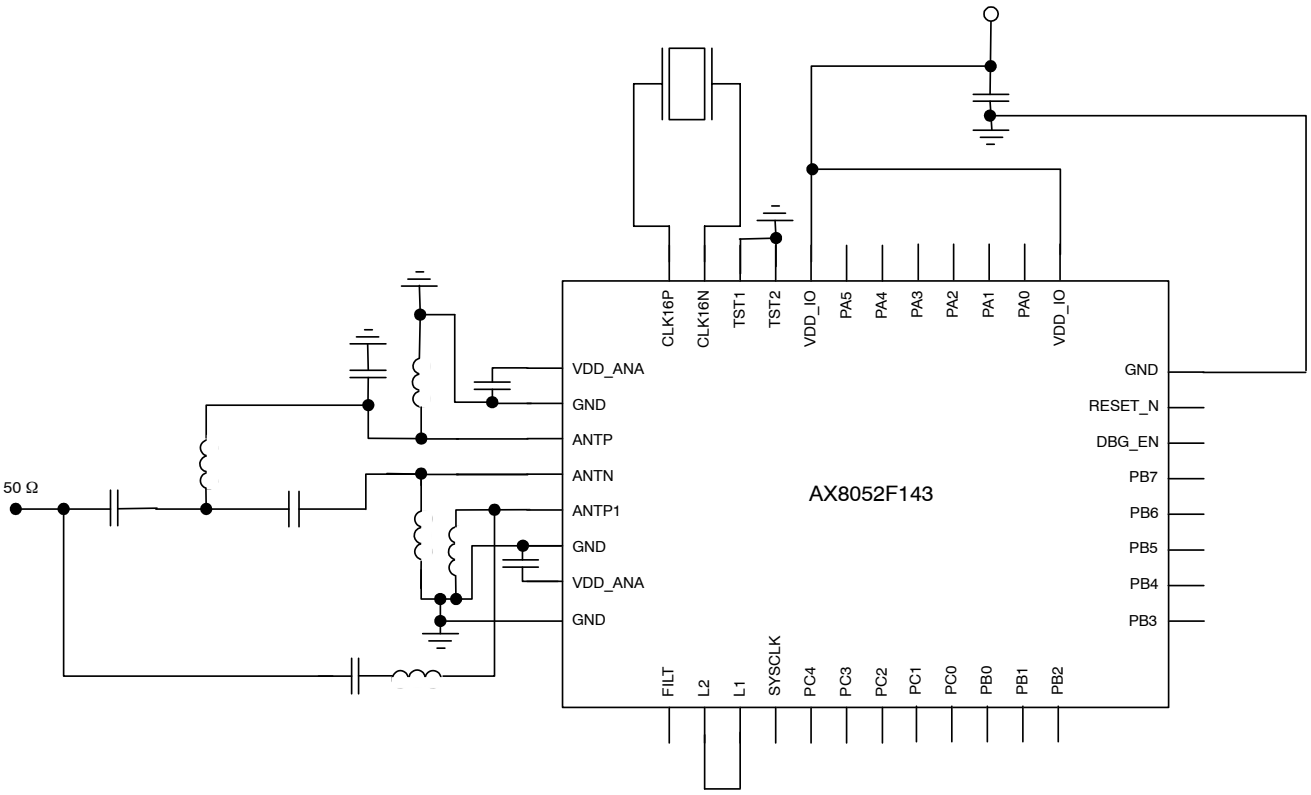

Figure 18. Typical Application Diagram with Single−ended Antenna, Single−ended Internal PA, without RX/TX Switch

NOTE: For details and recommendations on implementing this configuration refer to the AX8052F143 Application Note: 0 dBm / 8 mA TX and 9.5 mA RX Configuration for the 868 MHz Band.

Using Two Antenna

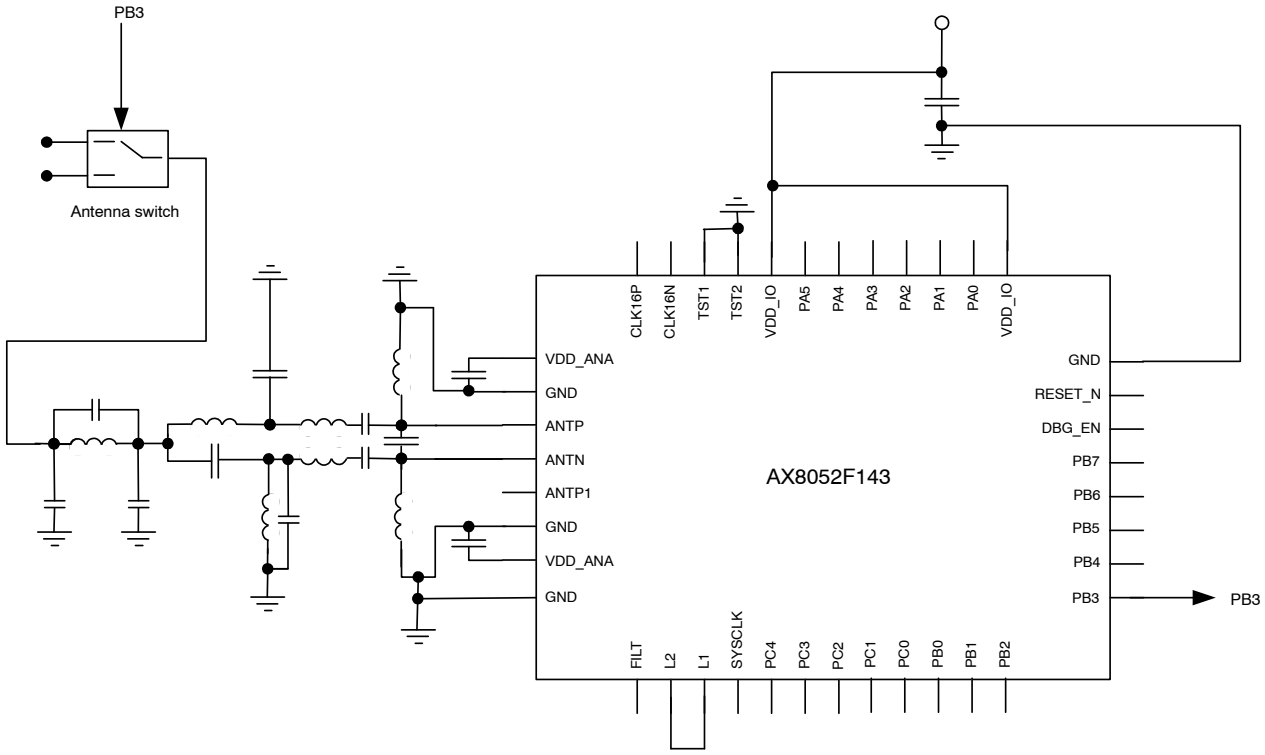

Figure 19. Typical Application Diagram with Two Single−ended Antenna and External Antenna Switch

Using an External VCO Inductor

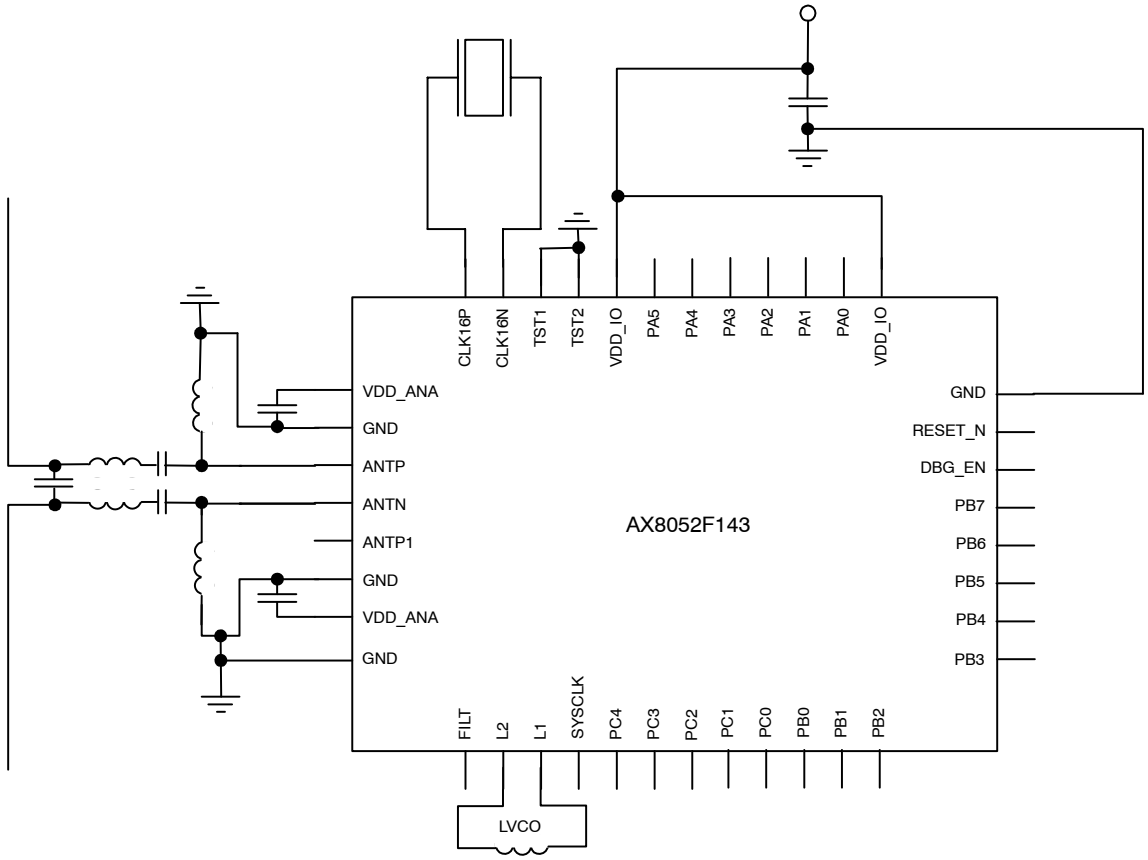

Figure 20. Typical Application Diagram with External VCO Inductor

Using an External VCO

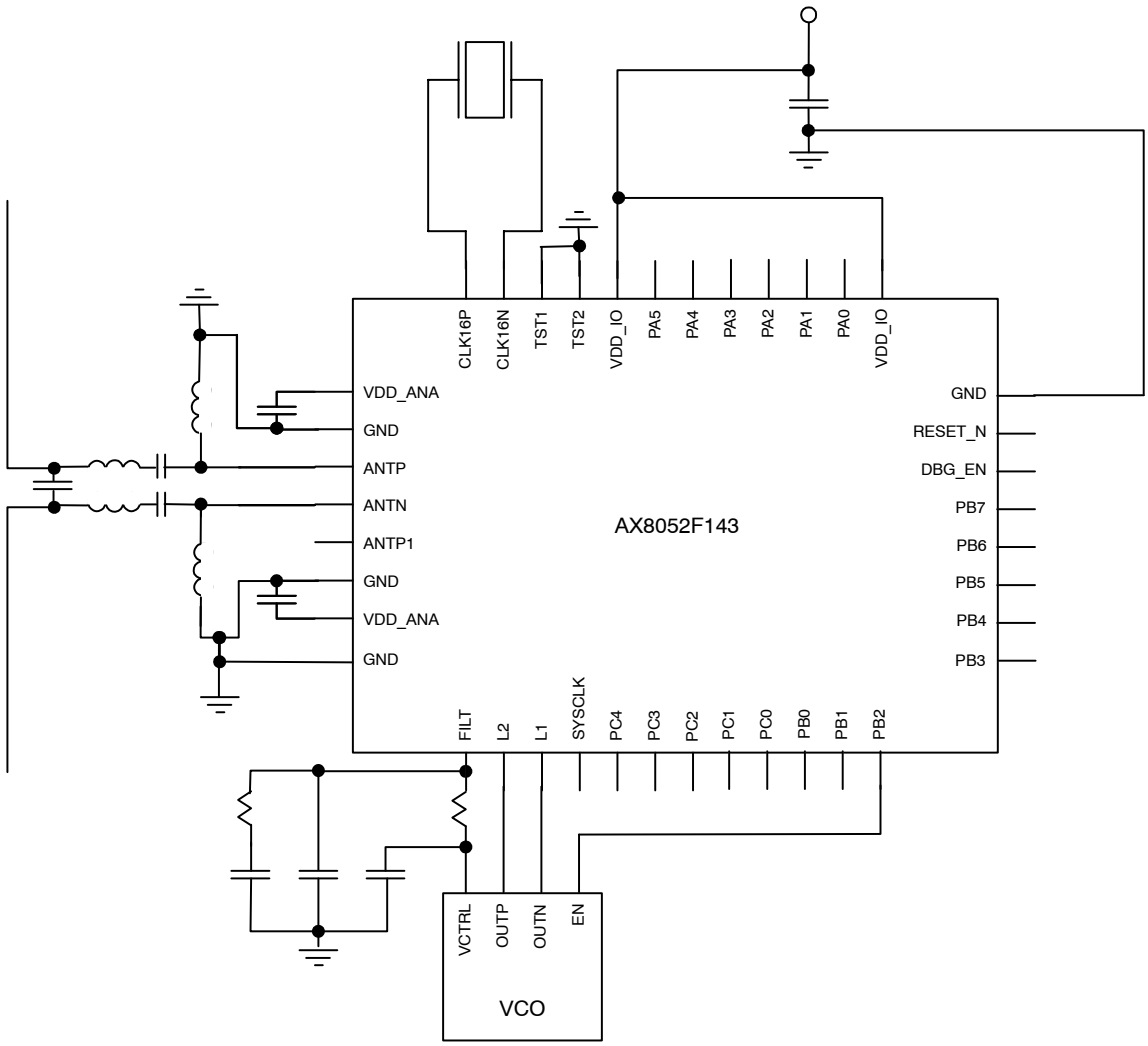

Figure 21. Typical Application Diagram with External VCO

Using a TCXO

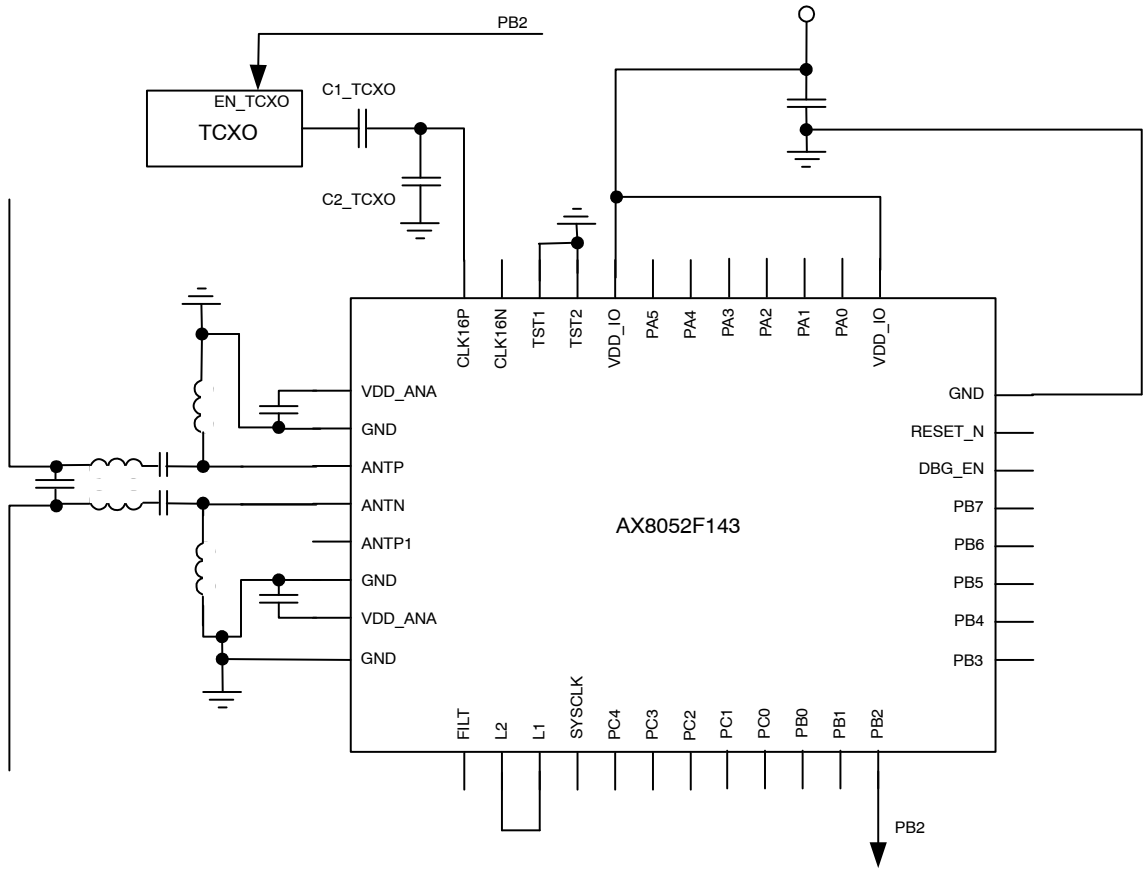

Figure 22. Typical Application Diagram with a TCXO

NOTE: For detailed TCXO network recommendations depending on TCXO output swing refer to the AX5043 Application Note: Use with a TCXO Reference Clock.

QFN40 PACKAGE INFORMATION

Package Outline QFN40 5 x 7 mm

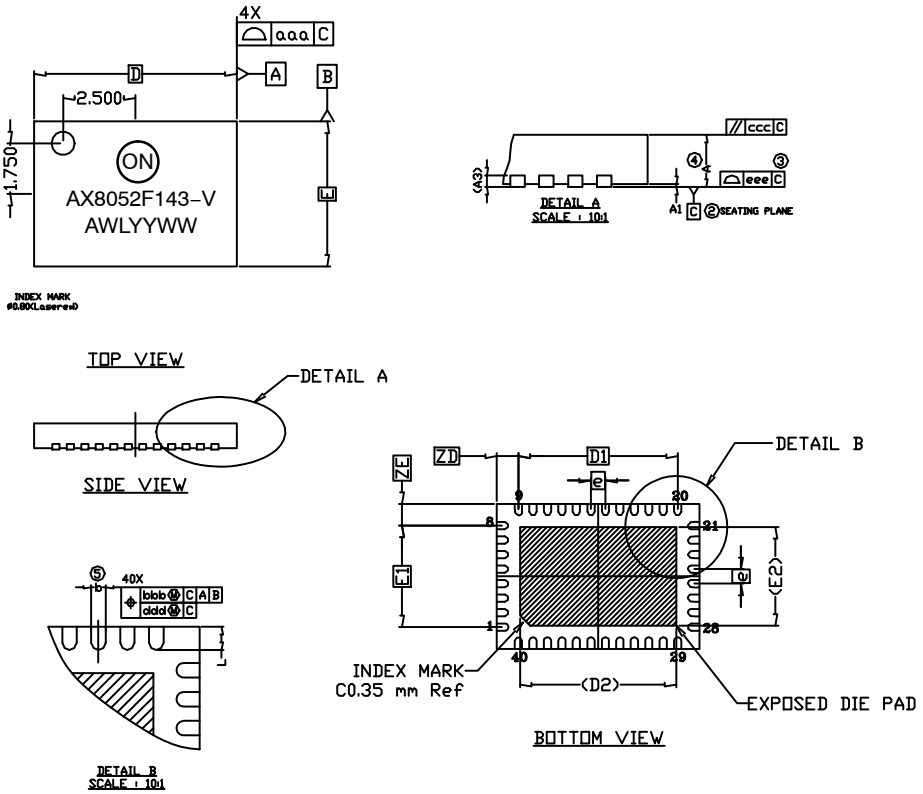

DIMENSIONAL REFERENCES Units: mm

REF.	Min.	Nom.	Max.
A	0.80	0.90	1.00
A1	0	0.02	0.05
A3	0.20 Ref		
D	7.00 BSC		
D1	5.50 BSC		
E	5.00 BSC		
E1	3.50 BSC		
e	0.50 BSC		
ZD	0.75 BSC		
ZE	0.75 BSC		

Units: mm

REF.	TOLERANCE OF FORM AND POSITION
aaa	0.15
bbb	0.10
ccc	0.10
ddd	0.05
eee	0.08

Units: mm

LF REF#.	Symbol	Min	Nom	Max
FR9020	b	0.18	0.25	0.30
	L	0.30	0.40	0.50
	D2	5.30	5.40	5.50
	E2	3.30	3.40	3.50

NOTES:
1. ‘e’ represents the basic terminal pitch
2. Datum ‘C’ is the mounting surface with which the package is in contact.
3. ‘3’ specifies the vertical shift of the flat part of each terminal from the mounting surface.
4. Dimension ‘A’ includes package warpage.
5. Dimension ‘b’ applies to the metallised terminal and is measured between 0.15 to 0.30 mm from the terminal tip. If the terminal has the optional radius on the other end of the terminal, the dimension ‘b’ should not be measured in the radius are
6. Package dimension take reference from JEDEC MO−220
7. AWLYYWW is the packaging lot code
8. V is the device version
9. RoHS

Figure 23. Package Outline QFN40 5 x 7 mm

QFN40 Soldering Profile

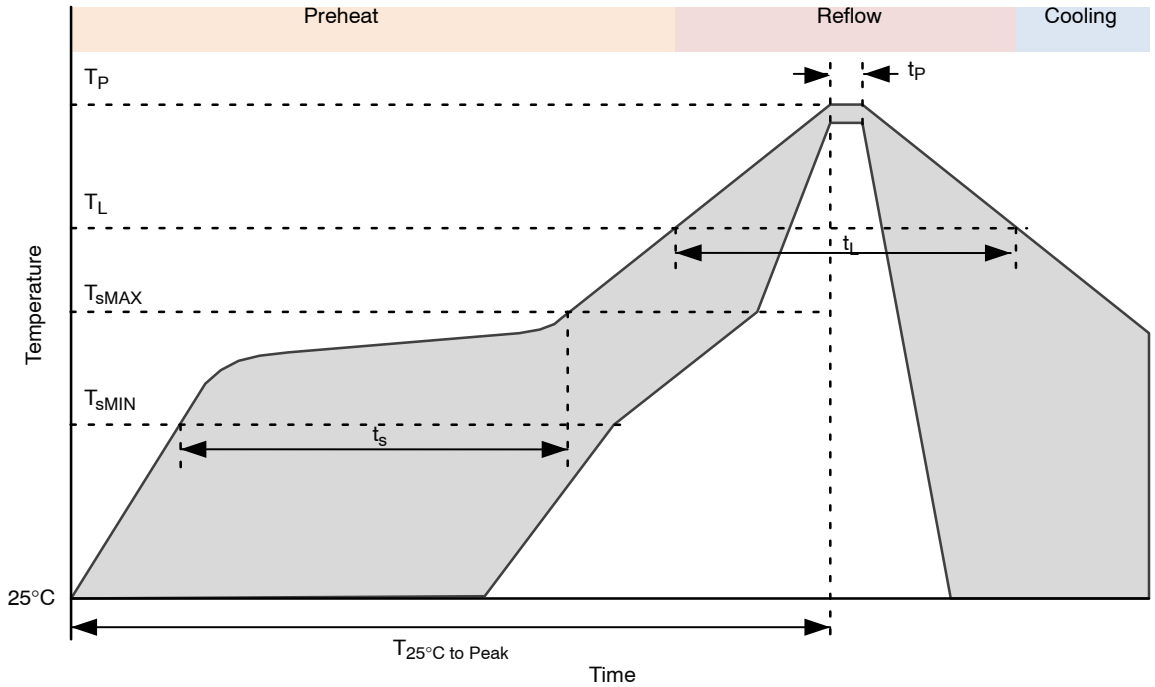

Figure 24. QFN40 Soldering Profile

Table 34.

Profile Feature		Pb−Free Process
Average Ramp−Up Rate		3°C/s max.
Preheat Preheat		
Temperature Min	T_{sMIN}	150°C
Temperature Max	T_{sMAX}	200°C
Time (T_{sMIN} to T_{sMAX})	t_s	60 – 180 sec
Time 25°C to Peak Temperature	$T_{25°C\ to\ Peak}$	8 min max.
Reflow Phase		
Liquidus Temperature	T_L	217°C
Time over Liquidus Temperature	t_L	60 – 150 s
Peak Temperature	t_p	260°C
Time within 5°C of actual Peak Temperature	T_p	20 – 40 s
Cooling Phase		
Ramp−down rate		6°C/s max.

1. All temperatures refer to the top side of the package, measured on the the package body surface.

QFN40 Recommended Pad Layout

1. PCB land and solder masking recommendations are shown in Figure 25.

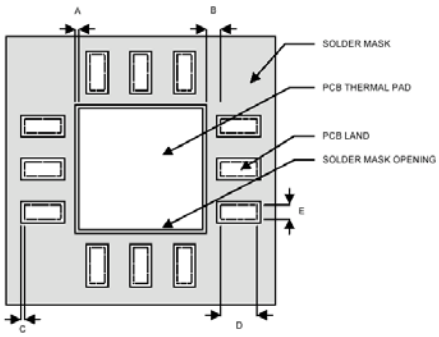

A = Clearance from PCB thermal pad to solder mask opening, 0.0635 mm minimum
B = Clearance from edge of PCB thermal pad to PCB land, 0.2 mm minimum
C = Clearance from PCB land edge to solder mask opening to be as tight as possible to ensure that some solder mask remains between PCB pads.
D = PCB land length = QFN solder pad length + 0.1 mm
E = PCB land width = QFN solder pad width + 0.1 mm

Figure 25. PCB Land and Solder Mask Recommendations

2. Thermal vias should be used on the PCB thermal pad (middle ground pad) to improve thermal conductivity from the device to a copper ground plane area on the reverse side of the printed circuit board. The number of vias depends on the package thermal requirements, as determined by thermal simulation or actual testing.
3. Increasing the number of vias through the printed circuit board will improve the thermal conductivity to the reverse side ground plane and external heat sink. In general, adding more metal through the PC board under the IC will improve operational heat transfer, but will require careful attention to uniform heating of the board during assembly.

Assembly Process

Stencil Design & Solder Paste Application

1. Stainless steel stencils are recommended for solder paste application.
2. A stencil thickness of 0.125 – 0.150 mm (5 – 6 mils) is recommended for screening.
3. For the PCB thermal pad, solder paste should be printed on the PCB by designing a stencil with an array of smaller openings that sum to 50% of the QFN exposed pad area. Solder paste should be applied through an array of squares (or circles) as shown in Figure 26.
4. The aperture opening for the signal pads should be between 50−80% of the QFN pad area as shown in Figure 27.
5. Optionally, for better solder paste release, the aperture walls should be trapezoidal and the corners rounded.
6. The fine pitch of the IC leads requires accurate alignment of the stencil and the printed circuit board. The stencil and printed circuit assembly should be aligned to within + 1 mil prior to application of the solder paste.
7. No−clean flux is recommended since flux from underneath the thermal pad will be difficult to clean if water−soluble flux is used.

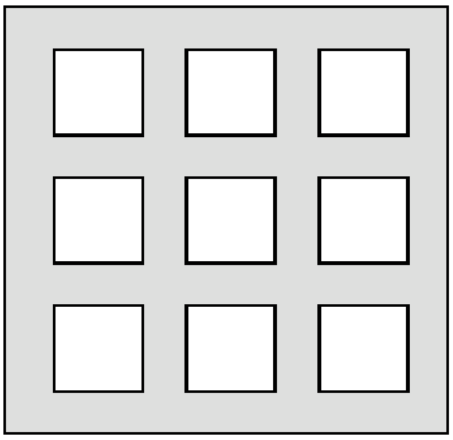

Figure 26. Solder Paste Application on Exposed Pad

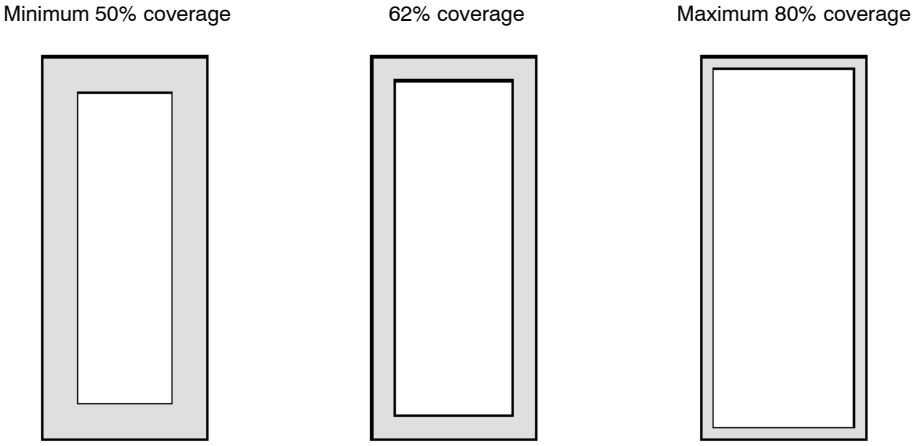

Figure 27. Solder Paste Application on Pins

Table 35. DEVICE VERSIONS

Device Marking	AX8052 Version	AX5043 Version
AX8052F143−1	1	1
AX8052F143−2	1C	1

ON Semiconductor and the ON are registered trademarks of Semiconductor Components Industries, LLC (SCILLC) or its subsidiaries in the United States and/or other countries. SCILLC owns the rights to a number of patents, trademarks, copyrights, trade secrets, and other intellectual property. A listing of SCILLC's product/patent coverage may be accessed at www.onsemi.com/site/pdf/Patent−Marking.pdf. SCILLC reserves the right to make changes without further notice to any products herein. SCILLC makes no warranty, representation or guarantee regarding the suitability of its products for any particular purpose, nor does SCILLC assume any liability arising out of the application or use of any product or circuit, and specifically disclaims any and all liability, including without limitation special, consequential or incidental damages. "Typical" parameters which may be provided in SCILLC data sheets and/or specifications can and do vary in different applications and actual performance may vary over time. All operating parameters, including "Typicals" must be validated for each customer application by customer's technical experts. SCILLC does not convey any license under its patent rights nor the rights of others. SCILLC products are not designed, intended, or authorized for use as components in systems intended for surgical implant into the body, or other applications intended to support or sustain life, or for any other application in which the failure of the SCILLC product could create a situation where personal injury or death may occur. Should Buyer purchase or use SCILLC products for any such unintended or unauthorized application, Buyer shall indemnify and hold SCILLC and its officers, employees, subsidiaries, affiliates, and distributors harmless against all claims, costs, damages, and expenses, and reasonable attorney fees arising out of, directly or indirectly, any claim of personal injury or death associated with such unintended or unauthorized use, even if such claim alleges that SCILLC was negligent regarding the design or manufacture of the part. SCILLC is an Equal Opportunity/Affirmative Action Employer. This literature is subject to all applicable copyright laws and is not for resale in any manner.

PUBLICATION ORDERING INFORMATION

LITERATURE FULFILLMENT:
Literature Distribution Center for ON Semiconductor
19521 E. 32nd Pkwy, Aurora, Colorado 80011 USA
Phone: 303−675−2175 or 800−344−3860 Toll Free USA/Canada
Fax: 303−675−2176 or 800−344−3867 Toll Free USA/Canada
Email: orderlit@onsemi.com

N. American Technical Support: 800−282−9855 Toll Free USA/Canada
Europe, Middle East and Africa Technical Support:
Phone: 421 33 790 2910
Japan Customer Focus Center
Phone: 81−3−5817−1050

ON Semiconductor Website: **www.onsemi.com**

Order Literature: http://www.onsemi.com/orderlit

For additional information, please contact your local Sales Representative

ООО «ЛайфЭлектроникс» “LifeElectronics” LLC

ИНН 7805602321 КПП 780501001 Р/С 40702810122510004610 ФАКБ "АБСОЛЮТ БАНК" (ЗАО) в г.Санкт-Петербурге К/С 30101810900000000703 БИК 044030703

Компания «Life Electronics» занимается поставками электронных компонентов импортного и отечественного производства от производителей и со складов крупных дистрибьюторов Европы, Америки и Азии.

С конца 2013 года компания активно расширяет линейку поставок компонентов по направлению коаксиальный кабель, кварцевые генераторы и конденсаторы (керамические, пленочные, электролитические), за счёт заключения дистрибьюторских договоров

Мы предлагаем:

- *Конкурентоспособные цены и скидки постоянным клиентам.*
- *Специальные условия для постоянных клиентов.*
- *Подбор аналогов.*
- *Поставку компонентов в любых объемах, удовлетворяющих вашим потребностям.*

- *Приемлемые сроки поставки, возможна ускоренная поставка.*
- *Доставку товара в любую точку России и стран СНГ.*
- *Комплексную поставку.*
- *Работу по проектам и поставку образцов.*
- *Формирование склада под заказчика.*

- *Сертификаты соответствия на поставляемую продукцию (по желанию клиента).*
- *Тестирование поставляемой продукции.*
- *Поставку компонентов, требующих военную и космическую приемку.*
- *Входной контроль качества.*
- *Наличие сертификата ISO.*

В составе нашей компании организован Конструкторский отдел, призванный помогать разработчикам, и инженерам.

Конструкторский отдел помогает осуществить:

- *Регистрацию проекта у производителя компонентов.*
- *Техническую поддержку проекта.*
- *Защиту от снятия компонента с производства.*
- *Оценку стоимости проекта по компонентам.*
- *Изготовление тестовой платы монтаж и пусконаладочные работы.*

Тел: +7 (812) 336 43 04 (многоканальный)
Email: org@lifeelectronics.ru

www.lifeelectronics.ru