3M™ Mini D Ribbon (MDR) Connectors

.050″ Boardmount Through-Hole Vertical Receptacle - Shielded 102 Series

- Wiper-on-wiper contact for reliable repetitive plugging
- Rugged die cast metal case construction
- Screw lockdown for reliable PCB retention
- Interface latch design for connection stability
- IEEE 1284C Interface as a 36 contact connector
- Contacts: 14, 20, 26, 36, 40, 50, 68, 80 and 100
- See Regulatory Information Appendix (RIA) for chemical compliance information.

Date Modified: November 26, 2007

TS-0427-B
Sheet 1 of 3

Physical

Insulation Material:	Glass Filled Polyester (PBT) or Glass Filled Polyester (PCT) - (High Temp. Option) - See ordering information
Flammability:	UL 94V-0
Color:	Black (PBT) or Beige (PCT)-High Temp. Option - See ordering information
Contact Material:	Copper Alloy
Plating Underplating:	100 μ″ [2.5 μm] Nickel
Wiping Area:	30 μ″ [0.76 μm] Min. Gold
Solder Tail Plating:	Gold flash over Nickel (RIA E1 & C1 apply)
Body Material:	Zinc Alloy
Plating:	Nickel
Shroud & Latch Hook	
Material:	Steel
Plating:	Nickel
Marking:	3M Logo and Part Number

Electrical

Current Rating:	1 A
Insulation Resistance:	$> 5 \times 10^8 \Omega$ at 500 V_{DC}
Withstanding Voltage:	500 V_{RMS} for 1 Minute

Environmental

Temperature Rating:	-20°C to +85°C
PBT Insulation Process Rating:	Solder Dip Test - 260°C for 10 secs., two times after 100°C max. preheat, 60 sec. max. duration.
PCT Insulation Process Rating:	**High Temp. Option:** 260°C (profile per J-STD-020C)

UL File No.: E68080

3M is a trademark of 3M Company.

3M™ Mini D Ribbon (MDR) Connectors

.050″ Boardmount Through-Hole Vertical Receptacle - Shielded 102 Series

Contact Quantity	Dim ensions				
	A	B	C	D	E
14	0.300 [7.62]	0.93 [23.6]	1.16 [29.5]	0.50 [12.6]	.77 [19.5]
20	0.450 [11.43]	1.08 [27.5]	1.31 [33.4]	.65 [16.4]	.92 [23.4]
26	.600 [15.24]	1.23 [31.3]	1.46 [37.2]	.80 [20.2]	1.07 [27.2]
36	.850 [21.59]	1.48 [37.6]	1.71 [43.5]	1.05 [26.6]	1.32 [33.5]
40	.950 [24.13]	1.58 [40.2]	1.81 [46.1]	1.15 [29.1]	1.42 [36.1]
50	1.200 [30.48]	1.83 [46.5]	2.06 [52.4]	1.40 [35.5]	1.67 [42.4]
68	1.650 [41.91]	2.28 [57.9]	2.51 [63.8]	1.85 [46.9]	2.12 [53.8]
80	1.950 [49.53]	2.58 [65.6]	2.81 [71.5]	2.15 [54.5]	2.42 [61.5]
100	2.450 [62.23]	3.08 [78.3]	3.31 [84.2]	2.65 [67.2]	2.92 [74.2]

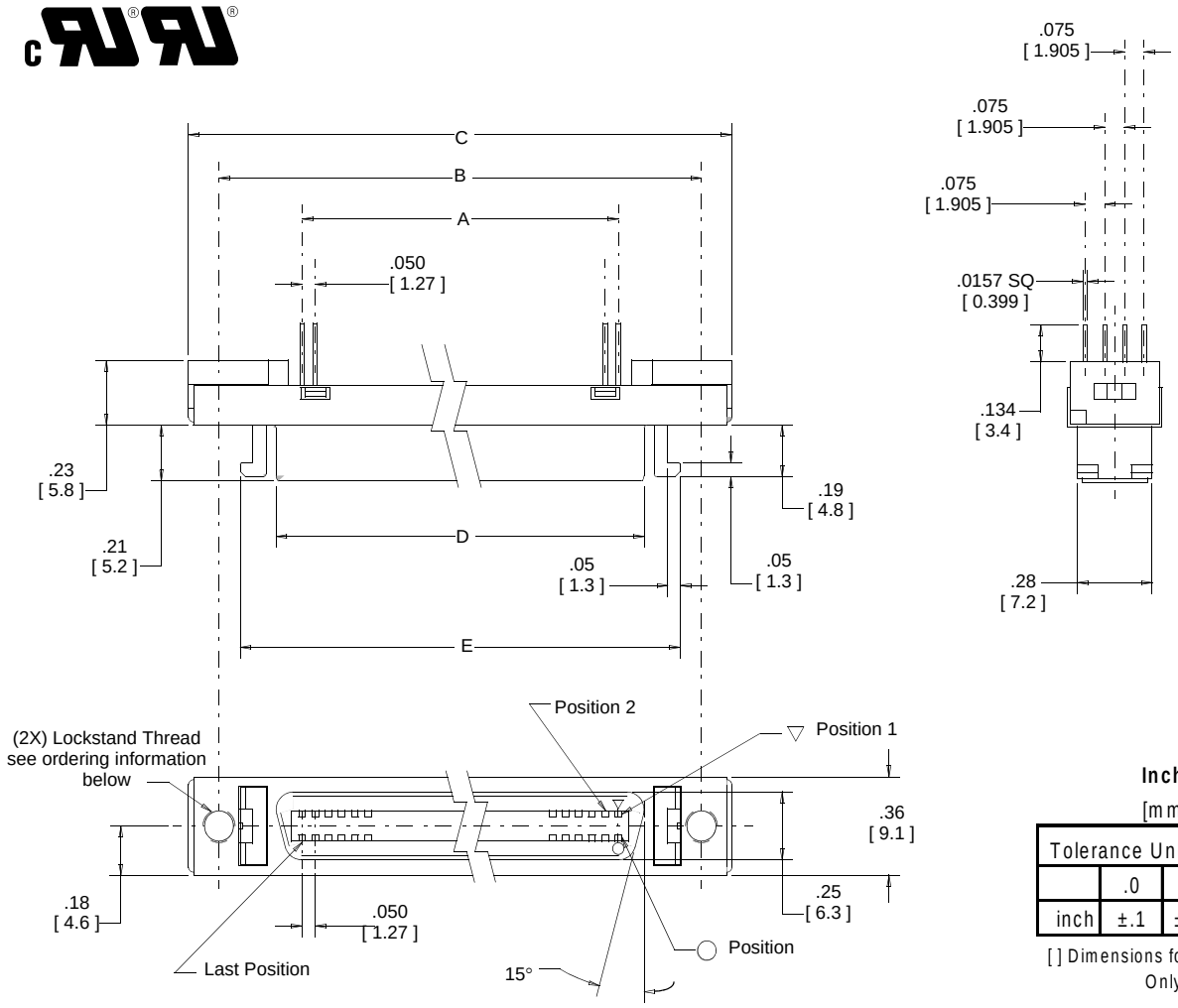

Inch
[mm]

Tolerance Unless Noted			
	.0	.00	.000
inch	±.1	±.01	±.005

[ ] Dimensions for Reference Only

Ordering Information

X 102 XX - 62 X 2 P C

Blank = Stand., PBT Insulator
N = High Temp. Option, PCT Insulator

Contact Quantity
(See Table)
A0 = 100 pos.

Lockstand Thread
0 = M 2.6 (Special)
1 = M 2.5 (Standard)

TS-0427-B
Sheet 2 of 3

3M is a trademark of 3M Company.

For technical, sales or ordering information call
800-225-5373

3M™ Mini D Ribbon (MDR) Connectors

.050″ Boardmount Through-Hole Vertical Receptacle - Shielded 102 Series

Contact Quantity	Dimensions	
	A	B
20	.450 [11.43]	1.081 [27.45]
36	.850 [21.59]	1.481 [37.61]
40	.950 [24.13]	1.581 [40.15]
68	1.650 [41.91]	2.281 [57.93]
80	1.950 [49.53]	2.581 [65.55]
100	2.450 [62.23]	3.081 [78.25]

Recommended Board Layout
Viewed from Connector Side

20, 36, 40, 68, 80 and 100 pos only

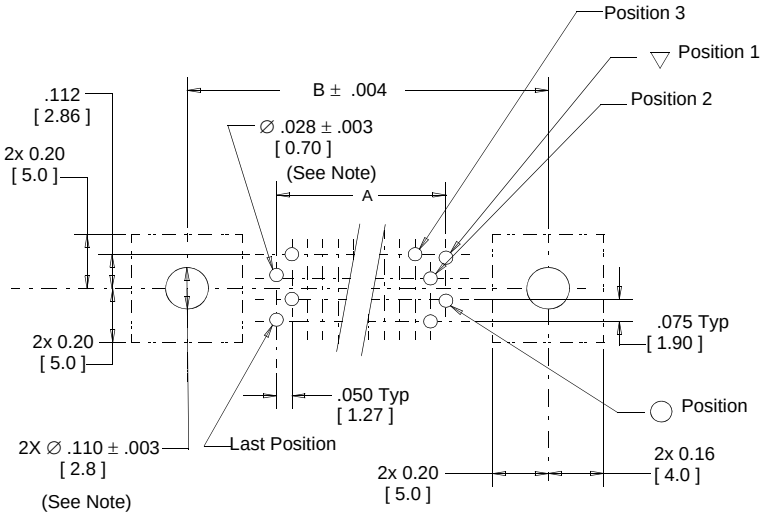

Contact Quantity	Dimensions	
	A	B
14	.300 [7.62]	0.931[23.64]
26	.600 [15.24]	1.231 [31.26]
50	1.200 [30.48]	1.831 [46.50]

14, 26, 50 pos only

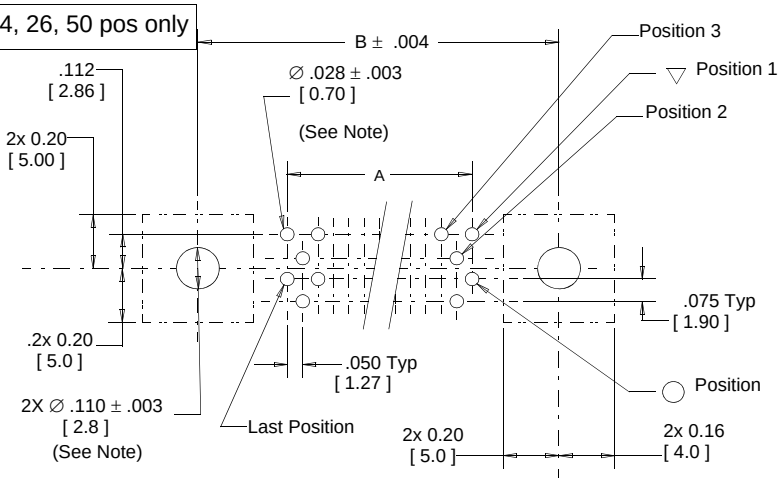

Note: Plated through holes for .062″ board thickness.

Contact Quantity	Dimensions	
	C	D
14	.78 [20.0]	.93 [23.64]
20	.94 [23.8]	1.08 [27.45]
26	1.09 [27.6]	1.23 [31.26]
36	1.33 [33.9]	1.48 [37.61]
40	1.44 [36.5]	1.58 [40.15]
50	1.69 [42.8]	1.83 [46.50]
68	2.13 [54.2]	2.28 [57.93]
80	2.44 [61.9]	2.58 [65.55]
100	2.94 [74.6]	3.08 [78.25]

Recommended Panel Cut-Out

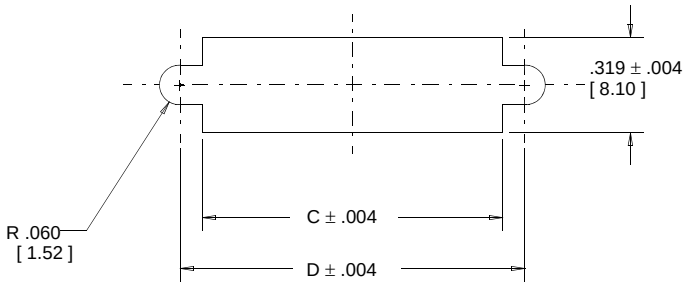

Note: Panel thickness .079 [2.00] Max.

TS-0427-B
Sheet 3 of 3

3M is a trademark of 3M Company.

Regulatory Information Appendix

3M Electronic Solutions Division/Interconnect

EUROPE

Appendix E1: European Union RoHS

Directive 2002/95/EC, Restriction of the Use of Certain Hazardous Substances in Electrical & Electronic Equipment, as amended by EU Commission Decision 2005/618/EC.
This product is RoHS Compliant 2005/95/EC.
"RoHS Compliant 2005/95/EC" means that the product or part ("Product") does not contain any of the substances in excess of the maximum concentration values in EU Directive 2002/95/EC, as amended by Commission Decision 2005/618/EC, unless the substance is in an application that is exempt under EU RoHS. Unless otherwise stated by 3M in writing, this information represents 3M's best knowledge and belief based upon information provided by third party suppliers to 3M.

In the event any product is proven not to conform with 3M's Regulatory Information Appendix, then 3M's entire liability and Buyer's exclusive remedy will be in accordance with the Warranty stated below.

Appendix E2: European Union RoHS

Directive 2002/95/EC, Restriction of the Use of Certain Hazardous Substances in Electrical & Electronic Equipment, as amended by EU Commission Decision 2005/618/EC.
This product contains lead in the compliant pin area in excess of the maximum concentration value allowed but is compliant by exemption under EU Commission Decision 2005/747/EC.
"RoHS Compliant 2005/95/EC" means that the product or part ("Product") does not contain any of the substances in excess of the maximum concentration values in EU Directive 2002/95/EC, as amended by Commission Decision 2005/618/EC, unless the substance is in an application that is exempt under EU RoHS. Unless otherwise stated by 3M in writing, this information represents 3M's best knowledge and belief based upon information provided by third party suppliers to 3M.

In the event any product is proven not to conform with 3M's Regulatory Information Appendix, then 3M's entire liability and Buyer's exclusive remedy will be in accordance with the Warranty stated below.

Appendix E3: European Union RoHS

Directive 2002/95/EC, Restriction of the Use of Certain Hazardous Substances in Electrical & Electronic Equipment as amended by Commission Decision 2005/618/EC.
This product contains lead in the solder tail area in excess of the maximum concentration value allowed.
Unless otherwise stated by 3M in writing, this information represents 3M's best knowledge and belief based upon information provided by third party suppliers to 3M.

In the event any product is proven not to conform with 3M's Regulatory Information Appendix, then 3M's entire liability and Buyer's exclusive remedy will be in accordance with the Warranty stated below.

Appendix E4: European Union RoHS

Directive 2002/95/EC, Restriction of the Use of Certain Hazardous Substances in Electrical & Electronic Equipment, as amended by EU Commission Decision 2005/618/EC.
This product contains decaBDE in the insulating material in excess of the maximum concentration value allowed but is compliant by exemption under EU Commission Decision 2005/717/EC.
"RoHS Compliant 2005/95/EC" means that the product or part ("Product") does not contain any of the substances in excess of the maximum concentration values in EU Directive 2002/95/EC, as amended by Commission Decision 2005/618/EC, unless the substance is in an application that is exempt under EU RoHS. Unless otherwise stated by 3M in writing, this information represents 3M's best knowledge and belief based upon information provided by third party suppliers to 3M.

In the event any product is proven not to conform with 3M's Regulatory Information Appendix, then 3M's entire liability and Buyer's exclusive remedy will be in accordance with the Warranty stated below.

Appendix E5: European Union RoHS

Directive 2002/95/EC, Restriction of the Use of Certain Hazardous Substances in Electrical and Electronic Equipment, as amended by EU Commission Decision 2005/618/EC.

This product contains lead in excess of the maximum concentration value allowed but is compliant by exemption under Item 6 of the Annex to the Directive.

"RoHS Compliant 2005/95/EC" means that the product or part ("Product") does not contain any of the substances in excess of the maximum concentration values in EU Directive 2002/95/EC, as amended by Commission Decision 2005/618/EC, unless the substance is in an application that is exempt under EU RoHS. Unless otherwise stated by 3M in writing, this information represents 3M's best knowledge and belief based upon information provided by third party suppliers to 3M.

In the event any product is proven not to conform with 3M's Regulatory Information Appendix, then 3M's entire liability and Buyer's exclusive remedy will be in accordance with the Warranty stated below.

CHINA

Appendix C1: China RoHS

Electronic Industry Standard of the People's Republic of China, SJ/T11363-2006, Requirements for Concentration Limits for Certain Hazardous Substances in Electronic Information Products.
This symbol, per Marking for the Control of Pollution Caused by Electronic Information Products, SJ/T11364-2006, means that the product or part **does not** contain any of the following substances in excess of the following maximum concentration values in any homogeneous material: (a) 0.1% (by weight) for lead, mercury, hexavalent chromium, polybrominated biphenyls or polybrominated diphenyl ethers; or (b) 0.01% (by weight) for cadmium. Unless otherwise stated by 3M in writing, this information represents 3M's best knowledge and belief based upon information provided by third party suppliers to 3M.

In the event any product is proven not to conform with 3M's Regulatory Information Appendix, then 3M's entire liability and Buyer's exclusive remedy will be in accordance with the Warranty stated below.

Appendix C2: China RoHS

Electronic Industry Standard of the People's Republic of China, SJ/T11363-2006, Requirements for Concentration Limits for Certain Hazardous Substances in Electronic Information Products.
This symbol, per Marking for the Control of Pollution Caused by Electronic Information Products, SJ/T11364-2006, means that the product or part **does** contain a substance, as detailed in the chart below, in excess of the following maximum concentration values in any homogeneous material: (a) 0.1% (by weight) for lead, mercury, hexavalent chromium, polybrominated biphenyls or polybrominated diphenyl ethers; or (b) 0.01% (by weight) for cadmium. Unless otherwise stated by 3M in writing, this information represents 3M's best knowledge and belief based upon information provided by third party suppliers to 3M.

The numerical reference in the symbol above should not be construed as a representation regarding the product's life or an extension of a product warranty. The product warranty is stated below. In the event any product is proven not to conform with 3M's Regulatory Information Appendix, then 3M's entire liability and Buyer's exclusive remedy will be in accordance with the product Warranty stated below.

产品中有毒有害物质或元素的名称及含量 Name and Content of Hazardous Substances or Elements

部件名称 (Part or Component Name)	有毒有害物质或元素 (Hazardous Substances or Elements)					
	铅(Pb)	汞 (Hg)	镉 (Cd)	六价铬 (Cr(VI))	多溴联苯 (PBB)	多溴二苯醚 (PBDE)
端子镀层(contact plating)	×	○	○	○	○	○

○：表示该有毒有害物质在该部件所有均质材料中的含量均在SJ/T11363-2006 标准规定的限量要求以下。(Indicates that this hazardous substance contained in all of the homogeneous materials for this part is below the limit requirement in SJ/T11363-2006.)
×：表示该有毒有害物质至少在该部件的某一均质材料中的含量超出SJ/T11363-2006 标准规定的限量要求。(Indicates that this hazardous substance contained in at least one of the homogeneous materials used for this part is above the limit requirement in SJ/T11363-2006.)

Appendix C3: China RoHS

Electronic Industry Standard of the People's Republic of China, SJ/T11363-2006, Requirements for Concentration Limits for Certain Hazardous Substances in Electronic Information Products.

This symbol, per Marking for the Control of Pollution Caused by Electronic Information Products, SJ/T11364-2006, means that the product or part **does** contain a substance, as detailed in the chart below, in excess of the following maximum concentration values in any homogeneous material: (a) 0.1% (by weight) for lead, mercury, hexavalent chromium, polybrominated biphenyls or polybrominated diphenyl ethers; or (b) 0.01% (by weight) for cadmium. Unless otherwise stated by 3M in writing, this information represents 3M's best knowledge and belief based upon information provided by third party suppliers to 3M.

The numerical reference in the symbol above should not be construed as a representation regarding the product's life or an extension of a product warranty. The product warranty is stated below. In the event any product is proven not to conform with 3M's Regulatory Information Appendix, then 3M's entire liability and Buyer's exclusive remedy will be in accordance with the product Warranty stated below.

产品中有毒有害物质或元素的名称及含量 Name and Content of Hazardous Substances or Elements

部件名称 (Part or Component Name)	有毒有害物质或元素 (Hazardous Substances or Elements)					
	铅(Pb)	汞 (Hg)	镉 (Cd)	六价铬 (Cr(VI))	多溴联苯 (PBB)	多溴二苯醚 (PBDE)
合金(Metal alloy)	×	○	○	○	○	○

○：表示该有毒有害物质在该部件所有均质材料中的含量均在SJ/T11363-2006 标准规定的限量要求以下。(Indicates that this hazardous substance contained in all of the homogeneous materials for this part is below the limit requirement in SJ/T11363-2006.)
×：表示该有毒有害物质至少在该部件的某一均质材料中的含量超出SJ/T11363-2006 标准规定的限量要求。(Indicates that this hazardous substance contained in at least one of the homogeneous materials used for this part is above the limit requirement in SJ/T11363-2006.)

Important Notice

All statements, technical information, and recommendations related to 3M's products are based on information believed to be reliable, but the accuracy or completeness is not guaranteed. Before using this product, you must evaluate it and determine if it is suitable for your intended application. You assume all risks and liability associated with such use. Any statements related to the product which are not contained in 3M's current publications, or any contrary statements contained on your purchase order shall have no force or effect unless expressly agreed upon, in writing, by an authorized officer of 3M.

Warranty; Limited Remedy; Limited Liability.

This product will be free from defects in material and manufacture for a period of one (1) year from the time of purchase. **3M MAKES NO OTHER WARRANTIES INCLUDING, BUT NOT LIMITED TO, ANY IMPLIED WARRANTY OF MERCHANTABILITY OR FITNESS FOR A PARTICULAR PURPOSE.** If this product is defective within the warranty period stated above, your exclusive remedy shall be, at 3M's option, to replace or repair the 3M product or refund the purchase price of the 3M product. **Except where prohibited by law, 3M will not be liable for any indirect, special, incidental or consequential loss or damage arising from this 3M product, regardless of the legal theory asserted.**

3M Electronics
Interconnect Products
6801 River Place Blvd.
Austin, TX 78726-9000
U.S.A.
1-800-225-5373
www.3m.com/interconnects

Please recycle. Printed in USA.
© 3M 2007. All rights reserved.
RIA-2217B-c

3M is a trademark of 3M Company.

ООО «ЛайфЭлектроникс» “LifeElectronics” LLC

ИНН 7805602321 КПП 780501001 Р/С 40702810122510004610 ФАКБ "АБСОЛЮТ БАНК" (ЗАО) в г.Санкт-Петербурге К/С 30101810900000000703 БИК 044030703

Компания «Life Electronics» занимается поставками электронных компонентов импортного и отечественного производства от производителей и со складов крупных дистрибьюторов Европы, Америки и Азии.

С конца 2013 года компания активно расширяет линейку поставок компонентов по направлению коаксиальный кабель, кварцевые генераторы и конденсаторы (керамические, пленочные, электролитические), за счёт заключения дистрибьюторских договоров

Мы предлагаем:

- *Конкурентоспособные цены и скидки постоянным клиентам.*
- *Специальные условия для постоянных клиентов.*
- *Подбор аналогов.*
- *Поставку компонентов в любых объемах, удовлетворяющих вашим потребностям.*

- *Приемлемые сроки поставки, возможна ускоренная поставка.*
- *Доставку товара в любую точку России и стран СНГ.*
- *Комплексную поставку.*
- *Работу по проектам и поставку образцов.*
- *Формирование склада под заказчика.*

- *Сертификаты соответствия на поставляемую продукцию (по желанию клиента).*
- *Тестирование поставляемой продукции.*
- *Поставку компонентов, требующих военную и космическую приемку.*
- *Входной контроль качества.*
- *Наличие сертификата ISO.*

В составе нашей компании организован Конструкторский отдел, призванный помогать разработчикам, и инженерам.

Конструкторский отдел помогает осуществить:

- *Регистрацию проекта у производителя компонентов.*
- *Техническую поддержку проекта.*
- *Защиту от снятия компонента с производства.*
- *Оценку стоимости проекта по компонентам.*
- *Изготовление тестовой платы монтаж и пусконаладочные работы.*

Тел: +7 (812) 336 43 04 (многоканальный)
Email: org@lifeelectronics.ru

www.lifeelectronics.ru