THIS DRAWING IS UNPUBLISHED. RELEASED FOR PUBLICATION AUG ,2006.
© COPYRIGHT – BY TYCO ELECTRONICS CORPORATION. ALL RIGHTS RESERVED.

LOC	DIST
DW	—

REVISIONS

P	LTR	DESCRIPTION	DATE	DWN	APVD
	F6	REVISED (ECR-12-013183) TO IDENTIFY PCI-E SPEC GEN II & GEN III FOR EACH P/N	26JUL'12	E.L.	W.K.

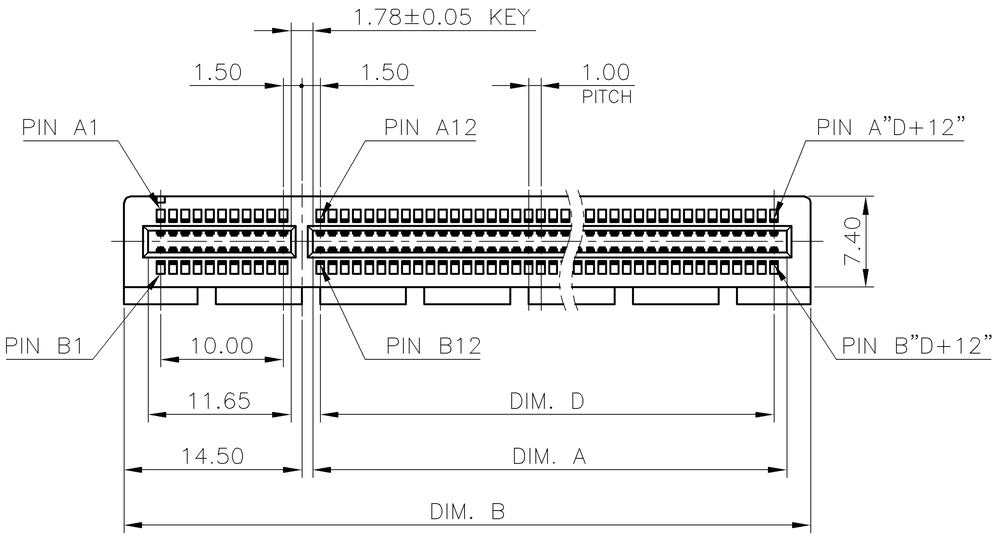

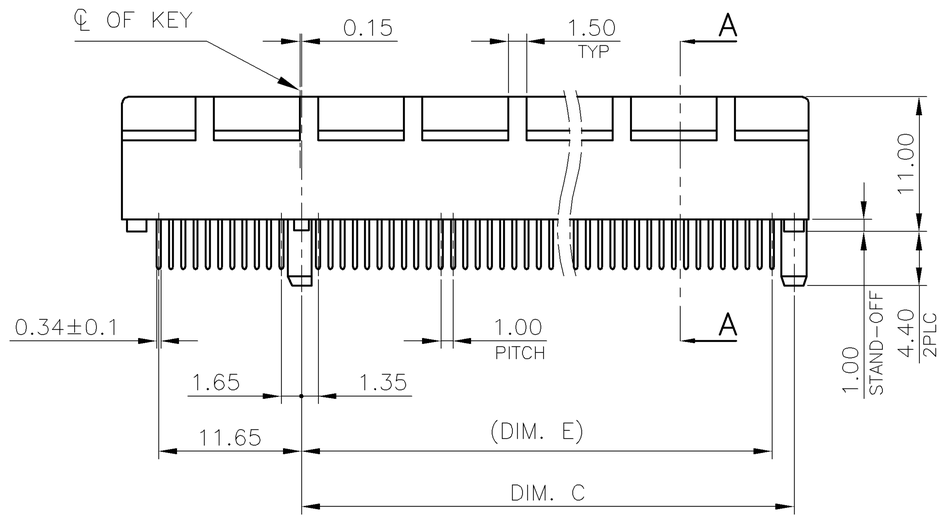

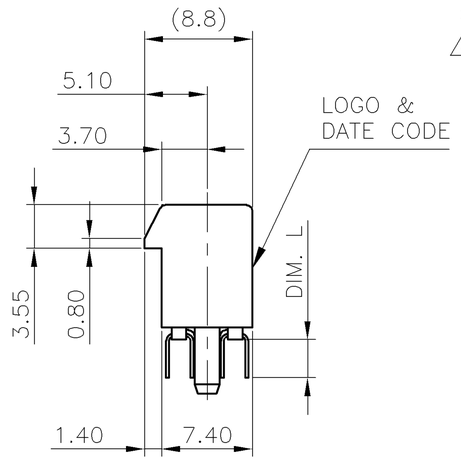

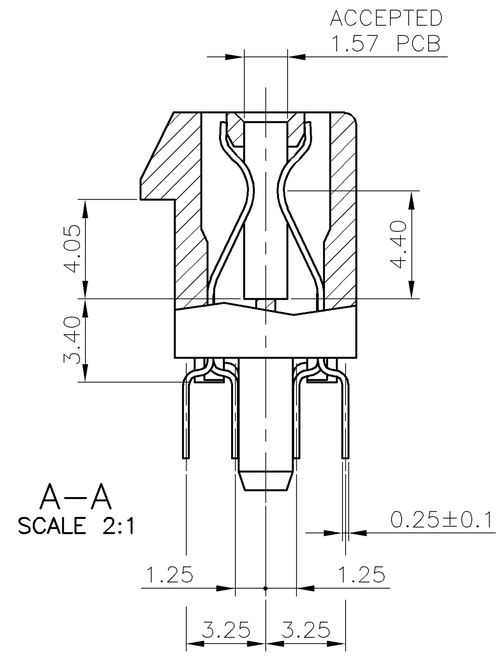

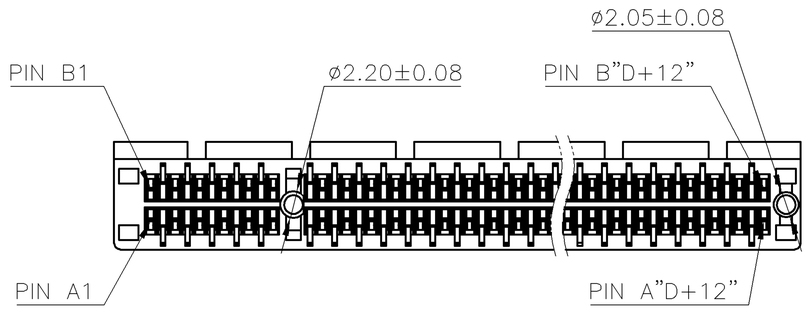

NOTES:

1. MATERIAL:
   1.1 HOUSING: 1.PA46 WITH 40% G.F, UL94 V-0, COLOR: SEE TABLE.
   2.PA9T WITH 30% GF, UL94 V-0, COLOR: SEE TABLE.
   1.2 CONTACT: PHOSPHOR BRONZE
2. FINISH:
   CONTACT: (SEE TABLE) GOLD PLATING ON CONTACT AREA.
   2.54um [100u"] MIN. MATTE-TIN PALTING ON SOLDER TAIL AREA.
   1.27um [50u"] MIN. NICKEL UNDERPLATING OVERALL.
3. CONNECTOR HAS MET THE REQUIREMENTS PER PCI EXPRESS GEN 2 TECHNICAL DOCUMENT.
4. WEIGHT:
   36 POS.: 2.55 GRAMS; 64 POS.: 3.90 GRAMS
   98 POS.: 5.50 GRAMS; 164 POS.: 8.80 GRAMS
5. WAVE SOLDER CAPABLE TO 265°C PER TEST SPEC. 109-202 CONDITION B.
6. REFLOW SOLDER CAPABLE TO 260°C PER TEST SPEC. 109-201 CONDITION B. (REFLOW SOLDERING PLEASE USE PN : 1734774-1 TO 4-1734774-8)

THIS DRAWING IS A CONTROLLED DOCUMENT.

DIMENSIONS: MM

TOLERANCES UNLESS OTHERWISE SPECIFIED:

0 PLC	± –
1 PLC	± 0.3
2 PLC	± 0.2
3 PLC	± 0.15
4 PLC	± –
ANGLES	± 3°

MATERIAL: SEE NOTE

FINISH: SEE NOTE

DWN	B. HSING	15JUL2009
CHK	S. CHIEN	15JUL2009
APVD	W. KODAMA	15JUL2009

PRODUCT SPEC: 108-57871

APPLICATION SPEC: —

WEIGHT: SEE NOTE 4

CUSTOMER DRAWING

TE Connectivity

NAME: PCI EXPRESS CARD EDGE CONNECTOR VERTICAL, DIP TYPE, 3GIO

SIZE	CAGE CODE	DRAWING NO	RESTRICTED TO
A3	00779	C-1734774	—

SCALE: — SHEET 1 OF 4 REV F6

THIS DRAWING IS UNPUBLISHED. RELEASED FOR PUBLICATION AUG ,2006.
© COPYRIGHT – BY TYCO ELECTRONICS CORPORATION. ALL RIGHTS RESERVED.

LOC	DIST
DW	–

REVISIONS

P	LTR	DESCRIPTION	DATE	DWN	APVD
		SEE SHEET 1.			

WEIGHT(g)	PCI–E COMPLIANCE	HOUSING MATERIAL	DIM. L	DIM. E	DIM. D	DIM. C	DIM. B	DIM. A	POS.	HOUSING COLOR	MIN. GOLD THICKNESS	PART NUMBER
8.7	GEN II & GEN III	6 PA9T	2.30	71.35	70	73.15	89	71.65	164	BLACK	30u"	4–1734774–8
										WHITE		4–1734774–7
5.45				38.35	37	40.15	56	38.65	98	BLACK		4–1734774–6
										WHITE		4–1734774–5
3.85				21.35	20	23.15	39	21.65	64	BLACK		4–1734774–4
										WHITE		4–1734774–3
2.55				7.35	6	9.15	25	7.65	36	BLACK		4–1734774–2
										WHITE		4–1734774–1
8.7				71.35	70	73.15	89	71.65	164	BLACK	15u"	4–1734774–0
											G/F	3–1734774–9
										WHITE	15u"	3–1734774–8
											G/F	3–1734774–7
5.45				38.35	37	40.15	56	38.65	98	BLACK	15u"	3–1734774–6
											G/F	3–1734774–5
										WHITE	15u"	3–1734774–4
											G/F	3–1734774–3
3.85				21.35	20	23.15	39	21.65	64	BLACK	15u"	3–1734774–2
											G/F	3–1734774–1
										WHITE	15u"	3–1734774–0
											G/F	2–1734774–9
2.55				7.35	6	9.15	25	7.65	36	BLACK	15u"	2–1734774–8
											G/F	2–1734774–7
										WHITE	15u"	2–1734774–6
											G/F	2–1734774–5
8.7			3.10	71.35	70	73.15	89	71.65	164	BLACK	30u"	2–1734774–4
										WHITE		2–1734774–3
5.45				38.35	37	40.15	56	38.65	98	BLACK		2–1734774–2
										WHITE		2–1734774–1
3.85				21.35	20	23.15	39	21.65	64	BLACK		2–1734774–0
										WHITE		1–1734774–9
2.55				7.35	6	9.15	25	7.65	36	BLACK		1–1734774–8
										WHITE		1–1734774–7
8.7				71.35	70	73.15	89	71.65	164	BLACK	15u"	1–1734774–6
											G/F	1–1734774–5
										WHITE	15u"	1–1734774–4
											G/F	1–1734774–3
5.45				38.35	37	40.15	56	38.65	98	BLACK	15u"	1–1734774–2
											G/F	1–1734774–1
										WHITE	15u"	1–1734774–0
											G/F	1734774–9
3.85				21.35	20	23.15	39	21.65	64	BLACK	15u"	1734774–8
											G/F	1734774–7
										WHITE	15u"	1734774–6
											G/F	1734774–5
2.55				7.35	6	9.15	25	7.65	36	BLACK	15u"	1734774–4
											G/F	1734774–3
										WHITE	15u"	1734774–2
											G/F	1734774–1

WEIGHT(g)	PCI–E COMPLIANCE	HOUSING MATERIAL	DIM. L	DIM. E	DIM. D	DIM. C	DIM. B	DIM. A	POS.	HOUSING COLOR	MIN. GOLD THICKNESS	PART NUMBER
8.8	GEN II	PA46	2.30	71.35	70	73.15	89	71.65	164	BLACK	30u"	9–1734774–7
										WHITE		9–1734774–6
5.5				38.35	37	40.15	56	38.65	98	BLACK		9–1734774–5
										WHITE		9–1734774–4
3.9				21.35	20	23.15	39	21.65	64	BLACK		9–1734774–3
										WHITE		9–1734774–2
2.55				7.35	6	9.15	25	7.65	36	BLACK		9–1734774–1
										WHITE		9–1734774–0
8.8				71.35	70	73.15	89	71.65	164	BLACK	15u"	8–1734774–9
											G/F	8–1734774–8
										WHITE	15u"	8–1734774–7
											G/F	8–1734774–6
5.5				38.35	37	40.15	56	38.65	98	BLACK	15u"	8–1734774–5
											G/F	8–1734774–4
										WHITE	15u"	8–1734774–3
											G/F	8–1734774–2
3.9				21.35	20	23.15	39	21.65	64	BLACK	15u"	8–1734774–1
											G/F	8–1734774–0
										WHITE	15u"	7–1734774–9
											G/F	7–1734774–8
2.55				7.35	6	9.15	25	7.65	36	BLACK	15u"	7–1734774–7
											G/F	7–1734774–6
										WHITE	15u"	7–1734774–5
											G/F	7–1734774–4
8.8			3.10	71.35	70	73.15	89	71.65	164	BLACK	30u"	7–1734774–3
										WHITE		7–1734774–2
5.5				38.35	37	40.15	56	38.65	98	BLACK		7–1734774–1
										WHITE		7–1734774–0
3.9				21.35	20	23.15	39	21.65	64	BLACK		6–1734774–9
										WHITE		6–1734774–8
2.55				7.35	6	9.15	25	7.65	36	BLACK		6–1734774–7
										WHITE		6–1734774–6
8.8				71.35	70	73.15	89	71.65	164	BLACK	15u"	6–1734774–5
											G/F	6–1734774–4
										WHITE	15u"	6–1734774–3
											G/F	6–1734774–2
5.5				38.35	37	40.15	56	38.65	98	BLACK	15u"	6–1734774–1
											G/F	6–1734774–0
										WHITE	15u"	5–1734774–9
											G/F	5–1734774–8
3.9				21.35	20	23.15	39	21.65	64	BLACK	15u"	5–1734774–7
											G/F	5–1734774–6
										WHITE	15u"	5–1734774–5
											G/F	5–1734774–4
2.55				7.35	6	9.15	25	7.65	36	BLACK	15u"	5–1734774–3
											G/F	5–1734774–2
										WHITE	15u"	5–1734774–1
											G/F	5–1734774–0

THIS DRAWING IS A CONTROLLED DOCUMENT.

DIMENSIONS: MM

TOLERANCES UNLESS OTHERWISE SPECIFIED:

0 PLC	± –
1 PLC	± 0.3
2 PLC	± 0.2
3 PLC	± 0.15
4 PLC	± –
ANGLES	± 3°

MATERIAL –

FINISH –

DWN –
CHK –
APVD –
PRODUCT SPEC –
APPLICATION SPEC –
WEIGHT –

TE Connectivity

NAME

PCI EXPRESS CARD EDGE CONNECTOR
VERTICAL, DIP TYPE, 3GIO

SIZE	CAGE CODE	DRAWING NO	RESTRICTED TO
A3	00779	C–1734774	–

CUSTOMER DRAWING | SCALE – | SHEET 2 OF 4 | REV F6

THIS DRAWING IS UNPUBLISHED. RELEASED FOR PUBLICATION AUG ,2006.
© COPYRIGHT – BY TYCO ELECTRONICS CORPORATION. ALL RIGHTS RESERVED.

LOC	DIST
DW	—

REVISIONS

P	LTR	DESCRIPTION	DATE	DWN	APVD
		SEE SHEET 1.			

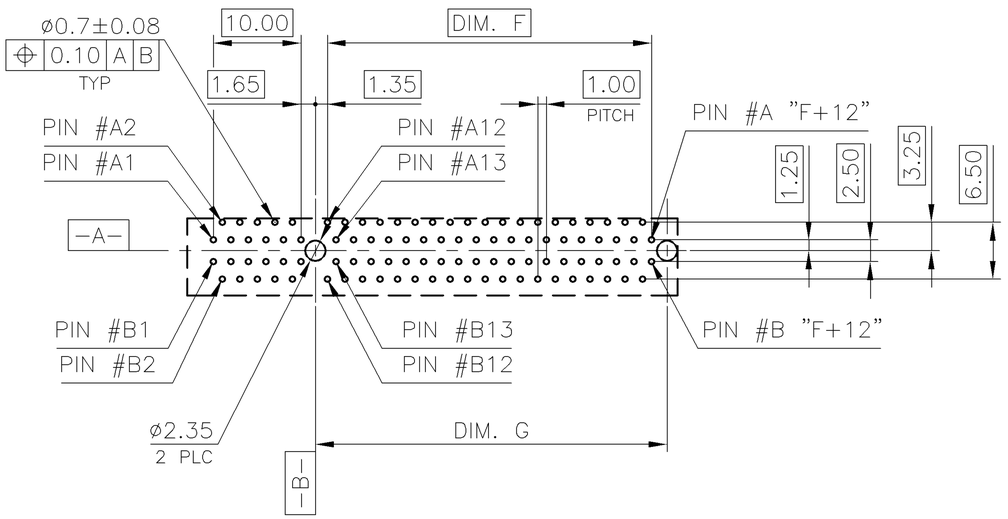

RECOMMENDED PCB LAYOUT

TOLERANCE: ±0.05
FOR DIM.L=3.1mm PCB THICKNESS: 2.4mm
FOR DIM.L=2.3mm PCB THICKNESS: 1.6mm

ADD–IN CARD EDGE–FINGER DIMENSIONS

NOTES:
CHAMFER EDGE MUST BE FREE OF CUTTING BURRS

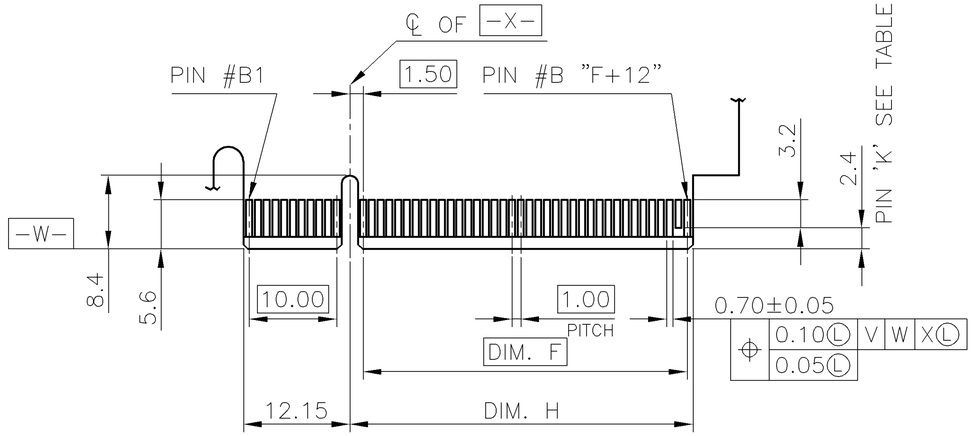

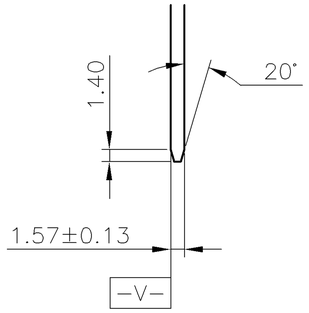

← I/O PANEL DIRECTION
PRIMARY (COMPONENT) SIDE

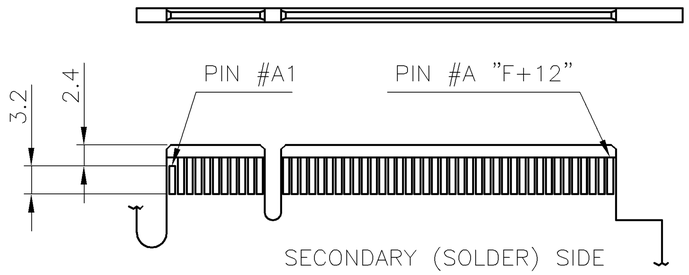

POS.	DIM. F	DIM. G	DIM. H	"K"
164	70.0	73.15	72.15	B17, B31, B48, B81
98	37.0	40.15	39.15	B17, B31, B48
64	20.0	23.15	22.15	B17, B31
36	6.0	9.15	8.15	B17

THIS DRAWING IS A CONTROLLED DOCUMENT.

DIMENSIONS: MM

TOLERANCES UNLESS OTHERWISE SPECIFIED:
0 PLC ± –
1 PLC ± –
2 PLC ± –
3 PLC ± –
4 PLC ± –
ANGLES ± –

MATERIAL –
FINISH –

DWN –
CHK –
APVD –
PRODUCT SPEC —
APPLICATION SPEC —
WEIGHT —

TE Connectivity

NAME
PCI EXPRESS CARD EDGE CONNECTOR
VERTICAL, DIP TYPE, 3GIO

SIZE	CAGE CODE	DRAWING NO	RESTRICTED TO
A3	00779	C–1734774	—

CUSTOMER DRAWING | SCALE — | SHEET 3 OF 4 | REV F6

THIS DRAWING IS UNPUBLISHED. RELEASED FOR PUBLICATION AUG ,2006.
© COPYRIGHT – BY TYCO ELECTRONICS CORPORATION. ALL RIGHTS RESERVED.

LOC	DIST
DW	—

REVISIONS

P	LTR	DESCRIPTION	DATE	DWN	APVD
		SEE SHEET 1.			

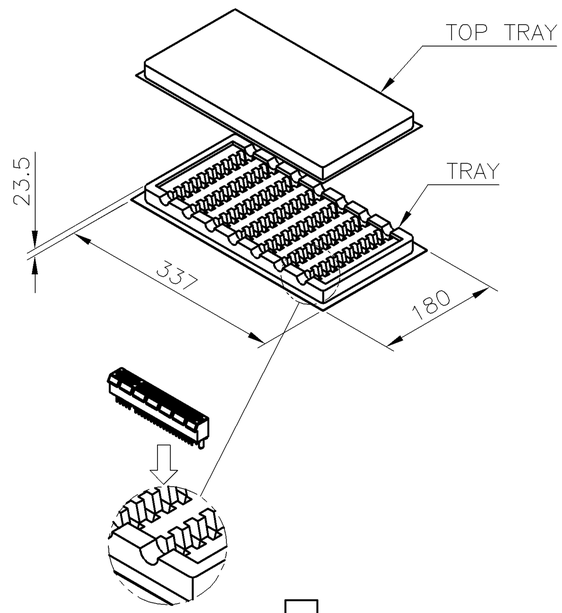

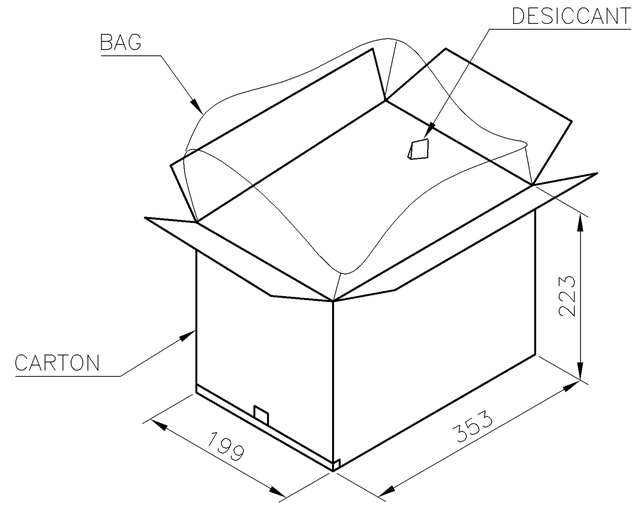

NOTES :
1. MATERIAL :
   TRAY : PVC, COLOR: TRANSPARENT.
   CARTON: CORRUGATED FIBER
   BOX: CORRUGATED FIBER
2. DIMENSION :
   TRAY: SEE DRAWING
   CARTON: SEE DRAWING
   BOX : SEE DRAWING
3. QUANTITY : SEE TABLE
4. WEIGHT : SEE TABLE

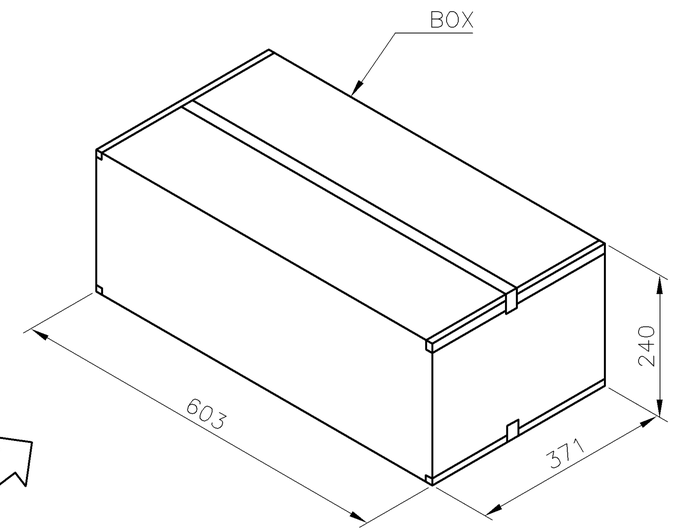

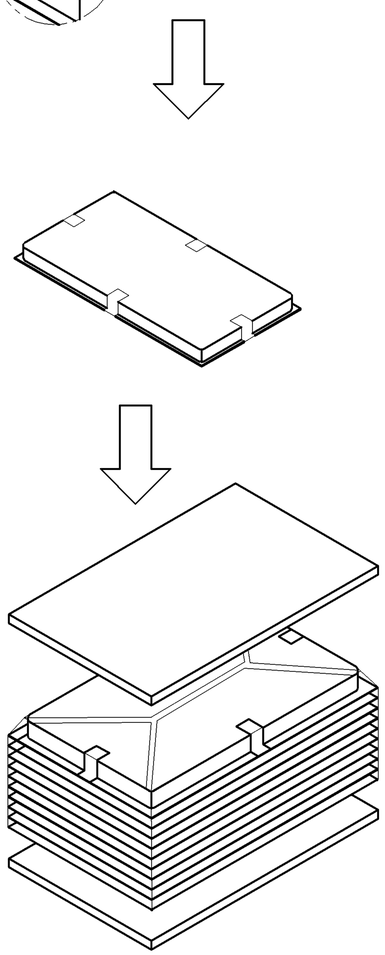

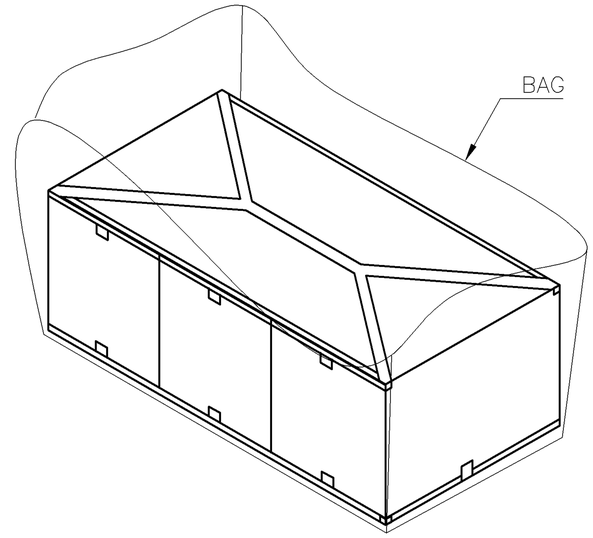

GROSS WEIGHT	NET WEIGHT	PCS/ TRAY	TRAY/ CARTON	CARTON/ BOX	PCS/ BOX	POS.
10.2 Kg	8.2 Kg	30	10	3	900	164
9.0 Kg	7.0 Kg	40	10	3	1200	98
8.5 Kg	6.5 Kg	60	10	3	1800	64
7.6 Kg	5.6 Kg	70	10	3	2100	36

THIS DRAWING IS A CONTROLLED DOCUMENT.

DIMENSIONS: MM

TOLERANCES UNLESS OTHERWISE SPECIFIED:
0 PLC ± –
1 PLC ± –
2 PLC ± –
3 PLC ± –
4 PLC ± –
ANGLES ± –

MATERIAL –
FINISH –

DWN –
CHK –
APVD –
PRODUCT SPEC –
APPLICATION SPEC –
WEIGHT –

TE Connectivity

NAME
PCI EXPRESS CARD EDGE CONNECTOR
VERTICAL, DIP TYPE, 3GIO

SIZE	CAGE CODE	DRAWING NO	RESTRICTED TO
A3	00779	C-1734774	—

CUSTOMER DRAWING | SCALE — | SHEET 4 OF 4 | REV F6

ООО «ЛайфЭлектроникс» “LifeElectronics” LLC

ИНН 7805602321 КПП 780501001 Р/С 40702810122510004610 ФАКБ "АБСОЛЮТ БАНК" (ЗАО) в г.Санкт-Петербурге К/С 30101810900000000703 БИК 044030703

Компания «Life Electronics» занимается поставками электронных компонентов импортного и отечественного производства от производителей и со складов крупных дистрибьюторов Европы, Америки и Азии.

С конца 2013 года компания активно расширяет линейку поставок компонентов по направлению коаксиальный кабель, кварцевые генераторы и конденсаторы (керамические, пленочные, электролитические), за счёт заключения дистрибьюторских договоров

Мы предлагаем:

- *Конкурентоспособные цены и скидки постоянным клиентам.*
- *Специальные условия для постоянных клиентов.*
- *Подбор аналогов.*
- *Поставку компонентов в любых объемах, удовлетворяющих вашим потребностям.*

- *Приемлемые сроки поставки, возможна ускоренная поставка.*
- *Доставку товара в любую точку России и стран СНГ.*
- *Комплексную поставку.*
- *Работу по проектам и поставку образцов.*
- *Формирование склада под заказчика.*

- *Сертификаты соответствия на поставляемую продукцию (по желанию клиента).*
- *Тестирование поставляемой продукции.*
- *Поставку компонентов, требующих военную и космическую приемку.*
- *Входной контроль качества.*
- *Наличие сертификата ISO.*

В составе нашей компании организован Конструкторский отдел, призванный помогать разработчикам, и инженерам.

Конструкторский отдел помогает осуществить:

- *Регистрацию проекта у производителя компонентов.*
- *Техническую поддержку проекта.*
- *Защиту от снятия компонента с производства.*
- *Оценку стоимости проекта по компонентам.*
- *Изготовление тестовой платы монтаж и пусконаладочные работы.*

Тел: +7 (812) 336 43 04 (многоканальный)
Email: org@lifeelectronics.ru

www.lifeelectronics.ru