BTA06 and BTB06 Series

SNUBBERLESS™, LOGIC LEVEL & STANDARD

6A TRIACs

Table 1: Main Features

Symbol	Value	Unit
$I_{T(RMS)}$	6	A
V_{DRM}/V_{RRM}	600 and 800	V
$I_{GT\ (Q_1)}$	5 to 50	mA

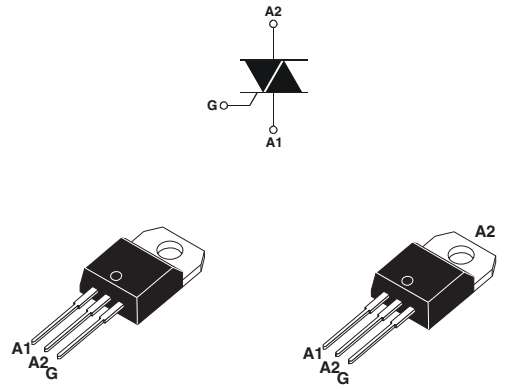

TO-220AB Insulated (BTA06) **TO-220AB (BTB06)**

DESCRIPTION

Available either in through-hole or surface-mount packages, the **BTA06** and **BTB06** triac series is suitable for general purpose AC switching. They can be used as an ON/OFF function in applications such as static relays, heating regulation, induction motor starting circuits... or for phase control operation in light dimmers, motor speed controllers,...

The snubberless and logic level versions (BTA/BTB...W) are specially recommended for use on inductive loads, thanks to their high commutation performances.
By using an internal ceramic pad, the BTA series provides voltage insulated tab (rated at $2500V_{RMS}$) complying with UL standards (File ref.: E81734).

Table 2: Order Codes

Part Number	Marking
BTA06-xxxxxRG	See page table 8 on page 6
BTB06-xxxxxRG	

Table 3: Absolute Maximum Ratings

Symbol	Parameter			Value	Unit
$I_{T(RMS)}$	RMS on-state current (full sine wave)	TO-220AB	T_c = 110°C	6	A
		TO-220AB Ins.	T_c = 105°C		
I_{TSM}	Non repetitive surge peak on-state current (full cycle, T_j initial = 25°C)	F = 50 Hz	t = 20 ms	60	A
		F = 60 Hz	t = 16.7 ms	63	
I^2t	I^2t Value for fusing	t_p = 10 ms		21	A^2s
dI/dt	Critical rate of rise of on-state current $I_G = 2 \times I_{GT}$, $t_r \leq 100$ ns	F = 120 Hz	T_j = 125°C	50	A/µs
I_{GM}	Peak gate current	t_p = 20 µs	T_j = 125°C	4	A
$P_{G(AV)}$	Average gate power dissipation		T_j = 125°C	1	W
T_{stg} T_j	Storage junction temperature range Operating junction temperature range			- 40 to + 150 - 40 to + 125	°C

Tables 4: Electrical Characteristics (T_j = 25°C, unless otherwise specified)

■ **SNUBBERLESS and Logic Level (3 quadrants)**

Symbol	Test Conditions	Quadrant		BTA06 / BTB06				Unit
				TW	SW	CW	BW	
I_{GT} (1)	V_D = 12 V R_L = 30 Ω	I - II - III	MAX.	5	10	35	50	mA
V_{GT}		I - II - III	MAX.	1.3				V
V_{GD}	$V_D = V_{DRM}$ R_L = 3.3 kΩ T_j = 125°C	I - II - III	MIN.	0.2				V
I_H (2)	I_T = 100 mA		MAX.	10	15	35	50	mA
I_L	$I_G = 1.2\ I_{GT}$	I - III	MAX.	10	25	50	70	mA
		II		15	30	60	80	
dV/dt (2)	V_D = 67 %V_{DRM} gate open T_j = 125°C		MIN.	20	40	400	1000	V/µs
(dI/dt)c (2)	(dV/dt)c = 0.1 V/µs T_j = 125°C		MIN.	2.7	3.5	-	-	A/ms
	(dV/dt)c = 10 V/µs T_j = 125°C			1.2	2.4	-	-	
	Without snubber T_j = 125°C			-	-	3.5	5.3	

■ **Standard (4 quadrants)**

Symbol	Test Conditions	Quadrant		BTA06 / BTB06		Unit
				C	B	
I_{GT} (1)	V_D = 12 V R_L = 30 Ω	I - II - III IV	MAX.	25 50	50 100	mA
V_{GT}		ALL	MAX.	1.3		V
V_{GD}	$V_D = V_{DRM}$ R_L = 3.3 kΩ T_j = 125°C	ALL	MIN.	0.2		V
I_H (2)	I_T = 500 mA		MAX.	25	50	mA
I_L	$I_G = 1.2\ I_{GT}$	I - III - IV	MAX.	40	50	mA
		II		80	100	
dV/dt (2)	V_D = 67 %V_{DRM} gate open T_j = 125°C		MIN.	200	400	V/µs
(dV/dt)c (2)	(dI/dt)c = 2.7 A/ms T_j = 125°C		MIN.	5	10	V/µs

Table 5: Static Characteristics

Symbol	Test Conditions			Value	Unit
V_{TM} (2)	I_{TM} = 8.5 A t_p = 380 µs	T_j = 25°C	MAX.	1.55	V
V_{t0} (2)	Threshold voltage	T_j = 125°C	MAX.	0.85	V
R_d (2)	Dynamic resistance	T_j = 125°C	MAX.	60	mΩ
I_{DRM} I_{RRM}	$V_{DRM} = V_{RRM}$	T_j = 25°C	MAX.	5	µA
		T_j = 125°C		1	mA

Note 1: minimum I_{GT} is guaranted at 5% of I_{GT} max.

Note 2: for both polarities of A2 referenced to A1.

Table 6: Thermal resistance

Symbol	Parameter		Value	Unit
$R_{th(j-c)}$	Junction to case (AC)	TO-220AB	1.8	°C/W
		TO-220AB Insulated	2.7	
$R_{th(j-a)}$	Junction to ambient	TO-220AB TO-220AB Insulated	60	°C/W

Figure 1: Maximum power dissipation versus RMS on-state current (full cycle)

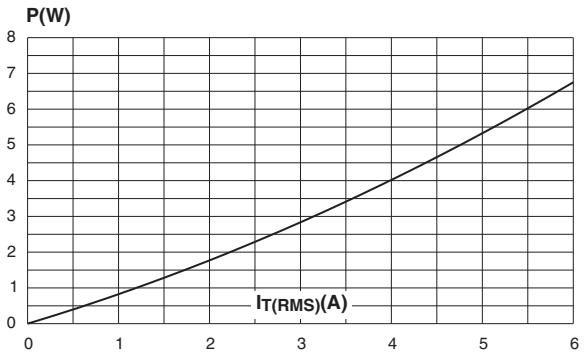

Figure 2: RMS on-state current versus case temperature (full cycle)

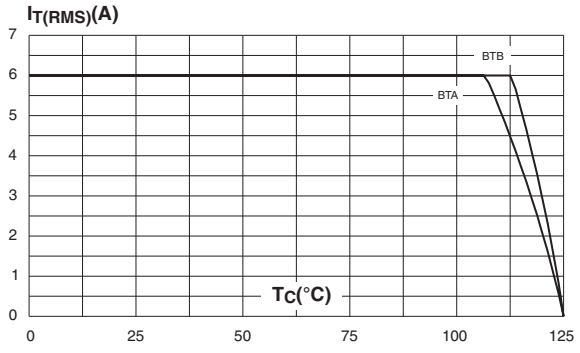

Figure 3: Relative variation of thermal impedance versus pulse duration

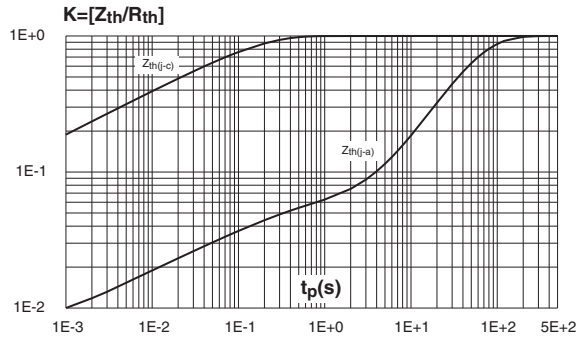

Figure 4: On-state characteristics (maximum values)

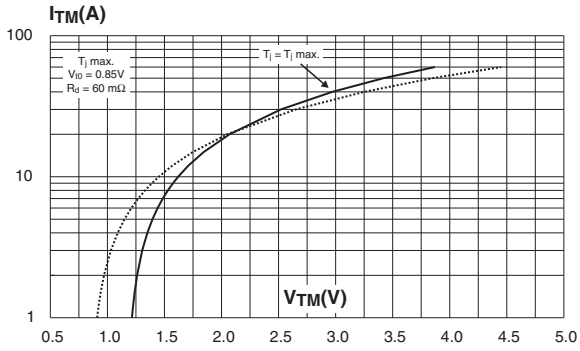

Figure 5: Surge peak on-state current versus number of cycles

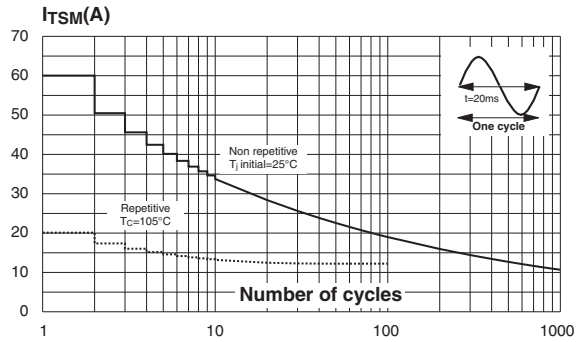

Figure 6: Non-repetitive surge peak on-state current for a sinusoidal pulse with width t_p < 10 ms and corresponding value of I^2t

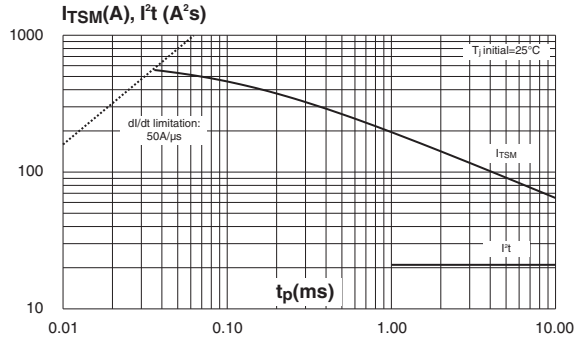

Figure 7: Relative variation of gate trigger current, holding current and latching current versus junction temperature (typical values)

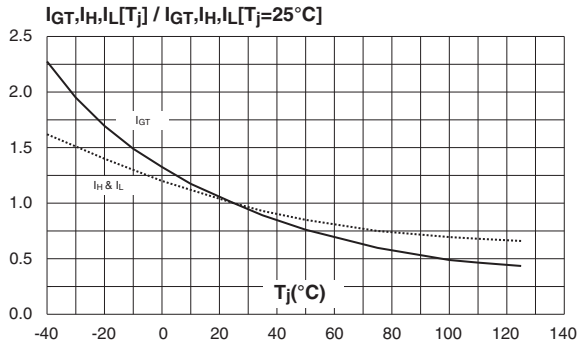

Figure 8: Relative variation of critical rate of decrease of main current versus (dV/dt)c (typical values) (Snubberless & logic level types)

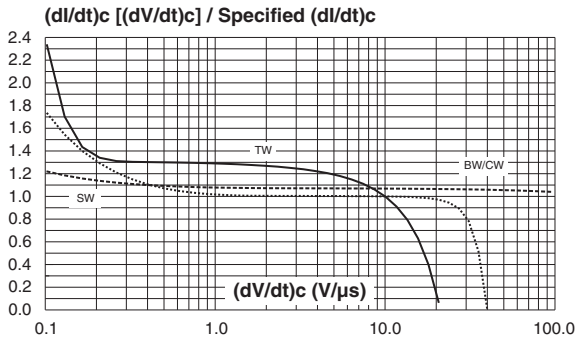

Figure 9: Relative variation of critical rate of decrease of main current versus (dV/dt)c (typical values) (Standard types)

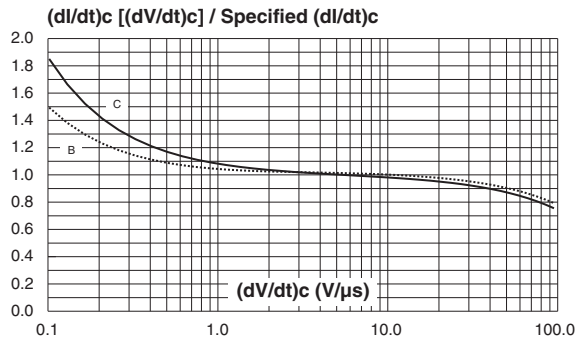

Figure 10: Relative variation of critical rate of decrease of main current versus junction temperature

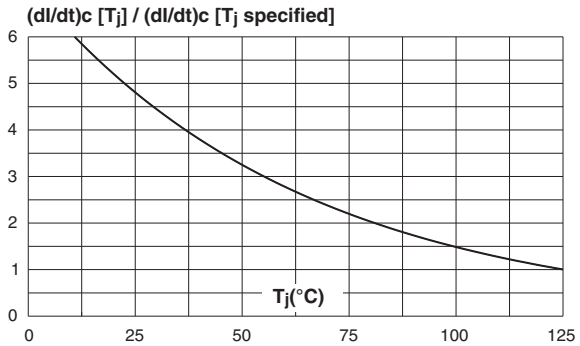

Figure 11: Ordering Information Scheme

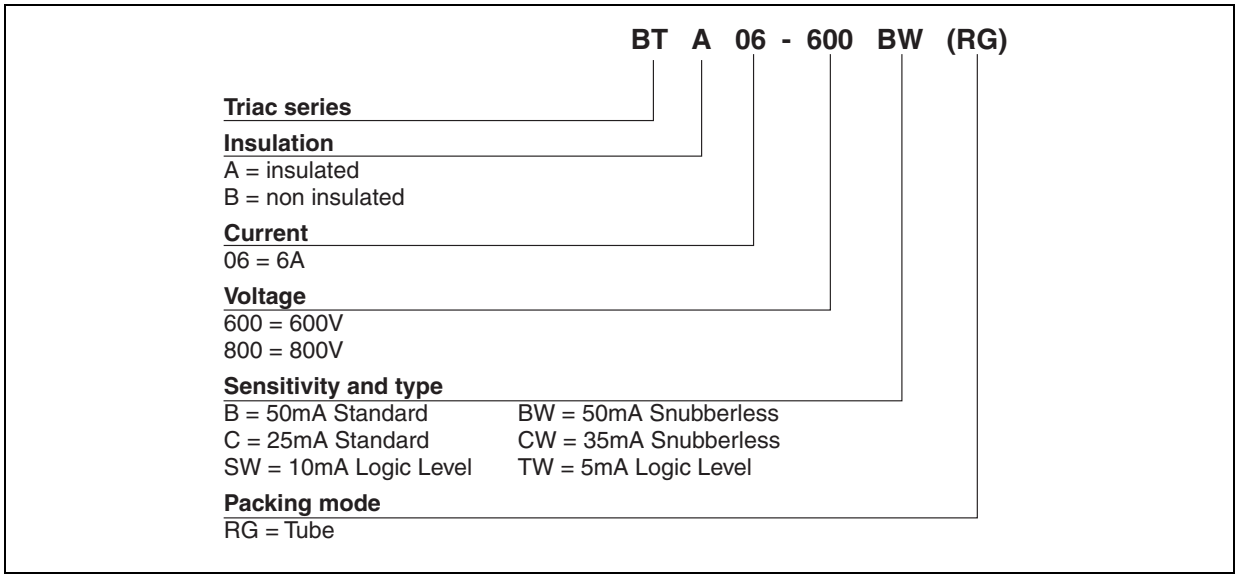

Table 7: Product Selector

Part Number	Voltage (xxx)		Sensitivity	Type	Package
	600 V	800 V			
BTA/BTB06-xxxB	X	X	50 mA	Standard	TO-220AB
BTA/BTB06-xxxBW	X	X	50 mA	Snubberless	TO-220AB
BTA/BTB06-xxxC	X	X	25 mA	Standard	TO-220AB
BTA/BTB06-xxxCW	X	X	35 mA	Snubberless	TO-220AB
BTA/BTB06-xxxSW	X	X	10 mA	Logic level	TO-220AB
BTA/BTB06-xxxTW	X	X	5 mA	Logic Level	TO-220AB

BTB: non insulated TO-220AB package

Figure 12: TO-220AB (insulated and non insulated) Package Mechanical Data

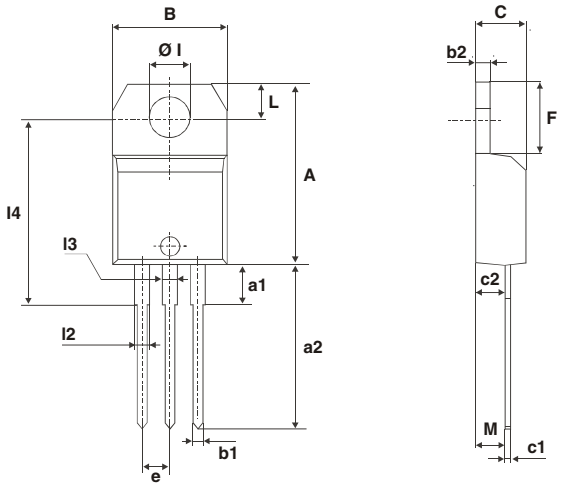

REF.	DIMENSIONS					
	Millimeters			Inches		
	Min.	Typ.	Max.	Min.	Typ.	Max.
A	15.20		15.90	0.598		0.625
a1		3.75			0.147	
a2	13.00		14.00	0.511		0.551
B	10.00		10.40	0.393		0.409
b1	0.61		0.88	0.024		0.034
b2	1.23		1.32	0.048		0.051
C	4.40		4.60	0.173		0.181
c1	0.49		0.70	0.019		0.027
c2	2.40		2.72	0.094		0.107
e	2.40		2.70	0.094		0.106
F	6.20		6.60	0.244		0.259
ØI	3.75		3.85	0.147		0.151
l4	15.80	16.40	16.80	0.622	0.646	0.661
L	2.65		2.95	0.104		0.116
l2	1.14		1.70	0.044		0.066
l3	1.14		1.70	0.044		0.066
M		2.60			0.102	

In order to meet environmental requirements, ST offers these devices in ECOPACK® packages. These packages have a Lead-free second level interconnect . The category of second level interconnect is marked on the package and on the inner box label, in compliance with JEDEC Standard JESD97. The maximum ratings related to soldering conditions are also marked on the inner box label. ECOPACK is an ST trademark. ECOPACK specifications are available at: www.st.com.

Table 8: Ordering Information

Ordering type	Marking	Package	Weight	Base qty	Delivery mode
BTA/BTB06-xxxyzRG	BTA/BTB06-xxxyz	TO-220AB	2.3 g	50	Tube

Note: xxx = voltage, yy = sensitivity, z = type

Table 9: Revision History

Date	Revision	Description of Changes
Apr-2002	5A	Last update.
13-Feb-2006	6	TO-220AB delivery mode changed from bulk to tube. ECOPACK statement added.

Information furnished is believed to be accurate and reliable. However, STMicroelectronics assumes no responsibility for the consequences of use of such information nor for any infringement of patents or other rights of third parties which may result from its use. No license is granted by implication or otherwise under any patent or patent rights of STMicroelectronics. Specifications mentioned in this publication are subject to change without notice. This publication supersedes and replaces all information previously supplied. STMicroelectronics products are not authorized for use as critical components in life support devices or systems without express written approval of STMicroelectronics.

The ST logo is a registered trademark of STMicroelectronics.
All other names are the property of their respective owners

© 2006 STMicroelectronics - All rights reserved

STMicroelectronics group of companies
Australia - Belgium - Brazil - Canada - China - Czech Republic - Finland - France - Germany - Hong Kong - India - Israel - Italy - Japan - Malaysia - Malta - Morocco - Singapore - Spain - Sweden - Switzerland - United Kingdom - United States of America
www.st.com

ООО «ЛайфЭлектроникс» “LifeElectronics” LLC

ИНН 7805602321 КПП 780501001 Р/С 40702810122510004610 ФАКБ "АБСОЛЮТ БАНК" (ЗАО) в г.Санкт-Петербурге К/С 30101810900000000703 БИК 044030703

Компания «Life Electronics» занимается поставками электронных компонентов импортного и отечественного производства от производителей и со складов крупных дистрибьюторов Европы, Америки и Азии.

С конца 2013 года компания активно расширяет линейку поставок компонентов по направлению коаксиальный кабель, кварцевые генераторы и конденсаторы (керамические, пленочные, электролитические), за счёт заключения дистрибьюторских договоров

Мы предлагаем:

- *Конкурентоспособные цены и скидки постоянным клиентам.*
- *Специальные условия для постоянных клиентов.*
- *Подбор аналогов.*
- *Поставку компонентов в любых объемах, удовлетворяющих вашим потребностям.*

- *Приемлемые сроки поставки, возможна ускоренная поставка.*
- *Доставку товара в любую точку России и стран СНГ.*
- *Комплексную поставку.*
- *Работу по проектам и поставку образцов.*
- *Формирование склада под заказчика.*

- *Сертификаты соответствия на поставляемую продукцию (по желанию клиента).*
- *Тестирование поставляемой продукции.*
- *Поставку компонентов, требующих военную и космическую приемку.*
- *Входной контроль качества.*
- *Наличие сертификата ISO.*

В составе нашей компании организован Конструкторский отдел, призванный помогать разработчикам, и инженерам.

Конструкторский отдел помогает осуществить:

- *Регистрацию проекта у производителя компонентов.*
- *Техническую поддержку проекта.*
- *Защиту от снятия компонента с производства.*
- *Оценку стоимости проекта по компонентам.*
- *Изготовление тестовой платы монтаж и пусконаладочные работы.*

Тел: +7 (812) 336 43 04 (многоканальный)
Email: org@lifeelectronics.ru

www.lifeelectronics.ru