LTC3850EUF
Dual Phase/Dual Output Synchronous Buck Converter

DESCRIPTION

Demonstration circuit 1185 is a dual phase/dual output synchronous buck converter featuring the LTC3850EUF. The demo board comes in two versions. The output voltages for version DC1185B-A are 2.0V/10A and 1.8V/10A. The output voltages for version DC1185B-B are 1.5V/15A and 1.2V/15A. The input voltage range is 6.5V to 14V for both versions. For applications that have a 5V ±0.5V input, the board has an optional resistor to tie the INTVCC pin to the VIN pin.

The demo board uses a high density, 2-sided drop-in layout. The power components excluding the bulk output and input capacitors, fit within a 1.35" × 0.75" area on the top layer. The control circuit resides in a 0.60" × 0.75" area on the bottom layer. The package style for the LTC3850EUF is a 4mm × 4mm 28-lead QFN with an exposed ground pad.

The main features of the board include an internal 5V linear regulator for bias, RUN pins for each output, an EXTVCC pin and a PGOOD signal. The board can be configured for either CCM (original setting), Burst Mode®, or pulse-skipping operation with the MODE jumper. The board also has optional resistors for single output/dual phase operation, rail tracking, DCR sensing and synchronization to an external clock.

Design files for this circuit board are available at http://www.linear.com/demo

LT, LTC, LTM, Linear Technology, the Linear logo and Burst Mode are registered trademarks of Linear Technology Corporation. All other trademarks are the property of their respective owners.

Note: Q1-Q4 MOSFETs changed on September 10, 2013. See Schematic Diagram.

PERFORMANCE SUMMARY

Specifications are at T_A = 25°C

PARAMETER	CONDITION	VALUE
Minimum Input Voltage		6.5V
Maximum Input Voltage		14V
Version DC1185B-A		
Output Voltage V_{OUT1}	I_{OUT1} = 0A to 10A	2.0V ±2%
Output Voltage V_{OUT2}	I_{OUT2} = 0A to 10A	1.8V ±2%
Nominal Switching Frequency		500kHz
Full-Load Efficiency (See Figure 3 for Efficiency Curves)	V_{OUT1} = 2.0V, I_{OUT1} = 10A, V_{IN} = 12V V_{OUT2} = 1.8V, I_{OUT2} = 10A, V_{IN} = 12V	90.2% 89.5%
Version DC1185B-B		
Output Voltage V_{OUT1}	I_{OUT1} = 0A to 15A	1.5V ±2%
Output Voltage V_{OUT2}	I_{OUT2} = 0A to 15A	1.2V ±2%
Nominal Switching Frequency		400kHz
Full-Load Efficiency (See Figure 4 for Efficiency Curves)	V_{OUT1} = 1.5V, I_{OUT1} = 15A, V_{IN} = 12V V_{OUT2} = 1.2V, I_{OUT2} = 15A, V_{IN} = 12V	88.1% 86.5%

QUICK START PROCEDURE

Demonstration circuit 1185 is easy to set up to evaluate the performance of the LTC3850EUF. Refer to Figure 1 for the proper measurement equipment setup and follow the procedure below:

Note: When measuring the output or input voltage ripple, care must be taken to avoid a long ground lead on the oscilloscope probe. See Figure 2 for the proper scope probe technique. Short, stiff leads need to be soldered to the (+) and (–) terminals of an output capacitor. The probe's ground ring needs to touch the (–) lead and the probe tip needs to touch the (+) lead.

Place jumpers in the following positions:

JP1	**RUN1**	**ON**
JP2	**RUN2**	**ON**
JP3	**MODE**	**CCM**

With power off, connect the input power supply to VIN and GND.

Turn on the power at the input.

Note: Make sure that the input voltage does not exceed 15V.

Check for the proper output voltages.

Version DC1158B-A:

V_{OUT1} = 1.960V to 2.040V

V_{OUT2} = 1.764V to 1.836V

Version DC1158B-B:

V_{OUT1} = 1.470V to 1.530V

V_{OUT2} = 1.176V to 1.224V

Once the proper output voltages are established, adjust the loads within the operating range and observe the output voltage regulation, ripple voltage, efficiency and other parameters.

Note: Do not apply load across the VOS*n*+ and VOS*n*– turrets. These turrets are only intended to Kelvin sense the output voltage across COUT1 and COUT4. Heavy load currents may damage the output voltage sense traces.

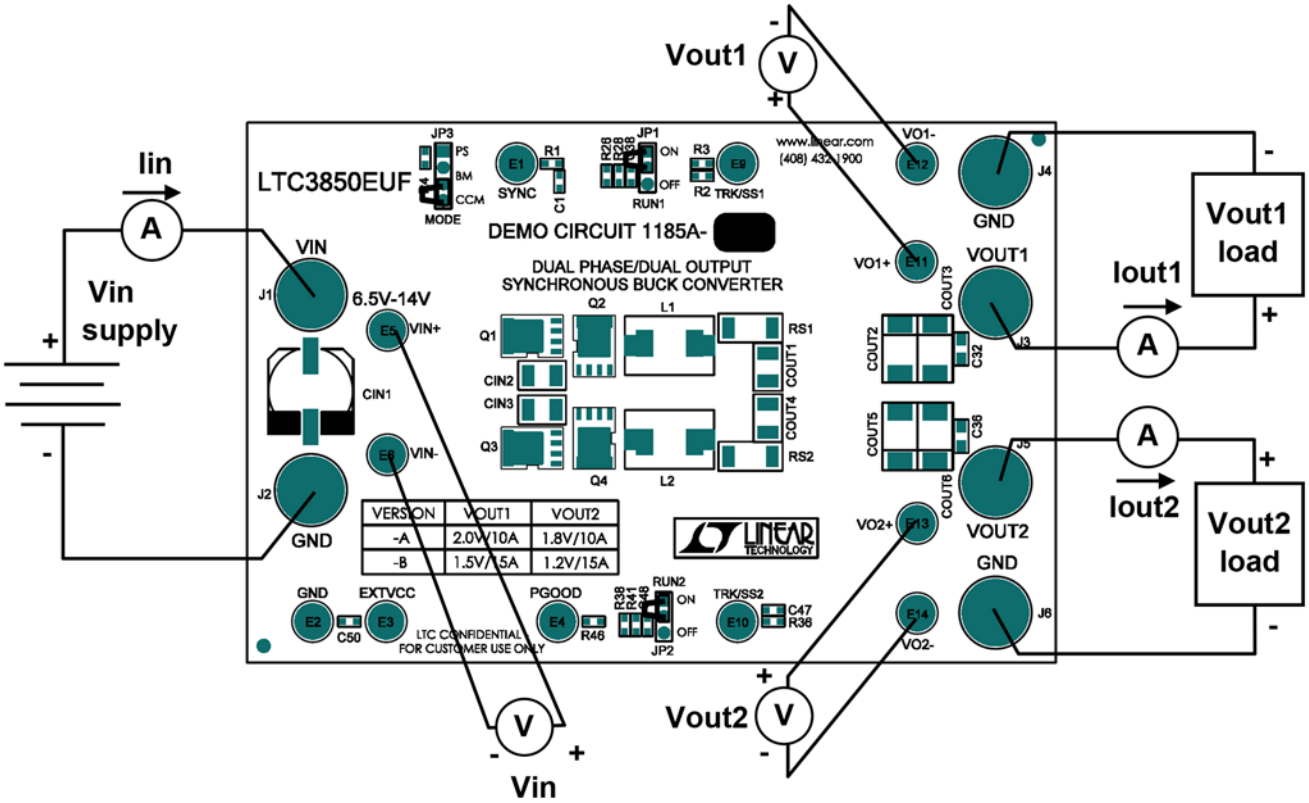

Figure 1. Proper Measurement Equipment Setup

QUICK START PROCEDURE

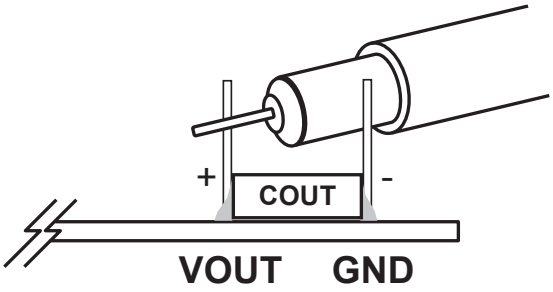

Figure 2. Measuring Output Voltage Ripple

2.0V/10A and 1.8V/10A Efficiency at V_{IN} = 12V and f_{SW} = 500kHz

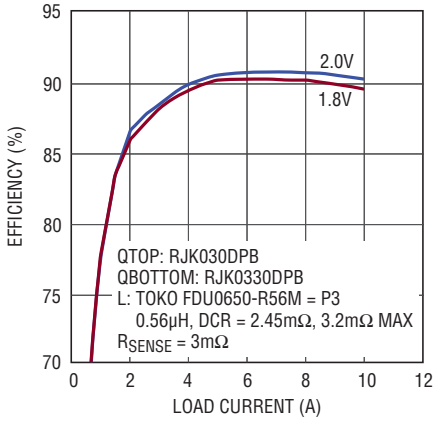

Figure 3. Efficiency Curves for the DC1185B-A

1.5V/15A and 1.2V/15A Efficiency at V_{IN} = 12V and f_{SW} = 400kHz

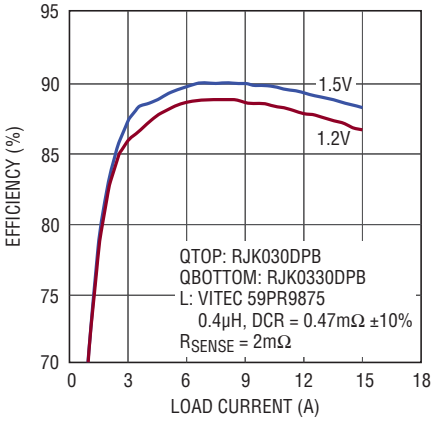

Figure 4. Efficiency Curves for the DC1185B-B

SINGLE OUTPUT/DUAL PHASE OPERATION

A single output/dual phase converter may be preferred for high output current applications. The benefits of single output/dual phase operation is lower ripple current through the input and output capacitors, improved load step response and simplified thermal design. To implement single output/dual phase operation, make the following modifications:

1. Tie VOUT1 to VOUT2 by tying together the exposed copper pads near J3 and J5 at the edge of the board. Use a piece of heavy copper foil.
2. Tie ITH1 to ITH2 by stuffing 0Ω at R49.
3. Tie VFB1 to VFB2 by stuffing 0Ω at R50.
4. Tie TRK/SS1 to TRK/SS2 by stuffing 0Ω at R52.
5. Tie RUN1 to RUN2 by stuffing 0Ω at R55.
6. Remove the redundant ITH compensation network and VFB divider.

RAIL TRACKING

Demonstration circuit 1185 is set up for independent turn-on of VOUT1 and VOUT2. The ramp-rate for VOUT1 is determined by the TRK/SS1 capacitor at C2 and the ramp-rate for VOUT2 is determined by the TRK/SS2 capacitor at C47. The turn-on of one rail will not affect the other for the original demo board.

This board can be modified on the bench to allow VOUT1 to track an external signal. It can also be modified to allow VOUT2 to track VOUT1 or to allow VOUT2 to track an external signal. Tables 2 and 3 cover the rail tracking options for each rail, with the DC3850B-B version used as an example.

Table 1. VOUT1 Tracking Options for a 1.5V Output

	TRACK 1 DIVIDER		TRK/SS1 CAPACITOR
CONFIGURATION	**R3**	**R2**	**C2**
Soft-Start without Tracking (Original Board)	0Ω	Not Stuffed	0.1µF
External Coincident Tracking	17.8kΩ	20.0kΩ	Not Stuffed

Table 2. VOUT2 Tracking Options for a 1.2V Output

	TRACK 2 DIVIDER			TRK/SS2 CAPACITOR
CONFIGURATION	**R36**	**R34**	**R37**	**C47**
Soft-Start without Tracking (Original Board)	0Ω	Not Stuffed	Not Stuffed	0.1µF
Coincident Tracking to VOUT1 (1.5V)	0Ω	10.0kΩ	20.0kΩ	Not Stuffed
External Coincident Tracking	10.0kΩ	Not Stuffed	20.0kΩ	Not Stuffed

INDUCTOR DCR SENSING

Demonstration circuit 1185 provides an optional circuit for DCR sensing. DCR sensing uses the DCR of the inductor to sense the inductor current instead of discrete sense resistors. The advantages of DCR sensing are lower cost, reduced board space and higher efficiency, but the disadvantage is a less accurate current limit. If DCR sensing is used, be sure to select an inductor current with a sufficiently high saturation current or use an iron powder type. Tables 3 and 4 show an example of how to modify the DC1185 for DCR sensing using these parameters:

V_{OUT1} = 2.0V/10A

V_{OUT2} = 1.8V/10A

V_{IN} = 6.5V to 14V

f_{SW} = 500kHz, typical

L1, L2 = Toko FDU0650-R56M=P3
(0.56µH, DCR = 2.45mΩ Typ, 3.2mΩ Max)

ILIM = Floating (R42, R44 = Open)

Table 3. V_{OUT1} Configured as a 2.0V/10A Converter Using DCR Sensing and Discrete Sense Resistors

			R_{SENSE} FILTER RESISTORS	SENSE FIILTER CAPACITOR	DCR FILTER/DIVIDER RESISTORS		SENSE1– TO L1– JUMPER
					TOP	BOTTOM	
CONFIGURATION	**RS1**	**L1**	**R29, R30**	**C14**	**R45**	**R47**	**R61**
DCR Sensing	Short with Cu Strip or Very Short and Thick Piece of Wire	Toko FDU0650-R56M=P3	Open	0.1µF	2.37kΩ	6.49kΩ	0Ω
Discrete R_{SENSE} (Original Board)	3mΩ 2010 Package	Toko FDU0650-R56M=P3	100Ω	1nF	Open	Open	Open

Table 4. V_{OUT2} Configured as a 1.8V/10A Converter Using DCR Sensing and Discrete Sense Resistors

			R_{SENSE} FILTER RESISTORS	SENSE FIILTER CAPACITOR	DCR FILTER/DIVIDER RESISTORS		SENSE1– TO L1– JUMPER
					TOP	BOTTOM	
CONFIGURATION	**RS2**	**L2**	**R39, R40**	**C15**	**R51**	**R53**	**R62**
DCR Sensing	Short with Cu Strip or Very Short and Thick Piece of Wire	Toko FDU0650-R56M=P3	Open	0.1µF	2.37kΩ	6.49kΩ	0Ω
Discrete R_{SENSE} (Original Board)	3mΩ 2010 Package	Toko FDU0650-R56M=P3	100Ω	1nF	Open	Open	Open

SYNCHRONIZATION TO AN EXTERNAL CLOCK

The LTC3850 uses a phase-lock-loop which forces its internal clock to be synchronized to an external clock. Once synchronized, the rising edge of the top FET gate is aligned to the rising edge of the external clock. The external clock signal needs to be applied to the LTC3850's MODE pin which is tied to the turret labeled SYNC. The internal phase lock loop is stabilized by a network on the FREQ pin of the LTC3850. To set up the DC1185 for synchronization to an external clock, follow the steps below.

1. Remove R7.
2. Stuff 10kΩ at R8.
3. Stuff 10nF at R10.
4. Leave 1nF at C12.
5. Float the MODE pin by placing the MODE jumper in the BM position.
6. Apply the external clock from the turret la-beled SYNC to GND.

PARTS LIST (DC1185B-A)

ITEM	QTY	REFERENCE	PART DESCRIPTION	MANUFACTURER/PART NUMBER
Required Circuit Components				
1	3	C11, C32, C36	CAP, 0805 4.7µF 10% 6.3V X5R	AVX 08056D475KAT
2	5	C12, C14, C15, C41, C44	CAP, 0603 1nF 10% 50V X7R	AVX 06035C102KAT
3	5	C2, C17, C20, C21, C47	CAP, 0603 0.1µF 10% 25V X7R	TDK C1608X7R1E104K
4	2	C43, C42	CAP, 0603 100pF 5% 25V X7R	AVX 06033C101JAT
5	1	CIN1	CAP, 180µF 20% 16V OSCON	SANYO OSCON 16SVP180MX
6	2	CIN2, CIN3	CAP, 1210 10µF 10% 16V X5R	TAIYO YUDEN EMK325BJ106KN-T
7	2	COUT1, COUT4	CAP, 1210 47µF 20% 6.3V X5R	TDK C3225X5R0J476MT
8	4	COUT2, COUT3, COUT5, COUT6	CAP, 7343 330µF 20% 2.5V POSCAP	SANYO 2R5TPE330M9
9	2	D2, D1	DIODE, CMDSH-3 SOD323	CENTRAL CMDSH-3TR
10	2	L1, L2	IND, 0.56µH	TOKO FDU0650-R56M=P3
11	2	Q1, Q3	XSTR, N-CHANNEL MOSFET	RENESAS RJK0305DPB
12	2	Q2, Q4	XSTR, N-CHANNEL MOSFET	RENESAS RJK0330DPB
13	1	R10	RES, 0603 3.16k 1% 1/10W	VISHAY CRCW06033K16FKEA
14	1	R18	RES, 0603 2.2Ω 5% 1/10W	VISHAY CRCW06032R20JNEA
15	1	R27	RES, 0603 30.1k 1% 1/10W	VISHAY CRCW060330K1FKEA
16	4	R29, R30, R39, R40	RES, 0603 100Ω 5% 1/10W	VISHAY CRCW0603100RJNEA
17	2	R31,R35	RES, 0603 8.66k 1% 1/10W	VISHAY CRCW06038K66FKEA
18	2	R32,R33	RES, 0603 20k 1% 1/10W	VISHAY CRCW060320KFKEA
19	1	R43	RES, 0603 25.5k 1% 1/10W	VISHAY CRCW060325K5FKEA
20	1	R46	RES, 0603 100k 5% 1/10W	VISHAY CRCW0603100KJNEB
21	2	R7, R4	RES, 0603 10k 1% 1/16W	VISHAY CRCW060310K0FKEB
22	3	R8, R9, R25	RES, 0603 0Ω JUMPER	PANASONIC ERJ3GEY0R00V
23	2	RS2, RS1	RES, 2010 0.003Ω 5% 1/2W	VISHAY WSL20103L000FEA
24	1	U1	IC, LTC3850EUF	LINEAR TECH. LTC3850EUF
Additional Circuit Components				
1	0	CIN5, CIN4	CAP, 1210 OPTION	OPTION
2	0	C1, C37, C38, C47, C48, C49	CAP, 0603 OPTION	OPTION
3	1	C50	CAP, 0603 1µF 20% 16V X7R	AVX 0603YC105MAT2A
4	0	D4, D3	DIODE, SCHOTTKY 40V 3A OPTION	OPTION
5	0	Q5, Q6, Q7, Q8	DO NOT STUFF	OPTION
6	3	R1, R3, R36	RES, 0603 0Ω JUMPER	PANASONIC ERJ3GEY0R00V
7	0	R2, R26, R28, R34, R37, R38, R41, R42, R44, R45, R47, R49, R50-R53, R55, R60-R62	RES, 0603 OPTION	OPTION
Hardware				
1	12	E1-E6, E9-E14	TURRET	MILL-MAX 2501-2-00-80-00-00-07-0
2	2	JP2, JP1	HEADER, 3-PIN, 2mm	SAMTEC TMM-103-02-L-S
3	1	JP3	HEADER, 4-PIN	SAMTEC TMM-104-02-L-S
4	6	J1, J2, J3, J4, J5, J6	JACK, BANANA	KEYSTONE 575-4
5	3	JP1-JP3	SHUNT, 2mm	SAMTEC 2SN-BK-G

PARTS LIST (DC1185B-B)

ITEM	QTY	REFERENCE	PART DESCRIPTION	MANUFACTURER/PART NUMBER
Required Circuit Components				
1	3	C11, C32, C36	CAP, 0805 4.7µF 10% 6.3V X5R	AVX 08056D475KAT
2	5	C12, C14, C15, C41, C44	CAP, 0603 1nF 10% 50V X7R	AVX 06035C102KAT
3	5	C2, C17, C20, C21, C47	CAP, 0603 0.1µF 10% 25V X7R	TDK C1608X7R1E104K
4	2	C43, C42	CAP, 0603 100pF 5% 25V X7R	AVX 06033C101JAT
5	1	CIN1	CAP, 180µF 20% 16V OSCON	SANYO OSCON 16SVP180MX
6	2	CIN2, CIN3	CAP, 1210 10µF 10% 16V X5R	TAIYO YUDEN EMK325BJ106KN-T
7	2	COUT1, COUT4	CAP, 1210 100µF 20% 6.3V X5R	TDK C3225X5R0J107MT
8	4	COUT2, COUT3, COUT5, COUT6	CAP, 7343 330µF 20% 2.5V POSCAP	SANYO 2R5TPE330M9
9	2	D2, D1	DIODE, CMDSH-3 SOD323	CENTRAL CMDSH-3TR
10	2	L1, L2	IND, 0.4µH	VITEC 59PR9875
11	2	Q1, Q3	XSTR, N-CHANNEL MOSFET	RENESAS RJK0305DPB
12	2	Q2, Q4	XSTR, N-CHANNEL MOSFET	RENESAS RJK0330DPB
13	1	R10	RES, 0603 2.55k 1% 1/10W	VISHAY CRCW06032K55FKEB
14	1	R18	RES, 0603 2.2Ω 5% 1/10W	VISHAY CRCW06032R20JNEA
15	1	R27	RES, 0603 17.8k 1% 1/10W	VISHAY CRCW060317K8FKEA
16	4	R29, R30, R39, R40	RES, 0603 100Ω 5% 1/10W	VISHAY CRCW0603100RJNEA
17	2	R31, R35	RES, 0603 5.9k 1% 1/10W	VISHAY CRCW06035K90FKEA
18	2	R32, R33	RES, 0603 20k 1% 1/10W	VISHAY CRCW060320KFKEA
19	1	R43	RES, 0603 10.0k 1% 1/10W	VISHAY CRCW060310K0FKEB
20	1	R46	RES, 0603 100k 5% 1/10W	VISHAY CRCW0603100KJNEB
21	2	R7, R4	RES, 0603 10k 1% 1/16W	VISHAY CRCW060310K0FKEB
22	3	R8, R9, R25	RES, 0603 0Ω JUMPER	PANASONIC ERJ3GEY0R00V
23	2	RS2, RS1	RES, 2010 0.002Ω 5% 1/2W	VISHAY WSL20102L000FEA
24	1	U1	IC, LTC3850EUF	LINEAR TECH. LTC3850EUF
Additional Circuit Components				
1	0	CIN5, CIN4	CAP, 1210 OPTION	OPTION
2	0	C1, C37, C38, C47, C48, C49	CAP, 0603 OPTION	OPTION
3	1	C50	CAP, 0603 1µF 20% 16V X7R	AVX 0603YC105MAT2A
4	0	D4, D3	DIODE, SCHOTTKY 40V 3A OPTION	OPTION
5	0	Q5, Q6, Q7, Q8	DO NOT STUFF	OPTION
6	3	R1, R3, R36	RES, 0603 0Ω JUMPER	PANASONIC ERJ3GEY0R00V
7	0	R2, R26, R28, R34, R37, R38, R41, R42, R44, R45, R47, R49, R50-R53, R55, R60-R62	RES, 0603 OPTION	OPTION
Hardware				
1	12	E1-E6, E9-E14	TURRET	MILL-MAX 2501-2-00-80-00-00-07-0
2	2	JP2, JP1	HEADER, 3-PIN, 2mm	SAMTEC TMM-103-02-L-S
3	1	JP3	HEADER, 4-PIN	SAMTEC TMM-104-02-L-S
4	6	J1, J2, J3, J4, J5, J6	JACK, BANANA	KEYSTONE 575-4
5	3	JP1-JP3	SHUNT, 2mm	SAMTEC 2SN-BK-G

SCHEMATIC DIAGRAM

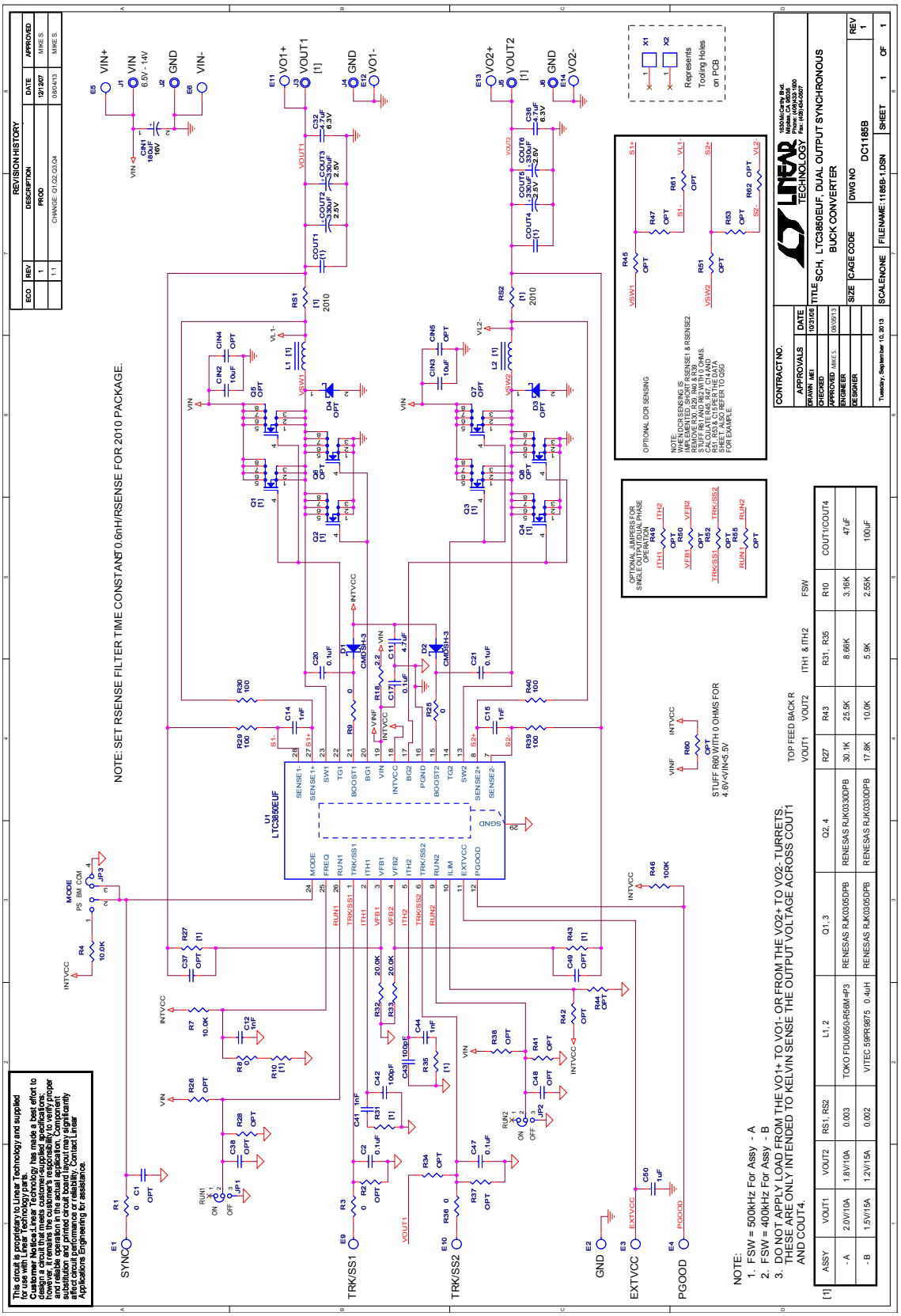

Information furnished by Linear Technology Corporation is believed to be accurate and reliable. However, no responsibility is assumed for its use. Linear Technology Corporation makes no representation that the interconnection of its circuits as described herein will not infringe on existing patent rights.

DEMONSTRATION BOARD IMPORTANT NOTICE

Linear Technology Corporation (LTC) provides the enclosed product(s) under the following **AS IS** conditions:

This demonstration board (DEMO BOARD) kit being sold or provided by Linear Technology is intended for use for **ENGINEERING DEVELOPMENT OR EVALUATION PURPOSES ONLY** and is not provided by LTC for commercial use. As such, the DEMO BOARD herein may not be complete in terms of required design-, marketing-, and/or manufacturing-related protective considerations, including but not limited to product safety measures typically found in finished commercial goods. As a prototype, this product does not fall within the scope of the European Union directive on electromagnetic compatibility and therefore may or may not meet the technical requirements of the directive, or other regulations.

If this evaluation kit does not meet the specifications recited in the DEMO BOARD manual the kit may be returned within 30 days from the date of delivery for a full refund. THE FOREGOING WARRANTY IS THE EXCLUSIVE WARRANTY MADE BY THE SELLER TO BUYER AND IS IN LIEU OF ALL OTHER WARRANTIES, EXPRESSED, IMPLIED, OR STATUTORY, INCLUDING ANY WARRANTY OF MERCHANTABILITY OR FITNESS FOR ANY PARTICULAR PURPOSE. EXCEPT TO THE EXTENT OF THIS INDEMNITY, NEITHER PARTY SHALL BE LIABLE TO THE OTHER FOR ANY INDIRECT, SPECIAL, INCIDENTAL, OR CONSEQUENTIAL DAMAGES.

The user assumes all responsibility and liability for proper and safe handling of the goods. Further, the user releases LTC from all claims arising from the handling or use of the goods. Due to the open construction of the product, it is the user's responsibility to take any and all appropriate precautions with regard to electrostatic discharge. Also be aware that the products herein may not be regulatory compliant or agency certified (FCC, UL, CE, etc.).

No License is granted under any patent right or other intellectual property whatsoever. **LTC assumes no liability for applications assistance, customer product design, software performance, or infringement of patents or any other intellectual property rights of any kind.**

LTC currently services a variety of customers for products around the world, and therefore this transaction **is not exclusive**.

Please read the DEMO BOARD manual prior to handling the product. Persons handling this product must have electronics training and observe good laboratory practice standards. **Common sense is encouraged**.

This notice contains important safety information about temperatures and voltages. For further safety concerns, please contact a LTC application engineer.

Mailing Address:

Linear Technology
1630 McCarthy Blvd.
Milpitas, CA 95035

Copyright © 2004, Linear Technology Corporation

ООО «ЛайфЭлектроникс» “LifeElectronics” LLC

ИНН 7805602321 КПП 780501001 Р/С 40702810122510004610 ФАКБ "АБСОЛЮТ БАНК" (ЗАО) в г.Санкт-Петербурге К/С 30101810900000000703 БИК 044030703

Компания «Life Electronics» занимается поставками электронных компонентов импортного и отечественного производства от производителей и со складов крупных дистрибьюторов Европы, Америки и Азии.

С конца 2013 года компания активно расширяет линейку поставок компонентов по направлению коаксиальный кабель, кварцевые генераторы и конденсаторы (керамические, пленочные, электролитические), за счёт заключения дистрибьюторских договоров

Мы предлагаем:

- *Конкурентоспособные цены и скидки постоянным клиентам.*
- *Специальные условия для постоянных клиентов.*
- *Подбор аналогов.*
- *Поставку компонентов в любых объемах, удовлетворяющих вашим потребностям.*

- *Приемлемые сроки поставки, возможна ускоренная поставка.*
- *Доставку товара в любую точку России и стран СНГ.*
- *Комплексную поставку.*
- *Работу по проектам и поставку образцов.*
- *Формирование склада под заказчика.*

- *Сертификаты соответствия на поставляемую продукцию (по желанию клиента).*
- *Тестирование поставляемой продукции.*
- *Поставку компонентов, требующих военную и космическую приемку.*
- *Входной контроль качества.*
- *Наличие сертификата ISO.*

В составе нашей компании организован Конструкторский отдел, призванный помогать разработчикам, и инженерам.

Конструкторский отдел помогает осуществить:

- *Регистрацию проекта у производителя компонентов.*
- *Техническую поддержку проекта.*
- *Защиту от снятия компонента с производства.*
- *Оценку стоимости проекта по компонентам.*
- *Изготовление тестовой платы монтаж и пусконаладочные работы.*

Тел: +7 (812) 336 43 04 (многоканальный)
Email: org@lifeelectronics.ru

www.lifeelectronics.ru