TDK

March 2015

Inductors for Power Circuits

Wound Metallic Magnetic Material

SPM Series

SPM4015 Type

SPM4015

REMINDERS FOR USING THESE PRODUCTS

Before using these products, be sure to request the delivery specifications.

SAFETY REMINDERS

Please pay sufficient attention to the warnings for safe designing when using these products.

⚠ REMINDERS

- The storage period is less than 12 months. Be sure to follow the storage conditions (Temperature: 5 to 40°C, Humidity: 10 to 75% RH or less).
  If the storage period elapses, the soldering of the terminal electrodes may deteriorate.
- Do not use or store in locations where there are conditions such as gas corrosion (salt, acid, alkali, etc.).
- Before soldering, be sure to preheat components.
  The preheating temperature should be set so that the temperature difference between the solder temperature and chip temperature does not exceed 150°C.
- Soldering corrections after mounting should be within the range of the conditions determined in the specifications.
  If overheated, a short circuit, performance deterioration, or lifespan shortening may occur.
- When embedding a printed circuit board where a chip is mounted to a set, be sure that residual stress is not given to the chip due to the overall distortion of the printed circuit board and partial distortion such as at screw tightening portions.
- Self heating (temperature increase) occurs when the power is turned ON, so the tolerance should be sufficient for the set thermal design.
- Carefully lay out the coil for the circuit board design of the non-magnetic shield type.
  A malfunction may occur due to magnetic interference.
- Use a wrist band to discharge static electricity in your body through the grounding wire.
- Do not expose the products to magnets or magnetic fields.
- Do not use for a purpose outside of the contents regulated in the delivery specifications.
- The products listed on this catalog are intended for use in general electronic equipment (AV equipment, telecommunications equipment, home appliances, amusement equipment, computer equipment, personal equipment, office equipment, measurement equipment, industrial robots) under a normal operation and use condition.
  The products are not designed or warranted to meet the requirements of the applications listed below, whose performance and/or quality require a more stringent level of safety or reliability, or whose failure, malfunction or trouble could cause serious damage to society, person or property.
  If you intend to use the products in the applications listed below or if you have special requirements exceeding the range or conditions set forth in the each catalog, please contact us.

(1) Aerospace/Aviation equipment
(2) Transportation equipment (cars, electric trains, ships, etc.)
(3) Medical equipment
(4) Power-generation control equipment
(5) Atomic energy-related equipment
(6) Seabed equipment
(7) Transportation control equipment
(8) Public information-processing equipment
(9) Military equipment
(10) Electric heating apparatus, burning equipment
(11) Disaster prevention/crime prevention equipment
(12) Safety equipment
(13) Other applications that are not considered general-purpose applications

When designing your equipment even for general-purpose applications, you are kindly requested to take into consideration securing protection circuit/device or providing backup circuits in your equipment.

Inductors for Power Circuits

Wound Metallic Magnetic Material

Product compatible with RoHS directive
Halogen-free
Compatible with lead-free solders

Overview of SPM4015 Type

FEATURES

- Magnetic shield type wound inductor for power circuits using a metallic magnetic material.
- Low-profile product.
- Compared to ferrite wound type inductors, it is possible to achieve large current, low Rdc, and compactness.
- Low inductance variance in high-temperature environments with good DC superimposition characteristics.
- Metallic magnetic material is used, and the structure has an integrated molded coil, so hum noise is lower than with core adhesive coils.

APPLICATION

Smart phones, tablet terminals, laptop computers, HDDs, servers, VRMs, compact power supply modules, other

PART NUMBER CONSTRUCTION

SPM	4015	T	-	R47	M
Series name	L×W×H Dimensions (mm max.)	Packaging style		Inductance (μH)	Inductance tolerance

L×W×H Dimensions (mm max.)	
4015	4.4×4.1×1.5

Packaging style	
T	Taping

Inductance (μH)	
R47	0.47
1R5	1.5
2R2	2.2

Inductance tolerance	
M	±20%

OPERATING TEMPERATURE RANGE, PACKAGE QUANTITY, PRODUCT WEIGHT

Type	Temperature range		Package quantity	Individual weight
	Operating temperature* (°C)	Storage temperature** (°C)	(pieces/reel)	(g)
SPM4015	–40 to +125	–40 to +125	1000	0.1224

* Operating temperature range includes self-temperature rise.
** The Storage temperature range is for after the circuit board is mounted.

- RoHS Directive Compliant Product: See the following for more details related to RoHS Directive compliant products. http://product.tdk.com/en/environment/rohs/
- Halogen-free: Indicates that Cl content is less than 900ppm, Br content is less than 900ppm, and that the total Cl and Br content is less than 1500ppm.

⚠ Please be sure to request delivery specifications that provide further details on the features and specifications of the products for proper and safe use.
Please note that the contents may change without any prior notice due to reasons such as upgrading.

SPM4015 Type

RECOMMENDED REFLOW PROFILE

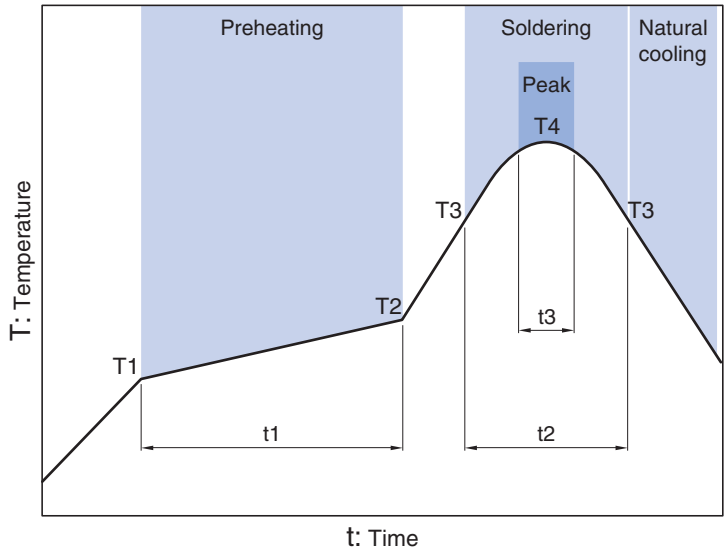

Preheating			Soldering		Peak	
Temp.		Time	Temp.	Time	Temp.	Time
T1	T2	t1	T3	t2	T4	t3
150°C	180°C	120s	230°C	30s	260°C	10s max.

⚠ Please be sure to request delivery specifications that provide further details on the features and specifications of the products for proper and safe use.
Please note that the contents may change without any prior notice due to reasons such as upgrading.

SPM4015 Type

SHAPE & DIMENSIONS

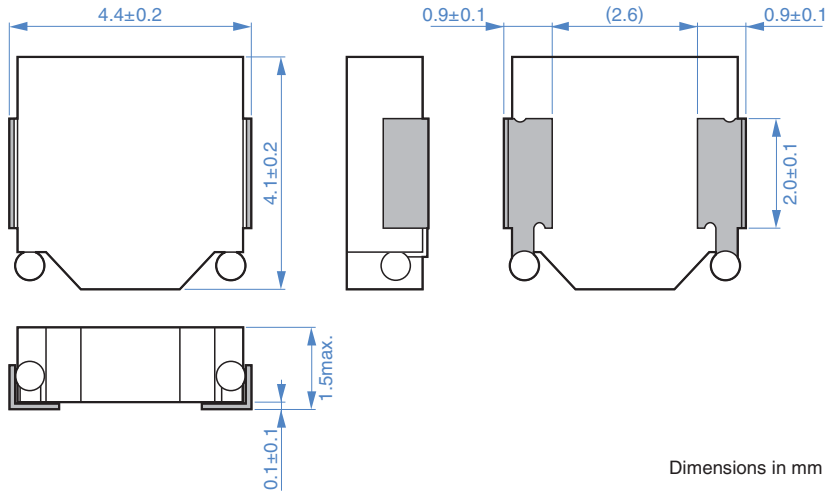

Dimensions in mm

RECOMMENDED LAND PATTERN

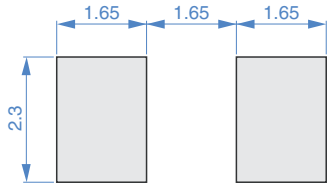

Dimensions in mm

⚠ Please be sure to request delivery specifications that provide further details on the features and specifications of the products for proper and safe use.
Please note that the contents may change without any prior notice due to reasons such as upgrading.

SPM4015 Type

■ELECTRICAL CHARACTERISTICS

□CHARACTERISTICS SPECIFICATION TABLE

L		L measuring frequency	DC resistance		Rated current*			Part No.
(μH)	Tolerance	(kHz)	(mΩ)max.	(mΩ)typ.	Idc1 (A)max.	Idc1 (A)typ.	Idc2 (A)typ.	
0.47	±20%	100	24.4	22.2	9.0	12.0	5.5	SPM4015T-R47M
1.0	±20%	100	39.6	36.0	5.5	7.4	4.3	SPM4015T-1R0M
1.5	±20%	100	56.0	51.0	4.4	5.8	3.7	SPM4015T-1R5M
2.2	±20%	100	71.0	64.5	4.1	5.5	3.1	SPM4015T-2R2M
3.3	±20%	100	128.0	116.4	2.9	3.9	2.3	SPM4015T-3R3M
4.7	±20%	100	215.9	187.7	2.5	3.3	1.8	SPM4015T-4R7M

* Rated current: smaller value of either Idc1 or Idc2.
Idc1: When based on the inductance change rate (30% below the initial value)
Idc2: When based on the temperature increase (Temperature increase of 40°C by self heating)

○ Measurement equipment

Measurement item	Product No.	Manufacturer
L	4284A	Agilent Technologies
DC resistance	AX-111A	ADEX
Rated current Idc1	4284A+42841A+42842C	Agilent Technologies

＊ Equivalent measurement equipment may be used.

⚠ Please be sure to request delivery specifications that provide further details on the features and specifications of the products for proper and safe use.
Please note that the contents may change without any prior notice due to reasons such as upgrading.

SPM4015 Type

■ELECTRICAL CHARACTERISTICS

□L FREQUENCY CHARACTERISTICS GRAPH

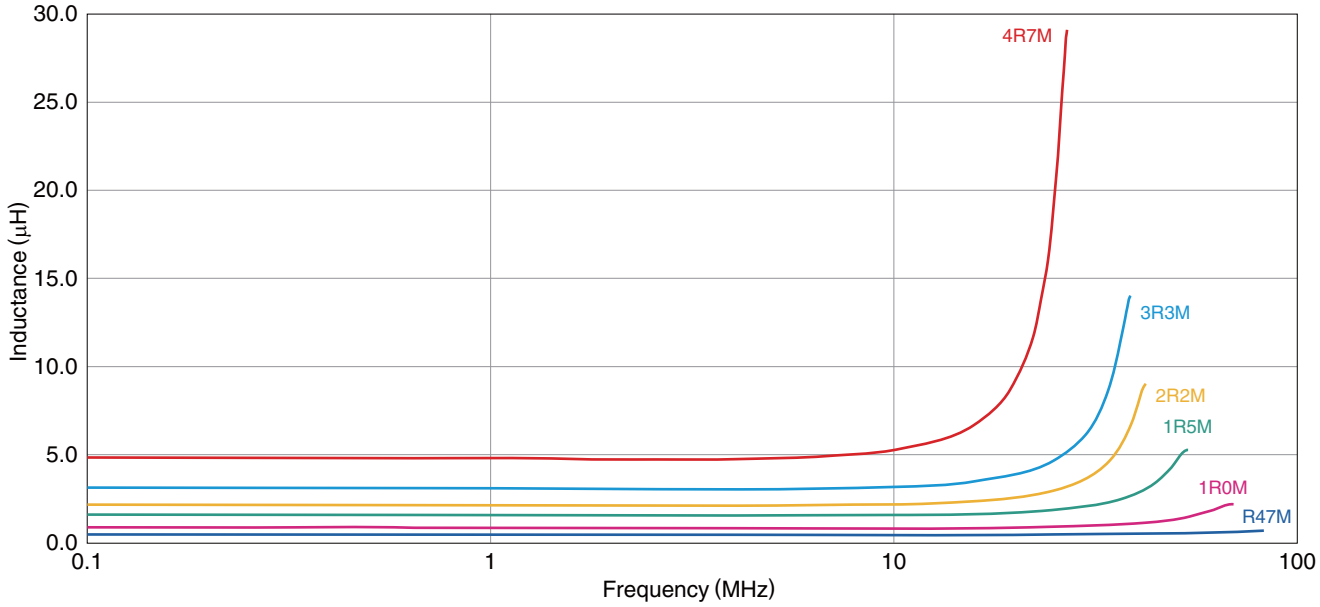

○ Measurement equipment

Product No.	Manufacturer
4294A	Agilent Technologies

＊ Equivalent measurement equipment may be used.

⚠ Please be sure to request delivery specifications that provide further details on the features and specifications of the products for proper and safe use.
Please note that the contents may change without any prior notice due to reasons such as upgrading.

SPM4015 Type

■ELECTRICAL CHARACTERISTICS

□INDUCTANCE VS. DC BIAS CHARACTERISTICS GRAPH

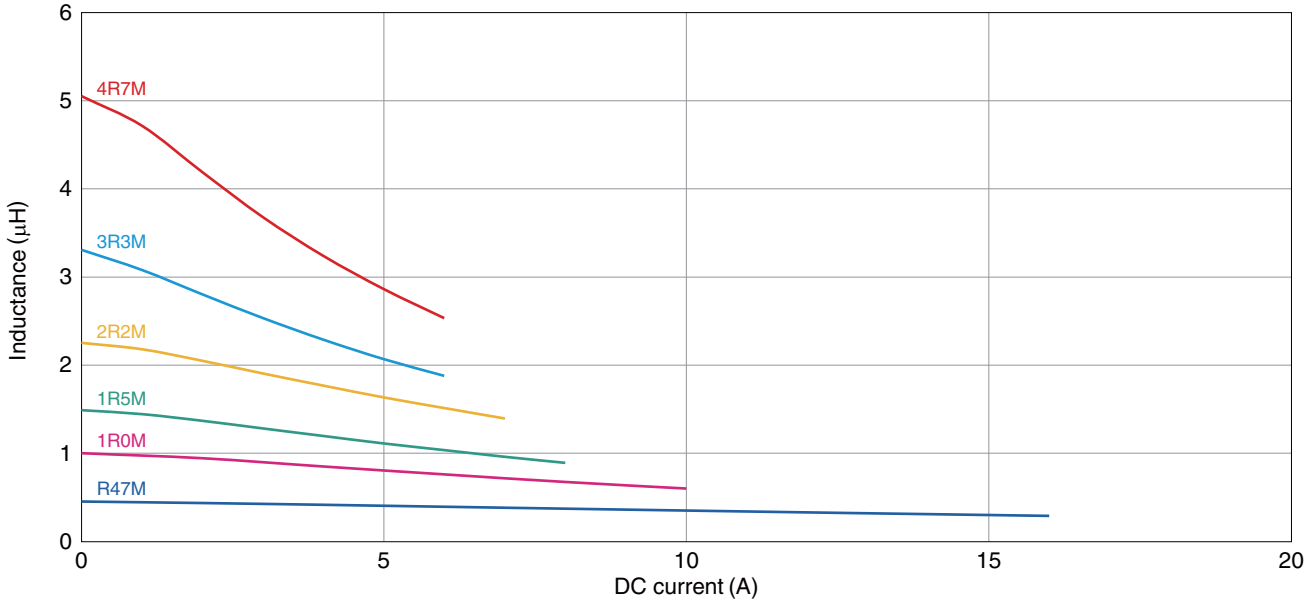

○ Measurement equipment

Product No.	Manufacturer
4284A+42841A+42842C	Agilent Technologies

＊ Equivalent measurement equipment may be used.

⚠ Please be sure to request delivery specifications that provide further details on the features and specifications of the products for proper and safe use.
Please note that the contents may change without any prior notice due to reasons such as upgrading.

SPM4015 Type

■PACKAGING STYLE

□REEL DIMENSIONS

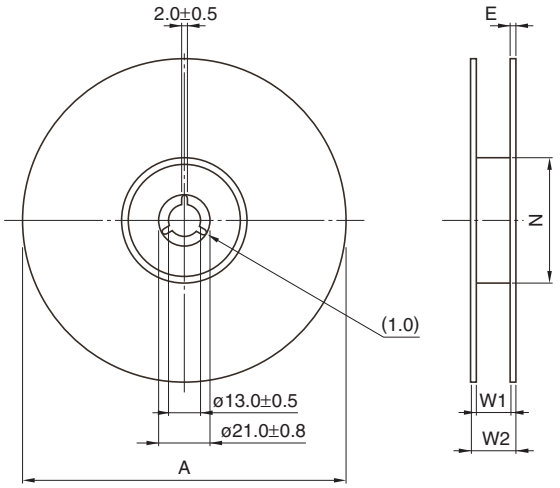

Dimensions in mm

Type	A	W1	W2	N	E
SPM4015	ø180	12.4	14.4	ø60	1.0

* These values are typical values.

□TAPE DIMENSIONS

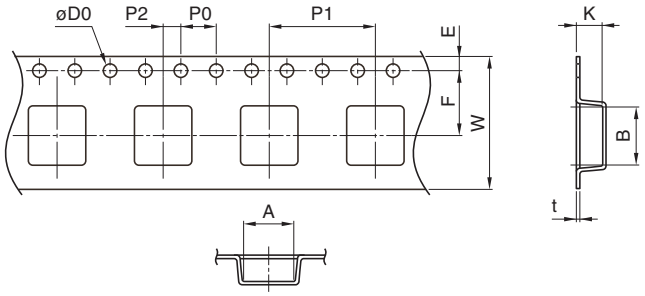

Dimensions in mm

Type	A	B	øD0	E	F	P0	P1	P2	W	K	t
SPM4015	4.35	4.65	1.5+0.1/-0	1.75±0.1	5.5±0.1	4.0±0.1	8.00±0.1	2.0±0.1	12.0±0.2	1.65	0.25

⚠ Please be sure to request delivery specifications that provide further details on the features and specifications of the products for proper and safe use.
Please note that the contents may change without any prior notice due to reasons such as upgrading.

ООО «ЛайфЭлектроникс» “LifeElectronics” LLC

ИНН 7805602321 КПП 780501001 Р/С 40702810122510004610 ФАКБ "АБСОЛЮТ БАНК" (ЗАО) в г.Санкт-Петербурге К/С 30101810900000000703 БИК 044030703

Компания «Life Electronics» занимается поставками электронных компонентов импортного и отечественного производства от производителей и со складов крупных дистрибьюторов Европы, Америки и Азии.

С конца 2013 года компания активно расширяет линейку поставок компонентов по направлению коаксиальный кабель, кварцевые генераторы и конденсаторы (керамические, пленочные, электролитические), за счёт заключения дистрибьюторских договоров

Мы предлагаем:

- *Конкурентоспособные цены и скидки постоянным клиентам.*
- *Специальные условия для постоянных клиентов.*
- *Подбор аналогов.*
- *Поставку компонентов в любых объемах, удовлетворяющих вашим потребностям.*

- *Приемлемые сроки поставки, возможна ускоренная поставка.*
- *Доставку товара в любую точку России и стран СНГ.*
- *Комплексную поставку.*
- *Работу по проектам и поставку образцов.*
- *Формирование склада под заказчика.*

- *Сертификаты соответствия на поставляемую продукцию (по желанию клиента).*
- *Тестирование поставляемой продукции.*
- *Поставку компонентов, требующих военную и космическую приемку.*
- *Входной контроль качества.*
- *Наличие сертификата ISO.*

В составе нашей компании организован Конструкторский отдел, призванный помогать разработчикам, и инженерам.

Конструкторский отдел помогает осуществить:

- *Регистрацию проекта у производителя компонентов.*
- *Техническую поддержку проекта.*
- *Защиту от снятия компонента с производства.*
- *Оценку стоимости проекта по компонентам.*
- *Изготовление тестовой платы монтаж и пусконаладочные работы.*

Тел: +7 (812) 336 43 04 (многоканальный)
Email: org@lifeelectronics.ru

www.lifeelectronics.ru